LBL-35741
UC-000

Center for Advanced Materials

CAM

Presented at the Workshop on Mechanical Properties of Protective Oxide Scales, Teddington, UK, June 20-22, 1994, and to be published in the Proceedings

Methods of Measuring Adhesion for Thermally Grown Oxide Scales

P.Y. Hou and A. Atkinson

June 1994

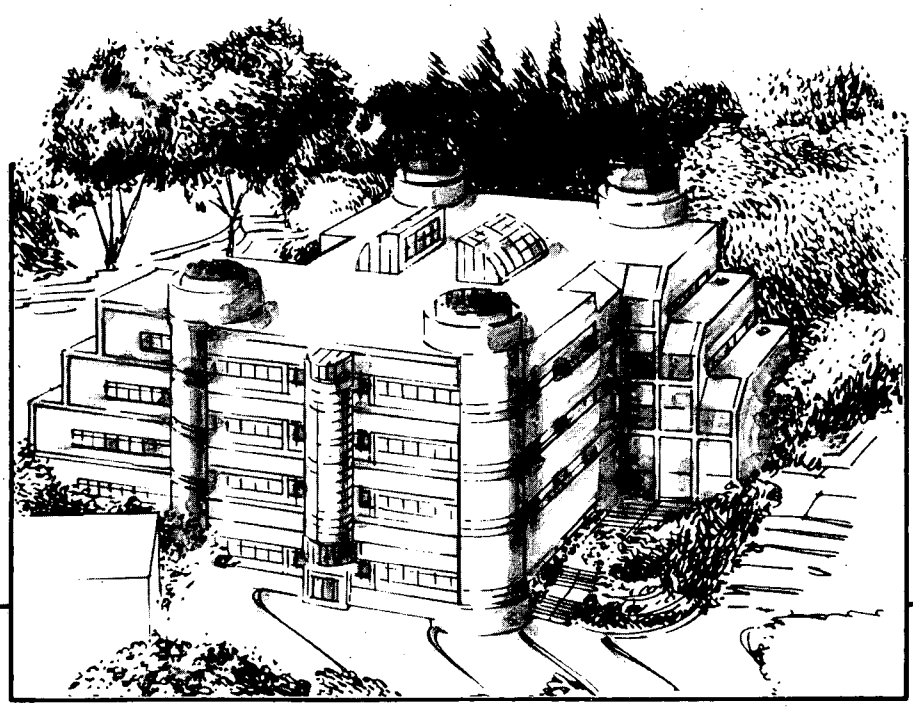

Materials and Chemical Sciences Division

Lawrence Berkeley Laboratory • University of California

ONE CYCLOTRON ROAD, BERKELEY, CA 94720 • (415) 486-4755

Prepared for the U.S. Department of Energy under Contract DE-AC03-76SF00098

REFERENCE COPY
Does Not
Circulate
Bldg. 50 Library.
LBL-35741
Copy 1

DISCLAIMER

This document was prepared as an account of work sponsored by the United States Government. While this document is believed to contain correct information, neither the United States Government nor any agency thereof, nor the Regents of the University of California, nor any of their employees, makes any warranty, express or implied, or assumes any legal responsibility for the accuracy, completeness, or usefulness of any information, apparatus, product, or process disclosed, or represents that its use would not infringe privately owned rights. Reference herein to any specific commercial product, process, or service by its trade name, trademark, manufacturer, or otherwise, does not necessarily constitute or imply its endorsement, recommendation, or favoring by the United States Government or any agency thereof, or the Regents of the University of California. The views and opinions of authors expressed herein do not necessarily state or reflect those of the United States Government or any agency thereof or the Regents of the University of California.

LBL-35741

Methods of Measuring Adhesion for Thermally Grown Oxide Scales

P. Y. Hou and A. Atkinson***

*Materials Sciences Division
Lawrence Berkeley Laboratory
Berkeley, CA 94720, USA

**Material Chemistry
AEA Technology, 429 Harwell
Oxfordshire, UK

Abstract

High temperature alloys and coatings rely on the formation of adherent scales to protect against further oxidation, but scale spallation is often problematic. Despite the technical importance of the problem, "practical adhesion", which refers to the separation of the oxide from the metal, has mainly been treated qualitatively in the past. Various techniques now exist such that the subject can be assessed in quantitative or semi-quantitative terms. Some of the techniques are described in this paper, and their weakness and strength are discussed. The experimental methods addressed here include: tensile pulling, micro-indentation, scratch test, residual stress induced delamination, laser or shock wave induced spallation, double cantilever beam and several 4-point beam bending approaches. To date, there is not an universal, easy test for oxide adhesion measurement that can provide reproducible information on interfacial fracture energy for a variety of oxide/metal systems. Much experimentation is still needed to increase confidence in many of the existing tests, and the fundamental mechanics for some present techniques also require further development.

Work supported by the Electric Power Research Institute under contract No. RP 2261-2, through an agreement with the U. S. Department of Energy under Contract No. DE-AC03-76SF00098.

Introduction

The protection of high temperature alloys and coatings against oxidation is provided by the formation of a slow-growing oxide scale. One major factor limiting the protection however, is the tendency of the oxides to crack and spall under the driving force of stresses that develop during oxide growth and thermal cycling. It is therefore of great technical importance that the scale degradation mechanism be understood, and the important factors that lead to scale failure be realized. In order to do so, it is pertinent, as a key step, to have some means of measuring the adhesion of these scales, so that the fracture resistance of the scale and the scale/alloy interface can be related to the oxide growth process.

In a formal sense, the adhesion of an oxide film to a substrate signifies the interfacial bond strength between the two phases. It depends exclusively on the interfacial properties, and is simply the summation of all interatomic interactions. This is usually being referred to as "basic adhesion"[1]. Experimentally however, adhesion is measured in terms of forces or the work required to detach or separate the adhering phases. The separation may take place at or near the interface, or within the weaker phase. This separation process can be referred to as "practical adhesion".

Basic adhesion is often expressed as the work of adhesion, W_{ad}, which is the difference in equilibrium free energies of the metal and oxide surfaces created and the oxide/metal interface destroyed: $W_{ad} = \gamma_m + \gamma_{ox} - \gamma_{oxm}$. If interfacial fracture were reversible, the energy controlling crack growth at the interface would equal the work of adhesion, but irreversible contributions are usually present. As a result, practical adhesion is usually greater than W_{ad}, and can be influenced by many factors, such as the interface morphology and adjacent microstructure, the oxide thickness or the degree of plastic deformation within the adhering phases. Since spallation is a film delamination and

cracking process driven by internal stresses, its behavior can best be described by practical adhesion measurements treated with fracture mechanics. The resistance of the interface to crack propagation, where crack extension is driven by the strain energy release rate, G, can be expressed by G_C, the fracture energy, sometimes referred to as the fracture resistance.

In recent years, a significant amount of work has been done on the fracture mechanics of thin films that are deposited on various types of substrates[2-4]. However, only limited attempts have been made to apply such knowledge and techniques to study the adhesion of thermally grown oxide films. Atkinson and Guppy[5] have recently evaluated some of the commonly used measurement methods as they applied them to study the adhesion of NiO grown on Ni and dilute Ni alloys. These include direct pulling, double beam bending, scratch test and indentation normal to the oxide surface and at the scale/metal interface. The conclusion was that none of the methods was capable of measuring the fracture resistance of the interface. In this paper, techniques that are more refined with a fracture mechanics approach are emphasized. The purpose here is to describe and discuss the advantages and limitations of techniques that have been, or may be, used for oxide adhesion measurements.

Evaluation of Experimental Techniques

PULL, SCRATCH AND INDENTATION TESTS

These tests have been evaluated by Atkinson and Guppy[5]. The methods have also been included in many of the recent review articles on film adhesion[6-10]. However, since they are often the most attractive candidates for adhesion measurement due to their ease of operation, some important specific drawbacks of each method will be discussed here.

There are several variations of the pull-off test[9]. In essence, the method involves forming a bond between a loading piece and the surface oxide, then a force is applied to pull the film off. The bonding is most conveniently achieved by applying a layer of organic adhesive, usually epoxy, and the force is most often tensile. The critical force at which the film is pulled away from its substrate is viewed as a measure of film adhesion. However, this critical force has no inherent physical meaning, because the stress state at the failure plane is not known, and the failure of the film is initiated by flaws of unknown size and location. Data are often very scattered. Furthermore, alignment of the pull test fixture is very difficult. Any misalignment will introduce shear components which will greatly affect the test result. The use of an adhesive layer also limits the maximum interfacial strength that can be obtained. If the oxide film were porous or contained through scale cracks, the adhesive may even penetrate into the interfacial area and thus affect the measurement.

In a scratch test, a small stylus is loaded normally onto the surface film, then traversed along the film surface for a certain distance. The load can either be increased stepwise with each scratch or continuously during one traverse. A critical load at which some well-defined film failure event occurs is often used as a measure of film adhesion. Film detachment can be observed by: i) acoustic emission, ii) frictional force measurement and iii) optical and scanning electron microscopy.

Because of the complexity of the stress fields associated with the scratch test, a general solution relating the critical load to scale adhesion cannot be obtained. Usually, the critical load is only used as an indication of the relative adhesive strength of the films tested. Even then, one must be certain that the same failure mode is operating, because various modes can exist depending on the load, the depth of the scratch and the mechanical properties of the film and the substrate[11]. Another complicating factor is the change in indenter

geometry with penetration depth. This is especially important when thin films are tested on soft substrates, which is often the case for oxidized samples. Other intrinsic factors, such as indenter wear and tip radius, loading rate, scratch speed etc., all have an important bearing on the value of the critical load derived from the test[12].

The indentation method involves making micro-indents from the surface of the oxide film. The indentation creates a plastically deformed zone immediately beneath the surface. Residual stresses developed in the plastic zone provide the driving force for lateral and radial cracking. If the interfacial toughness is lower than that of either the film or the substrate, lateral cracks will develop and propagate along the interface. Evans and co-workers[13-15] have developed fracture mechanics solutions which allow the interfacial fracture energy to be calculated from the size of the interfacial crack created by the indent and the indentation load. The analysis, however, limits the depth of the indent to be less than the thickness of the film. For usual oxide scales that are only a few microns thick and are too opaque to allow any direct investigation of interfacial delaminations, the analysis becomes less useful.

SPONTANEOUS SPALLATION DURING COOLING

Large residual stresses in thin films can cause spontaneous delamination. For most commercial oxide/alloy systems, the residual stress in the oxide film is compressive. Under an uniform biaxial compressive stress, spall initiation has been suggested by Evans and Lobb[16] to occur either by interfacial decohesion or by the formation of shear cracks through the oxide. By equating the stored strain energy in the oxide film to the fracture energy of the interface or the oxide, the authors developed equations which relate the temperature drop during cooling to the interfacial fracture energy. The strain energy in the oxide film is equated to thermal stresses developed during cooling on the assumption that the residual stress is predominantly a result of thermal expansion mismatch.

In the case where interfacial strength is higher than the cohesive strength of the oxide, shear cracks in the oxide will develop first. The critical condition for spallation is then the step of separating the cracked oxide from the substrate, which is given in equation (1):

$$\Delta T^2 = G_c / f t E_{ox} (\Delta\alpha)^2 (1 - \nu) \tag{1}$$

where f is the fraction of strain energy released in the fracture process, t is the oxide thickness, ΔT is the temperature change, $\Delta\alpha$ is the difference in thermal expansion coefficients of metal and oxide, E_{ox} and ν are the Young's modulus and Poisson's ratio respectively for the oxide and G_c is the interfacial fracture energy.

In equation (1), the oxide thickness can be converted to oxide weight gain. By taking $f=1$, the equation becomes a simple relationship between weight gain of the oxide, w_g, temperature change and the fracture energy:

$$w_g \Delta T^2 = k G_c \tag{2}$$

k in this case is just a constant that includes $\Delta\alpha$, E_{ox}, ν, density of the oxide and the molecular weights of the oxide and oxygen.

The initiation of oxide spall can be monitored accurately on a microbalance during cooling. An example of the critical temperature, at which spallation is initiated, as a function of gross oxide weight gain is taken from Evans[17] in Figure 1. The line drawn through the data is a best fit to the parameter $w_g \Delta T^2$. From these analyses, G_c for Cr_2O_3 scales grown on 20Cr-25Ni-Nb stabilized stainless steel was estimated to be about 6 J/m^2[17]. Thus, the method has been useful for oxides which spall spontaneously upon cooling.

The analysis is oversimplified in that it is doubtful that the shear cracks envisaged actually develop, but there is no driving force for decohesion without either such shear cracks or buckling of the oxide. Buckling and delamination can be a precursor to spalling which involves cracking of the scale. Some scales, for example low purity nickel oxide, buckle or even crack long before spallation of the cracked pieces takes place. Furthermore, the analysis oversimplified the stress state in the oxide and the transition from a through scale crack to that of interfacial decohesion. The former may differ from that calculated from thermal expansion mismatch, because of growth stress or partial relaxation through plastic deformation or limited fracture.

When the interface is the weakest part of the oxide/metal system, oxide scales will fail by interfacial decohesion accompanied by buckling. The buckling problem has been treated by Wells et al.[18] and by Evans and Hutchinson[19] as well as others[20,21]. In the analyses, the delaminated region of radius a is modeled as a clamped circular plate. The critical stress in the oxide for buckling is therefore[22]:

$$\sigma_c = [1.22E_{ox}/(1-\nu^2)](t/a)^{1/2} \tag{3}$$

Once buckling occurs, a crack driving force G, develops and is given by[19]:

$$G = (1-\nu)(1-\alpha)\sigma^2 t\{1+(\sigma_c/\sigma)^2\}/E_{ox} \tag{4}$$

where σ is the biaxial compressive stress in the oxide, and $\alpha = (1+1.207(1+\nu))^{-1}$ is a constant related to post buckling conditions. When the residual stress, σ, is greater or equal to about $3\sigma_c$, G becomes closely approximated by the asymptote:

$$G_c = (1-\nu)(1-\alpha)t\sigma^2/E_{ox} \tag{6}$$

Experiments using this analysis require the knowledge of σ at which large buckles begin to grow. Visual observation of buckling during cooling is possible for some oxide scales. The stress level will have to be estimated from thermal stress calculations, unless it can be measured during the cooling process. Preliminary analyses[23] of NiO grown on commercial grades of Ni200 at 1100°C give fracture energies between 2-4 J/m^2. These low values are believed to be associated with the high density of voids formed near the oxide/metal interface.

None of the analyses discussed so far considered the fact that film delamination always involves mixed mode loading. The phase angle of loading, i.e. the K_{II}/K_I ratio, or the relative degree of shear to tensile loading on the crack tip, increases significantly as a buckle grows[24]. When the buckled region is elongated, then for extension along the ends, the driving force is higher[24,25]. This can cause the interfacial crack to kink away from the interface into the oxide to cause spallation[24]. In addition, G_c itself is phase angle dependent; this can cause the buckle to bifurcate, i.e. to grow in an irregular geometry often involving zigzag or wormy buckles[25]. More realistic modeling which accounts for the change in phase angle and G_c with buckle growth has been undertaken[19,25], but needs to be developed further. Moreover, in any model, the stress state of the system is always going to be an important issue, and its level needs to be accurately accessed.

DOUBLE CANTILEVER BEAM TECHNIQUES

Recently, several fracture mechanics techniques have been refined for application to interfaces[26-33]. Most of them use sandwich geometries which minimize the effects of residual stresses. Nearly all are predicated on knowing the size of a well developed crack, to obtain the fracture resistance, and its dependence on crack velocity. Several of

these modifications permit determination of the fracture resistance under mixed mode loading of known degree[30-33], but none have been applied to oxide scales, for example using techniques discussed below.

The Double Cantilever Beam, DCB, technique conveniently gives nominally pure tensile (mode I) loading which is useful for evaluating the inherent toughness and impurity dependence of specific systems. Many configurations of this test are available. These are discussed in the recent review paper by Berndt and Lin[10]. Sandwich geometries having a metal layer bonded between two ceramic members, have been successfully tested in several systems using diffusion bonded samples[28-29] (see for example Figure 2a). Such geometry not only allows multiple testing on one specimen, but also makes evaluation of sub-critical crack growth relatively easy. The more compliant configurations permit assessment of the crack length from compliance measurements rather than more difficult direct observations. In order to assess the interfacial fracture resistance of thermally formed oxide scales, a second loading member using a thin organic adhesive has to be attached to the oxidized surface. Highly adherent adhesives which can be made thin to minimize the energetic contribution from plastic deformation of the adhesive are most desirable.

During a DCB test, two loading conditions, constant displacement and constant crosshead-speed, can be used to evaluate slow or fast crack growths. Under constant displacement testing, the sample is loaded to a value at which crack growth just begins. The load is then allowed to relax during crack advance. In the constant crosshead-speed test, the sample is loaded under a constant strain rate, to loads above that necessary to cause crack growth and with crack extension being revealed by nonlinearity in the load-displacement curve. In both cases, the load versus time data can be converted into a plot of crack velocity, v, versus strain energy release rate, G, using compliance relations[34]

and a computer curve-fitting routine[35]. An example is given in Figure 2b[36]. From this type of v-G plot, not only the fracture energy, G_C, can be determined from the G value at which crack growth becomes unstable, but also the effect of environment on sub-critical crack growth can be evaluated. The ability to study the environmental effect on crack growth is important in understanding oxide scale failure under different atmospheric conditions (e.g. high vs. low humidity).

Although the DCB method provides an excellent way of evaluating crack growth and its relationship to the crack extension force, the method is difficult to apply to thermally grown oxide films. One limiting factor is obviously the usage of an organic adhesive layer between the loading piece and the surface of the oxide. The strength of this layer will limit the technique to poorly adherent scales. The accuracy of the final analyses will also depend on the relative thickness of the adhesive layer to the oxide film. Thermal oxide films of commercial interest are usually only a few microns thick. The adhesive layer can easily be thicker, in which case plastic deformation within the adhesive layer will complicate the analyses considerably. Experience using the DCB technique for NiO grown on Ni[37] has also shown other experimental difficulties. One is in finding an accurate way to determine crack length, since interfacial cracks are not visible in most oxide/metal systems. Using compliance relationships to obtain crack length is in principle possible, but careful system/instrumental calibration will have to be performed first. Another alternative may be to adapt constant moment loading of the DCB[27], which reduces the need for precise crack length measurements.

FOUR-POINT FLEXURE METHODS

Several methods exist that make use of four-point bending techniques. One example is given in Figure 3a, which has been used[26,38] to study the adhesion of diffusion bonded metal/ceramic interfaces. Before loading, a fine saw cut is made at the metal/ceramic

interface. Microcracks emanating from the saw cut act as sharp starting cracks when the test bar is loaded in a four-point bending fixture. The value of G_C can be expressed[39,40] as a function of the fracture load, P_C, the sample geometry, an effective modulus of elasticity, E^* and a compliance function, Y, which is calculated from finite element analysis[41].

$$G_c = P_c^2 (9e^2 \pi Y / b^2 h^3 E^*) \tag{6}$$

b and h are the width and height of the sample respectively, e is the lateral distance between the opposite loading points and Y includes the sandwiched layer thickness, the crack length and is a function of the Dundurs parameters α and β.

The technique can be adapted for thermal oxides grown on a metallic substrate. But adhesive layers will have to be applied to attach the bending arms to the oxidized specimen. Plastic deformation from the organic adhesive layer will make the above analysis inaccurate, unless its contribution to G_C can be incorporated into the equation or shown to be small.

Atkinson and Guppy[5] have used the above method, but without a precrack, to evaluate the fracture strength of NiO/Ni interfaces. A thermosetting epoxy was used as the adhesive layer to bond the oxidized specimen to two loading arms. The thickness of the adhesive layer was controlled by inserting a thin piece of wire, 0.33 mm in diameter, into the layer. The sample is loaded under constant strain rate, until debonding occurs. Unlike the pull-test, the loading condition in this arrangement allows a useful determination of the maximum tensile stress at which failure occurs. If failure is at the oxide/metal interface, the stress level can then serve as an indication of the interfacial fracture strength. Values between 10-60 MPa were found, which depended on the oxide thickness and on the substrate composition. However, there are effects of stress concentrations from

modulus mismatch[42] and of residual stresses[43] which can affect these results.

Again, because of the presence of the adhesive layer, which in the above mentioned study[5] was hundreds of times thicker than the oxide layer, the fracture strength obtained cannot be easily identified with the true strength of the interface. The stress concentration mentioned above can be complicated by plastic deformation of the adhesive layer which can lead to a dependence on the layer thickness[42]. Furthermore, the technique is not able to provide an interfacial fracture energy, G_C, because failure is caused by internal flaws of unknown size and locations. Because of this dependence on intrinsic flaws in the oxidized sample, data usually show a high degree of scattering. However, the technique serves as a useful tool for comparing the relative strength of different interfaces.

The scale failure phenomena can also be simulated in a controlled manner by loading the oxidized sample directly in either tension or compression parallel to the scale. If the oxidized specimen is loaded in a 4-point flexural condition as illustrated in Figure 3b, both tension and compression can be simulated on the top and bottom of the same sample. Since the oxide is brittle and the substrate ductile, the substrate can be strained to obtain sufficiently high stresses in the film to satisfy crack growth conditions for any thickness of scale analogous to those in Eq.(6). Typically under tensile loading, film splitting will ensue, often in a quasi-periodic fashion. If the interface is weak and the substrate yield strength is high, delamination of the oxide will also occur. Analysis using fracture mechanics solutions then permits assessment of the fracture resistance of the scale and of the interface[44-46]. Careful microscopical examination will also reveal whether, after the scale splits, it will delaminate in an essentially brittle fashion or whether some shear occurs at or near the oxide/metal interface. If such shear occurs, then an estimate of the interfacial shear resistance can also be made[47,48].

Nagl et al.[49-50] have successfully used this technique to evaluate oxide fracture energies both at room temperature and at elevated temperatures. Although the technique is suitable in determining fracture energies of the oxide scale, especially when coupled with acoustic emission, it is limited in evaluating the fracture energies of the oxide/metal interface. This is because through thickness cracks often stop at the scale/substrate interface due to interfacial shearing[23,49], which blunts the crack at the interface and thereby suppress nucleation of an interface crack. Consequently, scale decohesion would not occur even if the interface fracture resistance were relatively low. At very high strain levels[37], scale delamination may take place eventually, but the metal substrate at this point usually suffers such high plastic deformation that presently available solutions may no longer be applicable as they ignore effects of local plasticity in the substrate.

Evans and co-workers[30] have developed an analysis that would allow G_c to be determined while following the growth of a notched pre-crack in the surface film (Figure 3c). If such a geometry can be achieved, the behavior of through thickness cracks stopping at the interface will no longer be a problem. Unfortunately, it is experimentally difficult to create such an ideal notch. For thermally grown oxide films, the task is even more challenging. Possible ways of achieving a pre-interfacial crack may be to mask parts of the oxidizing surface prior to oxidation, or to introduce a saw cut or a row of indents into the oxide layer after oxidation. Even if these methods were successful, the interfacial crack so introduced may not be sharp enough to properly propagate upon loading. Careful loading conditions will have to be found experimentally to first initiate the crack growth, then follow its advancement.

LASER AND SHOCK-WAVE SPALLATION

For the measurement of interfacial bond strength, both the laser and shock-wave methods are similar in that a compressive stress wave is generated at the back side of the

substrate. The wave propagates through the substrate in a direction normal to the substrate/coating interface. At the free surface of the coating, the compressive wave is reflected as a tensile wave incident on the interface. At the instant of this reflection, the free surface velocity increases from zero to a relatively high level (the jump-off velocity). If the tensile stress is higher than that required to break bonds at the interface, a free surface at the interfacial plane is created. The wave then can reflect from this newly created free surface and provides another velocity change of the outer free surface (the pull-back velocity).

Analyses of the process to obtain a value of the critical tensile stress at which film spallation occurs is very difficult. One method[51-52] is to model propagation of the waves through the substrate so that the stress level at the interface can be calculated. However, wave propagation in solids is a complex problem. Finite element analysis has to be employed, but the approach can lead to erroneous conclusions if the initial boundary conditions are not properly set[53]. Another method[54,55] is to determine the rupture stress by relating it to film density and the sample surface velocity:

$$\sigma = \rho_o c(u_o - u_p)/2 \tag{7}$$

where u_o and u_p are the jump-off and pull-back velocities respectively, and c is the velocity of the propagating stress wave. Nutt et al.[55] have used this method to determine bond strength. The surface velocity history was measured using laser interferometry. From their results, the value of the jump-off velocity can be easily determined, but the value for the pull-back velocity is ambiguous. This is due to strong ringing of the partially debonded film and possible inhomogeniety of the film itself.

In summary, these techniques seem promising for determining true bond strength with very limited or no crack growth, such that fracture energy obtained here will most

closely resemble W_{ad}. However, the analyses need further improvement for measurements to be reliable. Furthermore, extensive calibration is often needed in order to obtain proper wave propagation to the interface, and only flat interfaces can be studied. Thermal or mechanical properties of substrate and film can also limit the kind of system to be investigated. Experimental set-up is complicated, more so for the shock-wave than the laser method . For the laser technique, unless the film is engineered to small islands equal to the size of the laser spot, through-thickness cracking of the film has to be considered in the spallation process. The energetics of this process has not been included in any analysis.

The laser technique can be used much more easily in a semi-quantitative way. The threshold energy at which film spallation is observed can be taken as a relative measure of film adhesion[56]. Low energy laser beams can also be used as a possible tool to detect interfacial flaws[57].

Summary and Concluding Remarks

Some of the techniques that have been used to study oxide/metal adhesion, or have a potential for it, have been evaluated, and their weakness and strength discussed. Tensile pulling, scratch tests and micro-indentations are convenient and easy to perform, but are only useful for comparisons within a given system. Analysis of residual stress induced spallation can give an estimate of the interfacial fracture energy, but certain assumptions have to be made about the stress state in the scale. Laser and shock wave spallation techniques in principle are ideal in measuring interfacial bond strengths, but are very difficult to perform experimentally. Four-point bending and double cantilever beam techniques can provide accurate information on the strength or fracture resistance of the interface. However, an adhesive layer usually has to be applied between the fixture and the oxide surface. This not only complicates the analysis, but also limits the strength of

the interface that can be measured. Direct 4-point bending on oxidized specimens can provide accurate measurement of the fracture resistance of the scale, but generally tends to overestimate the fracture energy of the interface.

To date, there is not an easy test for oxide adhesion measurement that can provide reproducible information on fracture energy for a variety of oxide/metal systems. The best method for a particular oxide/metal system may need to be experimentally determined, for different oxide films fail in different ways. Furthermore, combination of a few methods may be useful, or even necessary, in order to truly understand the interfacial fracture behavior. Improved experimental methods and/or more refined fracture mechanics solutions for some present techniques are still needed. The presence of residual stresses in the oxide film and its contribution to the test results must also be taken into account in the final analysis. The ability of a technique to be performed at elevated temperatures should also be considered in its development, since scale failure actually occurs during thermal cycling at temperatures much higher than the ambient.

References

1. Mittal, K.L., Adhesion measurement: recent progress, unsolved problems, and prospects, in *Adhesion measurement of thin films, thick films and bulk coatings*, ASTM STP 640, K. L. Mittal, ed., American Society for Testing and Materials (1978) 5-17.

2. Hutchinson, J.W. and Suo, Z., Mixed mode cracking in layered materials, *Adv. Appl. Mech.*, **29** (1992) 63-191.

3. Suresh, S. and Needleman, A. (eds.), Interfacial Phenomena in Composites: Processing, Characterization, and Mechanical Properties, *Mater. Sci. Eng.* **A107** (1989).

4. Ruhle, M., Evans, A.G, Ashby, M.F. and Hirth, J.P. (eds), *Metal-Ceramic Interfaces*, Pergamon Press, Oxford, (1990).

5. Atkinson, A. and Guppy, R., Measurement of adhesion of oxides grown on nickel and nickel alloys, *Mater. Sci. and Technol.*, **7** (1991) 1031-1041.

6. Valli, J., A review of adhesion test methods for thin hard coatings, *J. Vac. Sci. Technol.* **A4** (1986) 3007-3014.

7. Rickerby, D.S., A review of the methods for the measurement of coating-substrate adhesion, *Surface and Coatings Tech.*, **36** (1988) 541-557.

8. Chalker, P.R., Bull, S.J. and Rickerby D.S., A review of the methods for the evaluation of coating-substrate adhesion, *Mater. Sci. and Eng.*, **A140** (1991) 583-592.

9. Kinbara, A. and Kondo, I., Adhesion measurement of thin metal films by scratch, peel and pull methods, *J. Adhesion Sci. Technol.*, **7** (1993) 767-782.

10. Berndt, C.C. and Lin, C.K., Measurement of adhesion for thermally sprayed materials, *J. Adhesion Sci. Technol.*, **7** (1993) 1235-1264.

11. Bull, S.J., Failure modes in scratch adhesion testing, *Surface and Coatings Tech.*, **50** (1991) 25-32.

12. Steinmann, P.A., Tardy, Y., and Hintermann, H.E., Adhesion testing by the scratch test method: the influence of intrinsic and extrinsic parameters on the critical load, *Thin Solid Films*, **154** (1987) 333-349.

13. Chiang, S.S., Marshall, D.B. and Evans, A.G., A simple method for adhesion measurements, in *Surfaces and Interfaces in Ceramic and Ceramic-Metal Systems*, J. Pask and A.G. Evans (eds.), Plenum Pub. (1981) 603-617.

14. Marshall, D.B., Lawn, B.R. and Evans, A.G., Elastic/plastic indentation damage in ceramics: the lateral crack system, *J. Am. Ceram. Soc.*, **65** (1982) 561-566.

15. Marshall, D.B. and Evans, A.G., Measurement of adherence of residually stressed thin films by indentation. I. Mechanics of interfacial delamination, *J. Apply. Phys.*, **56** (1984) 2632-2638.

16. Evans, H.E. and Lobb, R.C., Conditions for the initiation of oxide-scale cracking and spallation, *Corr. Sci.*, **24** (1984) 209-222.

17. Evans, H.E., Spallation of oxide from stainless steel AGR nuclear fuel cladding: mechanisms and consequences, *Mater. Sci. and Eng.*, **4** (1988) 415-420.

18. Wells, C.H., Follansbee, P.S. and Dils, R.R., Mechanisms of dynamic degradation of surface oxides, in *Stress Effects and the Oxidation of Metals*, J.V. Cathcart (ed.), Metallurgical Society of AIME, (1974) 220-244.

19. Evans, A.G. and Hutchinson, J.W., On the mechanics of delamination and spalling in compressed films, *Int. J. Solids Structures*, **20** (1984) 455-466.

20. Gille, G. Strength of thin films and coatings, in *"Mechanical Properties of Brittle Materials: Modern Theories and Experimental Evidence,"* Akademie der Wissenschaften der DDR, Dresden, DDR (1986) 267-325.

21. Argon, A.S., Gupta, V., Landis H.S. and Cornie, J.A., Intrinsic toughness of interfaces, *Mater. Sci. Eng.* **A108** (1989) 41-47.

22. Timoshenko, S. and Gere, J.M., *Theory of Elastic Stability*, 2nd Edn. McGraw Hill, New York (1961).

23. Hou, P.Y., Lawrence Berkeley Laboratory, unpublished data (1994).

24. Thouless, M.D., Fracture of a model interface under mixed-mode loading, *Acta Metall. Mater.*, **38** (1990) 1135-40.

25. Hutchinson, J.W., Thouless M.D. and Liniger E.G., Growth and configurational stability of circular, buckling-driven film delamination, *Acta metall.*, **40** (1992) 295-308.

26. Pabst, R.F. and Elssner, G., Adherence properties of metal-to-ceramic joints, *J. Mat. Sci.* **15** (1980) 188-196.

27. Mecholsky, J.J., A Chevron-notched specimen for fracture toughness measurements of ceramic-metal interfaces, ASTM STP, **855** 1985) 324-326.

28. Oh, T.S., Cannon, R.M. and Ritchie, R.O., Subcritical crack growth along ceramic-metal interfaces, *J. Am. Ceram. Soc.*, **70** (1987) C352-355.

29. Cannon, R.M., Dalgleish, B.J., Dauskardt, Oh, T.S. and Ritchie, R.O., Cyclic fatique crack propagation along ceramic/metal interfaces, *Acta. Metall. Mater.* **39** (1991) 2145-2156.

30. Charalambides, P.G.,Lund, J.,Evans, A.G. and McMeeking, R.M.,A test specimen for determining the fracture resistance of bimaterial interfaces, *J. Appl. Mech*, **56** (1989) 77-82.

31. Wang, J.S. and Suo Z., Experimental determination of interfacial toughness curves using Brazil-nut sandwiches, *Acta Metall. Mater.* **38** (1990) 1279-1290.

32. Liechti, K.M. and Chai, Y.-S.,Biaxial loading experiments for determining interfacial fracture toughness, *J. Appl. Mech.* **58** (1991) 680-687.

33. O'Dowd, N.P.,Shih, C.F. and Stout, M.G.,Test geometries for measuring interfacial fracture toughness, *Ins. J. Solids and Sturct.* **29** (1992) 571-579.

34. Cannon, R.M., Lawrence Berkeley Laboratory, unpublished work (1992).

35. Card, J.M., Mechanisms for stress-corrosion crack growth along ceramic-metal interfaces, Masters Thesis, University of California, Berkeley, 1993.

36. Card, J.C., Cannon, R.M., Dauskardt, R.H. and Ritchie, R.O., Stress-corrosion cracking at ceramic-metal interfaces, *Mat. Res. Symp. Proc.* **314** (1993) 109-116.

37. Hou, P.Y. and Cannon, R.M., Unpublished results, Lawrence Berkeley Laboratory (1994).

38. Korn, D. Elssner, G., Fischmeister, H.F. and Ruhle, M., Influence of interface impurities on the fracture energy of UHV bonded niobium-sapphire bicrystals, *Acta. metall. mater.* **40** Suppl. (1992) S335-S360.

39. Suga, T. and Elssner, G., Determination of the fracture energy and the fracture resistance of interfaces, *J. de Physique* **C4** (1985) 657-663.

40. Suga, T., Elssner, G. and Schmauder S., Composite parameters and mechanical compatibility of material joints, *J. Compos. Mater.* **22** (1988) 917-934.

41. Gibbesch, B., Untersuchungen von ultrahochvakuumverschweissten metall-kermic-verbindungen, Ph.D. Thesis, Stuttgart (1990).

42. Dalgleish, B.J.,Lu, M.C. and Evans, A.G.,The study of ceramics bonded with metals, *Acta Metall. Mater.* **36** (1988) 2029-2035.

43. Cao, N.C.,Thouless, M.D. and Evans, A.G.,Residual stresses and cracking in brittle solids bonded with a thin ductile layer, *Acta Metall. Mater.* **36** (1988) 2037-2046.

44. Cannon, R.M.,Fisher, R.M. and Evans, A.G.,Decohesion of thin films from ceramic substrates, *Proc. Mat. Res. Soc. Symp.*, **54** (1986) 799-804.

45. Hu, M.S. and Evans, A.G., The cracking and decohesion of thin films on ductile substrate, *Acta Metal.* **37** (1989) 917-925.

46. Thouless, M.D., Olsson, E. and Gupta A., Cracking of brittle films on elastic substrates, *Acta Metall. Mater.*, **40** (1992) 1287-1292.

47. Agrawal, D.C. and Raj, R., Measurement of the ultimate shear strength of a ceramic-metal interface, *Acta Metall.* **37** (1989) 1265-1270.

48. Shieu, F.S., Raj, R. and Sass, S.L., Control of the mechanical properties of ceramic-metal interfaces through interfacial reactions," *Acta Metall. Mater.* **38** (1990) 2215-2224.

49. Nagl, M.M.,Hall, D.J. and Evans, W.T.,Tensile cracking behavior of oxide scales, *Corr. Sci.* **35** (1993) 965-977.

50. Nagl, M.M.,Evans, W.T.,Hall, D.J. and Saunders, S.R.J.,The failure of iron oxide at growth temperature under tensile stress, *J. de Physique* **C9** (1993) 933-942.

51. Snowden, W.E. and Aksay, I.A.,Measurement of thick film adhesion by an impact separation technique, *Mater. Sci. Res.*, **14** (1981) 651-660.

52. Gupta V., Argon, A.S., Cornie, J.A. and Parks, D.M., Measurement of interface strength by laser-pulse-induced spallation, *Mater. Sci. and Eng.*, **A126** (1990) 105-117.

53. Nutt, G.L. and King W.E.,Comments on the bond strength measurements of Gupta and co-workers, *Mater. Sci. and Eng.*, **A159** (1992) 135-142.

54. Novikov, S.A. and Chernov, A.V., Determination of the spall strength from measured values of the specimen free-surface velocity, *J. Appl. Mech. Tech. Phys.*, **5** (1982) 703-705.

55. Nutt, G.L., Lai, W., Froeschner, K.E. and King, W.E., Direct measurement of interface bond strengths, in M. Ruhle, A.G. Evans, M.F. Ashby and J.P. Hirth (eds.), *Metal-Ceramic Interfaces*, Acta-Scripta Metallurgica, (1989) 307-312.

56. Vossen, J.L., Measurements of film-substrate bond strength by laser spallation, in *Adhesion Measurement of Thin Films, Thick Films and Bulk Coatings*, ASTM STP 640, Mittal, K.L. ed., American Society for Testing and Materials, (1978) 122-133.

57. Loh, R.L., Rossington, C. and Evans, A.G., Laser Technique for Evaluating Spall Resistance of Brittle Coatings, *J. Am. Cerem. Soc.*, **69** (1986) 139-142.

Acknowledgement

The authors wish to thank Dr. Rowland Cannon for his valuable comments on the subject area and for critical reading of this manuscript. This work was supported by the Electric Power Institute under contract No. RP 2261-2, through an agreement with the U. S. Department of Energy under Contract No. DE-AC03-76SF00098.

Figure Captions

Figure 1: Variation of the critical temperature amplitude (the temperature drop at which spallation is initiated) as a function of total oxide weight gain from oxidation at 1123K. Different symbols represent different specimen geometries and coolants. (After Ref. 17)

Figure 2: (a) Schematic illustration of a double cantilever beam (DCB) sample where a thin strip of metal is bonded between two ceramic pieces with a precrack of length *a*. (b) An example of typical test results obtained from the DCB method on ceramic-metal sandwich specimens. (After Ref. 36)

Figure 3: Schematic illustration of various four-point bending methods. (a) A sandwich specimen with a precrack introduced at the metal/ceramic interface. (b)

Direct bending of a sample with a thin film of oxide on the surface of a thicker substrate. (c) A notched bimaterial specimen with a symmetrical interfacial crack of length $2a$.

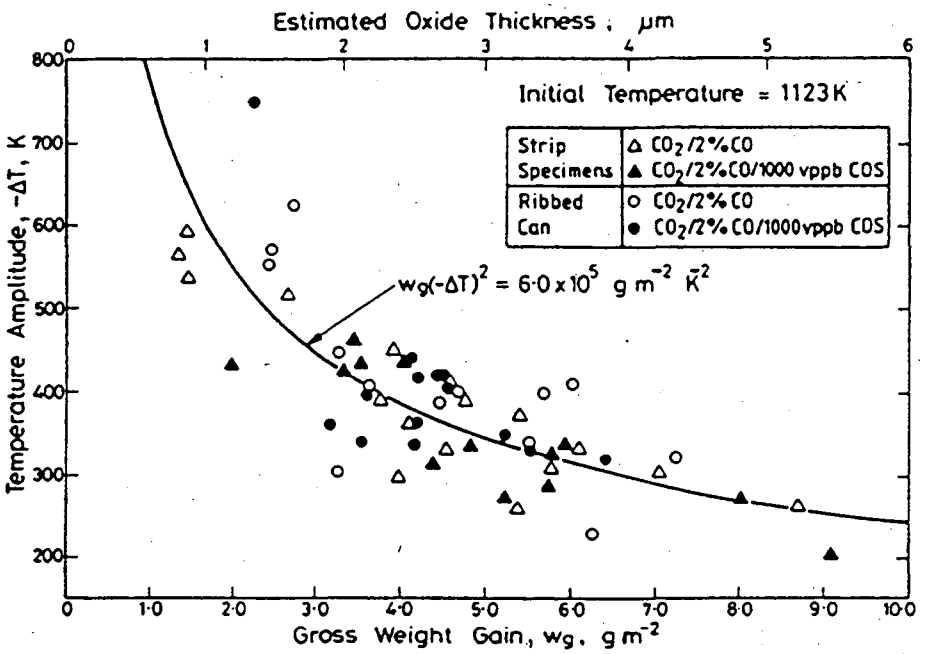
Estimated Oxide Thickness, μm
Initial Temperature = 1123 K
Strip Specimens
△ CO2/2%CO
▲ CO2/2%CO/1000 vppb COS
Ribbed Can
○ CO2/2%CO
● CO2/2%CO/1000vppb COS
wg(-ΔT)² = 6·0 x 10⁵ g m⁻² K²
Temperature Amplitude, -ΔT, K
Gross Weight Gain, wg, g m⁻²

Figure 1

(a)

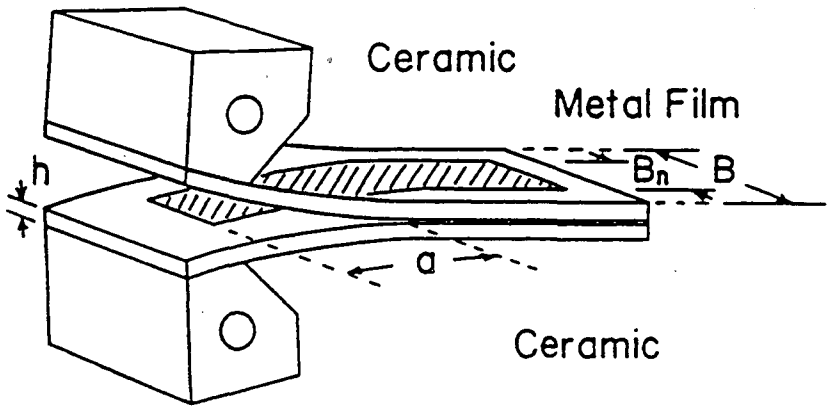

$$G = \frac{12(Pa)^2}{Eh^3 B B_n}\left[1 + \frac{2}{3}\frac{h}{a}\right]^2$$

(b)

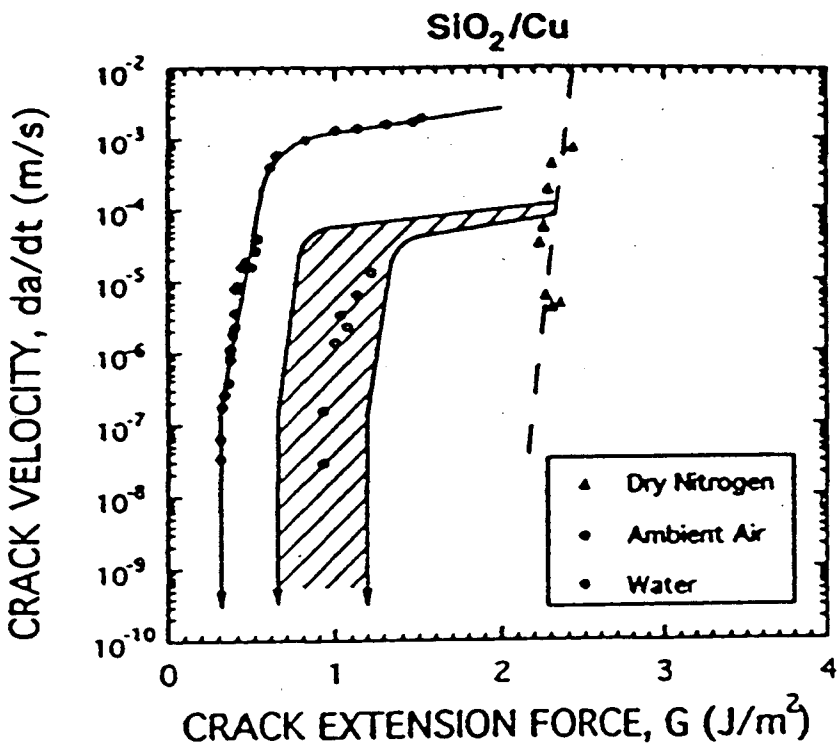

Figure 2

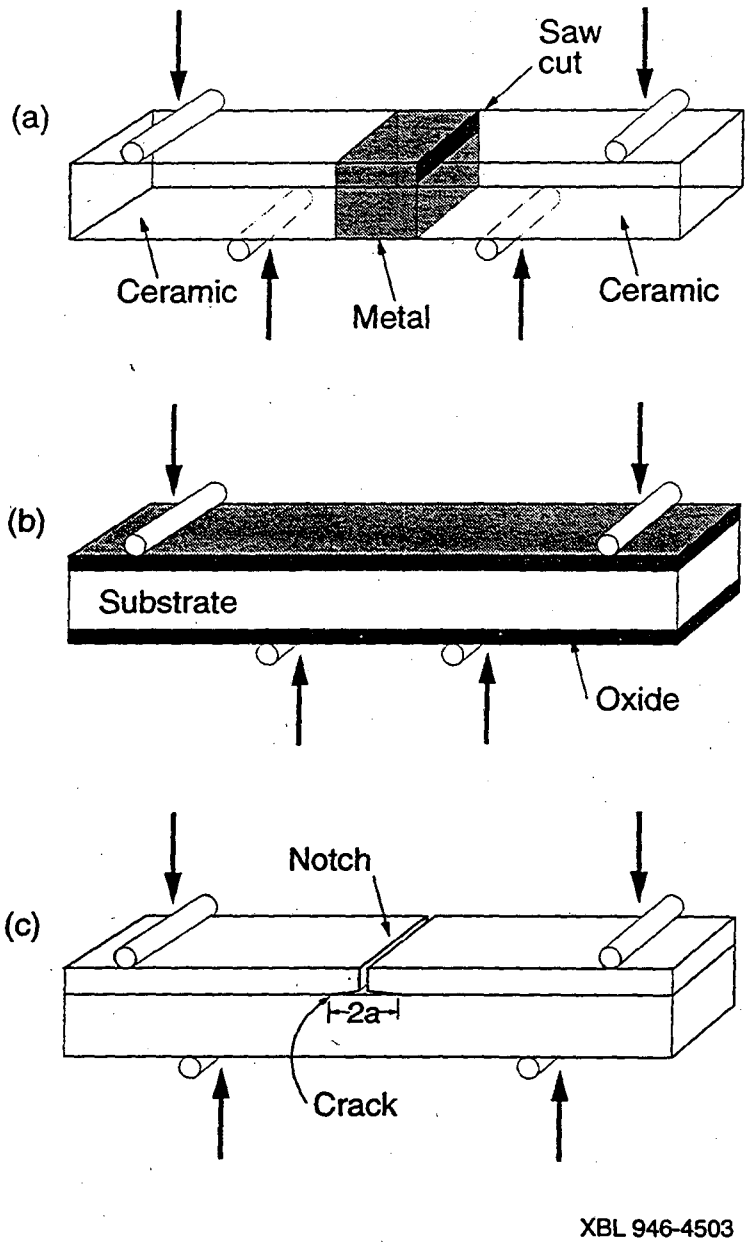
(a)
Saw cut
Ceramic
Metal
Ceramic
(b)
Substrate
Oxide
(c)
Notch
2a
Crack
XBL 946-4503

Figure 3

LAWRENCE BERKELEY LABORATORY
CENTER FOR ADVANCED MATERIALS
1 CYCLOTRON ROAD
BERKELEY, CALIFORNIA 94720