ERNEST ORLANDO LAWRENCE
BERKELEY NATIONAL LABORATORY

An ontology to represent energy-related occupant behavior in buildings. Part II: Implementation of the DNAS framework using an XML schema

Tianzhen Hong, Simona D'Oca, Sarah Taylor-Lange, William J.N. Turner, Yixing Chen, Stefano Corgnati

Energy Technologies Area

August,2015

Building and Environment 94 (2015) 196–205

Contents lists available at ScienceDirect

Building and Environment

journal homepage: www.elsevier.com/locate/buildenv

An ontology to represent energy-related occupant behavior in buildings. Part II: Implementation of the DNAS framework using an XML schema

Tianzhen Hong [a, *], Simona D'Oca [a, b], Sarah C. Taylor-Lange [a], William J.N. Turner [a, c], Yixing Chen [a], Stefano P. Corgnati [b]

[a] Lawrence Berkeley National Laboratory, 1 Cyclotron Road, Berkeley, CA 94720, USA
[b] Polytechnic of Turin, Energy Department, Technology Energy Building Environment, Italy
[c] University College Dublin, Electricity Research Centre, Belfield Campus, Dublin, Ireland

ARTICLE INFO

Article history:
Received 4 June 2015
Received in revised form
28 July 2015
Accepted 11 August 2015
Available online 13 August 2015

Keywords:
Occupant behavior
Building simulation
Energy modeling
XML schema
Building energy consumption
obXML

ABSTRACT

Energy-related occupant behavior in buildings is difficult to define and quantify, yet critical to our understanding of total building energy consumption. Part I of this two-part paper introduced the DNAS (Drivers, Needs, Actions and Systems) framework, to standardize the description of energy-related occupant behavior in buildings. Part II of this paper implements the DNAS framework into an XML (eXtensible Markup Language) schema, titled 'occupant behavior XML' (obXML). The obXML schema is used for the practical implementation of the DNAS framework into building simulation tools. The topology of the DNAS framework implemented in the obXML schema has a main root element *OccupantBehavior*, linking three main elements representing *Buildings*, *Occupants* and *Behaviors*. Using the schema structure, the actions of turning on an air conditioner and closing blinds provide two examples of how the schema standardizes these actions using XML. The obXML schema has inherent flexibility to represent numerous, diverse and complex types of occupant behaviors in buildings, and it can also be expanded to encompass new types of behaviors. The implementation of the DNAS framework into the obXML schema will facilitate the development of occupant information modeling (OIM) by providing interoperability between occupant behavior models and building energy modeling programs.

© 2015 Elsevier Ltd. All rights reserved.

1. Introduction

Based on a comprehensive review of 130 published academic papers, Part I of this paper introduced the DNAS (Drivers, Needs, Actions, Systems) framework intended to formalize the modeling of energy-related occupant behavior (OB) in buildings [1]. The DNAS framework was developed to help fully understand and capture the principal aspects of energy-related human interactions within buildings [2]. In this context, studies conducted by the US Environmental Protection Agency [3] and the European Commission [4], highlighted that Americans and Europeans spend on average 85%–90% of their time in indoor environments. However, building occupants are not passive receptors to their indoor environment. Instead, occupants interact with building systems to bring about desired thermal, visual, and acoustic comfort and good indoor air quality (IAQ). These interactions are typically grounded in the Humphreys' principle of adaptation, which states: "if a change occurs such as to provide discomfort, people react in ways which tend to restore their comfort" [5]. As stated by Parson [6], occupants acclimatize to their environment through three main adaptive responses: physiological, psychological and behavioral. A physiological response is any type of unconscious reaction which allows the human body to adapt thermally to the indoor environment. In a cold environment the human body reacts by vasoconstriction to reduce blood flow to the skin, limiting heat dissipation. Shivering is an involuntary bodily reaction that forces the muscles to increase their heat production by a factor of 10. In a warm environment, the human body reacts by vasodilation to increase blood flow to the skin and increase heat dissipation. A psychological response is any type of individual reaction to the indoor environment due to discomfort, strain, pressure, motivation or adaptation to the environment. This reaction may vary based upon the habits and

* Corresponding author.
E-mail address: thong@lbl.gov (T. Hong).

http://dx.doi.org/10.1016/j.buildenv.2015.08.006
0360-1323/© 2015 Elsevier Ltd. All rights reserved.

expectations of the individual. A psychological response involves the cognitive and cultural variables of each individual with respect to their perception of the indoor environment. A psychological response may evoke many different behaviors in response to possible sources of stress causing discomfort. A behavioral response is any type of action performed to maintain or restore a state of comfort when the indoor environmental conditions cause discomfort. In everyday practice, and often without fully considering the consequences, occupants interact with the building systems in their homes and workplaces in order to achieve desired environmental conditions. In this context, this paper focuses on behavioral comfort-driven responses of occupants within the built environment.

Energy-related OB in buildings includes actions such as turning on/off local HVAC (Heating, Ventilation, and Air-Conditioning) equipment, opening and closing windows for thermal comfort and ventilation, turning on/off or dimming lights, using shades and blinds to prevent glare or excessive solar heat gains, adjusting thermostat settings, using fans, moving to warmer/cooler spaces, etc. Historically, the human-building interaction has been modeled based on limited evidence from field studies. Existing models typically include assumptions on OB in buildings based on generic input data. Commonly, OB models used in building simulation are formed under the assumption that occupants behave in a set way according to standard deterministic design conditions such as occupancy levels, ventilation rates, thermostat set points and other threshold values. The inclusion of the adaptive comfort model [7] into European (EN 15251 [8]) and U.S. standards (ASHRAE 55 [9]) has promoted interest in: (1) the prediction of OB actions performed by individuals to restore their personal comfort, and (2) the quantification of the energy impact of OB to understand the factors driving the difference between predicted and actual building energy use. Of particular importance are the actions of turning on/off HVAC equipment, adjusting thermostats, lights, windows and blinds, and moving into/out of spaces. Over the past 30 years, building-occupant interaction models have been developed to describe human behavior in a need-action-event cognitive process and have been the focus of investigation for a substantial body of scientific research [7,10]. Recent efforts have been made within the framework of the International Energy Agency (IEA) Energy in Buildings and Communities Programme (EBC) Annex 53 to categorize the most relevant types of energy-related OB for residential buildings [10]. A dedicated section of Annex 53 focuses on OB modeling, exploring existing theories on OB and behavioral models, and providing a comprehensive literature review of the influencing parameters (referred to as 'driving forces') for the various types of energy-related OB.

The most significant conclusion drawn from the literature review in Part I of this paper was the lack of a standardized method or technical structure for describing energy-related OB in buildings and for reporting modeling results. Authors using different variables, instances, and metrics introduce climatic, contextual and cultural differences in their results. For example, Mahdavi and Proglhof [11] and Karjalainen [12] suggested the important factors that affect occupants' behavior in manual shade operation were indoor temperature, transmitted solar radiation, and window luminance. Independent of Karjalainen [12], Mahdavi and Proglhof [11] found workplane illuminance and the geometry of the transmitted solar radiation were also important factors. In agreement with Mahdavi and Proglhof [11], Nicol and Humphreys [13] found workplane illuminance and the geometry of transmitted solar radiation were important drivers, but neglected to consider indoor temperature, transmitted solar radiation, and window luminance. Similarly, Turner and Hong [14] showed that different authors listed indoor air temperature [15] or outdoor air temperature [16] to be the primary driver for window-opening actions. From these examples, the selection of different drivers for similar occupant behavior models makes it difficult to compare the models and incorporate them into building energy modeling (BEM) programs. In order to bridge this classification gap, an ontology was developed to describe the main behavioral adaptation mechanisms. This ontology was used to formulate the DNAS framework described in Part I and provides the foundation for the obXML schema presented here in Part II. The obXML schema allows relationships to be formed/defined between different drivers and the eventual action, in a standardized way. obXML is designed to provide enough flexibility for both existing and future occupant behavior, building energy and system models to be captured in a consistent way. The obXML schema follows extensible design criteria to provide a wide range of stakeholders (researchers, designers, energy modelers, building engineers etc.) with a new tool to standardize the representation of energy-related occupant behavior in buildings, and quantify the impact on building operations, technology and system performance, as well as design and retrofit strategies.

1.1. XML – eXtensible Markup Language

A number of data formats were considered for the implementation of the DNAS framework in a schema. The two main viable candidates that emerged were JSON (JavaScript Object Notation) and XML (eXtensible Markup Language). JSON documents are widely used for targeting web browser display applications using Java and JavaScript code. An XML document is a machine- and human-readable document used to provide a convenient and simple way of storing and transferring data between applications and software tools. An XML schema provides a platform to facilitate and standardize the sharing, storage and management of data, especially when data is collected from heterogeneous sources. A schema describes the data content, format and structure of an XML document. For example, the Green Building XML schema (or gbXML) [17], was developed to facilitate the transfer of building information stored in CAD building information models, enabling integrated interoperability between building design models and a wide variety of engineering analysis tools and models. The ifcXML schema, developed by buildingSMART [18], is derived from the Industry Foundation Classes (IFC) EXPRESS model. ifcXML is a neutral, open, and object-based data format intended to facilitate interoperability in the architecture, engineering and construction industries. IFC is also commonly used in a collaborative format within Building Information Modeling (BIM) based projects, and its model specification is described by the International Standard ISO 16739:2013 [19].

Researchers in fields external to building engineering have also adopted XML standards. For example, Babaie and Babaei [20] focused on modeling geological objects and earthquakes using logical models of seismology and plate tectonics. Zheng et al. [21] developed an XML schema that focused on large-scale proteomics studies in the field of functional genomics. Yan et al. [22] used a framework based on XML for standardizing and optimizing marine metadata. For each of the above studies the overall objective was to use XML to provide a standardized language that would reduce data redundancy, increase efficiency and simplify data management.

1.2. Occupant behavior modeling

The XML language was chosen because of its ability to provide an automated mechanism which can capture the data syntax and structure needed to represent the DNAS framework in the form of an interoperable language for energy-related OB in buildings. Part II

of this paper focuses on the creation of an XML schema, called obXML, used to describe the data content and structure of the DNAS ontology while providing a standardized representation of energy-related OB in buildings. The obXML schema is intended to be integrated into current building energy modeling (BEM) programs or Functional Mock-up Units (FMUs), to support both model exchange and co-simulation of OB models.

Currently, a realistic description of occupants' adaptive responses is a significant factor hindering accurate simulation predictions of real building energy consumption. When used in whole-building energy simulation obXML will help to eliminate model and data ambiguity and narrow the gap between the simulated and actual energy consumption of buildings. The implementation of the obXML schema into an FMU (which enable co-simulation environments) via a Functional Mockup Interface (FMI) [23] such as Modelica [24], will allow simultaneous simulations with current BEM programs to be performed. FMI is a tool-independent interface standard intended to support both model exchange and co-simulation of two or more dynamic models. FMI uses a combination of XML files, C-header files, and C-code in source or binary form [25]. A simulation model or program which implements the FMI standard is called an FMU. An FMU comes along with a small set of easy-to-use C-functions (FMIfunctions) whose input and return arguments are defined by the FMI standard. The co-simulation of energy-related OB through more dedicated simulation engines will help to identify design shortcomings and improve building performance predictions during both the building design and operation phases.

The integration of human behavior simulation with BIM is one way to bridge the gap between predicted and actual building energy consumption [26]. However, there has been little effort exerted to establish such integration. BIM is defined by the United States National BIM Standard as “a digital representation of physical and functional characteristics of a facility” [27]. BIM, an intelligent model-based process, provides interoperability and information exchange during the whole-building life cycle. BIM involves the generation and management of digital representations of the physical characteristics of buildings as well as the technical and functional properties of building envelopes, systems, controls and technologies. Building data are drawn into transferable formats which allow and support information exchange and networking among different stakeholders who plan, design, construct, operate and maintain buildings. With constant access to building data streams, BIM could provide a core for building OB models, supporting a new generation of Occupant Information Modeling (OIM) that will enable the simulation of tailored scenarios of occupant operation and management for specific building cases.

In the long term, the obXML schema is aimed to facilitate the development of OIM, a future key component of BIM. In this regard, an online repository has been created at the web address behavior.lbl.gov where the obXML schema may be downloaded for practical use. The intention of this publication is not to present a manual of the schema but rather introduce version 1.0 of the obXML schema to the scientific community and justify its creation based on technical merit. The development of the obXML schema will be an ongoing process with future versions to be made freely and publically available.

2. Implementing the DNAS framework into a schema

2.1. Categorizing occupant behaviors using the DNAS framework

Findings from the literature review in Part I of this paper [1] were used to develop the obXML schema using XMLSpy [28]. The topology of the schema follows the DNAS framework, with each adaptation mechanism described using the four key components: drivers, needs, actions and systems. *Drivers* represent the environmental factors that stimulate occupants to fulfill a physical, physiological or psychological need. *Needs* represent the physical and non-physical requirements of the occupant that must be met in order to ensure satisfaction with their environment. *Actions* are the interactions with systems or activities that occupants can perform to achieve environmental comfort. *Systems* refer to the equipment or mechanisms within the building with which occupants may interact to restore or maintain environmental comfort. Table 1 shows six examples of energy-related occupant behavior from the literature, and how the behaviors are described within the context of the DNAS ontology.

2.2. Implementing the DNAS framework into the obXML schema

The topology of the DNAS framework was implemented in the obXML schema based on a main root element *OccupantBehavior* branching into five sub-elements *Behaviors*, *Buildings, Occupants*, *Seasons*, and *TimeofDay* (Fig. 1). The *OccupantBehavior* root element has an ID and version attribute, indicating a unique ID and version. The sub-elements from the main element provide a choice for specific building, occupant, behavior, season and time of day inputs, with seasonal and time of day information being optional.

The *Buildings* element (Fig. 2) pertains specifically to the inputs related to occupant behaviors in the building. It has a unique ID attribute, and required *Type* and *Spaces* children elements. The *Type* element contains 39 enumeration building types, consistent with those commonly used in BIM schemas (such as gbXML). The *Building* element has optional children elements of *Address* and *Description* to be input as a string. The *Spaces* element allows for an infinite number of building spaces to be defined. Each *Space* element includes a unique attribute ID, and the required child elements of *Type* (MeetingRoom, Corridor, Outdoor, Office, ResidentialOwn, ResidentialRent, OfficeShared, OfficePrivate, Other) and *GroupPriority* (Majority). In addition, description, maximum or minimum number of occupants within the space and meeting information are optional inputs. If the space is communal, the *Meeting* element contains child elements describing the *Duration*, *StartTime*, *EndTime*, and the *Probability* of the meeting occurring. The *Building* parent element hosts the *Systems* child element, describing the physical equipment or components with which an occupant may interact. The child elements of the *Systems* element include the *Window*, *Shade*, *Light*, *Thermostat*, *Equipment*, and *HVAC* control, each with a unique ID attribute, an optional *Description* element, and an enumeration selection for the *Type* of control: window – operable or fixed; shade – operable or fixed; light – on/off, dimmable, two step, three step; thermostat – adjustable, none, fixed; HVAC system – central, zonal controllable, zonal fixed.

The *Occupants* root element (Fig. 3) describes the occupants within the building. Each parent *Occupant* element has a unique attribute ID and optional child elements of *Name*, *Age*, *Gender*, *Lifestyle*, *Jobtype*. A behavior ID referencing the *Behaviors* root element tags an occupant to a specific behavioral action.

The topology of the schema for the *Behaviors* root element branches into *Drivers*, *Needs*, *Actions* and *Systems* child elements, following the DNAS framework (Fig. 4).

The *Drivers* element has six child elements, namely (1) *Time*, (2) *Environment*, (3) *EventType*, (4) *Habit*, (5) *Spatial* and (6) *OtherConstraint* (Fig. 5). The *Time* child element includes the *Time of Day* (morning, noon, evening etc …), *Day of Week Type* (Monday, Tuesday, Wednesday etc …), and *Season Type* (spring, summer, fall etc …). The *Environment* child element *Parameter* includes the four sub-elements *Name*, *Description*, *Type*, *Unit* and an attribute ID. The *Type* element includes 30 different enumerations within the

Table 1
Six examples of energy-related occupant behavior from the literature, and how the behaviors are described within the context of the DNAS ontology.

Behavior	Drivers	Needs	Actions	System	Reference
Window opening	IAQ	IAQ comfort	Open window	Window	[29–32]
Shade control	Work-plane illuminance	Visual comfort	Operate blinds	Blinds	[33–36]
Lighting control	Work-plane illuminance	Visual comfort	Turn on lights	Lights	[37,38]
Thermostat control	Indoor temperature	Thermal comfort	Adjust setpoint	HVAC	[39]
Electric equipment usage	Organizational policy	Culture to save energy	Turn off computer	Plug loads (computer)	[40–43]
Space occupancy	Daily routine	Food	Break for lunch	Building space	[44]

general categories of temperature, IAQ, daylight factor, illuminance, glare, relative humidity, solar irradiance, raining and noise. These enumerations are separated according to indoor or outdoor applications. Each *Type* has a unique attribute ID and associated unit. The *EventType* child element details the circumstances that may be driving occupant actions such as waking up, sleeping, leaving for work or returning from lunch. The *Habits* child element lists personal enumeration traits such as smoking. The *Spatial* child element has the sub-child element *SpaceType* (residential, office; owned, rented) and a space reference ID referencing the *Space* child element defined under the parent *Building* element. Lastly, *OtherConstraints* includes the option of signifying that there are no occupants in the room.

The *Needs* are categorized into *Physical* and *Non-physical* child elements (Fig. 6). The *Physical* needs are comprised of the 4 child elements *Thermal*, *Acoustic*, *Visual* and *IAQ*. Each child element in the *Physical* category references a unique *ParameterRange* signifying an acceptable input comfort range with a unique ID, and

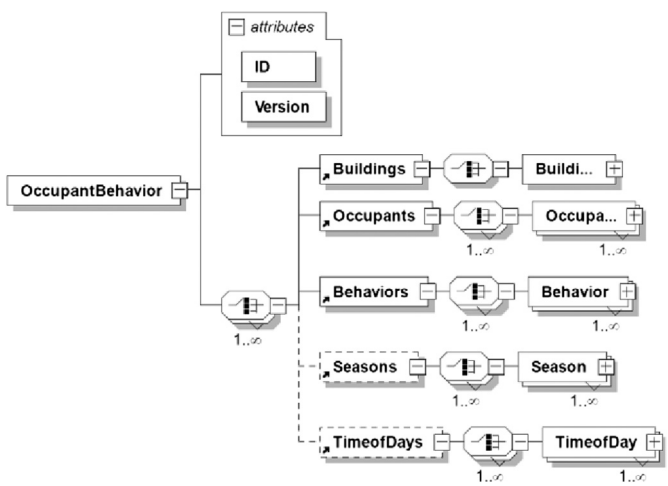

Fig. 1. The main root element **OccupantBehavior** from the xsd file with ID and version attribute and showing buildings, occupants, behaviors, seasons and time of day elements.

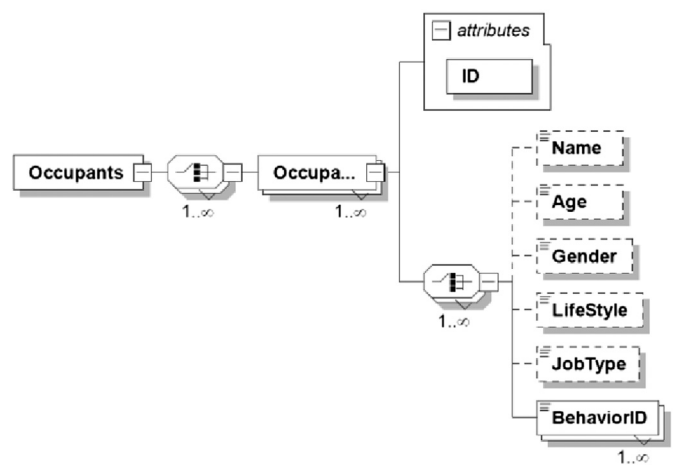

Fig. 3. The tree diagram from the xsd file identifying the input characteristics of the **Occupants**.

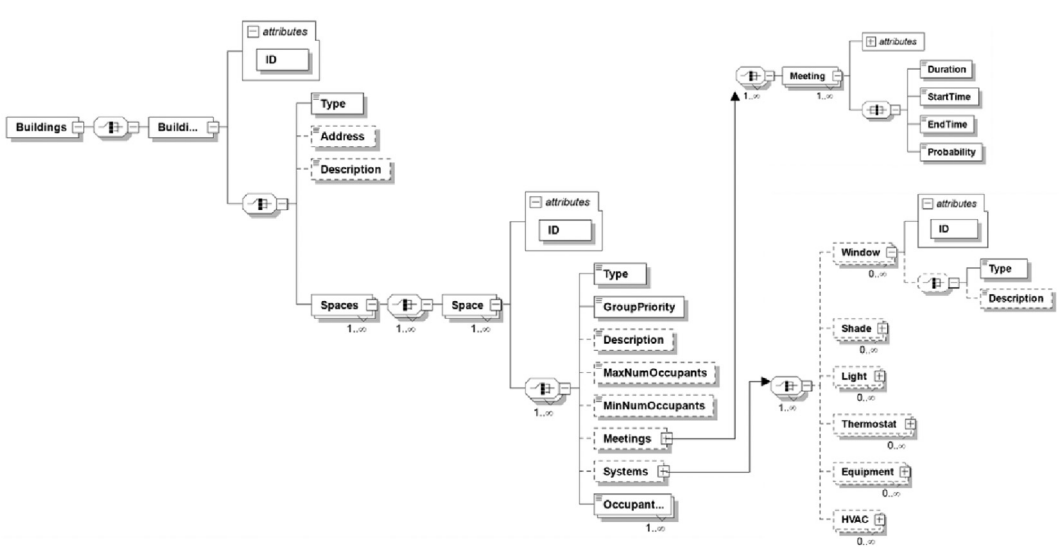

Fig. 2. The tree diagram from the xsd file showing the general characteristics of the **Buildings** element, with children Spaces branching into Meetings and Systems.

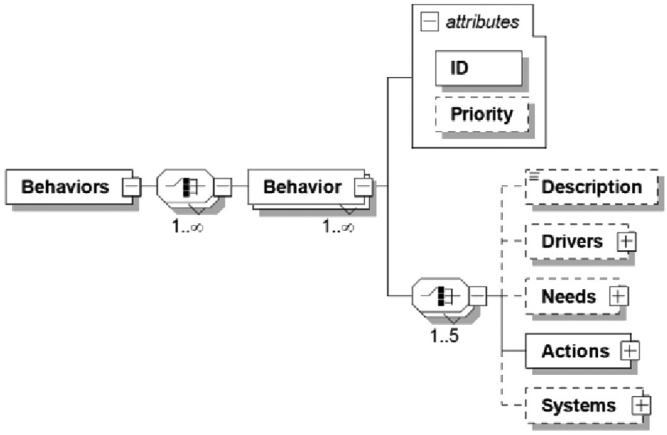

Fig. 4. The topology of the **Behaviors** element taken from the xsd file showing the general characteristics of how the behavior element branches into drivers, needs, actions and systems child elements.

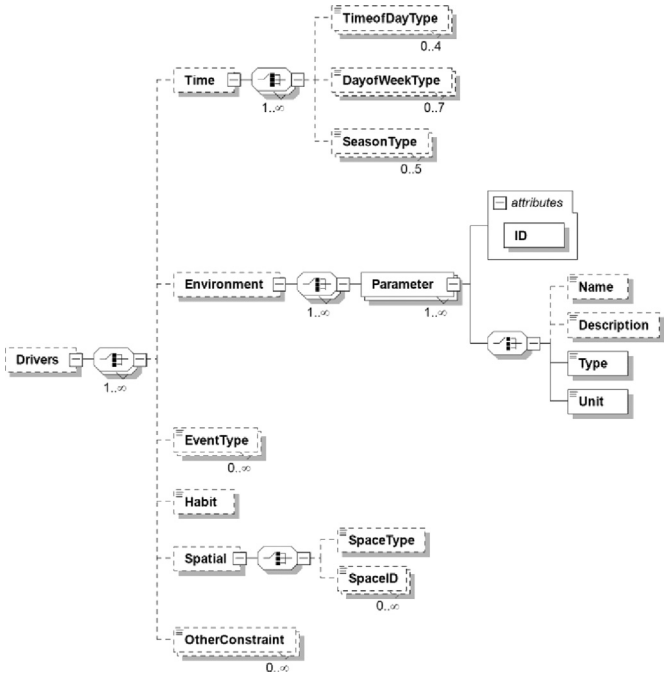

Fig. 5. The topology of the **Drivers** element taken from the xsd file showing the primary parameters of Time, Environment, EventType, Habit, Spatial and OtherConstraint.

minimum and maximum attributes. The *Thermal* child element allows for 4 different comfort element options following the ISO adaptive comfort standard [45], the ASHRAE adaptive comfort standard and comfort envelope [9], or a user-defined comfort envelope. The *Non-physical* element is less quantitative, consisting of descriptive enumerations such as privacy, view, preference, safety and other.

The *Actions* element has the 4 child elements of *Interaction*, *Inaction*, *Report*, and *Movement*. Child elements of *Interaction* include different mathematical methods (i.e. constant value, linear 1D, 2D, 3D, quadratic 1D, logit1D, 2D, 3D and Weibull 1D) to model the probability of actions occurring. The independent variables in the mathematical expressions reference the child element *Parameters* defined by *Drivers*. The equation coefficients are decimal inputs. Fig. 7 displays the topology of the *Actions* element taken from the xsd file showing the child elements which capture the mathematical format (parameters, coefficients) used to capture the probability of occupant actions in the obXML schema.

This method of providing a standard equation to characterize an occupant's action allows for a less deterministic representation of behavior, potentially leading to more insight into the impact of occupant behavior on building energy consumption [46]. Moreover, there are alternative ways to effectively implement actions using obXML. For example, Li and Lam [47] proposed an exchange language formulated in the XML format to facilitate the integration of functions and algorithms with existing tools. CapeML (Computer Aided Process Engineering Markup Language) [48] is an XML-based intermediate format for describing process engineering models. MathML (Mathematical Markup Language) [49] is an application of XML used for describing mathematical formulas and their integration into other documents. OSiL (Optimization Services Instance Language) [50] is a general schema used for multistage stochastic programs. OSiL forms part of a larger XML-based schema that is designed to allow the expression of a wide variety of different linear and nonlinear stochastic equations, random variables and Markov Chains. For obXML version 1.0, our approach of using a data structure was deemed simple and effective.

The *Inaction* child element represents the decision of an occupant to not act and remain uncomfortable within a space. The *Report* child element indicates that an occupant seeks assistance or files a complaint about their personal discomfort, but does not take direct action to satisfy their needs. The *MarkovChainModel* [51] or *OtherModel* children elements are derived from the *Movement* parent element and require the specification of occupancy in spaces or details about events occurring within the space.

The *Systems* element contains the details of building equipment or components that an occupant may interact with to satisfy their needs. The 6 child elements under the *Systems* parent element include *Windows*, *Shades*, *Lights*, *Thermostats*, *Equipment* (electrical appliances, office equipment), and *HVAC* (Fig. 8). Each has a control *Type* that describes the type of allowable actions e.g. a window is operable or fixed; a light can be switched on/off, dimmable, two steps, or three steps; a shade is adjustable or fixed; a thermostat is adjustable or fixed; HVAC is controllable, zonal controllable or zonal fixed. The unique attribute ID refers to the child element of the detailed system (window) defined by the *Building* parent element.

Lastly, the *Seasons* and *Time of Day* elements are optional providing the user the ability to input additional information about seasonal specifics (start month, end month, start day, end day) and details about the time of day (start hour, start minute, end hour, end minute) Fig. 9.

3. Examples using the obXML

In this section, the implementation of a Weibull distribution and logistic regression equation are implemented into the obXML schema as examples. Specifically, two models representing (1) the probability of turning on the air conditioner (AC) when feeling hot and (2) the closing of the blinds [52,53] are presented. Other human-building interactions (e.g. thermostat, equipment, lights interactions, or occupant movement) can be implemented using a similar methodology.

3.1. Turn on the air conditioner

To highlight the versatility of the obXML schema an example is presented representing the hypothetical probability of an occupant turning on the air conditioner when feeling hot. For this a Weibull distribution was used to describe the probability of turning on AC as a function of the indoor air temperature (Eq. (1)):

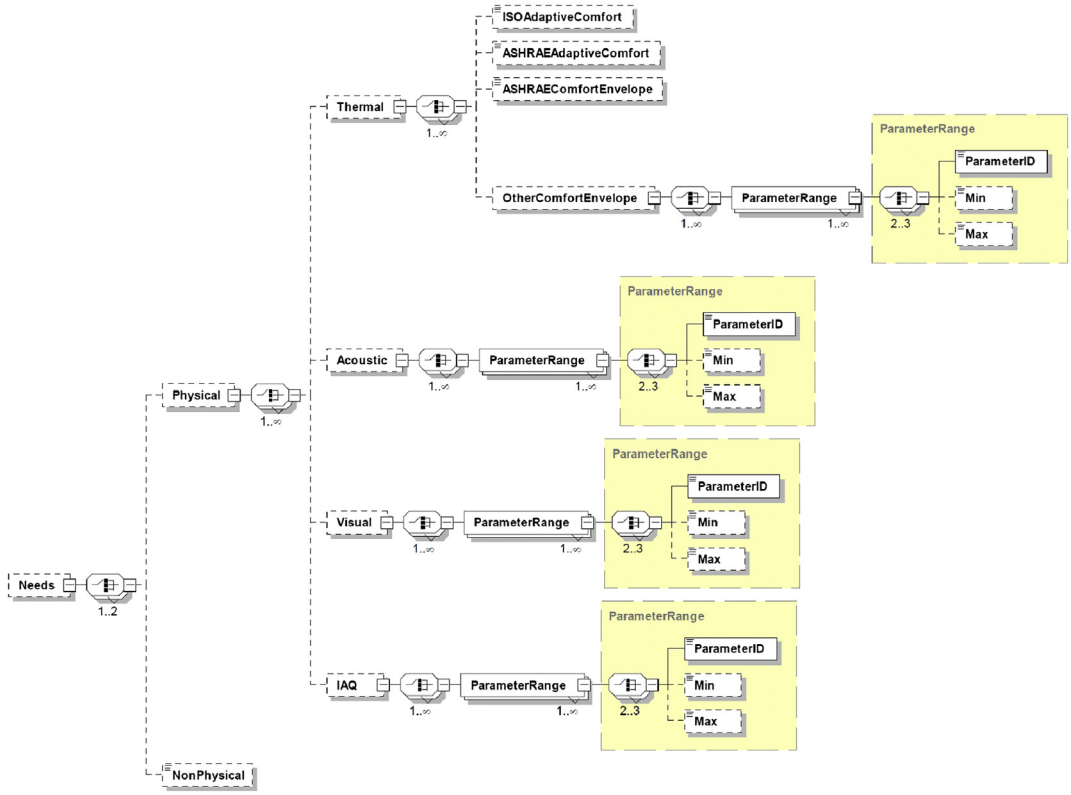

Fig. 6. The topology of the **Needs** taken from the xsd file showing the primary physical and nonphysical elements.

$$p = 1 - e^{\left\{\left[\!\left[\frac{U-X}{L}\right]\!\right]^k\right\}\Delta t} \tag{1}$$

where: p is the probability of turning on the AC; L represents the difference between the maximum and minimum comfort range (26 °C–31 °C); U is the threshold minimum temperature (26 °C); k is a constant representing the slope of the probability curve (taken as 8); Δt is the time interval (taken as 10 min), X represents the indoor air temperature. Using this information, the obXML schema can be used to represent the scenario and generate an XML file which will be read in the future by a functional mockup interface for co-simulation with a building energy simulation software. Fig. 10 shows a code snippet showing the main root *Behavior*, with *Drivers*, *Needs*, *Actions* and *Systems* of an occupant turning on the AC.

To describe the actions of turning on the AC (*Drivers* → *Time*), the time of day is evening, the day of the week is the weekday, the season type is all seasons. Under *Drivers* → *Environment* → *Parameter*, the primary parameter is the indoor air dry-bulb temperature. The *Needs* necessitating the AC-turn-on action were derived from the physical needs of thermal comfort (*Needs* → *Physical* → *Thermal*). Under *Actions*, a one-dimensional Weibull equation is used with an 's' shaped curve probability function. The coefficients are determined to be (U, L, k) of 26, 5, 8, respectively. The *System* is the HVAC system that has zone on/off function. For this scenario, the schema provides a standardized way to describe the probability of the occupant action of turning on the AC.

3.2. Closing the blinds

Another example of occupant behavior action is presented by using a field study of venetian blind usage in air-conditioned office buildings. Between September 2004 and February 2005, Inkarojrit [52,53] monitored the Tang medical center and an administrative building at the Lawrence Berkeley National Laboratory, located in Berkeley, California. The field study was supported by a survey of building occupants within the Tang Building. Inkarojrit [52,53] provides 13 different models to calculate the probability of the window blind being completely closed. The 13 models use different combinations of inputs and coefficients, with the most accurate model described as follows (Eq. (2)):

$$\log\left(\frac{p}{1-p}\right) = \alpha + b_{win}\cdot L_{win} + b_{mxwin}\cdot L_{mxwin} + b_{vert}\cdot r_{vert} + b_{sen}\cdot L_{sen} \tag{2}$$

where: p is the probability of closing the window blinds; L_{win} is the average luminance of the window or source luminance (cd/m^2); L_{mxwin} is the maximum luminance of the window (cd/m^2); r_{vert} is the vertical solar radiation (W/m^2); L_{sen} is the occupants' self-reported 'sensitivity to brightness' (least sensitive 1 and most sensitive 7); a and b are coefficients. Fig. 11 shows a code snippet of only the *Behaviors* primary branch, representing blind-closing behavior, showing the *Drivers*, *Needs*, *Actions* and *Systems*.

To describe blind-closing actions in the obXML schema under *Drivers* → *Time*, the season is winter representing the September 2004 and February 2005 testing period. The independent variables (L_{win}, L_{mxwin}, r_{vert}, L_{sen}) (Eq (2)) would be represented under *Drivers* → *Environment* → *Parameter*. The four drivers are luminance from the window, maximum luminance from the window, vertical solar radiation, and occupant sensitivity to brightness. For the *Drivers* → *Spatial* category, the private office best represents the cubical nature of the Tang Buildings [53]. The *Needs* necessitating the blind-closing action were derived from two possible

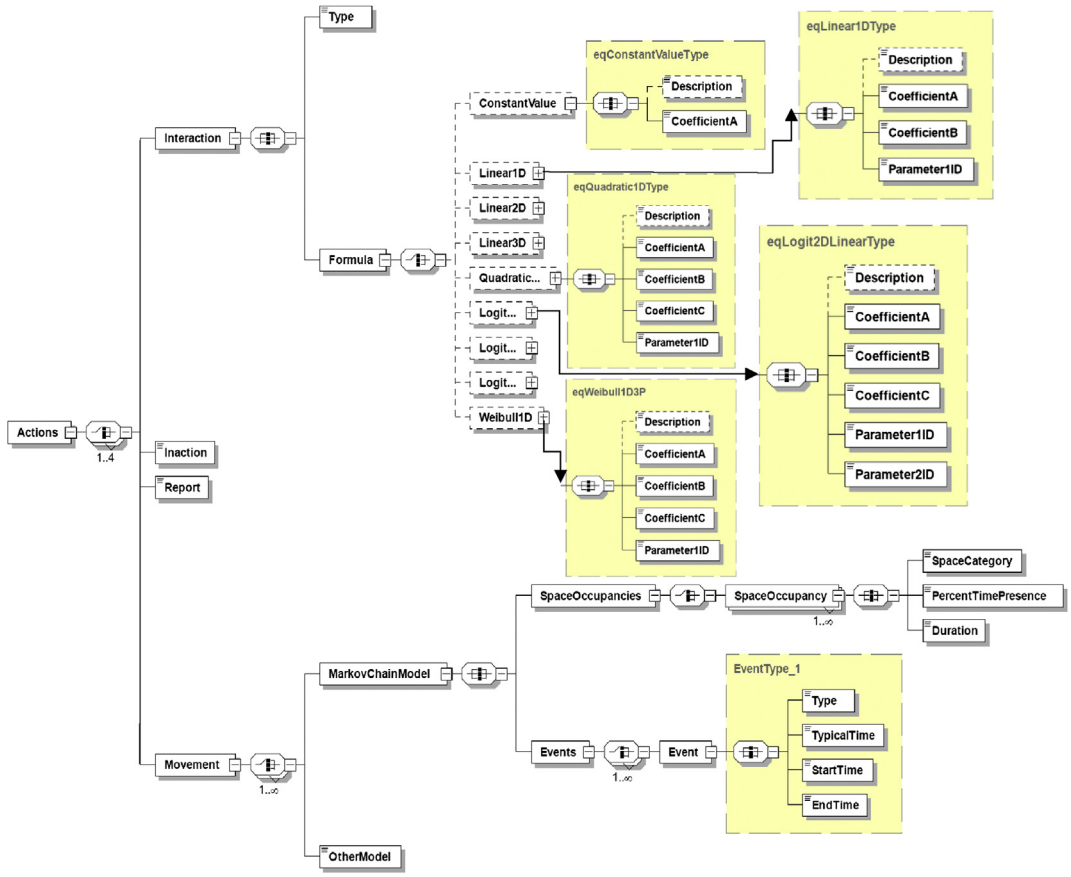

Fig. 7. The topology of **Actions** taken from the xsd file showing the primary parameters of Interaction, Inaction, Report and Movement (each equation type displays similar constituents including an optional description, reference parameter(s) and coefficients depending upon the structure of the equation).

motivators: (1) the vertical solar radiation at the window for the regulation of thermal comfort (*Needs* → *Physical* → *Thermal*) and, (2) the window or background luminance level, indicating an adjustment needed to obtain visual comfort (*Needs* → *Physical* → *Visual*). Under *Actions*, a 4D logit equation would be used referencing the *Drivers* input parameters. Using the most accurate model, the coefficients (α, b_{win}, b_{mxwin}, b_{vert}, b_{sen}) were −14.66, −5.82, 6.20, 3.29, 1.22, respectively [53]. The *System* is the blinds which are operable. It was observed that using the aforementioned drivers with this model allowed a prediction accuracy of 84–89% of the observed window blind control behavior [52].

4. Discussion

It has been well established that interactions between occupants and building systems can significantly increase or decrease the total building energy use. With a disproportionate amount of attention directed towards system or technological efficiency, the low priority placed on energy-related OB research has resulted in large discrepancies in building design optimization, energy diagnosis, performance evaluation, and building energy simulations. Current simulation-based evaluations of building energy performance oversimplify assumptions on occupant behavior creating inconsistencies between simulated and actual building energy performance. The main aim of the obXML schema is to facilitate the development of new methodologies to enable robust and standardized occupant behavior descriptions which can better capture real-life complexity and uncertainty during simulation. The schema structure has been conceived to maximize its flexibility and its potential application for occupant behavior modeling standardization. In a sense, the actual drivers, needs, actions and systems that are included in the schema are placeholders used to establish a common language and platform to homogenize the representation of energy-related OB in buildings for the international research community. The obXML schema allows the creation of obXML instance files which contain a representation of occupant behaviors in buildings following the DNAS framework ontology. The obXML schema facilitates the development of a quantitative description of human interactions with building systems. For actual implementation and practical use an online repository has been created at behavior.lbl.gov where the obXML schema may be downloaded.

One challenge with the development of the schema is establishing the order of events, considering multiple occupants and multiple actions. To account for this, each behavior within a group of behaviors is defined by a unique ID and priority indicator. An example of a situation with multiple actions is as follows: The indoor temperature is too warm (*Driver*) so the occupant wants to obtain thermal comfort (*Needs*). The occupant has the option to perform multiple *Actions*, such as open the window, close the blinds or turn on the HVAC system. The question becomes which action is performed first and how is this sequence of events captured by obXML? In the current version of the schema (version 1.0) a priority ranking may be applied manually to each behavior. For example, if the outdoor temperature is greater than the indoor temperature, and the time of day is night (no outdoor illuminance), then turning on the AC may be the best action considering the circumstance, with a priority ranking.

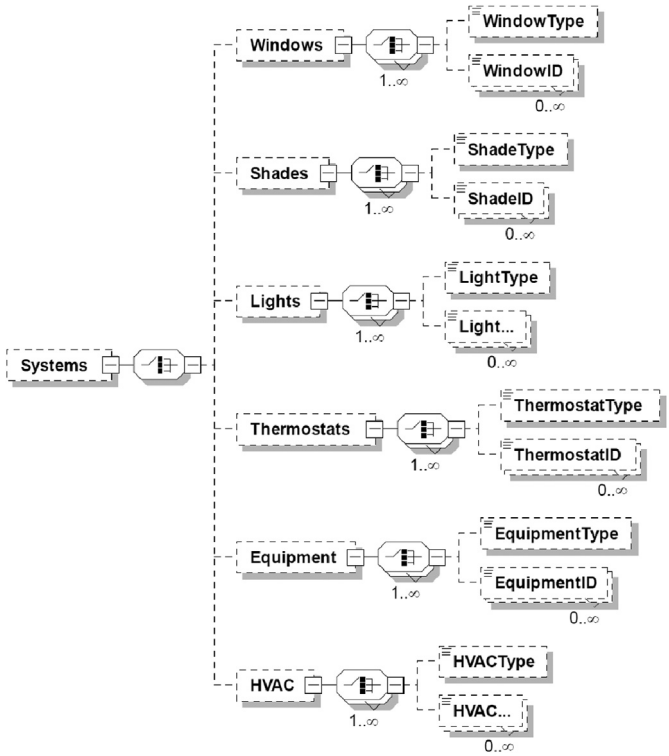

Fig. 8. The topology of the **Systems** in the building which are operable by occupants, including Windows, Shades, Lights, Thermostats, Equipment and HVAC.

In future obXML versions it is envisioned to have an automated priority ranking system linked to specific *Drivers* (e.g. time of day, outdoor temperature, outdoor wind speed) (Fig. 12). Future work will address the algorithms needed for this priority ranking system with improvements to include constraints associated with (1) group versus individual behavior, (2) the occurrence of simultaneous multiple-actions, (3) the sequence of occupant actions and, (4) better accountability for culturally-motivated actions. Addressing these issues will occur in conjunction with the development of an obFMU (occupant behavior Functional Mockup Unit) which can utilize the xml file generated by the schema. More broadly, capturing these diverse aspects of behavior in simulation and co-simulation with other BEM programs (e.g. DeST, ESP-r) requires an alliance in the time-step duration and sequencing of steps.

Under current practices, the obXML schema is being used to describe occupant behavior models as part of a software module being developed in Subtask D of the IEA EBC Annex 66 [54]. The behavior software module can be used in three different ways: (1) to pre-calculate schedules or settings which are used as inputs for occupancy or actions without feedback; (2) to direct code integration via function calls to dynamic link libraries (DLLs); and (3) to facilitate co-simulation with current BEM programs via FMIs. The advantages of this approach against the direct implementation or coupling of advanced OB models in/with building simulation programs are that it (1) utilizes the capabilities of domain-specific simulation and provides the flexibility to be integrated with an array of building modeling programs, extending beyond EnergyPlus, (2) allows users the option to select preferred simulation programs and directly enhances the occupant modeling component of the select simulation program and, (3) enables standardize representation of occupant behavior models for flexibility, future expansion and interoperability. Theses aspects support the overall objective to gain a better understanding and quantification of the impact occupant behavior has on total building energy consumption.

5. Conclusions

The DNAS framework (e.g. drivers, needs, actions and systems) described in Part I [1] was implemented into the form of an XML

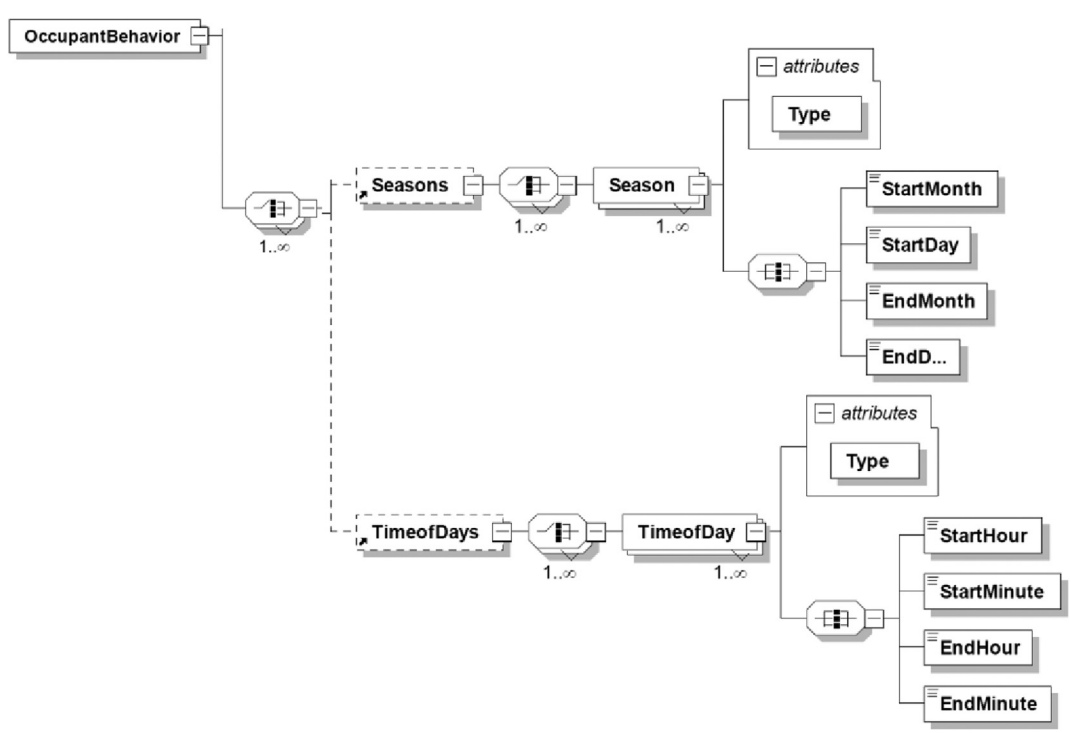

Fig. 9. The topology of the **Seasons** and **TimeofDays** optional main elements specifying details about the season and time.

```
<Behavior ID="B_AC2">
    <Description>Hot AC On</Description>
    <Drivers>
        <Time>
                <TimeofDay>Evening</TimeofDay>
                <DayofWeek>Weekday</DayofWeek>
                <SeasonType>All</SeasonType>
        </Time>
        <Environment>
            <Parameter ID="P11">
                <Name>Room dry-bulb air temperature</Name>
                 <Type>RoomAirTemperature</Type>
                 <Unit>C</Unit>
            </Parameter>
        </Environment>
    </Drivers>
        <Needs>
            <Physical>
                <Thermal>
                <OtherComfortEnvelope>
                <ParameterRange>
                   <ParameterID>P11</ParameterID>
                   <Min>26</Min>
                   <Max>31</Max>
                </ParameterRange>
                </OtherComfortEnvelope>
                </Thermal>
            </Physical>
        </Needs>
        <Actions>
            <Interaction>
            <Type>TurnOn</Type>
                <Formula>
                <Weibull1D>
                <Description>S Shaped Curve Probability Function</Description>
                <CoefficientA>26</CoefficientA>
                <CoefficientB>8</CoefficientB>
                <CoefficientC>5</CoefficientC>
                <Parameter1ID>P11</Parameter1ID>
                </Weibull1D>
                </Formula>
            </Interaction>
        </Actions>
        <Systems>
            <HVAC>
            <HVACType>ZoneOnOff</HVACType>
            </HVAC>
        </Systems>
</Behavior>
```

Fig. 10. Representation of the turning on the AC generated using the obXML schema.

schema called obXML. The notable contributions of the development of the obXML version 1.0 include the following:

1. The obXML schema provides a standardized structure to describe occupant behavior which can be used by researchers and industry stakeholders to standardize the language of occupant behavior studies.
2. The obXML schema provides a platform to describe occupant behavior in buildings and assess the impact of occupant behavior on building energy modeling in more detail than present methods allow.
3. The design of the obXML schema allows for flexibility and extensibility with easy adaptability, so that it can be modified to include additional elements or attributes if so desired.
4. The obXML schema is intended to be integrated into current BEM programs or Functional Mock-up Units to support both model exchange and co-simulation of dynamic models.

Further development and improvements to the obXML schema are foreseen and will be released in future versions. Similar to gbXML, the obXML schema can evolve as the core of Occupant Information Modeling (OIM), to provide a clear and robust representation of building occupants and their interactions with building systems. A new generation of virtual building models and building simulation frameworks need to be enriched with additional data models able to express the dynamic behavior of a building due to the energy-related behavior of the occupants. The development of the obXML schema is one step in this direction.

```
<Behavior ID="OB2">
    <Drivers>
        <Time>
          <Season ID="B">
              <Type>Winter</Type>
              <StartMonth>9</StartMonth>
              <EndMonth>2</EndMonth>
          </Season>
        </Time>
        <Environment>
          <Parameter Type="WindowLuminance" Unit="cd/m2" ID="C">
          <Parameter Type="MaxLuminance" Unit="cd/m2" ID="D">
          <Parameter Type="SolarRadiation" Unit="W/m2" ID="E">
          <Parameter Type="BrightnessIndex" Unit=" numerical" ID="F">
        </Environment>
        <Spatial>
          <SpaceType>OfficePrivate</SpaceType>
        </Spatial>
    </Drivers>
    <Needs>
        <Physical>
          <Thermal>
              <OtherComfortEnvelope>
                    <ParameterLimit ParameterIDREF="E" min="5.13" max="355"/>
              </OtherComfortEnvelope>
          </Thermal>
          <Visual>
              <ParameterLimit ParameterIDREF="C" min="478" max="5754"/>
              <ParameterLimit ParameterIDREF="D" min="2454" max="33884"/>
              <ParameterLimit ParameterIDREF="F" min="1" max="7"/>
          </Visual>
        </Physical>
    </Needs>
    <Actions>
        <Interaction Type="BlindsClosed">
          <Description>action of closing the blinds</Description>
          <Formula>
              <Logit4D ID="H">
                    <Description>4D logit equation</Description>
                    <CoefficientA>-14.66</CoefficientA>
                    <CoefficientB>-5.82</CoefficientB>
                    <CoefficientC>6.20</CoefficientC>
                    <CoefficientD>3.29</CoefficientD>
                    <CoefficientE>1.22</CoefficientE>
                    <Parameter1IDREF>C</Parameter1IDREF>
                    <Parameter2IDREF>D</Parameter2IDREF>
                    <Parameter3IDREF>E</Parameter3IDREF>
                    <Parameter4IDREF>F</Parameter4IDREF>
              </Logit4D>
          </Formula>
        </Interaction>
    </Actions>
    <Systems>
        <Shades>
          <ShadeType>Operable</ShadeType>
        </Shades>
    </Systems>
</Behavior>
```

Fig. 11. Representation of the blinds closing behavior using the obXML schema.

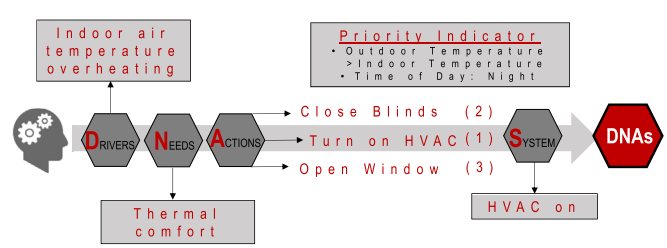

Fig. 12. Representation of applying priority indicators for an example of possible multiple actions.

Acknowledgment

This work was sponsored by the United States Department of Energy (Contract No. DE-AC02-05CH11231) under the U.S.-China Clean Energy Research Center for Building Energy Efficiency. This work is also part of the research activities of the International Energy Agency Energy in Buildings and Communities Program Annex 66, Definition and Simulation of Occupant Behavior in Buildings.

References

[1] T. Hong, S. D'Oca, W.J.N. Turner, S.C. Taylor-Lange, An ontology to represent energy-related occupant behavior in buildings. Part I: introduction to the DNAs framework, Build. Environ. 92 (2015) 764–777.
[2] Hong T, Taylor-Lange SC, D'Oca S, Yan D, Corgnati SP. Advances in research and applications of energy-related occupant behavior in buildings. Eng. Adv. (accepted).
[3] U.S. Environmental Protection Agency, EPA/400/1-89/001C, Report to Congress on Indoor Air Quality, vol. 2, 1989. Washington, DC.
[4] European Commission, Indoor Air Pollution: New EU Research Reveals Higher Risks than Previously Thought, Press Release Database, Brussels, 2003.
[5] M. Humphreys, An adaptive approach to thermal comfort criteria, Nat. Vent. Build. Build. Senses Econ. Soc. (1997) 129–139.
[6] K.C. Parson, Human Thermal Environments: the Effects of Hot, Moderate and Cold Environments on Human Health, Comfort and Performance, Taylor & Francis, 1993.
[7] R. de Dear, G.S. Brager, Developing an adaptive model of thermal comfort preference, ASHRAE Trans. 104 (1) (1998) 27–49.
[8] UNI Standard EN15251, Indoor Environmental Input Parameters for Design and Assessment of Energy Performance of Buildings Addressing Indoor Air Quality, Thermal Environment, Lighting and Acoustics, European Committee for Standardization, Brussels, 2007.
[9] ASHRAE/ANSI Standard 55-2010, Thermal Environmental Conditions for Human Occupancy, American Society of Heating, Refrigerating, and Air-Conditioning Engineers, Atlanta, GA, 2010.
[10] International Energy Agency (IEA), Energy in Buildings and Communities Programme (EBC) Annex 53 – Total Energy Use in Buildings, Analysis and Evaluation Methods, Final Report IEA, 2013.
[11] A. Mahdavi, C. Proglhof, User Behavior and Energy Performance in Buildings, Internationalen Energiewirtschaftstagung an der TU Wien (IEWT), Wien, Austria, 2009.
[12] S. Karjalainen, Thermal comfort and use of thermostats in Finnish homes and offices, Build. Environ. 44 (2009) 1237–1245.
[13] J.F. Nicol, M.A. Humphreys, Adaptive thermal comfort and sustainable thermal standards for buildings, Energ Build. 34 (2002) 563–572.
[14] W. Turner, T. Hong, A technical framework to describe occupant behavior in buildings, in: Conference Proceedings in Behavior Energy and Climate Change (BECC), Sacramento, US, 2013.
[15] G.Y. Yun, K. Steemers, Time-dependent occupant behaviour models of window control in summer, Build. Environ. 43 (9) (Sep. 2008) 1471–1482.
[16] J.F. Nicol, Characterizing occupant behaviour in buildings: towards a stochastical model of occupant use of windows, lights, blinds, heaters and fans, in: Building Research & Information, 2001, pp. 1073–1078.
[17] S. Roth, Open Green Building XML Schema: a Building Information Modeling Solution for Our Green World, gbXML Schema (5.12), 2014. www.gbxml.org.
[18] BuildingSMART. IfcXML, http://www.buildingsmart-tech.org/specifications/ifcxml-releases, accessed May 29, 2015.
[19] International Standard Organization (ISO) ISO 16739, Industry Foundation Classes (IFC) for Data Sharing in the Construction and Facility Management Industries, 2013.
[20] H.A. Babaie, A. Babaei, Modeling geological objects with the XML schema, Comput. Geosci. 31 (2004) 1135–1150.
[21] G. Zheng, H. Li, C. Wang, Q. Sheng, H. Fan, S. Yang, B. Liu, J. Dai, R. Zeng, L. Xie, A platform to standardize, store, and visualize proteomics experimental data, Acta Biochim. Biophys. Sin. 41 (4) (2009) 273–279.
[22] W. Yan, L. Jiajin, H. Dongmei, A metadata management framework for marine information based on XML, in: Proceedings of the IET International Conference on Information Science and Control Engineering, 2012, 1.01-1.04.
[23] M. Otter, H. Elmqvist, T. Blochwitz, J. Mauss, A. Junghanns, H. Olsson, Functional Mockup Interface – Overview, INRIA, 2011. synchronics.inria.fr.
[24] M. Tiller, Introduction to Physical Modeling with Modelica, 2001st ed., Kluwer Academic Publishers, Boston/Dordrecht/London, 2001.
[25] T.S. Nouidui, M. Wetter, W. Zuo, Functional mock-up unit for co-simulation import in EnergyPlus, Build. Perform. Simul. 7 (3) (2013) 1–11.
[26] P.G. Bernstein, J.H. Pittman, Barriers to the Adoption of Building Information Modeling in the Building Industry, Autodesk Building Solutions Whitepaper, Autodesk Inc., CA, 2005.
[27] Energy Information Administration (EIA), Residential Energy Consumption Survey: Preliminary Housing Characteristics Tables, 2010.
[28] Altova Software. XMLSpy, http://www.altova.com. (accessed 29.05.15).
[29] S. Herkel, U. Knapp, Pfafferott, Towards a model of user behaviour regarding the manual control of windows in office buildings, Build. Environ. 43 (4) (2008) 588–600.
[30] V. Fabi, R.V. Andersen, S. Corgnati, B.W. Olesen, Occupants' window opening behaviour: a literature review of factors influencing occupant behaviour and models, Build. Environ. 58 (2012) 188–198.
[31] K. Ackerly, L. Baker, G.S. Brager, Window Use in Mixed-mode Buildings: a Literature Review, Centre for Built Environment Summary Report, Berkeley, 2011.
[32] R.V. Andersen, J. Toftum, K.K. Andersen, B.W. Olesen, Survey of occupant behaviour and control of indoor environment in Danish dwellings, Energy Build. 41 (2009) 11–16.
[33] C.F. Reinhart, Lightswitch 2002: A model for manual and automated control of electric lighting and blinds, Sol. Energy 77 (2004) 15–28.
[34] Y. Zhang, P. Barrett, Factors influencing the occupants' window opening behaviour in a naturally ventilated office building, Build. Environ. 50 (2012) 125–134.
[35] W. O'Brien, K. Kapsis, A.K. Athienitis, Manually-operated window shade patterns in office buildings: a critical review, Build. Environ. 60 (2013) 319–338.
[36] K. Van Den Wymelenberg, Patterns of occupant interaction with window blinds: a literature review, Energy Build. 51 (2012) 165–176.
[37] A.D. Galasiu, J.A. Veitch, Occupant preferences and satisfaction with the luminous environment and control systems in daylit offices: a literature review, Energy Build. 38 (2006) 728–742.
[38] X. Guo, D.K. Tiller, G.P. Henze, C.E. Waters, The performance of occupancy-based lighting control systems: a review, Light. Res. Technol. 42 (2010) 415.
[39] S. Wei, R. Jones, P. de Wilde, Driving factors for occupant-controlled space heating in residential buildings, Energy Build. 70 (2014) 36–44.
[40] E. Shove, Converging conventions of comfort, cleanliness and convenience, J. Consumer Policy 26 (2013) 395–418.
[41] A. Faiers, M. Cook, C. Neame, Towards a contemporary approach for understanding consumer behavior in the context of domestic use, Energy Policy 35 (2007) 4381–4390.
[42] R.M. Tetlow, C. Dronkelaar, C.P. Beaman, A.A. Elmualim, K. Couling, Identifying behavioural predictors of small power electricity consumption in office buildings, Build. Environ. 92 (2015) 75–85.
[43] J. Zhao, R. Yun, B. Lasternas, H. Wang, K.P. Lam, A. Aziz, V. Loftness, Occupant behavior and schedule prediction based on office appliance energy consumption data mining, in: Proceedings of the CISBAT 2013 Lausanne, Switzerland, 2013.
[44] G.B. Gunay, W. O'Brien, I. Beausoleil-Morrison, A critical review of observation studies, modeling and simulation of adaptive occupant behaviors in offices, Build. Environ. 70 (2013) 31–47.
[45] ISO, International Standard 7730, Moderate Thermal Environments- Determination of the PMV and PPD Indices and Specification of the Conditions of Thermal Comfort, second ed., International Standards Organization, Genva, 2004.
[46] C. Li, T. Hong, D. Yan, An insight into actual energy use and its drivers in high-performance buildings, Appl. Energy 131 (2014) 394–410.
[47] H. Li, C.P. Lam, An exchange language for process modeling and model management, in: Proceedings of the 7th International Symposium on Dynamics and Control of Process Systems, Boston, US, 2004.
[48] L.V. Wedel, CapeML—A Model Exchange Language for Chemical Process Modeling, Technical report, RWTH Aachen University, 2002.
[49] R. Ausbrooks, S. Buswell, D. Carlisle, S. Dalmas, S. Devitt, A. Diaz, S. Watt, Mathematical Markup Language (MathML) Version 2.0, W3C recommendation. World Wide Web Consortium, 2003.
[50] R. Fourer, D.M. Gay, B.K. Kernighan, A Modeling Language for Mathematical Programming, Brooks Cole – Thomson Learning, Pacific Grove, CA, 2003.
[51] J. Page, D. Robinson, J.-L. Scartezzini, A generalized stochastic model for the simulation of occupant presence, Energy Build. 40 (2) (2008) 83–98.
[52] V. Inkarojrit, Multivariate predictive window blind control models for intelligent building façade systems, Proc. Build. Simul. (2007).
[53] V. Inkarojrit, Balancing Comfort: Occupants' Control of Window Blinds in Private Offices, Ph.D. dissertation, University of California, Berkeley, 2005.
[54] International Energy Agency (IEA) Energy in Buildings and Communities Programme (EBC) Annex 66, Definition and Simulation of Occupant Behavior in Buildings, 2013-2017. www.annex66.org.