LBL-35967
UC-414

Lawrence Berkeley Laboratory

UNIVERSITY OF CALIFORNIA

Accelerator & Fusion Research Division

To be presented at the LINAC '94 Conference, Tsukuba, Japan, August 21–26, 1994, and to be published in the Proceedings

Progress in Advanced Accelerator Concepts

A.M. Sessler

August 1994

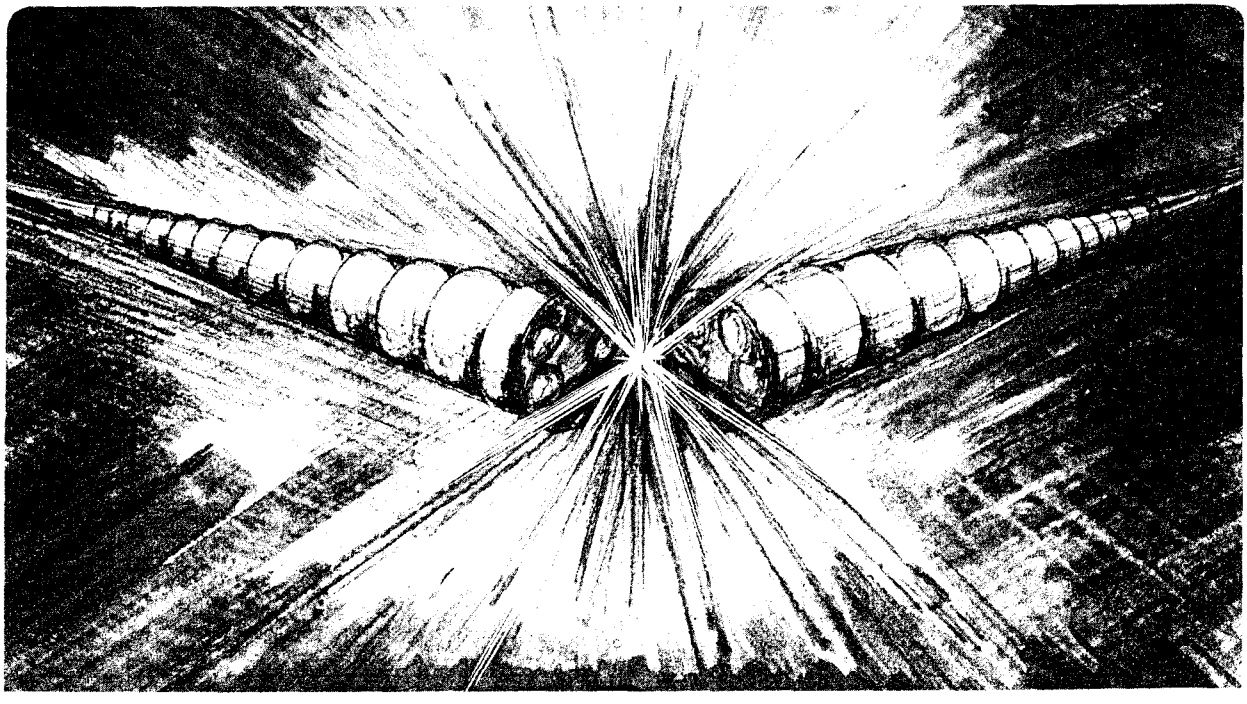

LOAN COPY
Circulates
for 4 weeks
Bldg. 50 Library.
Copy 2
LBL-35967

Prepared for the U.S. Department of Energy under Contract Number DE-AC03-76SF00098

LBL-35967
UC-414
CBP Note - 094

PROGRESS IN ADVANCED ACCELERATOR CONCEPTS

ANDREW M. SESSLER

Department of Collider Physics
University of California

and

Accelerator & Fusion Research Division
Lawrence Berkeley Laboratory
University of California
Berkeley, California 94720

August 1994

*This work was supported by the Director, Office of Energy Research, Office of High Energy and Nuclear Physics, Division of High Energy Physics, of the U.S. Department of Energy under Contract No. DE-AC 03-76SF00098.

PROGRESS IN ADVANCED ACCELERATOR CONCEPTS*

Andrew M. Sessler
Center for Beam Physics
Lawrence Berkeley Laboratory
University of California
Berkeley, CA 94720

Abstract

A review is given of recent progress in this field, drawing heavily upon material presented at the Workshop on Advanced Accelerator Concepts, The Abbey, June 12-18, 1994. Attention is addressed to (1) plasma based concepts, (2) photo-cathodes, (3) radio frequency sources and Two-Beam Accelerators, (4) near and far-field schemes (including collective accelerators), (5) beam handling and conditioning, and (6) exotic collider concepts (such as photon colliders and muon colliders).

Introduction

At the Workshop on Advanced Accelerator Concepts, Lake Geneva [1], just held, in June 1994, there were presented, by dozens of the physicists active in this field, their results during the last two years since the previous Workshop [2]. Very recently, Jonathan Wurtele has written a review article [3], while a review paper on the same subject was presented by Tom Katsouleas just after the recent Workshop, and a review article was written some years ago by myself [4].

Given these various sources of information, as well, of course, as the original literature, it is not necessary here, or even possible given the restriction of space, to go into any detail on the various ideas and/or the progress on old ideas. Rather, I shall here briefly describe the progress and the problems which the various approaches face. Inevitably, this report will be rather personal and it should be understood that way: here is one person's view of the field of advanced accelerator concepts; other people will have different opinions.

Plasma Based Schemes

It was as long ago as 1979 that John Dawson and Toshiki Tajima put forward the concept of acceleration of particles in a plasma [5]. The motivation is that a plasma is "already broken down" and therefore can support a very large gradient. Since then there have been hundreds of papers written on the subject. The most promising schemes are those involving the beat-wave excitation of plasma waves and those involving the wake field excitation of the same plasma waves. Significant progress has been experimentally made, during the last year or so, in both regards.

* Supported in part by the Director, Office of Energy Research, Office of High Energy and Nuclear Physics, Division of High Energy Physics, of the US Department of Energy under contract No.AC03-76SF00098.

The first advance is that of the UCLA Group making use of beat waves (which they, and a number of other groups had previously generated) to accelerate injected electrons [6,7]. (The Groups in Japan and in Canada have also reported acceleration of injected electrons, but have not yet published their results.) The UCLA Group, led by Chan Joshi, injected electrons at 2 MeV and accelerated them up to 28 MeV in a plasma having a focusing length for the laser beams of about 1 cm. Thus the gradient observed was 2.8 GeV/m, far exceeding any previous gradient employed for particle acceleration. A schematic of the experiment is shown in Fig.1.

Despite the hype (an editorial in Nature, an article in the New Scientist, a feature in the New York Times, and reports in many newspapers) there is clearly a long way to go between these experimental results (fine as they are) and a practical accelerator (to say nothing of a high energy accelerator that would be a replacement for the SSC, as was suggested in most of the popular articles). The lengthy propagation of a laser beam must be achieved experimentally (two distinct methods have been put forward, one involves plasma channel guiding and one involves relativistic guiding). The plasma must be formed over a long distance and its density controlled carefully (so as to maintain resonance with the laser beat wave). One must maintain stability and reproducibility from pulse to pulse (especially for a collider). One must accelerate a significant pulse current (so far only a thousand, or so, electrons have been accelerated to over 25 MeV). The injected electrons must be bunched on the plasma wavelength scale so as to produce particles of well-defined energy. And, finally, not to be forgotten, the efficiency of laser light production, the coupling of the laser light into generation of the desired plasma wave, and the coupling of the plasma wave to the particles to be accelerated, all must receive careful attention. There are plans to make progress on all of these points.

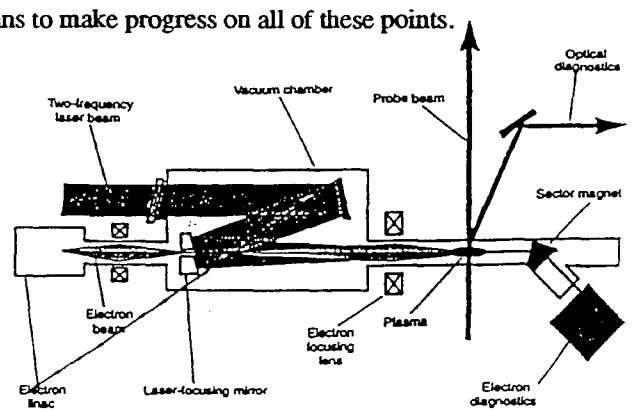

Fig. 1 Schematic of the UCLA beat-wave plasma accelerator experiment. (From Ref. 6).

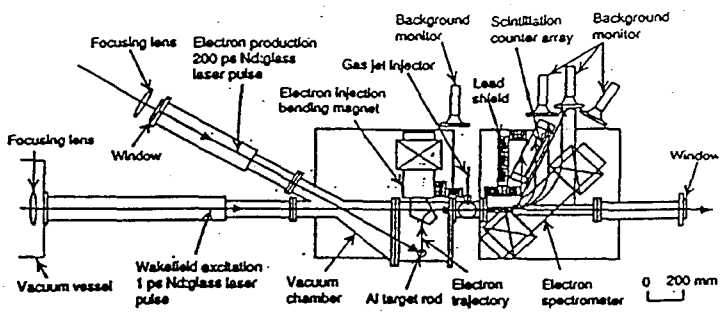

Fig. 2 Schematic of the Osaka laser wake-field experiment. (From Ref. 8).

The second large advance, on the laser wake-field accelerator, was made by the Osaka Group [8] and is depicted in Fig. 2. In this experiment, electrons were injected at 1 MeV/c and accelerated to 18 MeV/c using a 1 ps laser pulse of 10 TW. The acceleration length was very short, so that the accelerating gradient was 30 GeV/m, far greater than anyone else has achieved. The same further developments are required here, as for the beat-wave scheme, exacerbated by the fact that the laser pulse must be very short so that long-range pulse propagation is more difficult.

So far, work on plasma accelerators has been undirected, although the idea in the back of everyone's mind has been to develop accelerators for very high energy. (Hence the focus upon the highest available gradient.) But high energy accelerators form a highly developed technology and, furthermore, the devices are very expensive (which means that only very conservative designs are taken seriously). It seems to me that the plasma accelerators had better attempt other applications (ion implantation, cheap and reliable isotope preparation, etc.) as a way to penetrate into the accelerator community.

The plasma lens, a focusing device rather than an accelerating device, has attracted considerable attention. A multi-national consortium has proposed a experiment, at 50 GeV, at the FFTB at SLAC, while experiments have been initiated, at LBL, at 50 MeV. Very fine results have been obtained by the UCLA Group [9]. A figure from their paper is reproduced as Fig. 3. One can see that they have demonstrated the focusing power of a plasma lens (prior work had only led to the inference that a plasma lens focuses). Detailed study of the under-dense and the over-dense regimes, and of plasma current compensation, await further experimental work.

Nevertheless, plasma lenses have already been demonstrated to be very effective. I believe that the first application of a plasma-based scheme to particle accelerators will be in the form of a plasma lens.

Photo-cathodes

Radio-frequency photo-cathodes once dominated the thinking at Advanced Accelerator Workshops, but no more; not because they were unsuccessful, but rather the contrary. They

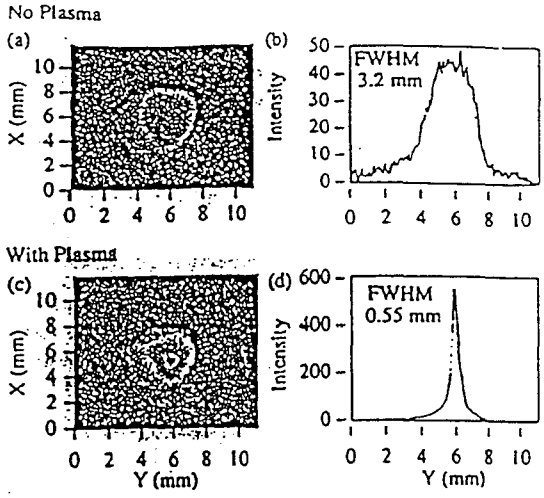

Fig. 3 The UCLA plasma lens experiment. Time averaged bunch image with no plasma taken 21 cm. downstream of the plasma (a) and a vertically lineout of the image (b), and then the same with plasma present (c) and (d). (From Ref. 9).

are now well established in the accelerator community, with devices at BNL, ANL, LLNL, UCLA, and CERN (and, surely, some others I don't know about). Nevertheless good progress in improving their performance continues. Perhaps the most impressive recent work, follows the original work, and has taken place at LANL [10].

The LANL Group, led by Richard Sheffield, has produced about 100 A of electrons at 15 MeV, in a normalized rms emittance, ε, of 1.5×10^{-6} mrad. This is a brightness ($2I/\varepsilon^2$) of 9×10^{12} A/m^2. The CERN Group [11] has pioneered the development of a new cathode material, cesium telluride (Cs_2Te), which has a lifetime of many months, a quantum efficiency of as much as 5%, and doesn't require an exceptionally high vacuum. The requisite drive laser, for photo-cathodes is now a commercial product.

Can we expect even more progress ? Yes, work is on-going on a super-conducting gun, a 17 GHz gun operating at more than 300 MV/m, 100 nC bunches, 5000 A bunched beams, flat bunches, and better understanding, and demonstration, of various emittance compensation systems.

Radio Frequency Sources and Two-Beam Accelerators

The development of linear colliders requires, as everyone knows, an RF power source which is powerful in X-band while being reliable, efficient, and economical. Efforts at SLAC, and at KEK, are focused upon the development of klystron tubes and pulse compression techniques. This is, of course, hardly an advanced accelerator concept, more properly it is the engineering development of an old idea, now pressed into a regime where the physics is making the task ever more difficult. Nevertheless, this method will be used in the next linear collider, and progress in this direction serves as a bench mark against which other RF power sources need to be compared.

The best performance to date is of the XL1 tube, at SLAC, which at 11.4 GHZ, provides an RF pulse of 51 MW for 1.5 μs, with an efficiency of more than 60%. Quite a number of new RF sources are under development. These include cluster klystrons (BNL), sheet-beam klystrons (SLAC), gyro-klystrons (Maryland, LANL), gyro-twistrons (Maryland), FELs and ubitrons (LLNL, KEK, MIT), and TWTs (Cornell). In addition work is on-going on Two-Beam Accelerators (LLNL, CERN).

The best performance, to date, of gyroklystrons (work at Maryland, led by Victor Granatstein [12]), is a power of about 20 MW at 9.8 GHz and a pulse length of 1 μs, and in a different tube, a power of 31 MW at 20 GHz and a pulse length of 800 ns. The efficiency of these devices is about 30%. Plans for improving these parameters are being executed; it is hoped to reach 100 MW in 1μs pulses at 17 GHz, and with efficiencies near 40%.

FELs have produced, in the LLNL work a decade ago, power levels of 1 GW at 35 GHz in a pulse of about 15 ns. Relativistic klystrons have produced (in work at LLNL), led by Glen Westenskow, 400 MW, at 11 GHz, but with BBU pulse shortening. They have achieved 125 MW with no pulse shortening. These pulses are just matched to linear collider use (they do not require pulse compression). The stability is acceptable, but the efficiency of the induction linacs employed is low.

The CERN people have continued to pursue, with many good results, the relativistic klystron in a Two-Beam Accelerator (TBA) where the drive beam is powered with superconducting cavities and the frequency is 30 GHz. They have made transfer structures (the heart of a relativistic klystron) and high gradient accelerating structures. In addition they have made progress in producing a drive beam, although work on this subject is very much an on-going activity.

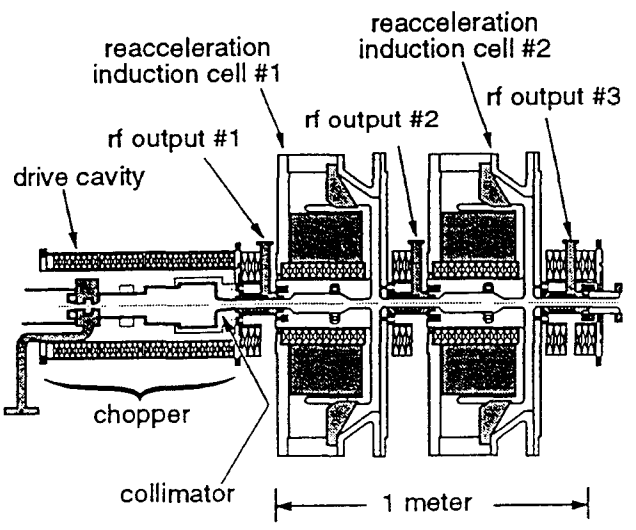

Fig. 4 Schematic of the Livermore relativistic klystron re-acceleration experiment. The extracted beam power was, 86 MW, 101 MW, 59 MW with a sum (for coincident pulses) of 172 MW. (From Ref. 13).

Plans are now underway, based upon the re-acceleration success (LLNL work [13]) shown in Fig. 4, to develop a section of Two-Beam Accelerator (TBA), incorporating a relativistic klystron and modern concepts for design and powering of an induction unit. In this way it is hoped to achieve 180 MW/m at 11 GHz in a 200 ns pulse and with an efficiency of about 35% (which is superior to that obtainable with the chain of modulators, kystron tubes, and pulse compression units by at least a factor of two).

If the center of mass energy of a linear collider is 500 GeV, or less, the forefront laboratories are planning to use klystrons to supply RF power. Once the linear collider is of higher energy, it seems necessary to employ an advanced power source, and it is with this application in mind that work on alternative RF power sources, or on TBAs, is directed.

Other groups are considering TBAs as ion accelerators (in the tens of MeV, hundreds of ampere range) [14]. In fact, experimental work has been initiated at Kharkov, using an electron beam (350 kev and 200 A) for powering a structure and accelerating an injected proton beam at 5 MeV (which it is hoped to raise to 8 MeV) [15].

Near and Far Field Schemes

An Inverse Cerenkov Accelerator (ICA) has been recently operated by Wayne Kimura at BNL, to give more than 10^6 electrons, initially at 40 MeV, an energy gain of 3.7 MeV [16]. The acceleration length, in 2.2 atm of H_2, is 12 cm, so the observed gradient was 31 MeV/m. For this experiment only a 0.7 GW laser was used; it is estimated that a gradient of 1 GeV/m would be possible with a TW laser.

Work is going on, at BNL, on a grating accelerator and on an Inverse FEL (IFEL). In the IFEL the goal is to demonstrate gain of a few MeV in 1994 and then, in about 1996, using a 200 GW laser, to demonstrate a gain of 50 MeV. In both of these devices, and really also in the ICA, propagation of a laser beam, for more than a Rayleigh Length is required for a practical accelerator. It is also likely that this class of accelerators will be useful for making "table top" accelerators of a few tens of MeVs, but not for making high energy accelerators.

The increase of laser peak power, now TTT lasers are readily available, makes it reasonable to re-examine 1/4 wave acceleration. This was discarded many years ago—except in astrophysical situations—but may now be of interest for some terrestrial applications. A petawatt laser, now under construction at Livermore, will give 600 MeV to electrons, in 2 mm, when focused to a spot size of 18 μm. Also, these powerful new lasers, make IFELs, ICAs, ICARMs all very interesting for compact (cheap and reliable?) 100 MeV accelerators.

The possibility of collective acceleration has been re-visited by the Moscow Radio-Technical Group [17]. They have

realized that we now, with many decades of experience with moving ponderomotive wells, can control the blobs of electrons, in which ions are imbedded, to a much higher degree than anyone even contemplated in the 60's. The theoretical analysis is quite advanced and one can expect experimental work to be initiated sometime soon. It will be most interesting to see if, now, we can achieve some of the goals that were defined back in the 60's, but never realized. In fact, one can envision a renaissance of activity on collective accelerators.

Beam Handling and Conditioning

The ability to handle particles and to measure the properties of beams of particles is ever-improving. This was demonstrated, still again, by the very impressive recent results at the FFTB at SLAC [18]. The vertical beam size was made to be, and then measured at, 75 nm. This is a factor of ten decrease over that obtained at the SLC. Measuring this small size is no mean feat for the beam size is much smaller than the wavelength of light. In fact, despite this, it is light that is used to do the measurement, by developing an interference pattern and then using the Compton scattering of photons in the pattern to obtain a visible pattern (taken on a CCD) that discloses the beam size.

A proposal to much improve stochastic cooling of beams, by increasing the frequency from a few GHz to optical frequencies has been made [19]. The concept is no different from the usual one, but the pick-ups and the kickers are now undulators. Experimental study is now under way at LBL.

Laser cooling of stored ion beams has made very large progress in the last few years, both at TSR (Heidelberg) and at Astrid (Aarhus) [20]. In fact these groups have reached longitudinal temperatures of about 1 mK, corresponding to $\Delta p/p$ of 4×10^{-7}, which is two orders of magnitude better than had been achieved by electron cooling. Now, a new technique in electron cooling (adiabatic field expansion) has, once again, made electron cooling competitive. However, there are new laser cooling technques in theoretical study, as well as suggestions for how to extend the technique to transverse directions [21]. I believe we can expect, in the years ahead, significant developments in stored ion cooling.

The concept of beam conditioning; i.e., introducing correlations between particle energy and amplitude, was introduced some years ago [22]. Since that time there have been a number of theoretical papers either expanding on the idea, or suggesting alternate ways of achieving the same desired end. None of these schemes have been tried experimentally, but the promise of conditioning is so high that, sooner or later, experiments can be expected to be performed.

Exotic Colliders

There are two new colliders which have received considerable attention in recent years. The first is a mu meson - mu meson collider, first analyzed by David Neuffer [23] and the second is a gamma ray - gamma ray collider (along with the variant of an electron-gamma ray collider) advocated through the years by Valery Telnov [24]. The physics motivation for these colliders is something that can't be gone into here, but it is significant.

The μ-collider must, of course do everything within the lifetime of μ meson, which is only $2.2\gamma\,\mu s$ for a meson having relativistic factor γ. This brief time limits design in many ways, for example it is easy to show that a meson only makes a few hundred revolutions in a ring (independent of its energy and only dependent upon the average magnetic field in the ring). Nevertheless, a colliding ring would enhance luminosity, over a single collision, by a factor of a few hundred.

The μ mesons are produced, most efficiently, by π decay, and are thus rather dilute in phase space; cooling is required. To this end, ionization cooling (that is, cooling by energy loss due to ionization), while maintaining a very tight focus on the beam, appears to be the only possibility. Notice that this cooling mechanism is particularly suitable for μ mesons which have very little nuclear cross sections. Experimental study of this cooling mechanism, which is the primary untested element of a μ-collider, is planned for the future.

A γ-γ collider was first proposed by the Novosibirsk Group, in the early 80's, and now, with the advent of powerful lasers and the increasing reality of linear colliders, is taken seriously by most everyone. Unlike a μ-collider, a γ-collider does not require a major investment (many billions of dollars for a TeV-class μ-collider), but only a few tens of millions of dollars (in addition to the billions that an e^+-e^- collider will require in any case). The major development problem, besides the introduction of the laser beam into a conversion region very close (a few cm) from the interaction point, in a manner that will still allow detection of the reaction particles and yet survive the debris of collisions, is the development of the laser itself. Conventional lasers are already powerful enough; that is the peak power is adequate to have one gamma ray made by Compton back-scatter for each electron in a bunch. Conventional lasers do not, however, have an adequate pulse repetition rate; i.e., the average power is far too low. Free electron lasers (FEL) on the other hand, would seem to be able to supply the average power (although it is far in excess of that from any operating FEL), but fall short of the peak power requirement. However pulse compression techniques are available. Work on the laser is clearly required, but the concept seems not to have any "show stoppers", and one can expect future e^+-e^- colliders to have, from their very first day, γ-γ collider capability.

Conclusions

In this brief paper, I have presented some of the more significant advances made, during the last few years, in novel accelerator concepts; I think the reader will agree with me

that good progress is being made. In fact, although it is now just 12 years since the first Workshop in the Series on Advanced Accelerator Concepts was held [25], it is quite remarkable that new ideas are still coming forward at a rate that shows no diminution with time. In addition, and perhaps this is less remarkable, but certainly as important—maybe more so—good progress continues to be made in developing the "old ideas" both in theoretical analysis and, most importantly, in experimental advances. The "old ideas" are standing the test of time, while new ideas are being put forward at an undiminished rate. The field is a long way from being morbid; it is, in fact, I think the reader will agree, very vibrant: we can expect it to go on for a very long time.

References

1. *Advanced Accelerator Concepts,* A.M. Sessler & P. Schoessow, ed, AIP Conf. Proc. (to be published).
2. *Advanced Accelerator Concepts*, J.S. Wurtele, ed, AIP Conf. Proc. **279** (1993).
3. J.S. Wurtele, "Advanced Accelerator Concepts", *Physics Today* **47**, 33 (July 1994).
4. T. Katsouleas, "Advanced Accelerator Techniques", to be published in the Proc. of the EPAC Conference, 1994; A.M. Sessler, "New Particle Acceleration Techniques", *Physics Today* **41**, 26 (January 1988).
5. J. Dawson and T. Tajima, Phys. Rev. Lett. **43**, 267 (1979).
6. C.E. Clayton, *et al*, Phys. Rev. Lett. **70**, 37 (1992).
7. M. Everett *et al*, Nature **368**, 527 (1994).
8. K. Nakajima *et al*, "Proof-of-Principle Experiments of Laser Wake-Field Acceleration", Institute of Fusion Studies Report #659 (1994), submitted to Phys. Rev. Letters.
9. G. Hirapetain *et al*, Phys. Rev. Lett. **72**, 2403 (1994).
10. J.S. Fraser & R.L. Sheffield, IEEE, QE-23, 9, 1489 (1987).
11. E. Chevallay, *et al,* Nucl. Inst. and Methods in Phys. Res. A, **340** 146 (1994).
12. W. Lawson, *et al*, Phys. Rev. Lett. 67, 520 (1991).
13. G. Westenskow and T. Houck, "Results of the Reacceleration Experiment: Experimental Study of the Relativistic Klystron Two-Beam Accelerator Concept", submitted to Proceeding of the 10th International Conference on High Power Particle Beams (Beams '94).
14. D. Umsteadter, E. Esarey and J. Kim, Phys. Rev. Lett. **72**, 1224 (1994); Ostovsky, Nucl. Inst. and Methods in Phys. Res. A, 401 & 410 (1994).
15. B.I. Ivanov *et al*, *Proc of the XV Inter. Conf. on High Energy Accelerators, Hamburg, 519 (1992).*
16, W. Kimura, private communication, to be published in the *Proc. of the Advanced Accelerator Concepts, Lake Geneva, WI (1994).*
17. A.I. Dzergach, Europhysics Letters **21**, 821 (1993).
18. See the cover and the article in *Physics Today* **47**, 22 (July, 1994).
19. A. Zholents and M. Zolotorev, Lawrence Berkeley Laboratory Report #35469 (1994).
20. S. Schroeder *et al*, Phys. Rev. Lett. **64,** 2901 (1990); J.S. Hangst *et al*, Phys. Rev. Lett. **67**, 1238 (1991).
21. H. Okamoto, A.M. Sessler and D. Mohl, Phy. Rev. Lett. 72, 3977 (1994).
22. A.M. Sessler, D.H. Whittum, and L-H Yu, Phys. Rev. Lett. **68,** 309 (1992).
23. D. Neuffer, Part. Accel. **14**, 75 1983); D. Cline *et al*, A series of papers resulting from the Mu-Mu Collider Workshop, NapaValley, 1992, to be published in Nucl. Instrum. and Methods in Phys. Res. A; and R. Palmer—private communication.
24. V. Telnov, Nucl. Instrum. and Methods in Phys. Res. A 294, **72** (1990); A.M. Sessler and S. Chattopadhyay, ed., *Proc. of the Workshop on Gamma-Gamma Colliders, March 1994*, to be published in Nucl. Instrum. and Methods in Phys. Res. A.
25. *The Laser Acceleration of Particles*, P.J. Channell, ed, AIP Conf. Proc. **91** (1982).