LBNL-XXXXX

ERNEST ORLANDO LAWRENCE
BERKELEY NATIONAL LABORATORY

Data Center Economizer Cooling with Tower Water; Demonstration of a Dual Heat Exchanger Rack Cooling Device

H.C. Coles, S. Greenberg

Environmental Energy Technologies Division

November 2012

DISCLAIMER

This report was prepared as the result of work sponsored by the California Energy Commission. It does not necessarily represent the views of the Energy Commission, its employees or the State of California. The Energy Commission, the State of California, its employees, contractors and subcontractors make no warrant, express or implied, and assume no legal liability for the information in this report; nor does any party represent that the uses of this information will not infringe upon privately owned rights. This report has not been approved or disapproved by the California Energy Commission nor has the California Energy Commission passed upon the accuracy or adequacy of the information in this report.

ACKNOWLEDGEMENTS

This work was supported by the California Energy Commission's Public Interest Energy Research program and by the Assistant Secretary for Energy Efficiency and Renewable Energy, Building Technologies Program, of the U.S. Department of Energy under Contract No. DE-AC02-05CH11231.

Special thanks to the key partner, APC by Schneider Electric, for providing equipment and technical support for this project; specific appreciation to APC's John Bean, Gordon Dong, and Xindi Cai.

Thanks to SynapSense for providing the wireless sensor and database system, with special thanks to Patricia Nealon, Ray Pfeifer, Jeff Fitch, and Mathew Kay.

Colleagues from Lawrence Berkeley National Laboratory were instrumental with project development, installation, test design, operational support, and final reporting. Thanks to William Tschudi, Dale Sartor, Ed Ritenour, and Mike Magstadt. Thank you to Karen Schafter, Susan James, and Ted Sopher for network and other application support.

Special thanks to Prajesh Bhattacharya for the design, setup, and ongoing support of a data collection system used to store and support queries for the majority of the measurement data collected.

ABSTRACT

A prototype computer equipment rack-level cooling device with two heat exchangers was demonstrated to illustrate an energy efficient cooling capability. This unique device was designed and constructed by APC by Schneider Electric to operate with higher-temperature cooling water, so that it can support many more hours of free cooling compared to traditional systems that utilize chilled water. The cooling system contained two separate air-to-water heat exchangers, rather than one usually found in similar devices that operate using chilled water. In this design, one heat exchanger was configured to use higher temperature water produced by a cooling tower alone. The other coil was configured and controlled to allow chilled water flow, should supplemental cooling be required. The device also contained three fans, which were used to pull warm air from the computer equipment exhaust area through the two heat exchangers and return the cooled air to the air intake area of the computer equipment.

A model of the heat exchangers' performance was developed and used with an industry standard energy-efficiency metric to explore the device's capabilities and efficiency

The device effectively cooled the warm air from the exhaust of the computer equipment and had favorable energy use efficiency and capability when compared to other similar equipment. In this analysis, the concept of using two heat exchangers in the intended configuration is more energy efficient, compared to typical designs using a single heat exchanger. The high cooling performance of this device is able to meet cooling requirements while using higher-temperature water, thereby reducing energy needed for compressor-based cooling. Results suggest that the development of a production version be continued using the design concepts of this prototype.

Keywords: IT equipment cooling, server rack cooling, server cooling, datacenter cooling, computer equipment cooling, close-coupled rack cooling

TABLE OF CONTENTS

Acknowledgements ii
ABSTRACT iii
TABLE OF CONTENTS v
EXECUTIVE SUMMARY 1
Introduction 1
Purpose 1
Objective 1
Conclusions and Recommendations 2
CHAPTER 1: Introduction 3
Demonstration Configuration 3
Device Description 5
CHAPTER 2: Project Methods 7
Evaluation Process 7
Installation 7
Test Plan and Collected Data 8
Model Development 10
Air Flow Rate Estimation 11
Heat Exchanger Model Development 12
Identifying a Cooling Water Efficiency Model 13
Metric Identification and Calculation 13
Hypotheses Investigated 14
CHAPTER 3: Results 15
CHAPTER 4: Conclusions and Recommendations 21
References 23
Glossary 24
APPENDIX A: Air Flow Rate Calculation Method 1
APPENDIX B: Heat Exchanger Model Development 1
APPENDIX C: Measured vs. Estimated Heat Exchanger Performance 1

EXECUTIVE SUMMARY

Introduction

A number of devices used to cool rack-mounted computer equipment were introduced in the last several years. Demonstrations of various cooling technologies were previously supported by the California Energy Commission's Public Interest Energy Research (PIER) program and presented in two Silicon Valley Leadership Group Data Center Summit conferences. These demonstrations are commonly known as "Chill-Off 1" and "Chill-Off 2" and were hosted by Oracle Corporation (previously Sun Microsystems) in Santa Clara, California. These demonstrations involved 11 close-coupled rack-level cooling systems. Following the Chill-Off demonstrations, Lawrence Berkeley National Laboratory held discussions with APC by Schneider Electric, and the idea of developing an in-row cooling device that could operate with higher temperature coolant was developed.

This report documents the demonstration of that new prototype cooling device, evaluated during 2011 and 2012 in a Lawrence Berkeley National Laboratory data center. The prototype was similar in many respects to one class of cooling devices tested in the Chill-Off demonstrations, but this design was unique in that it contained two, larger air-to-water heat exchangers, compared to smaller, single heat exchangers commonly found in the similar devices tested as part of the earlier demonstrations.

This report presents the evaluation and test results of this unique dual heat exchanger cooling device. The prototype device was provided as a cost share by the original equipment manufacturer. The device had various design features but is primarily what can be termed "close-coupled" from a heat transfer point of view. *Close-coupled* means the heat exchanger transferring the heat from the exhaust area of the rack-mounted equipment is within a few feet of the rack-mounted equipment and includes containment or is close to the heat source, to reduce air mixing. This device is designed to use water produced solely by a cooling tower (and, when needed, chilled water for supplemental cooling) to transfer heat from the rack-mounted electronic equipment exhaust air to the building cooling water systems.

Purpose

The purpose of this demonstration was to evaluate the energy efficiency of a prototype cooling solution and inform data center professionals of potential low-energy cooling solutions. The heat removal capacity of this device was studied, and the results were compared to more traditional, commercially available, modular devices used to cool rack-mounted computer equipment.

Objective

The primary objective of this demonstration was to show how an in-row cooling device using higher-temperature cooling water could provide sufficient cooling for IT equipment, eliminating the need for compressor-based cooling. The device was thermally evaluated and its energy use compared for various scenarios. The demonstration investigated how energy efficiency performance varied as a function of cooling water supply temperatures, cooling water flow rates, and cooling unit air flow rate.

A variety of operating conditions were monitored and used to develop a model to estimate results typically found in data centers. The model was used to compare energy efficiency of different combinations of cooling tower and chilled water flow rates, and to compare the performance to results of previously evaluated systems.

Energy-efficiency performance was estimated using a chiller plant model that included a water-side economizer. This model estimated the electrical energy required to generate the tower water and chilled water supplied at different flow rates and temperatures. *Tower water* refers to cooling water supplied using the cooling tower only, eliminating the need for compressor cooling. The plant model provides for a straightforward calculation of the metric "partial power usage effectiveness (pPUE)," as defined by The Green Grid, an industry consortium focused on facilitating energy efficiency in IT equipment and data centers. The pPUE metric is used to evaluate the energy use efficiency of a single or targeted set of energy use components, compared to standard PUE, which evaluates all energy uses associated with a data center.

Conclusions and Recommendations

The prototype dual heat exchanger, close-coupled IT equipment cooling device was successfully demonstrated, and showed the advantages of using higher-temperature water to cool IT equipment. This included an evaluation of its energy efficiency and a comparison to previously evaluated systems.

The evaluation of this unique dual heat exchanger design revealed or supported the following:

- Using warmer water supplied from a cooling tower for computer room cooling solutions can provide energy efficiency improvements on the order of 30 to 50 percent, compared to water supplied using compressor-based cooling.
- Fan energy may be a leading contribution to reduced overall efficiency at high air flow rates. For this type of system, heat exchanger air flow restriction, fan selection, and controls should be primary mechanical design considerations when trying to reduce fan energy requirements.
- The prototype cooling unit compared favorably to similar devices previously evaluated in a past PIER demonstration project. The comparison indicates that a 20 to 30 percent improvement in pPUE may be possible, compared to a single heat exchanger configuration.

The prototype device showed energy efficiency advantages, as well as installation and configuration flexibility. Results suggest that the development of a production version using the design concepts found in this prototype be continued.

CHAPTER 1: Introduction

In recent years, designers have introduced a number of new approaches to cooling Information Technology (IT) equipment in data centers. Many of these designs promise improved energy efficiency compared to conventional methods such as raised-floor-plenum cold-air delivery provided by computer room air handlers. This project's goals were to evaluate the heat removal capacity and energy efficiency of a unique rack-level, close-coupled, prototype cooling device. The device is unique in that instead of the one heat exchanger (hex) typically found in similar devices, it has two separate heat exchangers. The researchers collaborated with APC by Schneider Electric, the company that provided the prototype cooling device used for evaluation. The device was installed and evaluated in a data center located at and operated by Lawrence Berkeley National Laboratory (LBNL).

The project used a variation of the common data center industry energy metric PUE™ to evaluate the device. The variation is commonly referred to as partial PUE (pPUE). Partial PUE is similar to PUE but includes only a subset of the energy use components typically included in a full PUE calculation.

Demonstration Configuration

The cooling device tested was designed for use inside a data center, as part of an air containment and cooling system for rows of rack-mounted IT equipment. The typical layout, and that used for this evaluation, is shown in Figure 1-1. As shown, the cooling device is located in a row of IT equipment racks. It is referred to by APC as an InRow™ cooler; this report will hereinafter refer to it as a "unit" or "cooling unit."

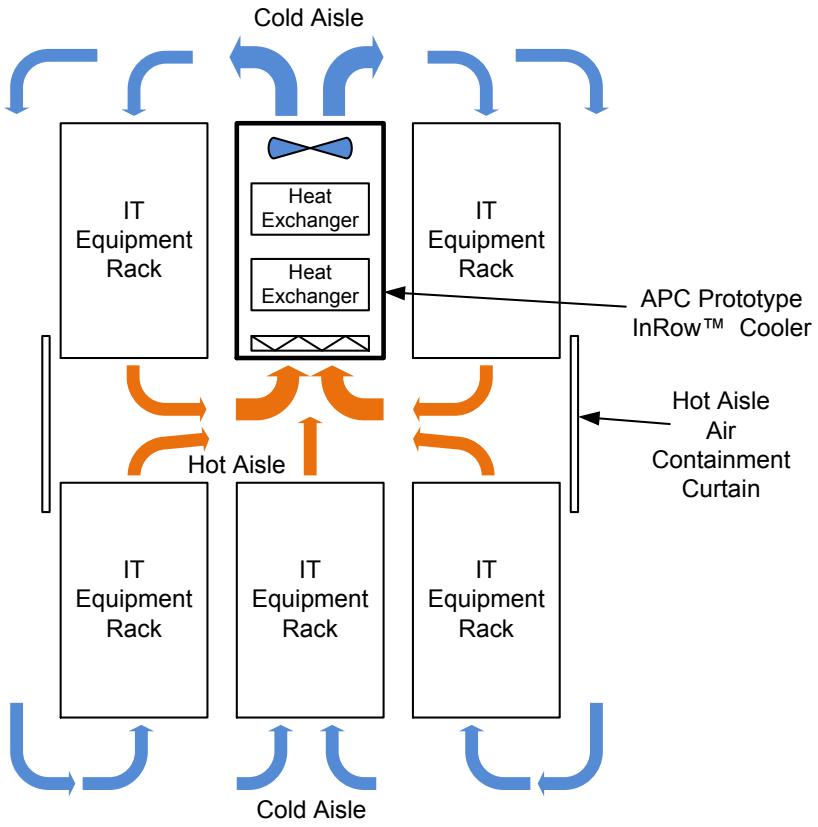

Figure 1-1: Demonstration Layout (plan view) for Prototype InRow™ Cooling Unit

Device Description

Figure 1-2 shows the thermal design concept. The device contains two identical air-to-water heat exchangers. Each can be connected to a separate set of cooling water supply and return connections. The first hex in the air flow is cooled using higher temperature water supplied from a cooling tower. Water for the second hex cooling water, referred to as *chilled water*, is supplied from a chiller. The device contains three internal fans, which are used to pull air through both hexes. The air is filtered and air flow controlled by adjusting the fan speed to match what the IT equipment requires. The fan speed is controlled by temperature sensors located at nearby server air inlet areas.

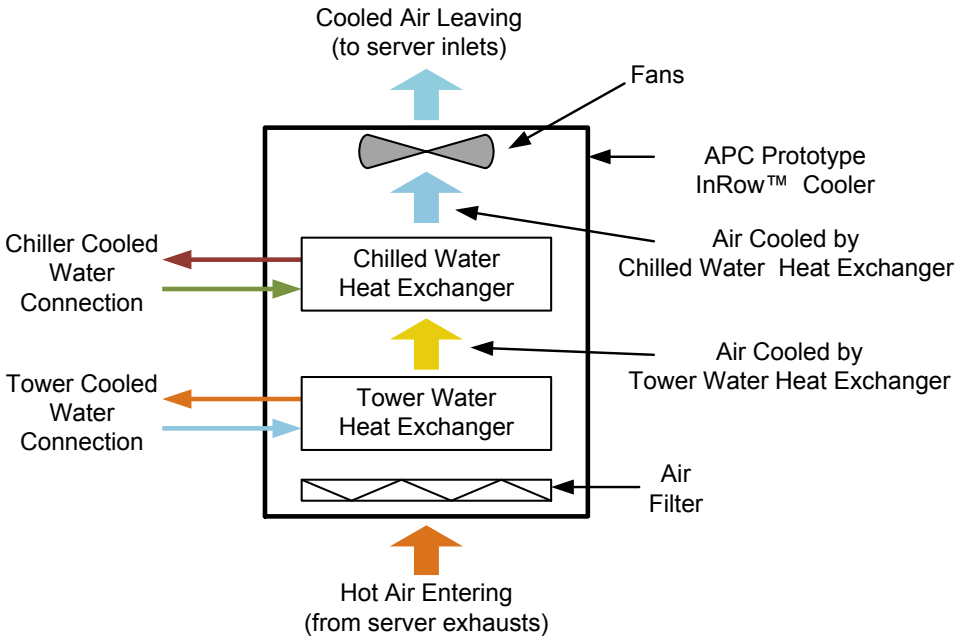

Figure 1-2: Prototype InRow™ Cooling Unit Internal Flow Schematic

Figure 1-3 shows the prototype cooling unit that was installed for evaluation.

Figure 1-3: Prototype InRow™ Cooling Unit Installed at Lawrence Berkeley National Laboratory for the Demonstration

CHAPTER 2:
Project Methods

Evaluation Process

This project's primary goal was to evaluate the energy use efficiency of this unique thermal design when using higher temperature water for cooling IT equipment. The following process was used for testing, data evaluation, and reporting the final results:

1. Install the device in LBNL's data center with the required, plumbing, electrical supply, and data collection
2. Develop and execute a test plan and record data while varying thermal and energy-related parameters
3. Develop a heat exchanger effectiveness model based on the collected data
4. Identify a cooling water production efficiency model
5. Identify an industry metric for evaluations and comparisons
6. List hypotheses
7. Test hypotheses and present results

Installation

The unit was installed in a production (research and administration) data center located at Lawrence Berkeley National Laboratory in Berkeley, California. It was placed in a row of racks that were populated with IT equipment being used in production, to provide the IT equipment heat load to demonstrate the cooling unit's heat removal capacity and efficiency.

The data center was not equipped with hot aisle or cold aisle full containment, but curtains were added for this demonstration, to reduce local hot aisle/cold aisle air mixing and provide a higher return temperature than would otherwise occur. The typical hot side air supply temperature range was 80°F to 95°F (26.7°C to 35°C). The hot and cold side air temperature measurements at the front (intake) and rear (exhaust) of the cooling device were recorded using a wireless monitoring network. The data for three measurement locations (top, middle, bottom) on each side inlet (hot) and exhaust (cold) were collected and stored in a database for later analysis.

There were three types of equipment used for data collection:

- Electrical Power Measurement: ION Power Meter Model 6200, Schneider Electric
- Air Temperature Measurements: Synapsense Env. Monitoring, Synapsense Corporation
- Thermal Energy Flow Rate of Cooling Water: ONICON System-10 BTU Meter, Onicon Inc.

The heat exchanger configured to use tower water was connected to the tower water supply system located under the data center's raised floor. The tower water supply temperature did not vary considerably and was typically close to 68°F (20°C). An ONICON "Btu" metering system was installed to sense the water flow rate, supply, and return water temperatures and to calculate kilowatts (kW) of heat transfer. The ONICON system was connected to a local Modbus network, and the data was recorded in a database at 30-second intervals.

The heat exchanger configured to use chilled water was connected to the chilled water supply system located under the data center floor. The chilled water supply temperature did not vary appreciably and was typically close to 45°F (7.2°C). An additional ONICON system sensing the same parameters as for the tower water heat exchanger was connected to the same local Modbus network, and the data were recorded in a database at 30-second intervals.

The unit required electrical power for three fans with electronically commutated (ECM) motors, unit controls, and a visual display. The power required was approximately 1 kW for each fan as measured at full speed using an ION model 6200. The ION meter was also connected to the local Modbus, and the data stored in a database for analysis.

Test Plan and Collected Data

The following parameters were recorded (refer to Figure 2-1 for a schematic):

- Tower Water Supply Temperature (°F) [ONICON Meter]
- Tower Water Return Temperature (°F) [ONICON Meter]
- Tower Water Flow Rate in gallons per minute (gpm) [ONICON Meter]
- Tower Water Heat Exchanger Heat Transfer Rate (kW)
- Chilled Water Supply Temperature (°F) [ONICON Meter]
- Chilled Water Return Temperature (°F) [ONICON Meter]
- Chilled Water Flow Rate (gpm) [ONICON Meter]
- Chilled Water Heat Exchanger Heat Transfer Rate (kW) [ONICON Meter]
- Electrical Power Consumed by the Unit (kW) [ION Meter]
- Intake (hot) Air Temperature (top at back of unit) (°F) [Synapsense]
- Intake (hot) Air Temperature (middle height at back of unit) (°F) [Synapsense]
- Intake (hot) Air Temperature (bottom at back of unit) (°F) [Synapsense]
- Exhaust (cool) Air Temperature (top at front of unit) (°F) [Synapsense]
- Exhaust (cool) Air Temperature (middle height at front of unit) (°F) [Synapsense]
- Exhaust (cool) Air Temperature (bottom at front of unit) (°F) [Synapsense]

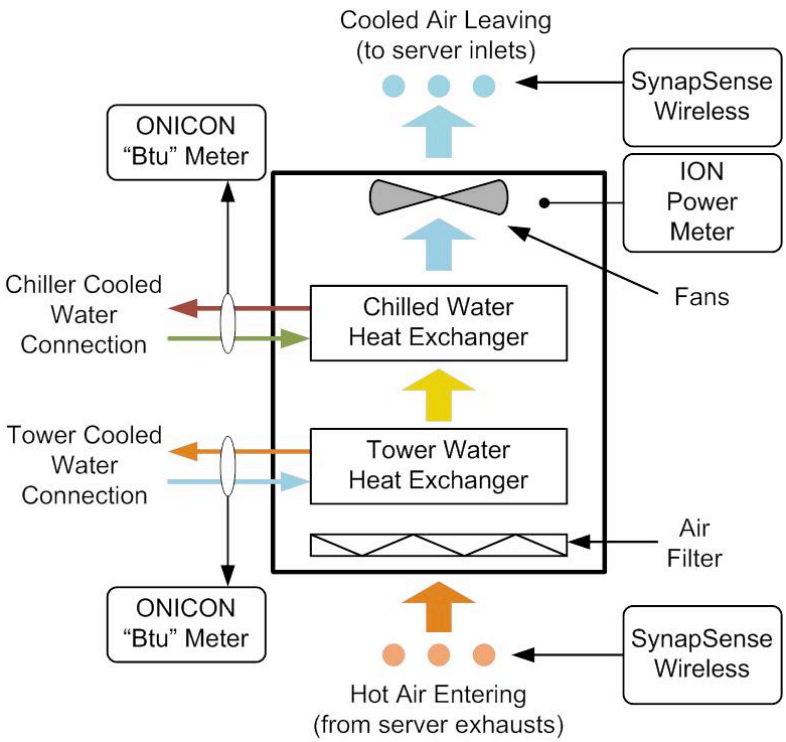

Figure 2-1: Data Collection Schematic

To evaluate the heat exchanger thermal performance, the researchers obtained data for the parameters in Table 2-1, 2-2, and 2-3.

Table 2-1: Test Plan for Single Heat Exchanger Used – Tower Water Supplied

Test Description	Tower Water Flow Rate (gpm)	Chilled Water Flow Rate (gpm)	Unit Fan Speed
Tower Water Heat Exchanger Only	12, 24	0 (valve off)	Low
			Medium-Low
			Medium
			Medium-High
			High

Table 2-2: Test for Single Heat Exchanger Used – Chilled Water Supplied

Test Description	Tower Water Flow Rate (gpm)	Chilled Water Flow Rate (gpm)	Unit Fan Speed
Chilled Water Heat Exchanger Only	0 (valve off)	20	High
		16	Med-High
		14	Medium
		11	Medium-Low
		11	Medium-Low
		9	Low
		5	Low
		5	Medium-Low
		5	Medium
		5	Medium-High
		5	High

Table 2-3: Test for Automatic Operation – All Heat Exchangers Used (Tower Water and Chilled Water Supplied)

Test Description	Tower Water Flow Rate (gpm)	Chilled Water Flow Rate (gpm)	Unit Fan Speed
Tower and Chilled Water Heat Exchangers Activated Automatic Operation	24	10	High
	24	9	Med-High
	23	7	Medium
	23	5	Medium-Low
	23	4	Low
	23	4	Low
	23	4	Low
	23	11	High
	23	3	Low
	23	11	High
	23	11	High

The data were stored in databases and downloaded in the form of comma delimited value (.csv) text files. These files contained time-stamped records for the recorded parameters.

The five fan speeds are selections from a menu provided as part of the cooling unit control system. The water flow rates tested for the tower-water-heat-exchanger-only test (Table 2-1) were 12 and 24, selected to gather performance data for high water flow rates. There were four target water flow rates for the chilled-water-heat-exchanger-only tests. Five of these tests were manually controlled to 5 gpm in order to obtain performance information at a low water flow rate.

Model Development

To predict the capability and performance of the cooling unit at additional operating conditions that were not tested, a mathematical model of thermal performance for the heat exchanger was required. Heat exchanger performance information was not available for the InRow™ unit

being tested, therefore measurements were taken that enabled a thermal performance model of the heat exchanger to be created for this investigation.

Fortunately, heat exchanger design and performance has been studied extensively, and it is possible to use available concepts to support the creation of a useable mathematical model covering a wide operating range by analyzing data from a relatively small number of measurements. These concepts were used in this investigation.

The following process was used to convert measured data into the final performance metrics. Additional information on the air flow rate calculation method and heat exchanger model development is provided in Appendices A and B, respectively.

1. The research team estimated air flow rate for each of five fan speeds. These were needed to develop the heat exchanger performance model.
2. The team developed a heat exchanger mathematical model that uses measured heat exchanger effectiveness for a given air inlet (server exhaust) temperature, air flow rate, cooling water supply temperature, and cooling water supply flow rate.
3. The study used a model that estimated the electrical energy required to produce cooling water as a function of the cooling water supply temperature.
4. The models above were used to investigate metrics and configurations of interest for evaluation, comparison, and discussion.

Air Flow Rate Estimation

The cooling unit air flow rate was variable with control software or manual mode selection of five speed settings (high, medium-high, medium, medium-low, and low). The heat exchanger model development required the mass flow rates of each fluid (water and air) to be known for each test. The mass flow rate of the water for each test is relatively easy to obtain, as this requires only a liquid flow meter inserted into the water supply circuit for each heat exchanger, and this was provided by the ONICON metering devices mentioned above. However, measuring air flow rate with high accuracy is not nearly as easy, for this situation, without expensive and bulky laboratory equipment. Therefore an estimate of air flow rate was obtained using an energy balance.

The energy balance method of estimating air flow required knowledge of the:

- heat transfer rate for the cooling water, as measured by the ONICON metering data, and
- air temperatures entering and exiting the heat exchanger.

Note: There were accuracy issues with this approach. The average of temperatures measured on each side (in this case three per side) may not have corresponded to the effective temperature for a number of reasons, including:

- the number of air temperature sensors may not have been adequate to measure the true average, and
- the air mass flow rate and direction may have varied across the inlet and exit measurement planes relative to where the air temperature sensors were located.

The operational and environmental variability in the data center area used for these tests was considerable. For example, IT equipment load changes and/or service actions produced data that showed a large air temperature difference from highest to lowest at the intake (hot) side. In some cases, this was 8°F (4.4°C) or more. In an attempt to improve air flow estimates, large data sets were filtered with software to provide a subset of the data that showed a small (within 1 or 2 degrees Fahrenheit) air temperature range across the three sensors on the input (hot) side. See Appendix A for additional information.

Heat Exchanger Model Development

A mathematical model for the heat exchanger thermal performance was needed to evaluate performance of parameter combinations not tested. A model was developed using the methods described in Appendix B. Figure 2-2 presents the heat exchanger mathematical model results in a format commonly supplied by heat exchanger manufacturers for the purpose of original equipment manufacturer thermal product development.

In Figure 2-2 watts per inlet temperature difference (watts/ITD °C) is shown on the "Y" axis. This is a common heat exchanger performance metric. When the fluid flow rates and inlet temperatures are known, the heat transfer rate can be determined by using a chart such as shown in Figure 2-2. The detail description for watts / ITD (°C) is: heat watts transferred per the inlet temperature difference (ITD) in degrees Centigrade. The inlet temperature difference is calculated by subtracting the temperature in °C of the entering cold fluid from the temperature in °C of the entering fluid being cooled (hot fluid). In this case, the flow rate for air is indicated in cubic feet per minute (cfm) and the water flow rate in gallons per minute (gpm).

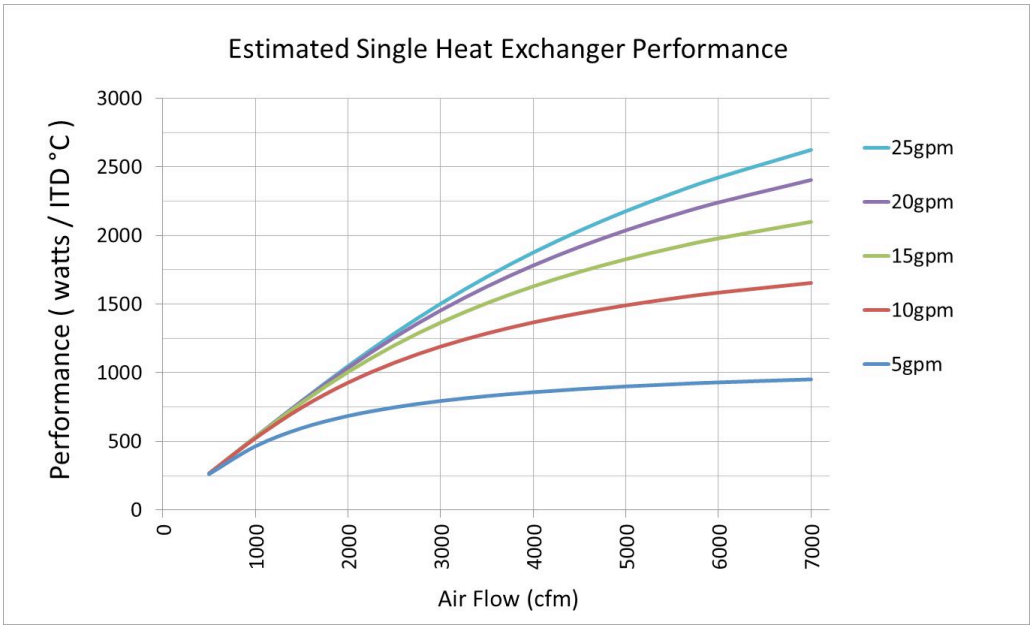

Figure 2-2: Single Heat Exchanger Heat Transfer Performance Model Results.

Appendix C presents a comparison of the measured and estimated heat transfer rate using the relations in Figure 2-2. The measured data were obtained from individual heat exchanger tests. The tower water and chilled water heat exchangers have the same construction.

Identifying a Cooling Water Efficiency Model

A chilled water plant model used for this evaluation was developed for and used in the previous PIER Project: the "Chill-Off 2." The report, *Demonstration of Rack-Mounted Computer Equipment Cooling Solutions* (Coles 2014). The model used in the "Chill-Off 2" study had four option combinations from two parameters with two selections: with and without a water-side economizer and including or not including the electrical energy required for cooling water pumping. The analysis in this report looked at a design with a water-side economizer and including electrical energy for pumping.

Metric Identification and Calculation

The partial PUE (pPUE) evaluation method developed by The Green Grid is used in this study for evaluating efficiency and alternative configurations.

Energy used by the device being tested and for the production of the cooling water are the only energy components used in pPUE evaluations for this study. Other components that would be included in a complete PUE evaluation—such as lighting, other cooling devices, or power distribution infrastructure—are ignored for this analysis.

The component definitions included for the pPUE variation used for energy use efficiency calculations are as follows:

- $Power_{IT\ Equipment}$: Electrical power provided to the IT equipment
- $Power_{Chilled\ Water}$: Electrical power to produce Chilled water per the plant model
- $Power_{Tower\ Water}$: Electrical power to produce Tower water per the plant model
- $Power_{Unit}$: Electrical power provided to the Unit

The Equation for pPUE is presented below.

$$pPUE = (Power_{IT\ Equipment} + Power_{Chilled\ Water} + Power_{Tower\ Water} + Power_{Unit}) / Power_{IT\ Equipment} \quad \text{(Equation 2-1)}$$

The power required to produce the Chilled Water and/or Tower Water is calculated by using the heat exchanger model to determine the flow rate and return temperature for each fluid combined with the plant model. The flow rate and return temperature is converted to tons of cooling required. The kilowatt/ton efficiency to produce the cooling water is obtained from the plant model using the water supply temperature as the input. Multiplying kilowatts/ton by the tons of cooling required results in the power needed to produce the cooling water.

The analysis was completed using a server thermal behavior of 100 cubic feet per minute (cfm)/kW. This corresponds to a 32°F (17.8°C) air temperature rise across the IT equipment. Some recently designed servers may have higher temperature rise values. A server air inlet temperature (SAIT) of 72°F (22.2°C) was used for the analysis. Higher SAITs may be used in some data centers, and this is encouraged, but many data centers are operating using these conditions. The reader is encouraged to do a similar analysis using other data center environmental conditions and IT equipment thermal behavior.

Hypotheses Investigated

An infinite number of parameter combinations and configurations could be considered for comparison or analysis, so to provide some focus, the following hypotheses were proposed and addressed:

- A cooling unit with two heat exchangers with separate cooling water feeds is more energy efficient than a unit with only one.
- There are efficiency advantages of two heat exchangers connected to tower water over only one heat exchanger connected to tower water.
- The dual heat exchanger cooling unit tested compares favorably to similar units tested in a previous PIER demonstration.
- The power used by the cooling unit, mostly fan power, is significant to energy efficiency.

CHAPTER 3:
Results

Hypothesis 1: A cooling unit with two heat exchangers with separate cooling water feeds is more energy efficient than a unit with only one.

A typical data center has only chilled water available for cooling devices, produced using compressor-based cooling. Many data centers could have chilled water and tower water, or just tower water, available for cooling devices if equipped with a water-side economizer. In these cases a dual heat exchanger design allows tower water to be used to meet cooling requirements before any chilled water is used. Using only tower water will satisfy the cooling requirements for most conditions, depending on IT equipment SAIT set points and outside environmental conditions.

The hypotheses were addressed, in part, using the plot shown in Figure 3-1 where four configuration cases are plotted (pPUE versus IT equipment power) using the following constraints:

- Server air inlet temperature is 22°C (72°F)
- Server air flow rate as a function of server power used is 100 cfm/kW
- Tower Water is held constant at 20°C (68°F)
- Chilled Water is held constant at 7.2°C (45°F)
- Heat exchanger water flow rate maximum is 24 gpm.

Case 1: Original Design Concept – The upstream heat exchanger is supplied with tower water, and the downstream heat exchanger uses chilled water as needed to meet the SAIT requirement.

Case 2: Both Heat Exchangers Use Tower Water – This option could be considered if the use of tower water only can meet all of the cooling requirements.

Case 3: One Heat Exchanger uses only Tower Water

Case 4: One Heat Exchanger uses only Chilled Water

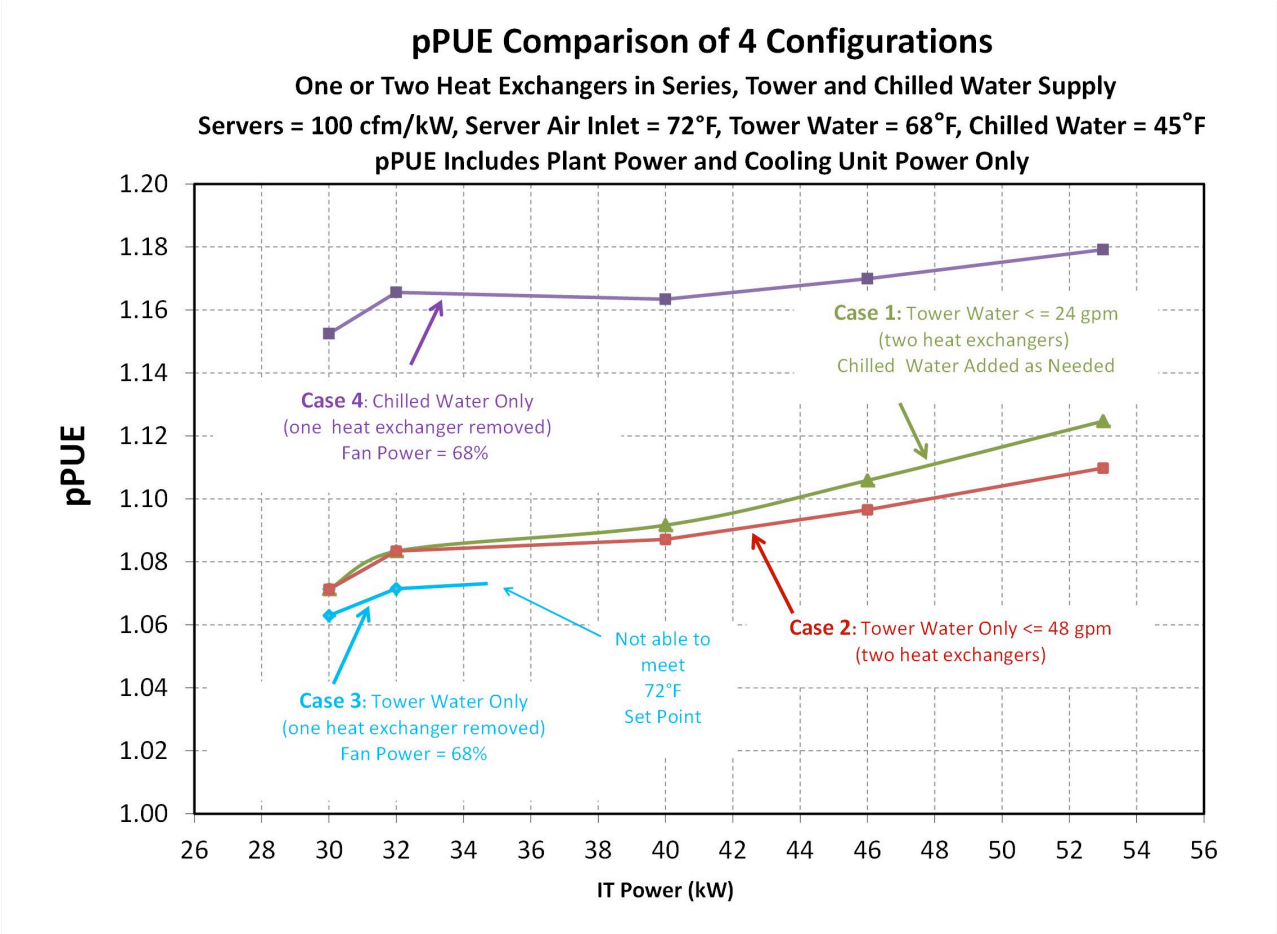

Figure 3-1: Energy Use Comparison of Four Water Cooling Configurations

To see if there is a significant energy efficiency advantage when using Tower Water compared to Chilled Water, the research team analyzed a configuration using one heat exchanger.

To test the hypothesis, the pPUE was calculated using the chiller plant model and plotted in Figure 3-2 for just two cases (tower water only or chilled water only) using the following constraints:

- Server air inlet temperature is 22°C (72°F)
- Server air flow rate as a function of server power used is 100 cfm/kW
- One heat exchanger used
- Heat exchanger water flow rate is 23 gpm.

Figure 3-1 also contains plots of tower water only and chilled water only (Case 3 and Case 4) plotted with other configurations.

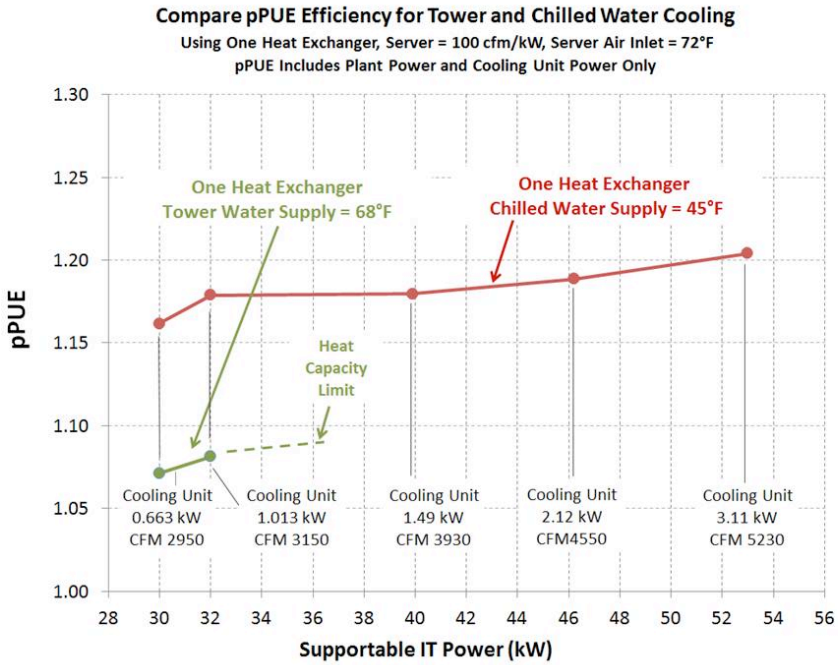

Figure 3-2: Energy Efficiency Comparison of Using Tower Water and Chilled Water

For each of the five fan speed settings and corresponding air flow rate in cubic feet per minute, the IT equipment power is adjusted using the model until the air exiting the unit is equal to 22°C (72°F). For this analysis the chilled water temperature and tower water temperature are held constant at 7°C (45°F) and 20°C (68°F), respectively. The resulting IT equipment power and pPUE are plotted in Figure 3-2. The results show an approximately 50 percent improvement when using tower water compared to chilled water. Therefore, the hypothesis is correct if the IT power is above approximately 35 kW. Below this IT power, tower water alone can meet the load with only a single heat exchanger.

A more interesting result is presented when comparing Case 1 to Case 4. Both of these cases used chilled water, but Case 1 has very good energy efficiency because only a very small amount of chilled water is needed to meet the cooling requirements. This result highlights the key advantage of this unique design (using compressor cooling only when needed by pre-cooling without it, much like the concept of an integrated water-side economizer). Note: while tower water use is more efficient, a single heat exchanger design may not provide the cooling capacity needed; see "Heat Capacity Limit" in Figure 3-2.

Hypothesis 2: Two heat exchangers connected to tower water offer advantages not available with only one heat exchanger connected to tower water.

As shown in Figure 3-1, comparing Case 2 compared to Case 3, the use of two heat exchangers connected to tower water provides a significant increase in cooling capacity. In our study, the hypothesis was found to be incorrect for the configurations below 35 kW of heat load; better efficiency is obtained using tower water with one heat exchanger. At higher heat loads, the use of one heat exchanger using tower water is not an option because the heat load cannot be met.

As shown in Figure 3-3, there is another potentially helpful way to compare using one or two heat exchangers using tower water. In this comparison, the SAIT requirement is met by adjusting the temperature of the tower water. The efficiency for both configurations is very similar if the cooling water can be supplied by using the tower only. If the climate and cooling tower design are such that some chiller cooling is required to meet the cooling requirement, the configuration with two heat exchangers will have an efficiency advantage by reducing the amount of energy needed for compressor-based cooling.

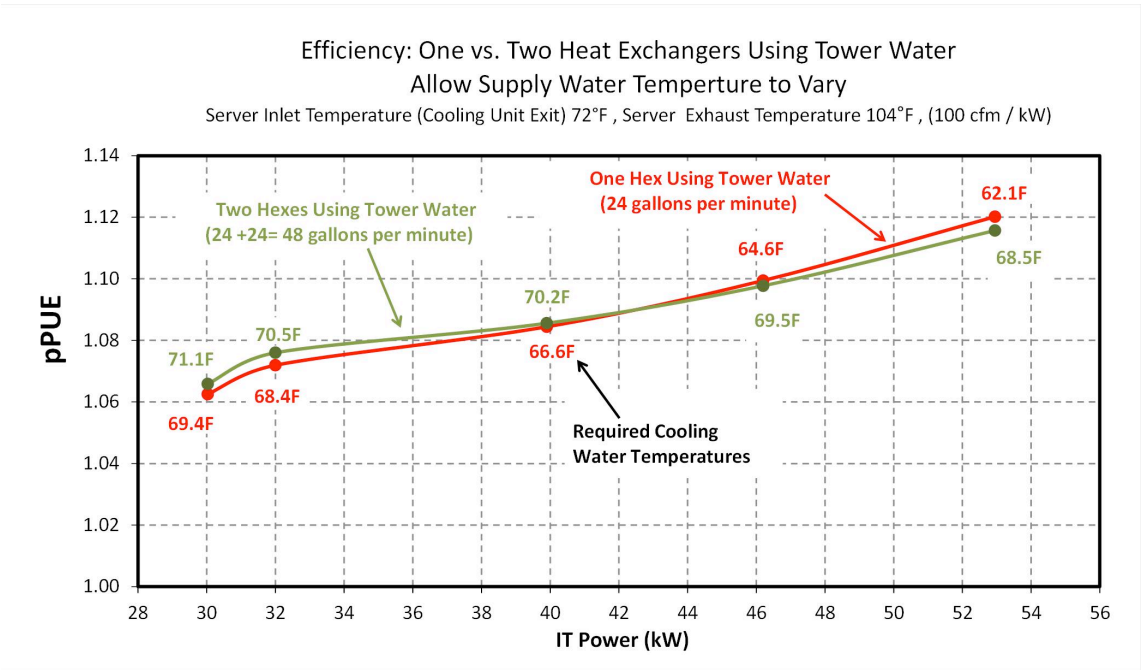

Figure 3-3: A Comparison of Efficiency and Cooling Water Requirements of One vs. Two Heat Exchangers Connected to a Variable Temperature Tower Water Supply

Hypothesis 3: The dual heat exchanger cooling unit tested compares favorably to similar units tested in a previous PIER demonstration.

The performance of the APC device tested was compared to similar water-cooled devices designed for use when placed in a row of computer racks and tested as part of the Chill-Off 2 demonstration. The energy use efficiency metric Chill-Off Energy Efficiency (COEE) COEE used in the Chill-Off 2 study is equivalent to the pPUE metric used in this report. Two comparison points were selected, analyzed using the model developed for this report and plotted on a graph derived from the Chill-Off 2 demonstration: (1) using 45°F (7.2°C) cooling water supply with a server air inlet temperature (SAIT) of 72°F (22.2°C), and (2) using 60°F (15.6°C) cooling water supply with a SAIT of 72°F. In both cases the prototype fan power was reduced by 35 percent, as only one heat exchanger was needed to meet the target set point of 72°F.

The results, shown by two vertical lines in Figure 3-4, indicate that a trend of improved efficiency (lower COEE and lower pPUE) may be provided by this prototype cooling device. The vertical line at each point corresponds to a range of IT equipment power (24 kW to 43 kW). Higher points on each vertical line correspond to higher IT equipment power.

The conclusion that the unit tested for this demonstration appears to be more efficient is not surprising considering that the volume limiting the size of the heat exchanger is larger than

units tested in the Chill-Off 2 demonstration. This provides space for a larger heat exchanger, which should reduce the fan energy needed for a given air flow rate. The larger space taken by this cooling unit may be a factor if data center floor space is critical. There are other significant factors, such as fan efficiency and controls, that are different between the Chill-Off 2 devices and the device tested in this demonstration; therefore, the conclusion may not apply to all large dual heat exchanger units as a class.

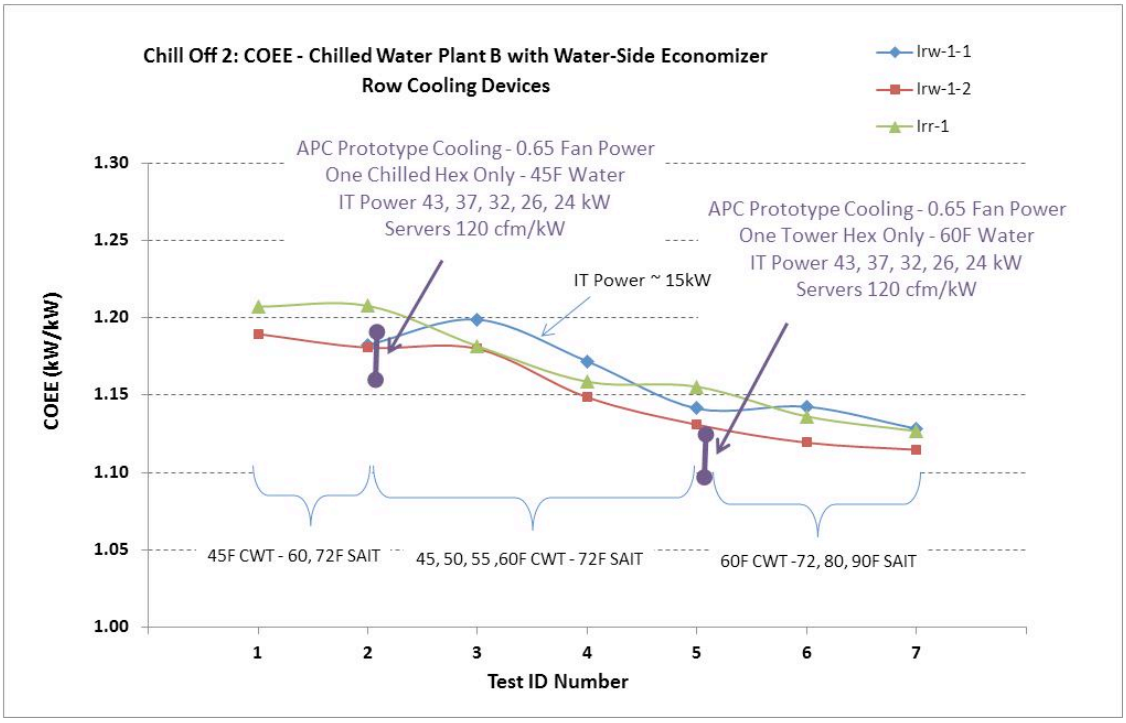

Figure 3-4: Comparison to Chill-Off 2 Results

Hypothesis 4: The power used by the cooling unit, mostly fan power, is significant to energy efficiency.

Looking at Case 1 in Figure 3-1 as an example, the original intended design that is configured with two heat exchangers and chilled water being added as needed, an interesting trend is revealed. Figure 3-5 shows that, at the upper end of the heat removal capacity, the power required for the fans inside the cooling unit is approaching 50 percent of the total cooling infrastructure cooling energy needed. Of course, this result will vary depending on many factors, including the energy required to make both types of cooling water and the fan, fan control, and heat exchanger design.

The split between the power consumed by the electronics and that consumed by the fans was not measured; this may affect the results somewhat, but it is not likely to change the conclusion.

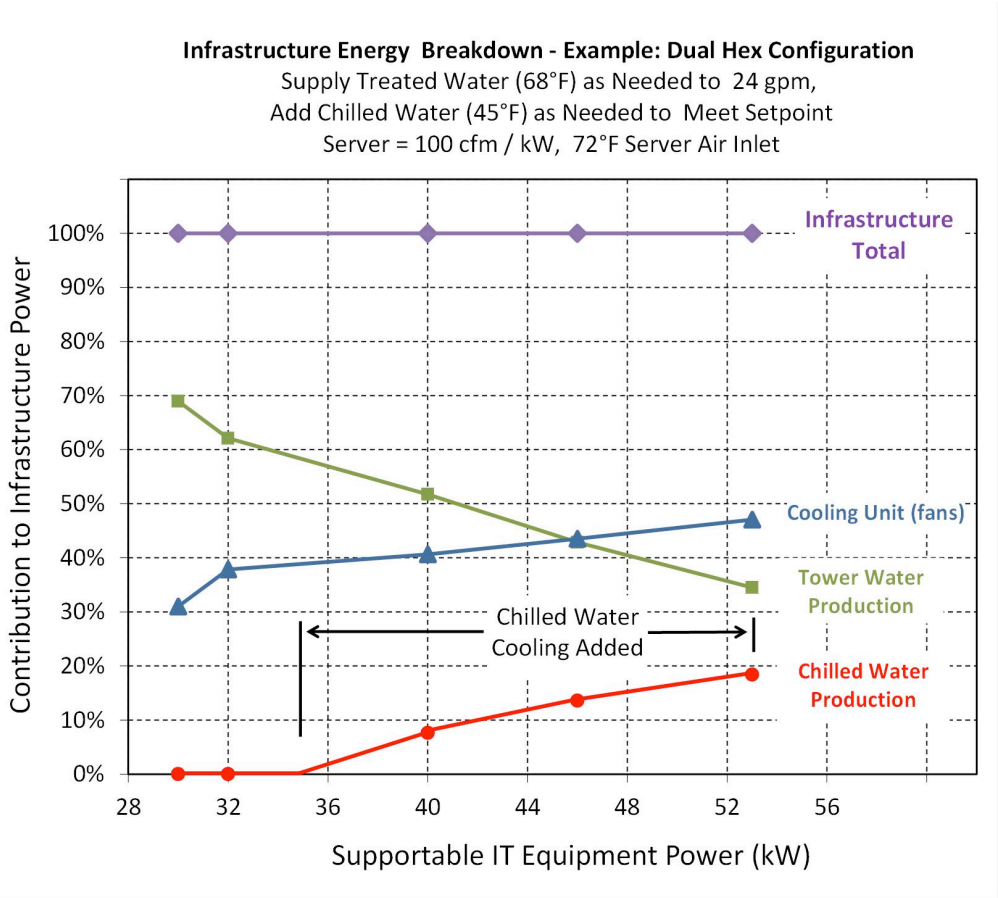

Figure 3-5: Case 1 from Figure 3-1. Infrastructure Energy Consumers: Tower Water Production, Chilled Cooling Water Production, and Cooling Unit.

CHAPTER 4:
Conclusions and Recommendations

A prototype dual heat exchanger, close-coupled IT equipment, InRow™-type cooling device was successfully demonstrated, highlighting its energy efficiency advantages. The results were compared to a previous demonstration of cooling devices designed for the same application.

The evaluation of this unique dual heat exchanger design revealed or supported the following:

- Being able to use cooling tower-produced water separately to meet cooling requirements before adding cooling provided by a chiller can provide specific energy use efficiency improvements on the order of 30 to 50 percent. The ASHRAE TC 9.9 2011 Thermal Guidelines for Data Processing Environments lists expanded allowable environmental conditions for IT equipment. The use of these expanded limits would provide the required cooling using only tower-produced cooling water for most U.S. locations year around. The Green Grid has free cooling maps that can be used as a reference for expected environmental conditions that govern the limits of cooling tower-produced water supply temperatures.

- A simulation developed in our study was based on measured performance. The simulation shows that a configuration using two air-to-water heat exchangers has efficiency similar to that of a single heat exchanger configuration if the tower water can be supplied within a range of temperatures (see Figure 3-3). The study showed two examples where users could select between one or two heat exchangers:

    - If the heat load is above 35 kW and the tower water cannot be supplied below 68°F (20°C) a two heat exchanger configuration is required.

    - If the tower water can be supplied below 68°F, for example down to 62°F (16.7°C), a single heat exchanger and a less capable fan design has a similar efficiency at a lower capital cost while still providing full cooling capacity.

- At high airflow rates, fan efficiency is particularly important. Heat exchanger airflow restriction, fan selection, and controls should be a primary mechanical design consideration as part of improving energy use efficiency.

- The cooling unit prototype compared favorably to tests of similar devices in a past demonstration. The comparison indicated that a 20 to 30 percent improvement in pPUE may be possible for a single heat exchanger configuration. This result is likely because the prototype cooling unit has a larger heat exchanger, which provides greater air flow.

Note:

The cooling unit prototype was capable of a higher cooling rate than what the results show. This difference is due to the test constraint of not allowing the air temperature leaving the cooling unit to go below the server air inlet minimum. Much higher cooling capacities are possible with this cooling unit, but the exiting cold air would be below the target server air inlet temperature. A maximum air flow rate of approximately 5200 cfm was estimated; when combined with an assumed server thermal performance of 100 cfm per kilowatt, this results in a cooling rate of 52 kW. In addition, higher cooling rates are possible if the server thermal performance cfm/kW value is lower (providing higher server exhaust temperatures) and more chilled water flow can be utilized.

The prototype test found energy use efficiency advantages, combined with installation and configuration flexibility. Results suggest that the development of a production version using the design concepts found in this prototype be continued.

References

Coles, H. C. 2014. *Demonstration of Rack-Mounted Computer Equipment Cooling Solutions.* California Public Interest Energy Research (PIER) Project. Lawrence Berkeley National Laboratory, LBNL-6659E

Glossary

Chilled Water	*Chilled Water* refers to cooling water supplied as part of a typical plant design where cold water is supplied at a temperature near 45°F (7.2°C) to all cooling loads at a given site. Chilled Water is more expensive to produce than Tower Water because it requires more electrical energy to produce.
cfm	cubic feet per minute
COP	Coefficient of Performance
CRAH	computer room air handler
IT	information technology
kW	kilowatt
pPUE	partial Power Usage Effectiveness
PUE	Power Usage Effectiveness
SAIT	server air inlet temperature
Tower Water	*Tower Water* is the water supplied on the data center cooling side of a plate frame heat exchanger. The chiller plant model used in this study assumes the plant is equipped with a water-side economizer. Therefore it is assumed that water exiting the cooling tower can be used directly for cooling inside the data center. This water could be supplied directly but since cooling tower exiting water is usually of poor quality, it is assumed the water coming directly from the cooling tower is separated by a large plate frame type heat exchanger. Depending on the plant design, load, and environmental conditions, Tower Water can be produced very efficiently, at a high COP.

APPENDIX A: Air Flow Rate Calculation Method

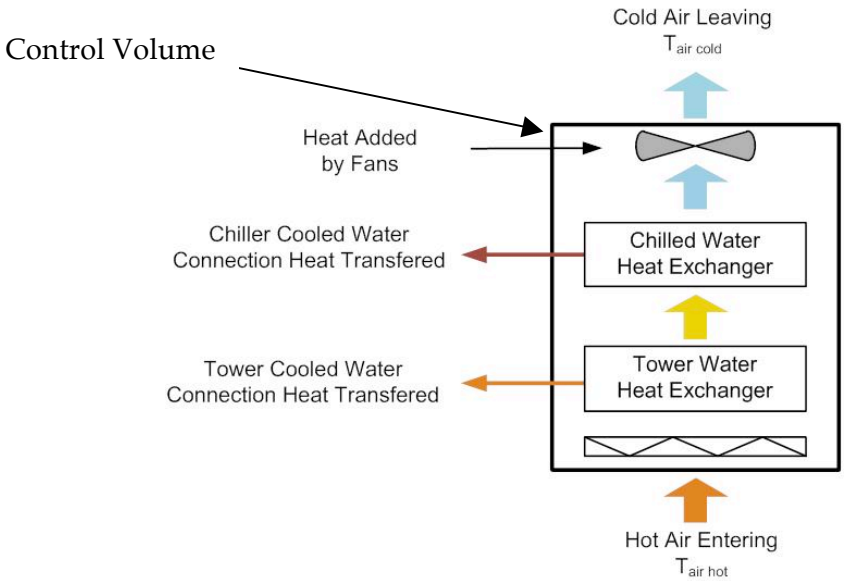

Given: net heat transfer rate across control volume = 0

Abbreviation (Q) = heat transfer rate; units can be kW

$Q_{air} + Q_{all\ other\ (air,\ chiller,\ tower,\ fans)} = 0$
Q_{air} = positive (net heat entering)
$Q_{chiller}$ = negative (net heat leaving) [known from plant simulation]
Q_{tower} = negative (net heat leaving) [known from plant simulation]
Q_{fans} = positive (net heat entering) [know by measurement]

Solve for $Q_{air} = Q_{chiller} + Q_{tower} - Q_{fans}$
Q_{air} = Specific Heat $_{air}$ * Mass Flow Rate $_{air}$ * Delta T_{air}

Solve for Air Mass Flow Rate
Mass Flow Rate $_{air}$ = Q_{air} / (Delta T_{air} * Specific Heat $_{air}$)

Find Air Density (either $T_{air\ hot}$ or $T_{air\ cold}$) then

Solve for Volumetric Flow Rate at Desired Location (hot or cold side of heat exchanger)

APPENDIX B:
Heat Exchanger Model Development

For this study it was necessary to develop a continuous function that would be used to calculate heat transferred and fluid exiting temperatures given fluid flow rates and fluid inlet temperatures for conditions that were not tested. This function needs the required accuracy to provide support for conclusions for this type of study. A more exacting function could be determined using data supplied by the heat exchanger manufacturer or the use of extensive and costly thermal experimentation. Data from the heat exchanger manufacturer was requested, but it was not provided. Laboratory experimentation required for a complete characterization of heat exchanger performance was beyond the scope and funding provided for this project.

The following described method is proposed and used for results calculations requiring heat exchanger performance estimates.

Background (excerpts from *Principles of Heat Transfer*, 3rd Edition, Frank Kreith)

Heat exchangers have been studied extensively, both empirically and theoretically. Equation B-1 shows the general equation for heat transferred in a heat exchanger.

$$q = UA\ \Delta T_{mean} \qquad \text{(Equation B-1)}$$

Equation B-1: Heat Transferred as a Function of Conductance (U), Area, and Mean Temperature Difference.

When all of the entering and exiting fluid temperatures are known, the concept in Equation B-1 can be used to determine the heat transferred, q. This method is used to determine performance; however, it is not convenient when the unit is tested at one set of fluid flow rates and inlet fluid conditions and performance is wanted at different conditions or flow rates. If a value of U can be determined or estimated, a straightforward method for calculating exit temperatures and heat transferred can be used, as proposed by W. Nusselt[1] and Ten Broeck.[2]

This method involves using the concept of heat-exchanger effectiveness (E) and the heat capacity rates for each fluid, along with the fluid temperatures. *Effectiveness* is the ratio of heat actual heat transferred over the theoretical maximum amount of heat transferred. The heat capacity rate C is defined for each fluid as the mass flow rate multiplied by the specific heat capacity for the fluid. For a given set of conditions, there is a C_{min} and a C_{max}, depending on the fluid properties and flow rates. Equation B-2 shows the resulting equation for heat transfer.

$$q = E\ C_{min}\ (T_{hot\ in} - T_{cold\ in}) \qquad \text{(Equation B-2)}$$

An additional relationship, Equation B-3, is required to simplify the final proposed equations relating Effectiveness, Cmin, and Cmax.

$$N_{tu} = AU / C_{min} \qquad \text{(Equation B-3)}$$

[1] W. Husselt. 1930. "A New Heat Transfer Formula for Cross-Flow," *Technische Mechanik and Thermodynamik*, 12.

[2] H. Ten Broeck. 1938. "Multipass Exchanger Calculations." *Ind. Eng. Chem.*, 30: 1041–1042.

N_{tu} is referred to as the number of transfer units. The following equations are then proposed as a model for predicting the heat exchanger performance for the full range of expected conditions given some data on many fewer measured conditions.

There are two cases with a corresponding calculation method:

- Cmax = Cmixed: corresponds to the mixed fluid (air), and
- Cmax = Cunmixed: corresponds to the unmixed fluid (water):[3]

Cmax = Cmixed; the *C* value for the air is higher than the *C* value for the water.

$$E = 1 - \exp(\text{-Tau} * (C_{max} / C_{min})) \qquad \text{(Equation B-4)}$$

$$\text{Tau} = 1 - \exp(\text{-}N_{tu} * (C_{min} / C_{max})) \qquad \text{(Equation B-5)}$$

Cmax = Cunmixed; the *C* value for the water is higher than the *C* value for the air.

$$E = (C_{max} / C_{min}) * (1 - \exp(\text{-Tau}' * (C_{min} / C_{max}))) \qquad \text{(Equation B-6)}$$

$$\text{Tau}' = 1 - \exp(\text{-}N_{tu}) \qquad \text{(Equation B-7)}$$

The value of *AU* changes with the combined effect of both fluid flow rates. The heat exchanger effectiveness can be estimated directly if *AU* can be determined as a function of the fluid flow rates. To determine this relationship the value of *AU* was selected, which results in the estimate matching the measured heat transfer rate for each test. The manually selected *AU* values were used to produce an equation for *AU* as a function of water flow rate. The resulting relationship is Equation B-8.

$$UA = (3.3134 * \ln(\text{gpm})) - 2.976 \qquad \text{Equation B-8}$$

Equations B-2 through B-8 are used for direct calculations of heat transfer and exiting fluid temperatures given fluid flow rates and entering temperatures for the simulations in this study.

[3] Kays, W. M. and A. L. London. 1964. C*ompact Heat Exchangers, 2nd Edition.* Stanford University. Page 19.

APPENDIX C:
Measured vs. Estimated Heat Exchanger Performance

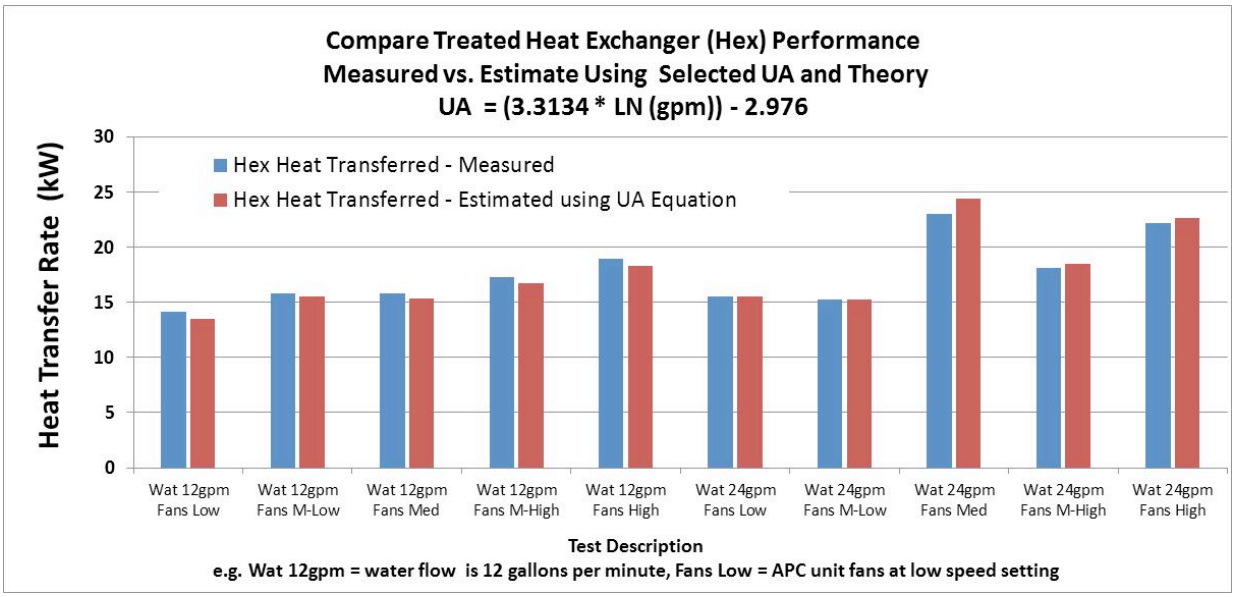

DISCLAIMER

This document was prepared as an account of work sponsored by the United States Government. While this document is believed to contain correct information, neither the United States Government nor any agency thereof, nor the Regents of the University of California, nor any of their employees, makes any warranty, express or implied, or assumes any legal responsibility for the accuracy, completeness, or usefulness of any information, apparatus, product, or process disclosed, or represents that its use would not infringe privately owned rights. Reference herein to any specific commercial product, process, or service by its trade name, trademark, manufacturer, or otherwise, does not necessarily constitute or imply its endorsement, recommendation, or favoring by the United States Government or any agency thereof, or the Regents of the University of California. The views and opinions of authors expressed herein do not necessarily state or reflect those of the United States Government or any agency thereof or the Regents of the University of California.