LBL-36457
UC-414

Lawrence Berkeley Laboratory
UNIVERSITY OF CALIFORNIA

Accelerator & Fusion Research Division

Presented at the Particle Accelerator Conference,
Dallas, TX, May 1–5, 1995, and to be published
in the Proceedings

Design and Testing of the 2 MV Heavy Ion Injector for the Fusion Energy Research Program

W. Abraham, R. Benjegerdes, L. Reginato, J. Stoker, R. Hipple,
C. Peters, J. Pruyn, D. Vanecek, and S. Yu

April 1995

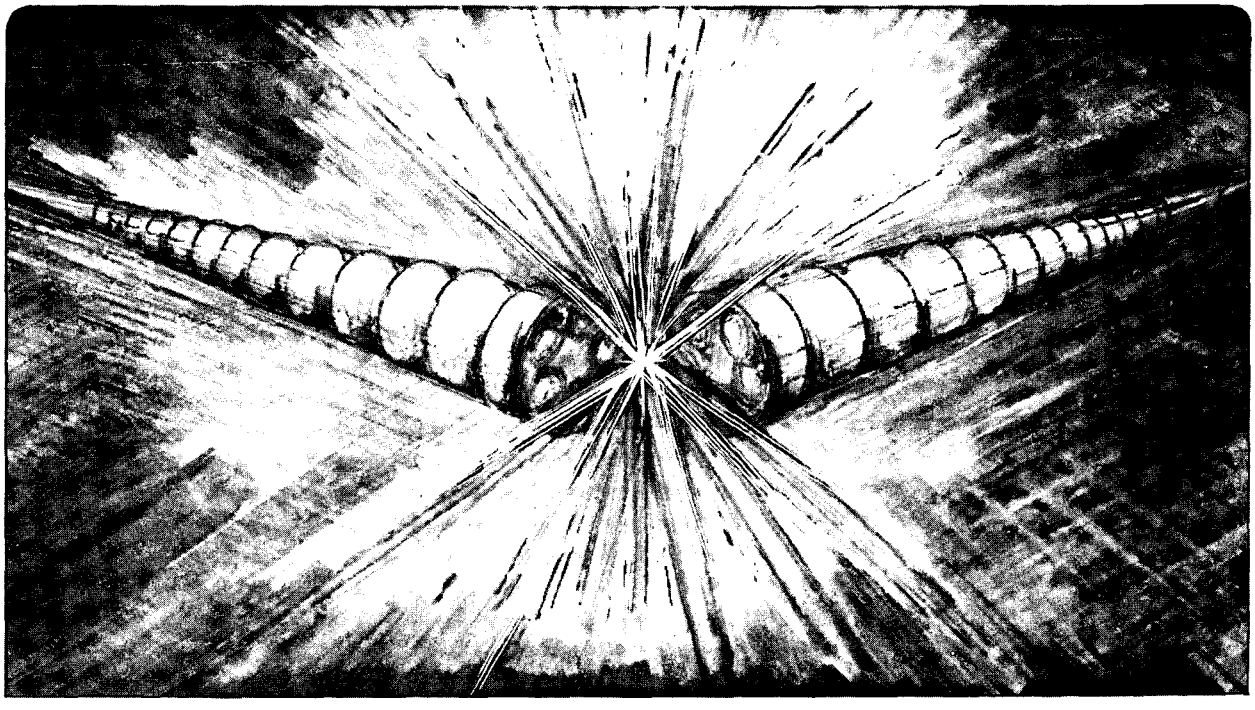

REFERENCE COPY
Does Not
Circulate
Bldg. 50 Library.
LBL-36457
Copy 1

Prepared for the U.S. Department of Energy under Contract Number DE-AC03-76SF00098

DISCLAIMER

This document was prepared as an account of work sponsored by the United States Government. While this document is believed to contain correct information, neither the United States Government nor any agency thereof, nor the Regents of the University of California, nor any of their employees, makes any warranty, express or implied, or assumes any legal responsibility for the accuracy, completeness, or usefulness of any information, apparatus, product, or process disclosed, or represents that its use would not infringe privately owned rights. Reference herein to any specific commercial product, process, or service by its trade name, trademark, manufacturer, or otherwise, does not necessarily constitute or imply its endorsement, recommendation, or favoring by the United States Government or any agency thereof, or the Regents of the University of California. The views and opinions of authors expressed herein do not necessarily state or reflect those of the United States Government or any agency thereof or the Regents of the University of California.

LBL-36457
UC-414

Design and Testing of the 2 MV Heavy Ion Injector for the Fusion Energy Research Program

W. Abraham, R. Benjegerdes, L. Reginato, J. Stoker, R. Hipple,
C. Peters, J. Pruyn, D. Vanecek, and S. Yu

Accelerator and Fusion Research Division
Lawrence Berkeley Laboratory
University of California
Berkeley, California 94720

April 1995

This work was supported by the Director, Office of Energy Research, Office of Fusion Energy, of the U.S. Department of Energy under Contract No. DE-AC03-76SF00098.

DESIGN AND TESTING OF THE 2 MV HEAVY ION INJECTOR FOR THE FUSION ENERGY RESEARCH PROGRAM

W. Abraham, R. Benjegerdes, L. Reginato, J. Stoker, R. Hipple, C. Peters, J. Pruyn, D. Vanecek, S. Yu , Lawrence Berkeley Laboratory, Berkeley, CA 94720

ABSTRACT

The Fusion Energy Research Group at the Lawrence Berkeley Laboratory has constructed and tested a pulsed 2 MV injector that produces a driver size beam of potassium ions. This paper will describe the engineering aspects of this development which were generated in a closely coupled effort with the physics staff. The details of the ion source and beam transport physics are covered in another paper at this conference. This paper will discuss the design details of the pulse generator, the ion source, the extractor, the diode column, and the electrostatic quadrupole column. Included will be the test results and operating experience of the complete injector.

INTRODUCTION

The new 2 MV, 800 mA K^+ injector for heavy ion fusion has been operational since January 1994. The injector utilizes electrostatic quadrupoles (ESQ) to simultaneously focus and accelerate the ion beam. Experiments in ion sources and beam emittance have been carried out during the past year. This paper will describe the engineering design and tests of the 2 MV Marx generator, the beam extraction and the acceleration ESQ column. The overall cross-section of the injector is shown on Fig 2. The pressure vessel is 25' long and has an inside diameter of 64". The left side houses the 38 stage Marx generator and is connected to the diode and ESQ column by the high voltage dome which houses the ion source.

ION SOURCE ELECTRONICS

The high voltage dome houses the hydraulically driven 400 Hz, 10 kVA alternator which powers all the source electronics including the telemetry system. Fig. 1 is a simplified block diagram of the source electronics. The source is an indirectly heated alumino-silicate coated on porous tungsten requiring 2500 watts. The source is biased at -80 kV and the extractor electrode is at dome potential inhibiting ion emission from the hot surface. Ion extraction is obtained by pulsing the source from a -80 kV to +80 kV with the step-up transformer driven by a tunable pulse forming network (PFN). The extractor waveform can be adjusted temporally in amplitude by ± 5% simply by changing the coupled inductance of the PFN. The source filament transformer not only supplies the heater power, but is also a high voltage isolation transformer allowing the source to be biased at -80 kV.

Trigger, timing, and diagnostics information is transmitted to and from the high voltage dome by fiber optics links.

* This work was supported by the Director, Office of Energy Research, Office of Fusion Energy, U.S. Dept. of Energy, under Contract No. DE-AC03-76SF00098.

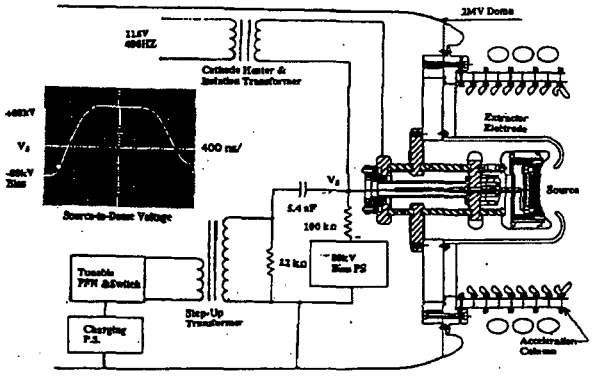

Fig. 1

THE MARX GENERATOR

In order to maintain a low spread in particle energy, an acceleration voltage variation or flat-top of less than 1% is required. The ion transit time through the length of the acceleration column is about 2 μs, hence the flat-top in voltage requirement for 4 μs was chosen to insure good overlap. Many of the standard pulse forming networks were considered to produce a 4 μs pulse with less than 1% variation in amplitude. They were modeled on the computer and all contained a large number of elements (L's and C's). Since this injector was an upgrade of an existing one, space for the Marx Stages was limited by the old geometry. The networks which synthesized the desired pulse were difficult to fit on the existing space. In the circuit simplification process it was discovered that a simple two-harmonics network could produce a flat-top of better than 0.5% when properly matched into the stray capacitance of the dome and the resistive column voltage divider. A multistage low level Marx generator was constructed using this network and it was found to agree closely with the computer modeling efforts. This network was very simple and fit very nicely in the existing space. Fig. 3(a) shows the schematic of the network, Fig. 3(b) is the actual physical layout of one stage, Fig. 3(c) is the 2.2 MV output pulse. The output pulse is generated by 38 identical stages; the first four stages from ground are triggered and the remainder are self-triggered by the previous overvoltage. The 10-90% risetime is less than 1 μs and the flat-top is 4 μs. The output voltage can actually be made to have a slight increasing ramp by underloading or a decreasing ramp by overloading with the liquid resistor which is externally adjustable.

MECHANICAL SYSTEMS

The 2 MV Injector column is 2.4 meters long and contains a diode section and four ESQ sections. The overall arrangement is shown in figure 4. Each of these

sections consist of a series of ceramic rings, 71 cm. outside diameter, brazed together with thin niobium

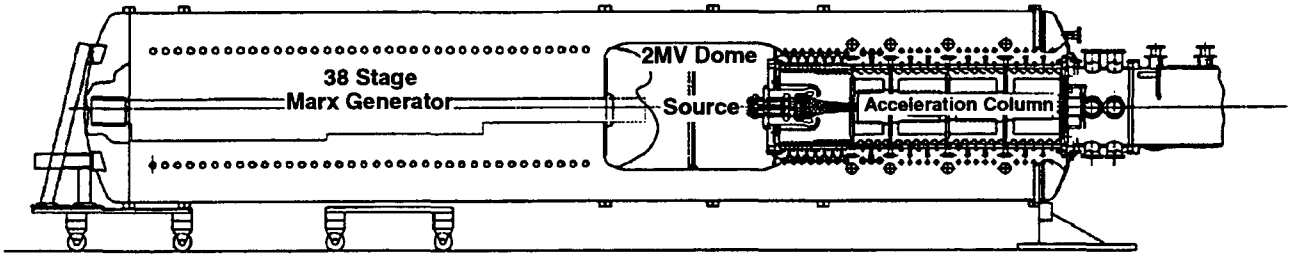

Fig. 2 Overall cross-section of the 2 MV Injector

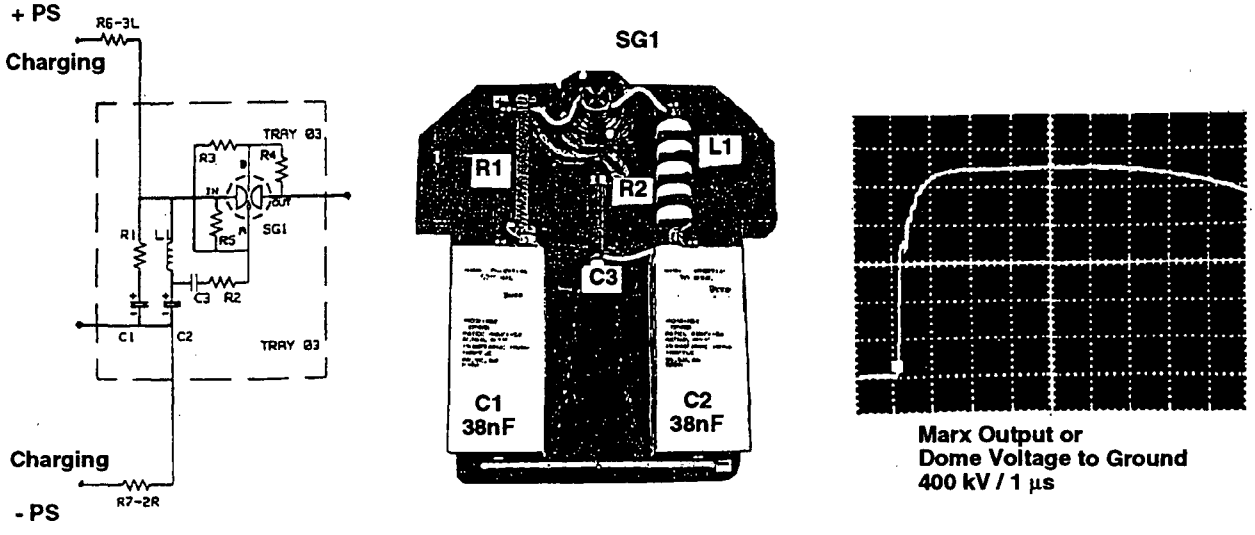

(a) (b) (c)

Fig. 3 (a) Schematic of charging tray (one of 38). (b) Layout of charging tray (c) Output waveform of Marx generator

flanges between each ring. The ESQ electrodes are mounted on plates captured between the ends of the brazed ceramic sections. Stainless steel x-ray shields are attached to the inside edge of each niobium ring. These also hide the triple points formed at the niobium to ceramic joints. A water resistor is electrically attached to the outside edge of each niobium ring. Semi-rigid polyethylene tubing is used in a helical configuration.

Each surface of the ceramic rings was ground very flat and lapped to remove microcracks. The brazing process required heating slowly to 843° C, soaking, and then cooling at a precise rate. Carbon fixtures were used to hold and align each stack during the braze cycle. Each braze cycle took about 24 hours. After brazing each stack was cleaned and excess braze material was removed by etching and grinding.

Larger diameter niobium flanges were used at the ends of each brazed section to provide a means of bolting the sections together. This detail is shown in figure 5. The strength of these joints was a major concern. After careful analysis, consultation with the ceramic manufacturer, and review of available test data, 17,000 cm-Kg was selected as a design limit for the bending moment at the joints between sections. As a result, careful procedures had to be developed in order not to exceed this limit during any phase of assembly and installation.

The installed column weights 2800 Kg. and is supported by 2 fiberglass tension struts on each side attached to a heavy collar between the diode and the first ESQ. This arrangement is shown in figure 4. This arrangement provides the required vertical support force of 2300 Kg. necessary at the 1.8 meter point on the column. Also, the rods load the column in 9200 Kg. compression since they are oriented primarily horizontally. This load turns out to be very useful as it keeps the tensile stress at the end flanges of the brazed sections below the level equivalent to the 17,000 cm-Kg. design limit. In other words, if the column was simply supported by a vertical support at the 1.8 meter point, without the compressive force created by the struts, the brazed joints would crack and come apart.

It was necessary to split the collar vertically in order to enable assembly. Collar geometry was designed in such a way that under load, the collar deforms into the

flat condition. This keeps the deformation of the first ESQ plate axisymmetric which keeps electrode

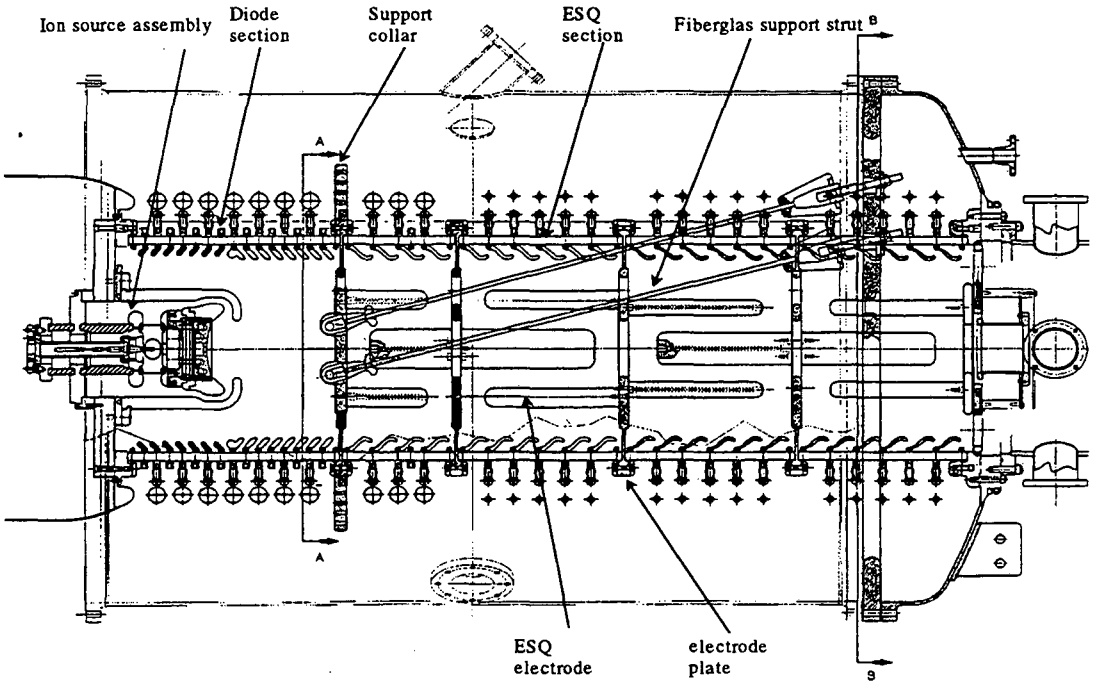

Figure 4. 2 MV Injector column showing fiberglas support struts. Column length is 2.4 meters, and insulator diameter is 71 cm.

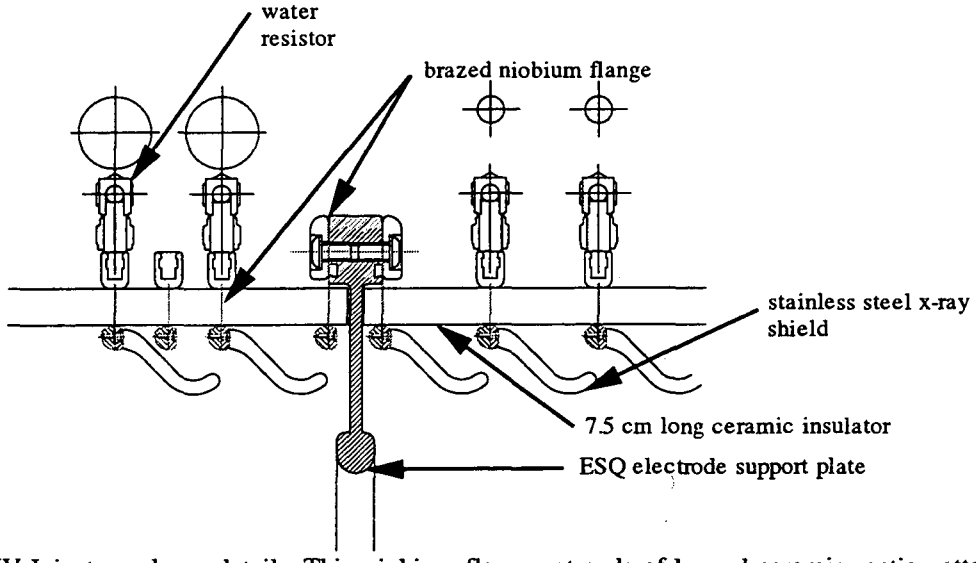

Fig. 5 2 MV Injector column detail. Thin niobium flanges at ends of brazed ceramic section attach to ESQ plate.

misalignment minimal and prevents damage to the ceramic end surfaces.

The ESQ electrodes are mounted on plates captured between the ends of the brazed ceramic sections. The outside diameter of these plates were supported by precise fixtures on a granite table to align all the electrodes in the column during assembly. Measurement of the electrode positions after assembly showed the RMS position error for the electrodes to be 0.3 mm.

CONCLUSION

The 2 MV injector has been operational for over one year. Initial operation was limited to below 1.5 MV due to capacitors which did not meet full specifications. Those capacitors were all replaced with new ones which meet specifications at no cost to LBL. The diode and the electric quadrupole column have operated very reliably with little conditioning required for operation at 2 MV.

Experiments in ion sources, beam transport, beam matching and emittance will continue over the next year.

LAWRENCE BERKELEY LABORATORY
UNIVERSITY OF CALIFORNIA
TECHNICAL AND ELECTRONIC
INFORMATION DEPARTMENT
BERKELEY, CALIFORNIA 94720