LBL-36459
UC-414

Lawrence Berkeley Laboratory

UNIVERSITY OF CALIFORNIA

Accelerator & Fusion Research Division

Presented at the Particle Accelerator Conference, Dallas, TX, May 1–5, 1995, and to be published in the Proceedings

Engineering Conceptual Design of the Relativistic Klystron Two-Beam Accelerator Based Power Source for 1-TeV Next Linear Collider

L. Reginato, F. Deadrick, C. Peters, D. Vanecek, and S. Yu

April 1995

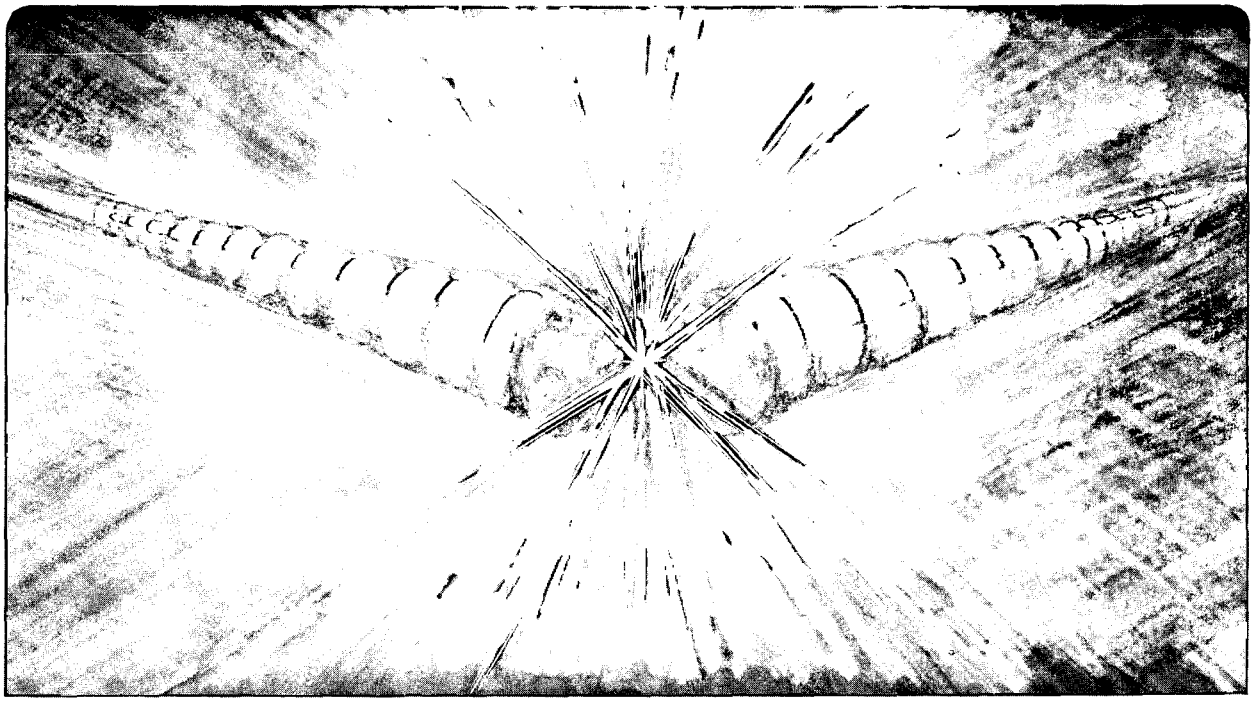

REFERENCE COPY
Does Not
Circulate
Bldg. 50 Library.
LBL-36459
Copy 1

Prepared for the U.S. Department of Energy under Contract Number DE-AC03-76SF00098

DISCLAIMER

This document was prepared as an account of work sponsored by the United States Government. While this document is believed to contain correct information, neither the United States Government nor any agency thereof, nor the Regents of the University of California, nor any of their employees, makes any warranty, express or implied, or assumes any legal responsibility for the accuracy, completeness, or usefulness of any information, apparatus, product, or process disclosed, or represents that its use would not infringe privately owned rights. Reference herein to any specific commercial product, process, or service by its trade name, trademark, manufacturer, or otherwise, does not necessarily constitute or imply its endorsement, recommendation, or favoring by the United States Government or any agency thereof, or the Regents of the University of California. The views and opinions of authors expressed herein do not necessarily state or reflect those of the United States Government or any agency thereof or the Regents of the University of California.

LBL-36459
UC-414

Engineering Conceptual Design of the Relativistic Klystron Two-Beam Accelerator Based Power Source for 1-TeV Next Linear Collider

L. Reginato, F. Deadrick, C. Peters, D. Vanecek, and S. Yu

Accelerator and Fusion Research Division
Lawrence Berkeley Laboratory
University of California
Berkeley, California 94720

April 1995

This work was supported by the Director, Office of Energy Research, Office of High Energy Physics, of the U.S. Department of Energy under Contract No. DE-AC03-76SF00098.

ENGINEERING CONCEPTUAL DESIGN OF THE RELATIVISTIC KLYSTRON TWO-BEAM ACCELERATOR BASED POWER SOURCE FOR 1-TEV NEXT LINEAR COLLIDER

L. Reginato, F. Deadrick, C. Peters, D. Vanecek, S. Yu, Lawrence Berkeley Laboratory, Berkeley, CA 94720

ABSTRACT

Ultra-high gradient radio frequency linacs require efficient and reliable power sources. The induction linac has proven to be a reliable source of low energy, high current and high brightness electron beams. The low energy beam is bunched, transported through resonant transfer cavities in which it radiates microwave energy that is coupled to an adjacent high energy accelerator. The low energy beam is maintained at a constant energy by periodic induction accelerator cells. This paper describes the engineering aspects of the induction accelerator based relativistic klystron. The physics issues are covered in another paper at this conference.

INTRODUCTION

During the past decade, several rf power sources using relativistic Klystrons have been tested for driving high gradient accelerators. In order for these power sources to be competitive with the conventional Klystrons, they must be capable of producing equivalent peak power levels, reliably, economically and efficiently. At first glance, it would seem that building low gradient, high current accelerator in order to drive another would be a more complex and costly proposition. Experiments in generating a relativistic electron beams and extracting the energy by passing it through cavities have shown that very high peak RF levels can be efficiently generated. The practicality of such a method is determined in part by the system which generates and drives the relativistic electron beam. The paper addresses the engineering issues associated with building an efficient and reliable electron accelerator where the energy is extracted periodically after re-acceleration. The physics design and the beam dynamics are covered elsewhere at this conference.

INDUCTION ACCELERATOR

The induction accelerator has provided a reliable and efficient way to accelerate high current beams. Currents from hundreds of amperes to many kiloamperes have been accelerated to many tens of MeV's. They are capable of producing beam pulses from tens of nanoseconds to microseconds in duration at kilohertz repetition rates. Fig. 1 shows the equivalent circuit of an induction accelerator cell. I_C is the magnetizing current required to drive the core, I_B is the beam current, and I_N is any compensating network current.

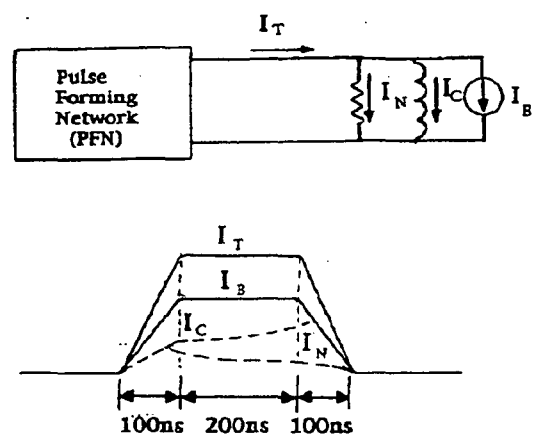

Fig. 1

The efficiency of an induction accelerator can approach 100% if the beam current is much greater than the current required to magnetize the transmission line transformer (or autotransformer) which forms the induction cell. For example, the advanced test accelerator (ATA) induction cell required less than 1 kA of magnetizing current while it accelerated a 10 kA beam for 70 ns.

The efficiency of the TBA accelerator will depend on a number of factors. Beam transport dynamics will determine the size of the beam pipe and the accelerating gradient. The output power requirement will determine the pulse duration, beam current and repetition rate. Once these factors are established, then the induction cell outer diameter and drive will be determined once the optimum magnetic material has been selected. For accelerators with pulse duration less than 100 ns, Ni-Zn ferrites have been used as the magnetic material for the induction cell. For pulse duration in the several hundred nanoseconds to several microseconds, magnetic materials such as Ni-Fe and Metglas[1] have been used. The optimum choice of material for the TBA, which requires a pulse of 300 ns duration, is established by the material's losses and the economics for achieving the desired pulse. From Fig. 2, one can see that the saturation losses for the ferrites are about one fifth the losses of nickel-iron or Metglas. However, the ferrites have a flux swing which is about one fifth that of the Metglas. This, of

* This work was supported by the Director, Office of Energy Research, Office of Fusion Energy, U.S. Dept. of Energy, under Contract No. DE-AC03-76SF00098.

[1]Metglas is a trade name of Allied-Signal

course, requires a cross-sectional area of material which is five times larger. As previously discussed, the inner radius and the length of cells (gradient) is fixed by the physics requirements, hence, the only way to increase the area of the core is to increase the outer radius. Since the volume of material increases nearly as the radius squared, smaller, more efficient and lower cost induction cells are obtained

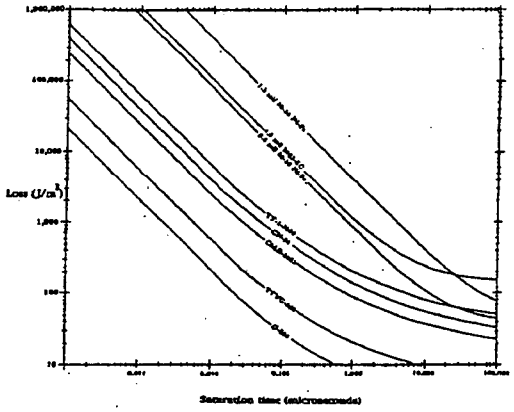

Fig. 2 Losses of ferri and ferro-magnetic materials at different saturation times

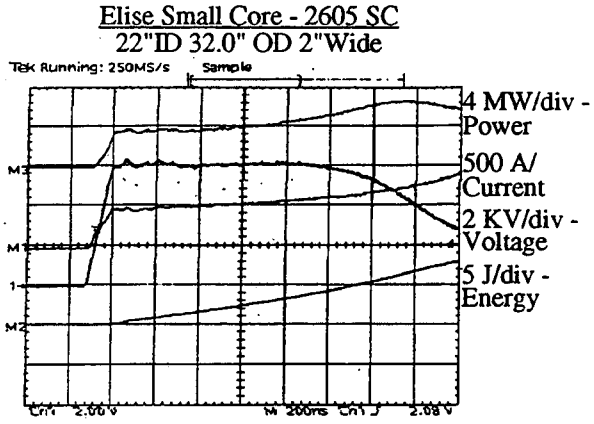

Fig. 3 Voltage, Current, Power and Energy Loss for Metglas 2605SC unannealed

by using the higher delta B materials. Presently, the most cost-effective material for the TBA is the Metglas alloy 2605SC. This ferromagnetic material comes in ribbon form 20 μm thick and is wound into cores with an insulating layer of mylar 2.5 μm thick. Fig. 3 shows the voltage, current, peak power, and joules required to drive a large (1 m OD) core for heavy ion fusion. Fig. 4, shows the B-H characteristics for that core which is unannealed or as cast. Since the rates of magnetization (dB/dt) are higher for the TBA application, the losses will be about 900 J/m^3. Fig. 5 shows a complete block diagram of the drive system and the cross-section of six induction modules consisting of five cells each generating 20 kV or a total of 100 kV for the high current low energy beam. Three of these modules will generate the required 300 kV/m acceleration gradient. At a repetition rate of 120 Hz, about 3.24 kW will be dissipated in each 100 kV module. This will require active cooling to the five cells to maintain an acceptable temperature rise.

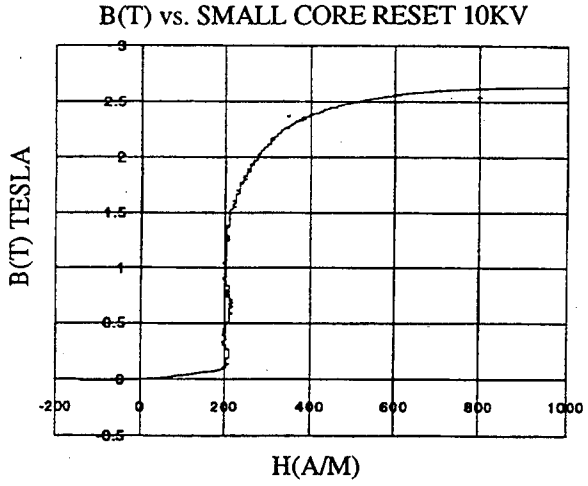

Fig. 4 B-H loop for 2605 SC as cast

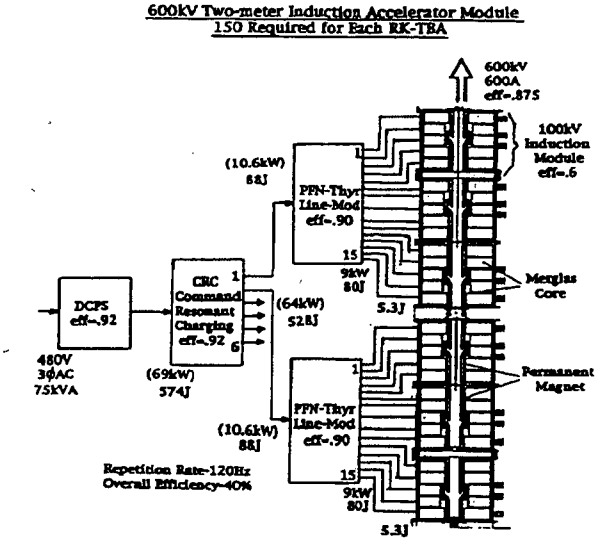

Fig. 5 Two meter section of the low energy induction accelerator with all power conditioning system

POWER CONDITIONING

The most reliable power conditioning system at high repetition rates (kHz) and short pulses is the nonlinear magnetic pulse compression modulator. This system has been used in a number of laser and induction accelerator drivers. Solid state devices are typically used to initiate the pulse compression cycle and a combination of step-up and pulse compression stages can generate practically any voltage and pulse duration with unlimited life.

For application where the repetition rate is not high (120 Hz) and the rate of rise in current is not too demanding, a simple thyratron driven modulator offers acceptable reliability with simpler design and at a lower cost. The modularity of the induction cell offers several options in the voltage and current drive to achieve 100 kV.

In this case, we have chosen to drive each of the five cores with 20 kV inducing a total voltage across the cell of 100 kV. Driving at this voltage level avoids any step-up

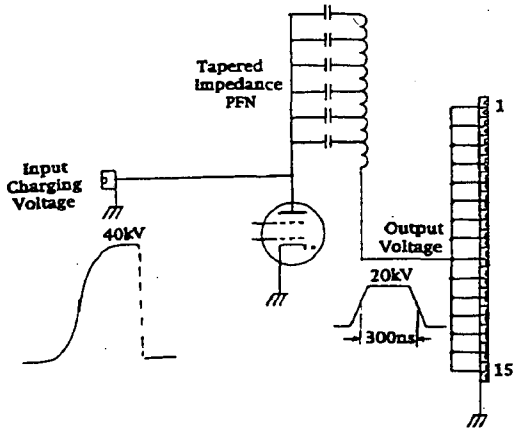

Fig. 6 Simplified schematic of line modulator. The tapered impedance PFN will have the same temporal impedance as the nonlinear magnetic core of the induction cells.

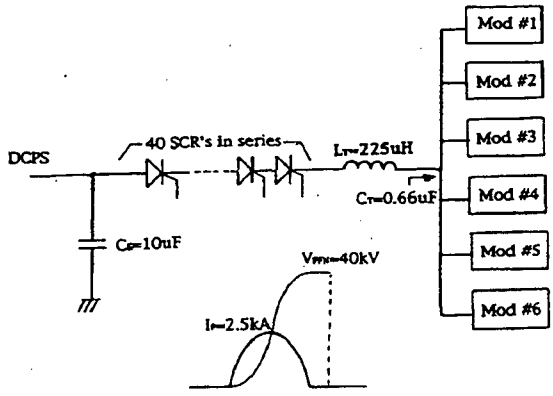

Fig. 7 The command resonant charging (CRC) system charges six modulators and also resets the induction accelerator cores.

transformers and can be generated directly by a thyratron with 40 kV charging voltage on the pulse forming network (PFN). As shown in Fig. 3, the current drive to the cores is somewhat nonlinear, but a constant amplitude pulse can be generated, within bounds, simply by tapering the impedance of the PFN stages. The PFN will consist of many coupled L-C stages each with impedance which temporally matches the impedance of the induction core. This tapered impedance PFN is resonantly charged to twice the output voltage required. From Fig. 7, one can see that the PFN charging current flows through the induction core, thus resetting the core to $-B_r$ ready for the next acceleration cycle.

COOLING OF INDUCTION CORES

Each 100 kV induction module will dissipate about 1500 watts at 120 Hertz. Each magnetic core will be supported by a mandrel with voltage feeds on each side of the core which allow for cooling channels. Each core dissipates 300 watts and this heat is removed by circulating oil which also acts as a high voltage insulator at the acceleration gap. Further studies are required, but it

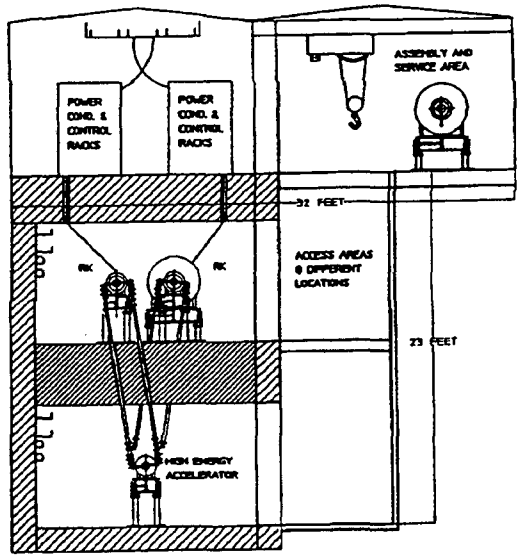

Fig. 8 Elevation view of the RK-TBA accelerator.

may be feasible to use sulfur hexafluoride under pressure to insulate and remove the 1500 watts dissipated in the cores.

CONCLUSION

A simple power conditioning system has been conceptualized for driving induction cells at a relatively high efficiency. The power conditioning system is based on previous experience which incorporates conservative thyratron line modulators without nonlinear magnetic pulse compression or step-up transformers. It is expected that at 120 Hz, the thyratron will offer acceptable reliability which is comparable to the life of a Klystron driven system. This conceptual design will be prototyped over the next several months to confirm our studies.

REFERENCES

[1] Westenskow, G.A., and Houck, T.L., "Results of the Reacceleration Experiment: Experimental Study of the Relativistic Klystron Two-Beam Accelerator Concept," presented at the 10th International Conference on High Power Particles Beams, San Diego, CA, June 20-24, 1994, to be published in the Proceedings.

[2] Yu, S., Deadrick, F., Goffeney, N., Henestroza, E., Houck, T., Li, H., Peters, C., Reginato, L. Sessler, A., Vanecek, D., and Westenskow, G., "Relativistic Klystron Two-Beam Accelerator As A Power Source For A 1 TeV Next Linear Collider - Design Report," preliminary draft, LBL, Berkeley, CA, September, 1994.

LAWRENCE BERKELEY LABORATORY
UNIVERSITY OF CALIFORNIA
TECHNICAL AND ELECTRONIC
INFORMATION DEPARTMENT
BERKELEY, CALIFORNIA 94720