0 0 0 4 3 0 1 4 3 5

RECEIVED
LAWRENCE
RADIATION LABORATORY

MAY 1 1975

LIBRARY AND
DOCUMENTS SECTION

LBL-3668
c.1

RECENT RESULTS FOR e^+e^- ANNIHILATION AT SPEAR

Presented by H.L. Lynch

Stanford Linear Accelerator Center
Stanford University, Stanford, Calif. 94305

For Reference

Not to be taken from this room

LBL-3668
c.1

DISCLAIMER

This document was prepared as an account of work sponsored by the United States Government. While this document is believed to contain correct information, neither the United States Government nor any agency thereof, nor the Regents of the University of California, nor any of their employees, makes any warranty, express or implied, or assumes any legal responsibility for the accuracy, completeness, or usefulness of any information, apparatus, product, or process disclosed, or represents that its use would not infringe privately owned rights. Reference herein to any specific commercial product, process, or service by its trade name, trademark, manufacturer, or otherwise, does not necessarily constitute or imply its endorsement, recommendation, or favoring by the United States Government or any agency thereof, or the Regents of the University of California. The views and opinions of authors expressed herein do not necessarily state or reflect those of the United States Government or any agency thereof or the Regents of the University of California.

SLAC-PUB-1536
LBL-3668
February 1975
(E)

RECENT RESULTS FOR e^+e^- ANNIHILATION AT SPEAR*

Presented by H. L. Lynch
Stanford Linear Accelerator Center
Stanford University, Stanford, California 94305

J. E. Augustin, A. M. Boyarski, M. Breidenbach, F. Bulos,
J. T. Dakin, G. J. Feldman, G. E. Fischer, D. Fryberger,
G. Hanson, B. Jean-Marie, R. R. Larsen, V. Lüth,
D. Lyon, C. C. Morehouse, J. M. Paterson, M. L. Perl,
B. Richter, P. Rapidis, R. F. Schwitters, W. Tanenbaum, F. Vannucci

Stanford Linear Accelerator Center
Stanford University, Stanford, California 94305

and

G. S. Abrams, D. Briggs, W. Chinowsky, C. E. Friedberg, G. Goldhaber,
R. J. Hollebeek, J. A. Kadyk, A. Litke, B. Lulu, F. Pierre,
B. Sadoulet, G. H. Trilling, J. S. Whitaker, J. Wiss, J. E. Zipse

Lawrence Berkeley Laboratory
University of California, Berkeley, California 94720

Invited talk at the 2nd Orbis Scientiae, Coral Gables, Florida,
22 January 1975

*Work supported by Energy Research and Development Administration.

I. INTRODUCTION

In this presentation I shall assume that everyone is familiar with the existence of two narrow resonances coupling to electrons[1,2,3] at masses of 3.1 and 3.7 GeV. Properties of these resonances will be described at length. I shall also discuss upper limits which we can place for the production of other such resonances in the range 3.2 to 5.9 GeV.[4] Lastly, I shall discuss some tantalizing structure at 4.1 GeV.[5] This talk will concentrate upon the experimental facts; various speculations will be left for other speakers. It should be emphasized that most results described are preliminary and are subject to refinement.

II. APPARATUS

In order to save time I shall give only a very short description of the experimental apparatus[6]: The storage ring itself circulates one beam each of positrons and electrons which collide at 0°, and the energy resolution (standard deviation) is of the order of 1 MeV for a center-of-mass energy of 3 GeV. This high resolution is dominated by quantum fluctuations in the synchrotron radiation. The absolute energy of the machine is known only to about 0.1%. The interaction region is of order of a millimeter transverse to the beam and a few centimeters along the beam.

The magnetic detector is schematized in Fig. 1, and consists of a counter around the interaction region, some spark chambers, some more counters for measuring time-of-flight, and some more for electron identification. The solenoidal magnet produces a nearly uniform field of about 4 kG along the beam. The time-of-flight system allows π/K separation up to about 600 MeV/c. The trigger requires two or more charged particles; this means, for example, that no totally neutral final states can be studied.

Backgrounds for the data on the resonances are extremely small and have no effect on results, being of the order of 0.01% to 0.1%.

III. PROPERTIES OF $\psi(3.1)$

There are several properties of the $\psi(3.1)$ which can be easily extracted from the data. Figure 2 shows the total hadron cross section as a function of center-of-mass energy. The two most striking features of the figure are the magnitude of the peak cross section, ~2500 nb, and the very narrow width, ~2.5 MeV FWHM, a width which is fully compatible with the expected resolution of the storage ring. This means that what is plotted is not really the cross section but rather a convolution of the cross section with the machine resolution. To a very good approximation the shape of the curve depends only upon the area of the cross section vs. w. On very general grounds the cross section for resonance production can be related to partial widths

$$\sigma_c(w) = \frac{\pi(2J+1)}{w^2} \frac{\Gamma_e \Gamma_c}{(m-w)^2 + \Gamma^2/4} , \qquad (1)$$

where J is the spin of the resonance, Γ_e is the partial width for decay into e^+e^-, Γ_c is the partial width to any channel c, w is the center-of-mass energy, m is the mass, and Γ is the total width of the resonance. Thus, the data for $e^+e^- \to \psi \to$ hadrons are described by

$$\int \sigma_H \, dw = \frac{2\pi^2 (2J+1)}{m^2} \Gamma_e B_H , \qquad (2)$$

where B_H is the branching fraction into hadrons. Using the data of Fig. 2 and making appropriate radiative corrections[7] the integral cross section may be obtained, $\int \sigma_H \, dw = 10.8 \pm 2.7$ nb GeV. Assuming a spin J=1, on the prejudice that $\psi(3.1)$ is produced by single photon annihilation of the original e^+ and e^-, the product $\Gamma_e B_H$ can be determined. The branching fractions to leptons may

be determined using the data of Fig. 3 (which, by the way, manifests gross violations of QED); assuming that there are no totally unobserved decay modes, Γ_e and Γ may be determined, $\Gamma_e = 5.2 \pm 1.3$ keV; $\Gamma = 77 \pm 19$ keV. The errors stated are strongly correlated and are entirely dominated by systematic errors, which are due, for example, to setting errors in energy and variations of machine resolution with experimental conditions. The demands made upon the machine for energy setting are extremely severe, and much effort was needed to maintain relative setting errors to less than 0.1 MeV center-of-mass energy.[8]

The assumption of J=1 can be tested experimentally by looking at the decay $\psi \to \mu^+\mu^-$. If the state $\psi(3.1)$ has the same quantum numbers as a photon, then, and only then, there can be interference of this channel with normal μ-pair production by QED. Figure 4 shows the prediction for the ratio of yields for $\psi \to \mu^+\mu^-$ to $\psi \to e^+e^-$ using the parameters already obtained. The choice of the ratio is convenient because systematic errors are minimized. Two cases are shown, with and without interference, corresponding respectively to pure axial vector and pure vector interaction. Figure 5 shows our data, which have been more coarsely binned to improve the statistical accuracy of each point. The amount of data in the interference region is limited so that a fit is not very fruitful; however, the hypothesis that there is no interference may be unambiguously tested: For this case the expected μ rate should rise rapidly for $w \geq 3.093$ GeV, but be quite flat below 3.093 GeV. There is a total of 89 μ-pair events and 1532 e-pair events below 3.093 GeV. Given those e-pair events, one expects 122 μ pairs; thus, the observed yield of μ pairs is ~3 standard deviations below that expected for no interference. Furthermore, the above observed yield is compatible with the interference hypothesis. We

conclude that $\psi(3.1)$ must have the same quantum numbers as the photon, having rejected the hypothesis of no interference. The observation of this interference is the most convincing and direct evidence of the vector nature of the $\psi(3.1)$.

The observation of interference does not rule out the possibility that $\psi(3.1)$ is a mixture of vector and axial vector properties. The angular distribution of the μ pairs is sensitive to such a mixture. In particular, if $\psi(3.1)$ has both vector and axial vector properties (i.e., a parity violation) there will be an asymmetry in the μ-pair angular distribution at the resonance energy. The observed asymmetry is less than .04 in absolute value at the resonance energy, and is compatible with 0 in the region 5 MeV above and below the resonance. This implies a V-A mixing angle of less than 8°.

IV. PROPERTIES OF $\psi(3.7)$

We can carry through some of the same kinds of analysis on the $\psi(3.7)$ as on the $\psi(3.1)$. Figure 6 shows the hadronic cross section. The integrated cross section is $\int \sigma_H dw = 3.7 \pm 0.9$ nb GeV, and $\Gamma_e = 2.2 \pm 0.6$ keV. Again the errors are strongly correlated and dominated by systematics. In contrast to the $\psi(3.1)$, however, the $\psi(3.7)$ has a very small branching ratio to leptons, so that the determination of Γ from Γ_e is difficult. An upper limit on Γ may be obtained from the width of the hadronic yield vs. w. A total width $\Gamma > 1$ MeV is incompatible with the expected resolution of the machine, while a lower limit of $\Gamma = 0.2$ MeV is obtained by attributing all μ-pair events reconstructing near 3.684 GeV to $\psi \rightarrow \mu^+\mu^-$ (i.e., including QED events). This number will eventually be determined when our constrained fitting programs have been thoroughly tested and loss or contamination mechanisms well studied. Because of the small branching fraction we cannot yet make the definitive test for

interference, and we can only assume, not prove, that $\psi(3.7)$ has spin 1. Much more data will be required to perform this test.

V. DECAY MODES OF $\psi(3.1)$ AND $\psi(3.7)$

The leptonic decays of the $\psi(3.1)$ have already been discussed. If this conference were a few weeks later it would be possible to be much more quantitative in the discussion of the hadronic decay modes which have been seen. At this time constrained event fitting programs are being developed, and the reported branching modes can only be discussed qualitatively. These results promise to be quite exciting, but for now I can only tease your appetite.

One clear result is that the cross section for 1C (one constraint) events involving an odd number of pions, e.g., $2\pi^+ 2\pi^- \pi^o$, is substantially greater than that for 4C (four constraint) events, e.g., $2\pi^+ 2\pi^-$. We have clean signals for the modes $\pi^+\pi^-\pi^o$, $2\pi^+ 2\pi^- \pi^o$, and $3\pi^+ 3\pi^- \pi^o$. The 5- and 7-pion modes have cross sections of the order of 50 nb (compared to the total hadronic cross section of 2500 nb), while the 3-pion mode is a little smaller. Clear ρ^o and $\rho^\pm$ signals are seen in the 3-pion state; clear signals for $\rho^\pm$ and ω are seen in the 5-pion state.

The 4C events have a significantly smaller cross section than the 1C events. The decay $\psi(3.1) \rightarrow p\bar{p}$ has been seen with a cross section ~2 nb (no correction for detection efficiency). The states $2\pi^+ 2\pi^-$, $\pi^+\pi^- K^+K^-$, and $3\pi^+ 3\pi^-$ are all clearly seen. These multipion cross sections are sufficiently small that the direct photon-hadron coupling with a vacuum polarization enhancement by the $\psi(3.1)$ form an important part of the observed yield. Figure 7a shows a normal e^+e^- annihilation to a single photon, which in turn couples to a final state f. If one writes a dispersion relation for the photon propagator (or alternatively for the vacuum polarization tensor) the effect

shown in Fig. 7b results, where the reaction $e^+e^- \to \gamma \to \psi \to \gamma \to f$ takes place. A nice example of such a final state is that of μ pairs, which were seen to have a large enhancement near the $\psi(3.1)$. Thus, one expects any direct $\gamma \to f$ channel to be enhanced in the same way as the μ-pair channel. Since the μ-pair channel is enhanced by a factor of ~20 one expects the nonresonant production of $2\pi^+ 2\pi^-$ or $3\pi^+ 3\pi^-$ to be enhanced by the same factor. Both these channels were measured to have cross sections ~1 nb at w = 3.0 GeV, meaning that one expects to see ~20 nb on the resonance; this is in fact about what is seen. If one assumes isospin and G parity conservation in the decay, then the assignment of even isospin and negative G parity is favored for $\psi(3.1)$.

Isolating exclusive channels in the decay of $\psi(3.7)$ has proven to be much more elusive than for $\psi(3.1)$. The only clearly established channel so far is a cascade from $\psi(3.7) \to \psi(3.1)$ + hadrons, and a 4C fit may clearly distinguished for $\psi(3.7) \to \psi(3.1) + \pi^+\pi^-$ where the $\psi(3.1) \to$ leptons. An example of such a decay is shown in Fig. 8. The branching fraction for $\psi(3.7) \to \psi(3.1)$ + anything is large, viz. ~1/2.

VI. ARE THERE OTHER RESONANCES?

A storage ring is both very good and very bad for finding narrow resonances. One of the ring's fundamental properties is its very high energy resolution, or stated alternatively its very narrow band-pass. Thus one must look very carefully in fine steps to find a narrow resonance lest it be missed entirely. On the other hand, when the resonance is found, the signal to noise ratio is immense; when the cross section rises by a factor of 100 over the normal rate (which was itself considered large a few years ago) there is no mistaking the existence of something so spectacular. Our discovery of $\psi(3.1)$ is a beautiful

case of serendipity. Our original experiment[5] aimed at taking data in 200 MeV steps on σ_H over as large a range of center-of-mass energy as possible. The avowed purpose was to check scaling and look for structure in the s dependence of σ_H. The first phase of this data taking was completed by March 1974. By then we noted an anomaly in σ_H at 3.2 GeV, and in May we acquired more data with finer steps. At first glance the new data showed no unusual behavior, but upon close examination, several runs taken at 3.1 GeV were internally inconsistent. Because of work being done on SPEAR, the next opportunity for data taking was in November. We then measured several points near 3.1 GeV and very soon found the $\psi(3.1)$. Thus, the original anomaly at w = 3.2 GeV was just the radiative tail of the $\psi(3.1)$, and the data at w = 3.10 were inconsistent because of small setting errors in the machine energy. Having found the $\psi(3.1)$ we immediately began a fine resolution scan and soon found the $\psi(3.7)$. The raw data of the scan are shown in Fig. 9,[4] where the $\psi(3.7)$ is clearly visible but no other resonances appear from 3.2 to 5.9 GeV.[9] The region below 3.2 GeV has not been completed for technical reasons. Table I shows the upper limits we place on $\int \sigma_H dw$ for the production of more, narrow, resonances.

Returning now to the original experiment, the coarse energy scan, the results may be seen in Fig. 10.[5] The observed total cross section falls from 37 nb at w = 2.6 GeV to a valley of ~18 nb in the 3.0 to 3.6 GeV region and has a peak of ~30 nb at w ~ 4.1 GeV. This peak is clearly quite different in character from the $\psi(3.1)$ and $\psi(3.7)$, since it is rather broad, 250 to 300 MeV. It is interesting to note, however, that the integrated "resonant" cross section is ~5.5 nb GeV, of the same order of magnitude as that of the $\psi(3.1)$ and $\psi(3.7)$. At this time we have too few events on or near this peak to attempt a seriously studying exclusive channels. We plan to accumulate much more

data in the near future for this purpose. In addition there are insufficient data to clearly distinguish whether the structure at 4.1 GeV is a resonance or just the opening of a new channel. Our data taking in the immediate future will concentrate on this region.

VII. EFFECTS OF $\psi(3.1)$ AND $\psi(3.7)$ ON TESTS OF QED

We have recently submitted for publication tests of QED based upon studying e^+e^- and $\mu^+\mu^-$ final states at 3.0, 3.8, and 4.8 GeV.[6] One must ask what effects would one see in these tests due to the two resonances? Because the e^+e^- cross section into our detector is ~13 times the $\mu^+\mu^-$ cross section, any lepton contamination is more serious in the $\mu^+\mu^-$ channel. For the test at w = 3.0 GeV the most important effect is the interference of the $\psi(3.1)$ with QED: the μ production is depressed by about 2% and the e-pair yield is very slightly raised. We originally quoted a ratio of μ pairs/e pairs divided by the expected ratio for QED = 0.95 ± 0.04. Using present information this becomes 0.97 ± 0.04. For the test at w = 3.8 GeV the most serious contamination is in the μ pairs due to the cascade $\psi(3.7) \rightarrow \psi(3.1)$ + (nothing seen) and subsequently $\psi(3.1) \rightarrow \mu^+\mu^-$. (Such events would have been accepted as valid QED events in the original analysis.) Such an effect yields an excess of ~1.4% μ pairs and a very slight excess of e pairs. The radiation by the incident beams can produce some $\psi(3.7)$ which can again decay into μ pairs. This effect is expected to be of the order of 0.4% excess for μ pairs and much less for e pairs. There is also a 0.4% excess in μ pairs due to $\psi(3.1)$ interference effects. Lastly, if $\psi(3.7)$ has the same quantum numbers as the photon, then there can be an interference, which will produce an excess of 0.8% μ pairs. Taken together we expect an enhancement of 2.2 to 3.0% in the μ pairs and much less for the e pairs. Our quoted μ/e ratio compared to QED is 1.05 ± 0.03 which becomes

1.02 or 1.03 ± 0.03. An extremely high precision experiment on QED might have led to discovery of the ψ's. Given a factor of 30 more data (assuming systematic errors could be appropriately reduced) one could, in principle discover that something was happening between 3.0 and 3.8 GeV because of the change of sign of the discrepancy in the μ/e ratio from QED. It is hardly likely, however, that this would happen in practice. The lesson is clear: tests of QED may not be as definitive as they appear at first sight.

VIII. CONCLUSION

We have to date 3 bona fide vector mesons, the ρ, ω, and ϕ, and we are offering a particle, the $\psi(3.1)$ which also shares the quantum numbers of the photon. It is interesting to compare some of their properties shown in Table II. Also, included in the table are the $\psi(3.7)$ and the 4.1 GeV enhancement, on the assumption that they are produced by single photon annihilation, and thus have spin 1; the case for this assumption is not proven. A striking feature of the table is that the partial widths to electrons of all these states are fairly similar, spanning a bit less than a factor of 10. At the same time the total widths differ enormously. Explaining these widths may reveal some exciting new ideas in physics. Finally, there is a glaring hole in the mass spectrum between the ϕ and $\psi(3.1)$. Unfortunately, SPEAR cannot be operated in that region, so we eagerly await other laboratories to study that region.

REFERENCES AND FOOTNOTES

1. J. J. Aubert et al., Phys. Rev. Letters 33, 1404 (1974).
2. J. E. Augustin et al., Phys. Rev. Letters 33, 1406 (1974).
3. G. S. Abrams et al., Phys. Rev. Letters 33, 1453 (1974).
4. A. M. Boyarski et al., "Search for Narrow Resonances in e^+e^- Annihilation," submitted to Phys. Rev. Letters.
5. J. E. Augustin et al., "Total Cross Section for Hadron Production by e^+e^- Annihilation," submitted to Phys. Rev. Letters.
6. J. E. Augustin et al., Phys. Rev. Letters 34, 233 (1975).

7. The radiative correction is large, ~30%, but well understood, since we are concerned only with the soft photon region.
8. This tolerance is 30 times smaller than the original design specifications for stability of the ring, and that such precision was actually reached is a monument to superb work done by technical people involved in the design and maintenance of the ring. The reader will also note that the absolute energy scale differs from our previously published results due to a calibration error in the primary laboratory reference.
9. The largest fluctuation is centered at 3.795 GeV, where 8 events were detected for 2 expected. There is an independent reason for considering this a fluctuation rather than a signal. A narrow resonance with an integrated cross section of 1470 nb MeV located at 3.795 GeV would yield a radiative tail of about 13 nb at 3.800 GeV. We have previously taken extensive data at 3.800 GeV and these data cannot reasonably support the existence of a radiative tail of that size (see Ref. 5). If this fluctuation is excluded, then the limit on a narrow resonance in the region 3.720 to 4.000 GeV changes from 1470 to 850 nb MeV.

TABLE I

Upper limits at the 90% confidence level for the radiatively corrected integrated cross section of a possible resonance. The units are nb MeV.

Mass range (GeV)	Resonance width (FWHM in MeV) 0[a]	10	20
3.200 to 3.500	970	1750	2230
3.500 to 3.690	780	1090	1540
3.720 to 4.000	1470[b]	1530	1860
4.000 to 4.400	620	1260	1820
4.400 to 4.900	580	1080	1310
4.900 to 5.400	780	1100	1720
5.400 to 5.900	800	1120	1470

[a]Width less than the mass resolution

[b]See footnote 9

TABLE II

Particle	Mass GeV	Γ_{tot} MeV	Γ_e keV
ρ	0.770 ±0.010	150 ±0.010	6.5 ±0.5
ω	0.7828 ± 0.0006	10 ±0.4	0.76 ± 0.17
ϕ	1.0197 ± 0.0003	4.2 ±0.2	1.34 ± 0.084
$\psi(3.1)$	3.095 ±0.005	0.077 ± 0.019	5.2 ±1.3
$\psi(3.7)$	3.684 ±0.005	0.2 - 1.0	2.2 ±0.6[a]
?(4.1)	4.15 ±0.1	250 - 300	4 ±1.2[a]

[a]Assuming J=1 and the branching fraction into hadrons ≈ 1.

FIGURE CAPTIONS

1. (a) Telescoped view of detector; (b) end view of detector.
2. Total cross section for hadron production vs. center-of-mass energy for $\psi(3.1)$, corrected for detector acceptance.
3. Cross section for production of lepton pairs integrated over the range $|\cos\theta| < 0.6$ vs. center-of-mass energy; (a) electrons, (b) muons. No correction has been applied for the loss of events having $|\cos| > 0.6$.
4. Predictions for the ratio of μ-yield to e-yield for no interference and complete interference.
5. Experimental data for the ratio of μ-yield to e-yield. The hypothesis of no interference can be excluded by having a confidence level of less than 0.15%.
6. Total cross section for hadron production vs. center-of-mass energy for $\psi(3.7)$, corrected for detector acceptance.
7. Graphs of photon production of a final state f. (a) normal single photon, (b) single photon enhanced by ψ intermediate state.
8. Reconstructed end view of an event $\psi(3.7) \rightarrow \psi(3.1) + \pi^+\pi^-$, where the $\psi(3.1)$ decays into a pair of electrons.
9. Raw data for fine mesh energy scan. The ordinate is proportional to the total cross section for hadron production.
10. Total cross section for hadron production vs. center-of-mass energy.

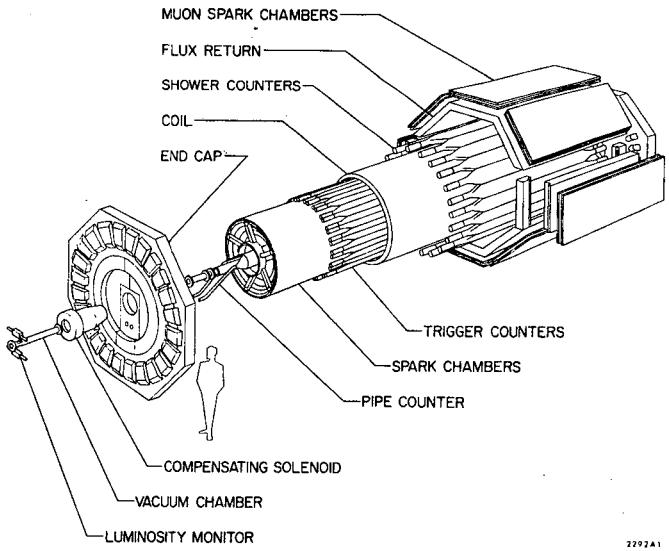
MUON SPARK CHAMBERS
FLUX RETURN
SHOWER COUNTERS
COIL
END CAP
TRIGGER COUNTERS
SPARK CHAMBERS
PIPE COUNTER
COMPENSATING SOLENOID
VACUUM CHAMBER
LUMINOSITY MONITOR
2292A1

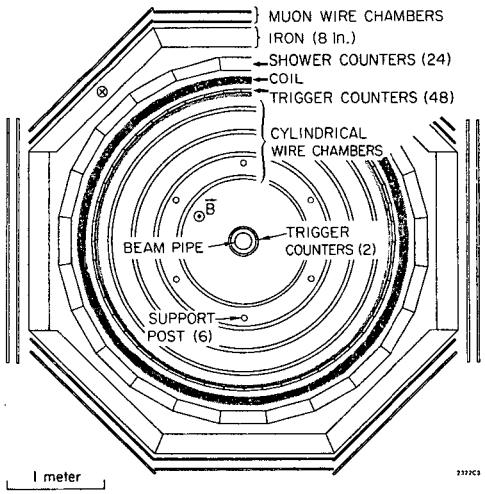
MUON WIRE CHAMBERS
IRON (8 In.)
SHOWER COUNTERS (24)
COIL
TRIGGER COUNTERS (48)
CYLINDRICAL
WIRE CHAMBERS
B
BEAM PIPE
TRIGGER
COUNTERS (2)
SUPPORT
POST (6)
1 meter

Fig 1

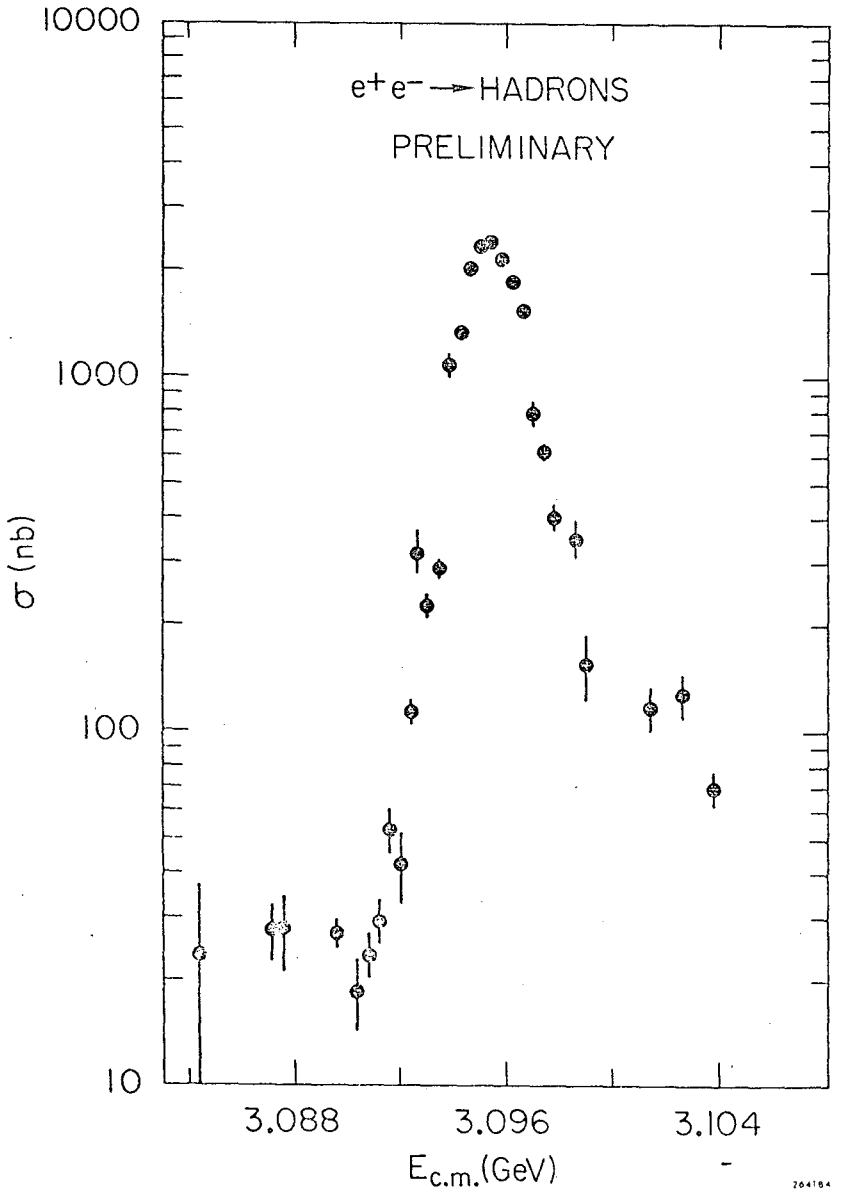
10000
1000
100
10
σ (nb)
e+e− → HADRONS
PRELIMINARY
3.088
3.096
3.104
Ec.m.(GeV)

Fig. 2

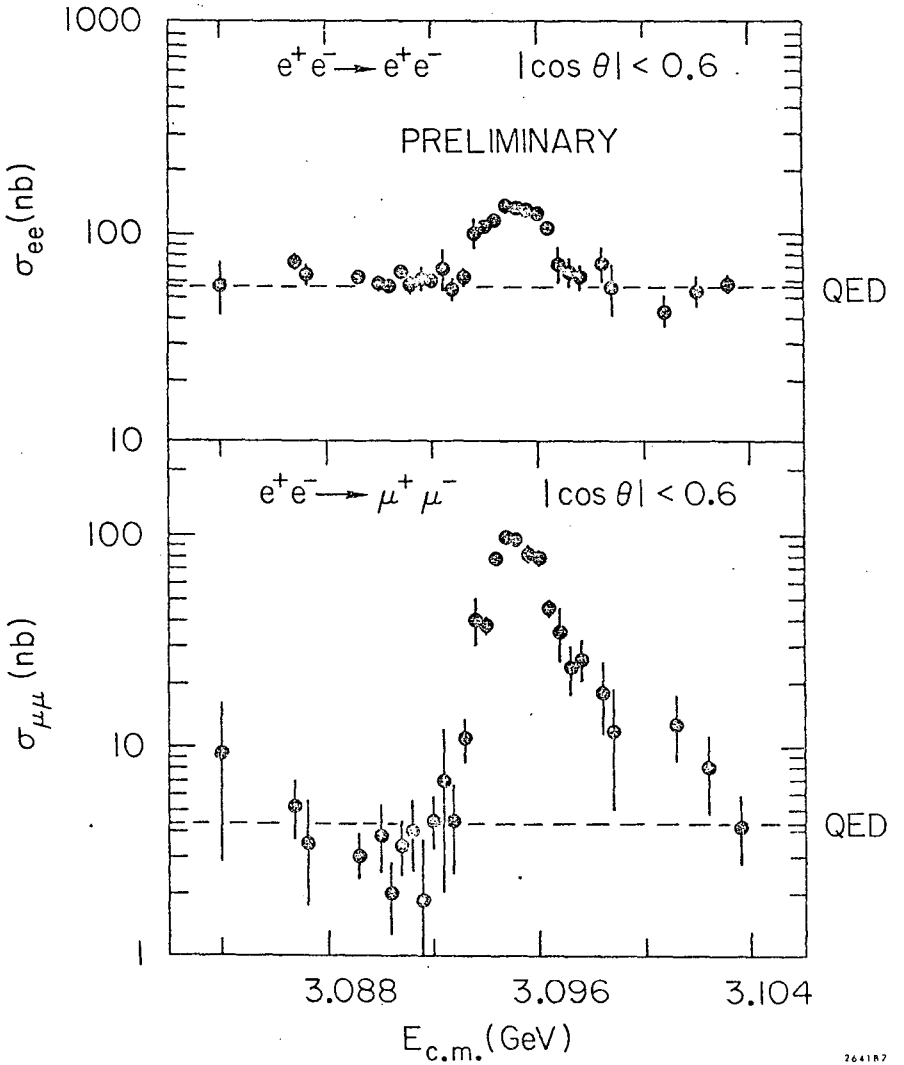
1000
100
10
σee(nb)
e+e− → e+e−
|cos θ| < 0.6
PRELIMINARY
QED
100
10
1
σμμ (nb)
e+e− → μ+μ−
|cos θ| < 0.6
QED
3.088
3.096
3.104
Ec.m.(GeV)

Fig. 3

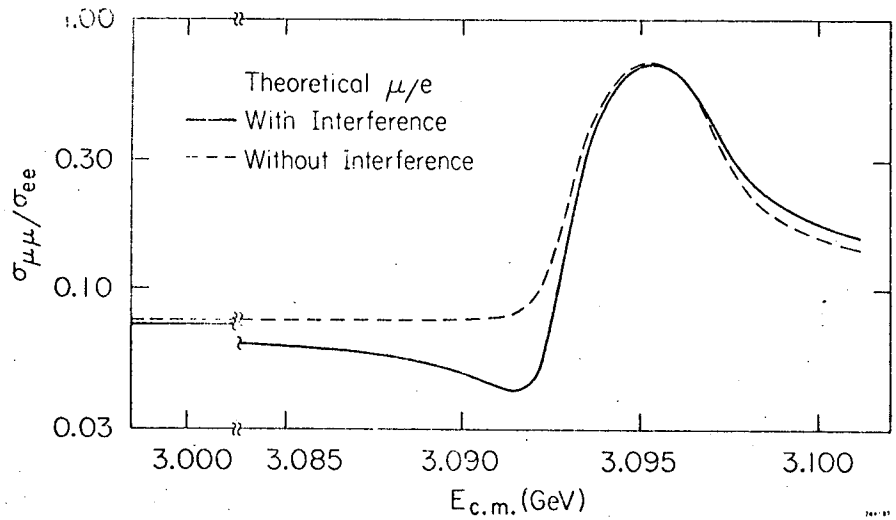

Fig. 4

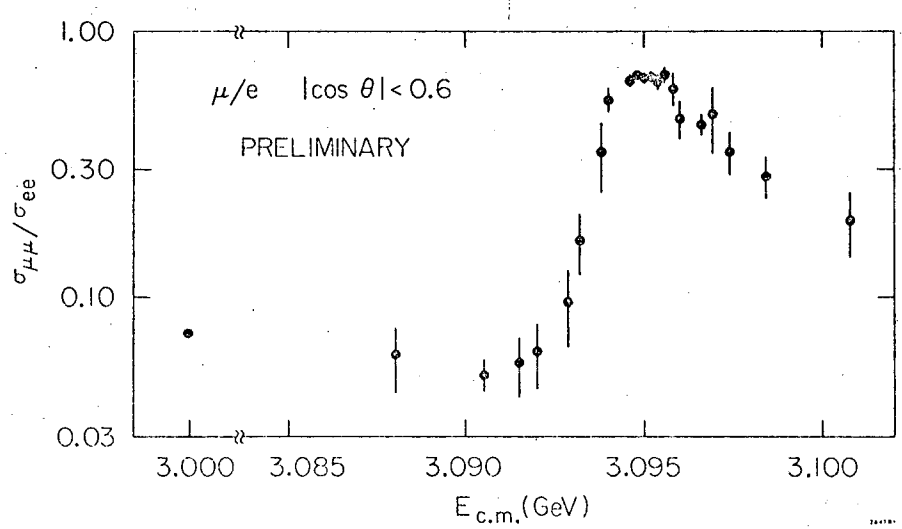

Fig. 5

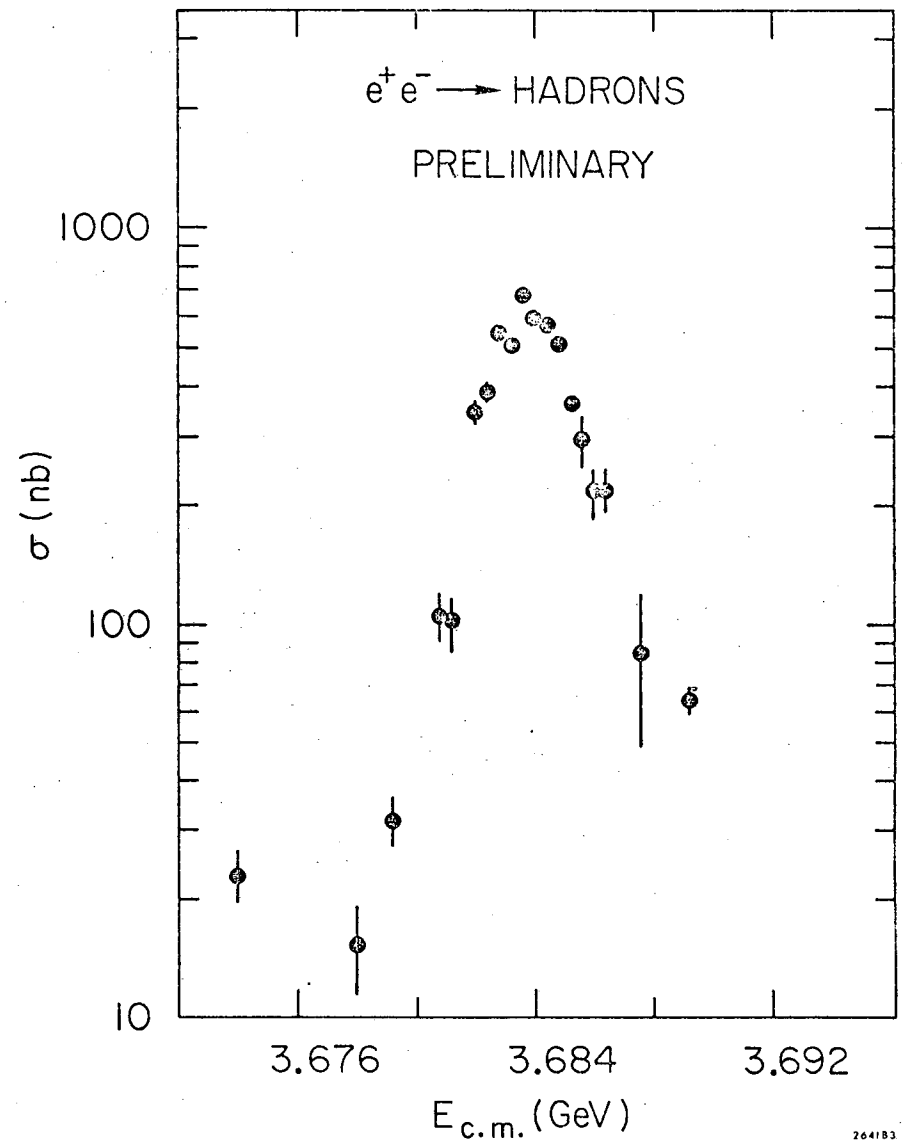

Fig. 6

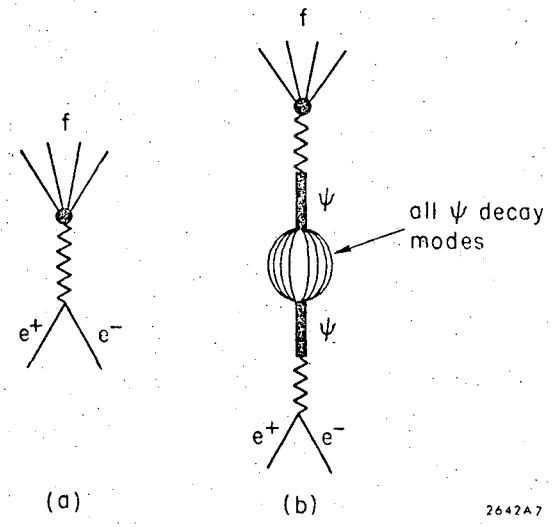

Fig. 7

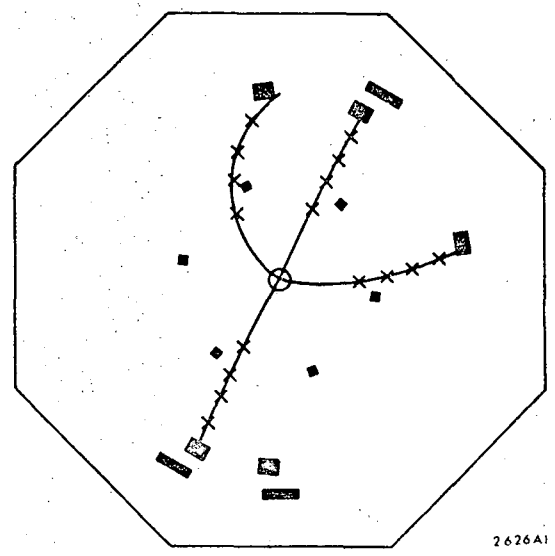

Fig. 8

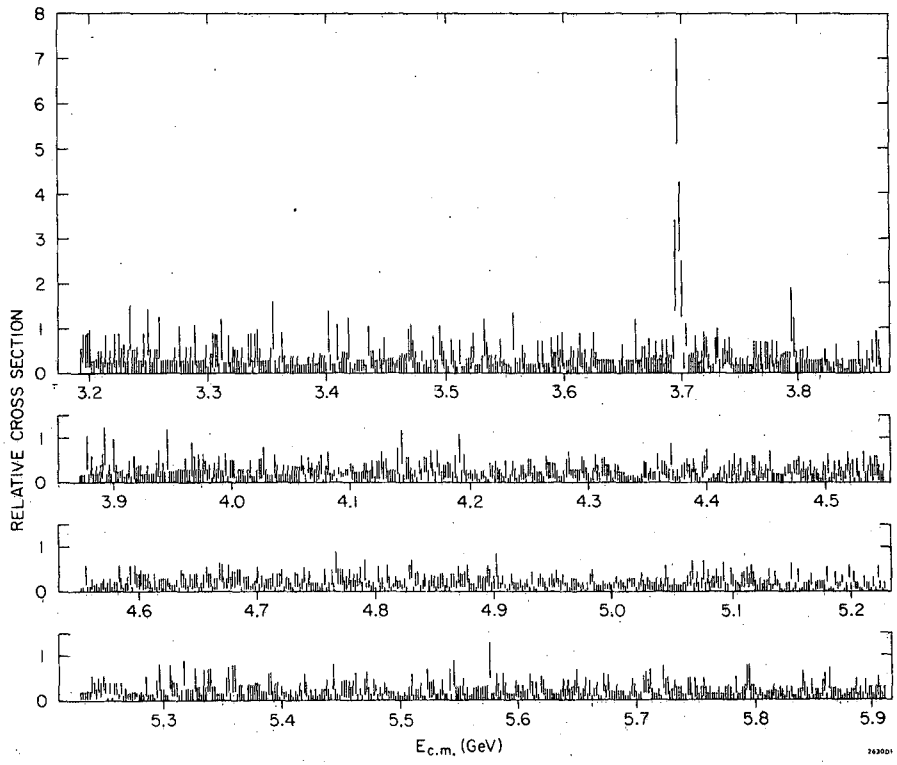
RELATIVE CROSS SECTION
$E_{c.m.}$ (GeV)

Fig. 9

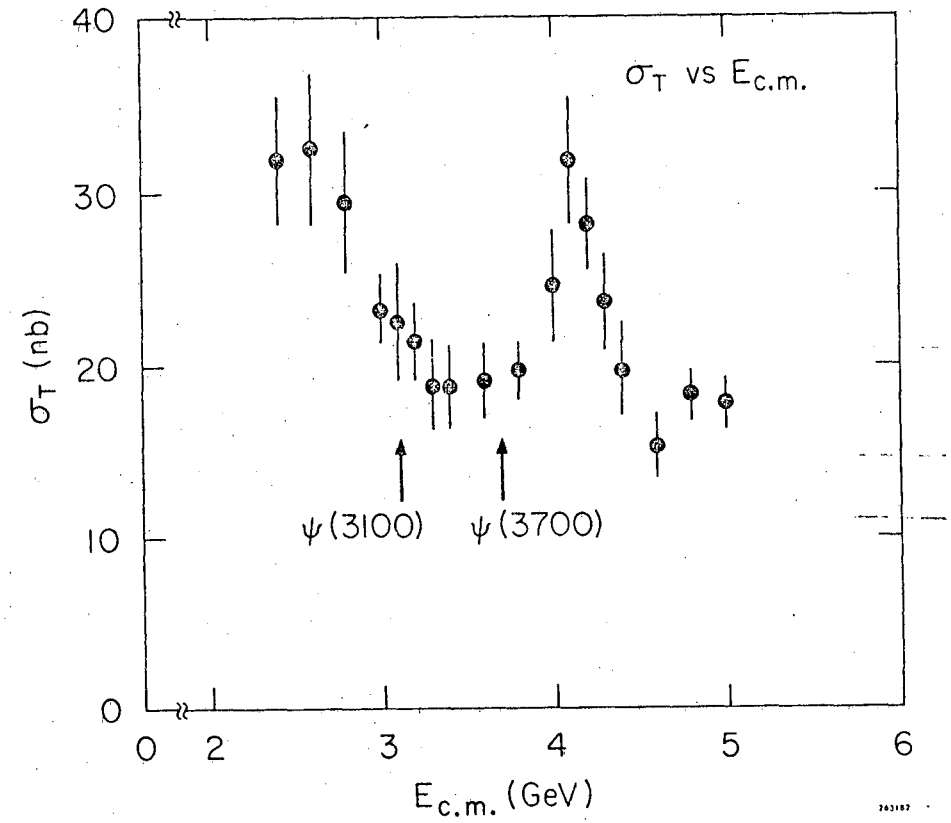
σ_T vs $E_{c.m.}$
σ_T (nb)
$\psi(3100)$
$\psi(3700)$
$E_{c.m.}$ (GeV)

Fig. 10

0 0 0 0 4 3 0 1 4 3 7

LEGAL NOTICE

This report was prepared as an account of work sponsored by the United States Government. Neither the United States nor the United States Atomic Energy Commission, nor any of their employees, nor any of their contractors, subcontractors, or their employees, makes any warranty, express or implied, or assumes any legal liability or responsibility for the accuracy, completeness or usefulness of any information, apparatus, product or process disclosed, or represents that its use would not infringe privately owned rights.

TECHNICAL INFORMATION DIVISION
LAWRENCE BERKELEY LABORATORY
UNIVERSITY OF CALIFORNIA
BERKELEY, CALIFORNIA 94720