LBL-36710
UC-414

Lawrence Berkeley Laboratory
UNIVERSITY OF CALIFORNIA

Engineering Division

Presented at the Applied Superconductivity Conference, Boston, MA, October 16–21, 1994, and to be published in the IEEE Transactions on Applied Superconductivity

Magnetization Effects from the g-2 Inflector Magnet Superconductor

M.A. Green and W. Meng

October 1994

U. C. Lawrence Berkeley Laboratory
Library, Berkeley

FOR REFERENCE

Not to be taken from this room

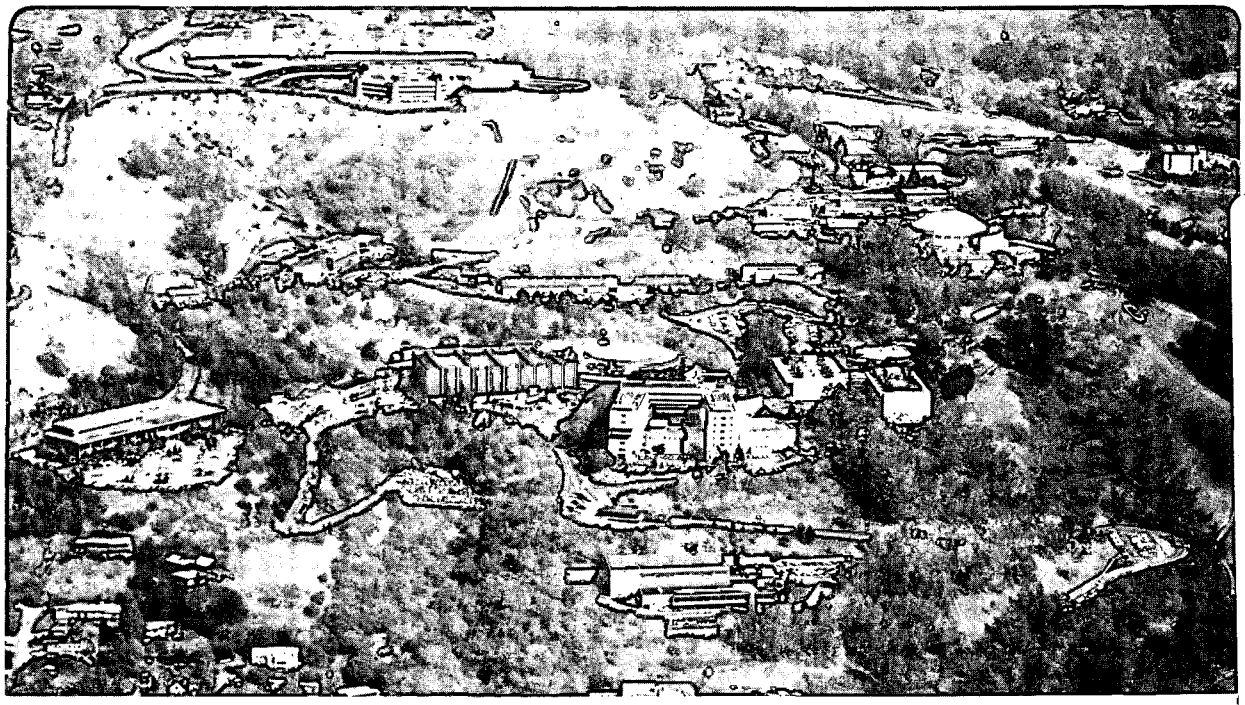

REFERENCE COPY
Does Not
Circulate
Bldg. 50 Library.
Copy 1
LBL-36710

Prepared for the U.S. Department of Energy under Contract Number DE-AC03-76SF00098

DISCLAIMER

This document was prepared as an account of work sponsored by the United States Government. While this document is believed to contain correct information, neither the United States Government nor any agency thereof, nor the Regents of the University of California, nor any of their employees, makes any warranty, express or implied, or assumes any legal responsibility for the accuracy, completeness, or usefulness of any information, apparatus, product, or process disclosed, or represents that its use would not infringe privately owned rights. Reference herein to any specific commercial product, process, or service by its trade name, trademark, manufacturer, or otherwise, does not necessarily constitute or imply its endorsement, recommendation, or favoring by the United States Government or any agency thereof, or the Regents of the University of California. The views and opinions of authors expressed herein do not necessarily state or reflect those of the United States Government or any agency thereof or the Regents of the University of California.

LBL-36710

Magnetization Effects from the g-2 Inflector Magnet Superconductor

M. A. Green
Lawrence Berkeley Laboratory
University of California
Berkeley, CA 94720

W. Meng
Brookhaven National Laboratory
Upton, NY 11973

October 1994

* This work was performed with the support of the Office of High Energy and Nuclear Physics, United States Department of Energy under BNL contract number DE-AC02-76CH00016 and LBL contract number DE-AC03-76SF00098.

LBL-36710
ASC 94, Boston MA
16-21 October 1994

Magnetization Effects from the g-2 Inflector Magnet Superconductor

Michael A. Green
Lawrence Berkeley Laboratory, Berkeley CA 94720

W. Meng
Brookhaven National Laboratory, Upton NY, 11973

Abstract- **The g-2 muon storage ring at Brookhaven National Laboratory will have a 1.7 meter long superconducting inflector magnet for injection of the muon beam into the storage ring. The field within the inflector is designed to be nearly zero. The inflector bucks out the main dipole field, but generates little or no stray field of its own. A portion of the field that remains is the field that is generated by circulating currents in the inflector magnet superconductor. Because the magnetization field has a different structure from field generated by the transport current, the magnetization field can adversely affect the field quality within the muon storage ring good field region. Correction of the effects of inflector superconductor magnetization and its effect on the good field region in the storage ring is discussed.**

I. BACKGROUND

This report discussed a superconducting inflector dipole for a storage ring magnet system for an experiment for precision measurements of the g-2 muon value at the Brookhaven National Laboratory[1]. The goal of the experiment is measure the g-2 value to an accuracy of 0.35 ppm, which is a factor of 20 better than the present experimental accuracy of 7.3 ppm from the latest experiment at CERN[2]. The experiment requires a very high precision storage ring for muons at a momentum of 3.094 GeV/c.

The principle equipment for the g-2 experiment is a superferric storage ring with superconducting coils[1,3]. The average central induction of magnet is 1.4513 T and the central orbit radius for the storage ring is 7.112 m. The induction over the muon storage volume with a cross-sectional diameter of 90 mm must be known to about 0.1 parts per million. Within this field volume, the integrated field around the ring must be good to about one part in one million. The field uniformity and stability in the orbit volume are unusually stringent for a field volume of this size. As a result, one must get the beam into the ring without perturbing the field.

The g-2 storage ring consists of three superconducting solenoid coils. The two smaller inner solenoids (13.4 m in diameter) are hooked up in opposition to the larger outer solenoid (15.1 m in diameter) to form a dipole field. The magnetic flux is carried by a continuous C shaped iron yoke. The required uniform dipole field is created by shaping the iron pole pieces and by correction coils on the pole faces. Muon beam focusing is achieved through the use of electrostatic quadrupoles distributed around the ring within the magnet gap. The muon beam is injected into the ring through the iron and through the outer coil cryostat through a shielded inflector magnet that has nearly a zero field where the injected beam passes into the storage ring. The field in the inflector dipole must be nearly zero without perturbing the good quality magnetic field in the storage ring outside the inflector.

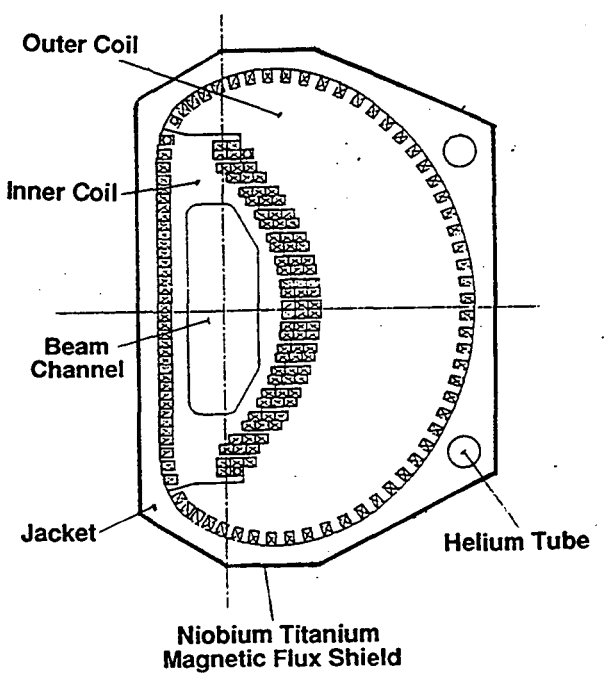

Fig. 1 A Cross-section View of the Inflector Dipole

Manuscript Received 16 October 1994. This work was performed with the support of the Office of High Energy and Nuclear Physics, U. S. Dept. of Energy

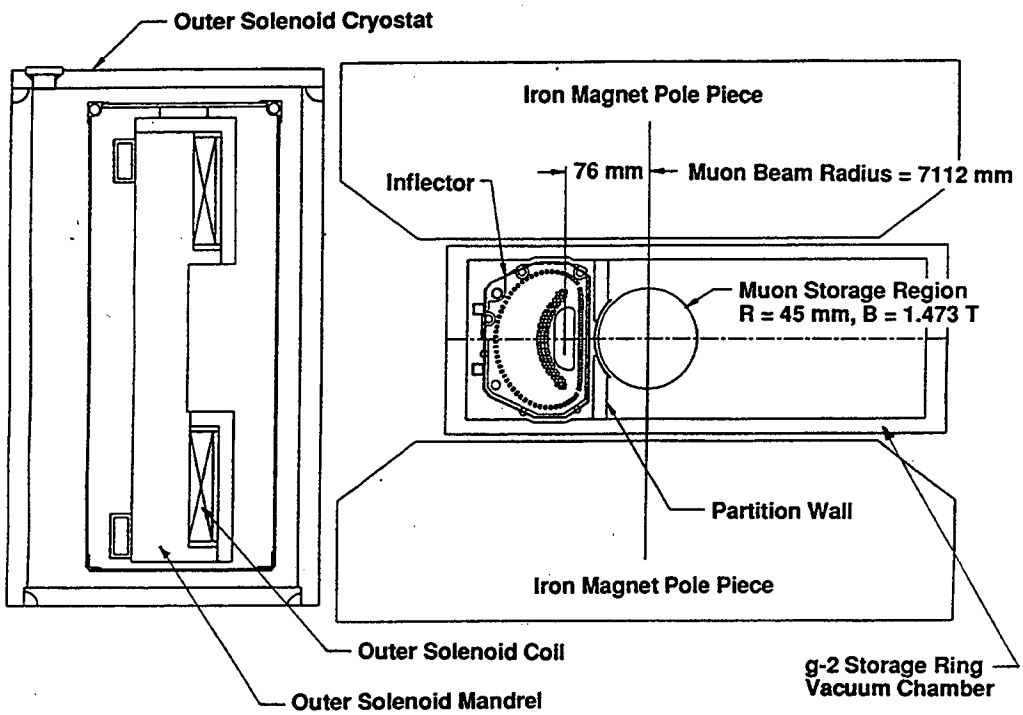

Fig. 2. The Inflector Location Relative to the Muon Beam at the Downstream End

II. THE INFLECTOR DIPOLE

The inflector is an air core dipole with coils designed so that the magnet swallows its own magnetic flux[4,5]. As a result, the stray field from the inflector is greatly reduced. A cross-section of the inflector dipole coils is shown in Fig. 1 on the previous page. The inflector coil design alone reduces the external magnetic induction over a factor of 550 at a distance of 76 mm from the magnetic center of the inflector dipole. (Fig. 2 above shows the position of the inflector at its closest approach to the circulating muon beam in the storage ring.) At the inflector end, the leakage field is different from the leakage field at the inflector center The basic parameters of the g-2 inflector dipole are shown in Table 1.

A further reduction of the leakage induction will be achieved through the use of a niobium titanium shield that must operate in a background induction of 1.4513 tesla. The shield consists of alternating layers of copper and niobium titanium[6]. The critical current density in the Nb-Ti shield is about 1200 A mm^{-2} at 4.2 K and 5 T. In order for the niobium titanium shield to be affective, the inflector and the shield must be at a temperature above 10 K while the g-2 storage ring magnets are charged to full field. Once the storage ring reaches full field, the inflector and its shield can be cooled to 4.5 K. This freezes the magnetic flux from the storage ring into the shield. At this point, the inflector dipole can be charged. The shield sees the change in the magnetic flux due to the charging of the inflector. Most of the remaining magnetic flux leaking from the inflector is kept in the inflector by the Nb-Ti and Cu shield.

Table 1 Parameters for the g-2 Superconducting Inflector Dipole

Inflector Magnet Parameters	
Inflector Dipole Length (mm)	1700.
Dipole Aperture (mm)	18 x 56
Design Central Induction(T)	1.4513
Design Operating Temperature (K)	~5.0
Number of Turns	88
Design Current (A)	2850
Inflector Self Inductance (mH)	~2.2
Stored Energy at Design Current (kJ)	~9.0
Superconductor Parameters	
Bare Matrix Dimensions (mm)	2.0 x 3.0
Insulated Matrix Dimensions (mm)	2.1 x 3.1
Pure Aluminum to S/C ratio	3.7
Copper to S/C Ratio	0.9
Filament Diameter (micron)	23.3
Number of Filaments	~3050
Twist Pitch (mm)	~25
J at 4.2 K and 5 T (A mm^{-2})	~2700

III. MAGNETIZATION EFFECTS FROM THE INFLECTOR DIPOLE SUPERCONDUCTOR

The magnetization of the superconductor is caused by changing magnetic field in the superconductor. When the superconducting filaments see a changing field, a current doublet is formed in each of the filaments[7]. The strength of the magnetic field generated by magnetization is proportional to the current doublet strength, which in turn is proportional to the filament diameter and the filament superconductor critical current density.

When one does a power series expansion of the field generated by a current doublet, one sees a field structure that is different from that of a single current. The field structure is also a function of the relationship of the two currents in the doublet with each other (the doublet angle). The doublet angle is the angle of the flux line that generated the current doublet $\pm\pi/2$ (depending on the sign of dB/dt). As a result, a uniform field dipole can have a magnetization field that is rich is higher multipoles while the transport current field has none of these multipoles[7]. A dipole that is self shielded (eats its own flux) will not be self shielded in terms of the magnetization field. Thus the magnetization field can be a significant part of the leakage field.

The superconductor magnetization currents decay with time[8]. The decay time constants are long (from 1000 to 10000 seconds depending on the conductor). Not only does the magnetization field potentially leak out of the inflector, but this leakage field changes with time. Given the length of the magnetization field time constant, it may not be practical to wait several time constants before taking data in the g-2 experiment.

Table 2 on the following page presents the calculated multipole structure of both the transport current field and the magnetization current field for three different cases. These cases are as follows: 1) The inflector is in the superconducting state but carries no transport current while the main g-2 dipole is charged to full field; 2) The inflector is charged to its full field while the main g-2 dipole is turned; and 3) The inflector and the main dipole are charged to their full field together.

A. Magnetization from an Unpowered Inflector

When the inflector sits in the main g-2 dipole uniform field, the magnetic flux lines travel all in the same direction and all superconductor filaments are magnetized with the same doublet angle. The fields inside the inflector and outside the inflector have the same value. Because the current doublets are lined up with the uniform field lines, almost no magnetization field is generated either inside or outside the inflector dipole. The inflector is invisible from the standpoint of its effect on the quality of the field in the g-2 bending magnet.

B. Magnetization from a Powered Inflector in Zero Field

When the inflector is charged to its full field alone, the magnetization dipole within the inflector is about 1.9 parts in 10000 of the inflector dipole field. The quadrupole and sextupole due to magnetization are quite large compared to those multipoles generated by the transport current. Outside the inflector, the magnetization dipole is about 18 parts in 10000 of the leakage dipole. The quadrupole and sextupole terms are even larger compared to their respective transport current multipoles due to leakage flux (77 parts in 10000 and 195 parts in 10000 respectively). In all cases, the magnetization dipole term has a sign that is negative compared to the transport current dipole.

C Magnetization when Both Magnets are Powered

When the inflector and the main g-2 dipole are charged together, the structure of the magnetization field inside the inflector dipole changes. The magnetization dipole is changed little but the higher multipole magnetization terms are reduced. The magnetization multipoles outside the inflector increase greatly when the main g-2 dipole and the inflector are charged together. The magnetization dipole represents about 4.4 percent of the leakage dipole term. The magnetization quadrupole and sextupole terms are larger (13.2 percent and 9.9 percent of the transport current leakage flux terms respectively) The change in the magnetization multipoles with time may have an effect on the g-2 experiment because the field will not be known locally to 0.1 ppm. The magnetization leakage flux should be shielded along with the transport current leakage flux.

IV. THE EFFECT OF THE NB-TI SHIELD ON THE LEAKAGE FLUX DUE TO MAGNETIZATION

The Nb-Ti shield reduces the leakage flux from the inflector. In order for the Nb-Ti shield to be affective, the following procedure has to be used: 1) The inflector temperature is kept above 10 K so that the superconductor in the inflector and the Nb-Ti shield is in the normal state. 2) The main g-2 dipole is charged to its full field while the inflector and its shield are in the normal state. 3) The inflector and its shield are cooled to 4.5 K. The flux lines from the main dipole are frozen in the shield. There is no magnetization in either the shield or the inflector. 4) The field is turned on in the inflector. The Nb-Ti shield shields out the stray field due to the inflector transport current and the magnetization currents. The currents induced in the shield by the inflector stray field do not decay with time because the shield superconductor operates below J_c. During recent tests, the shield reduced the inflector stray field over a factor of forty

Table 2 Transport Current and Magnetization Multipoles Inside and Outside the Inflector (The value of the multipoles is in tesla at a reference radius of 10 mm)

Multipole Number	Magnitude of the Multipole @ 10 mm (T) Inside the Inflector @ x = 30 mm Transport Current	Magnetization	Outside the Inflector @ x = -40 mm Transport Current	Magnetization
Inflector with Zero Current in an External Field of 1.4513 T				
1	1.451300	-0.000003	1.451300	-0.000003
2	0.000000	0.000000	0.000000	0.000000
3	0.000000	0.000000	0.000000	0.000000
4	0.000000	0.000000	0.000000	0.000000
5	0.000000	0.000000	0.000000	0.000000
Inflector on with 2850 A without an External Field				
1	-1.511267	0.000280	0.002738	-0.000005
2	0.003574	0.000182	0.000174	0.000001
3	0.007778	0.000058	-0.000031	0.000001
4	0.002710	0.000018	-0.000011	0.000000
5	-0.000177	0.000006	-0.000002	0.000000
Inflector with 2850 A in an External Field of 1.4513 T				
1	-0.059967	0.000279	1.454038	0.000104
2	0.003574	-0.000065	0.000174	0.000023
3	0.007778	-0.000037	-0.000031	0.000003
4	0.002710	-0.000002	-0.000011	0.000000
5	-0.000177	0.000006	-0.000002	0.000000

V. CONCLUDING COMMENTS

Magnetization of the superconductor in the g-2 inflector dipole affects the quality of the magnetic field inside and outside the magnet. Since the muon beams make only a single pass through the inflector, the quality of the magnetic field within the inflector bore is not of much concern. The stray field from the inflector can have a detrimental effect on the muon beam that circulates around the g-2 storage ring. The integrated field error around the storage ring due to the inflector stray field without the Nb-Ti shield on the outside is about 30 ppm. Superconductor magnetization in the inflector can contribute as much as five percent of the field errors.

The Nb-Ti shield reduces the stray field from the inflector at least an order of magnitude. The shield removes the stray field due to superconductor magnetization as well as stray field due to the transport currents. As the stray field due to superconductor magnetization decays, the circulating current in the shield adjusts so that the effects of this decay are greatly reduced. With the niobium titanium shield in place, the error in the integrated dipole field around the storage ring should be less than one part per million

VI. ACKNOWLEDGMENT

This work was performed for the g-2 group at the Brookhaven National Laboratory with the support of the Office of High Energy and Nuclear Physics, United States Department of Energy under BNL contract number DE-AC02-76CH00016 and LBL contract number DE-AC03-76SF00098.

REFERENCES

[1] "Muon g-2 Design Report," Brookhaven National Laboratories, Associated Universities Inc., Upton, NY. 11973, AGS-821, April 1994

[2] J. Bailey et. al., *Nucl. Phys.* **B150**, 1 (1979)

[3] The members of the g-2 Collaboration,. "The g-2 Storage Ring Superconducting Magnet System," *IEEE Trans. Mag.* **30**, No. 4, p 2423, (1994)

[4] G. T. Danby, et. al., "Magnetic Flux Shielding for the Precision Muon g-2 Storage Ring Superconducting Inflector," *IEEE Trans. Mag.* **30**, No. 4, p 1766, (1994)

[5] F. Krienen, et. al., "The Superconducting Inflector Dipole for the g-2 Muon Storage Ring," presented at the 1994 Applied Superconductivity Conference, Boston MA

[6] I Itoh, et. al., "Magnetic Shielding Properties of Nb-Ti/Nb/Cu Multilayer Composite Tubes," *IEEE Trans. Applied Superconductivity* **3**, No. 1, p 177, (1993)

[7] M. Green, "Residual Fields in Superconducting Magnets," Proceedings of the MT-4 Conference at Brookhaven National Laboratory, p 339 (1972)

[8] W. A. Gilbert et. al., "Magnetic Field Decay in Model SSC Dipoles," *IEEE Trans.* **MAG-25**, No. 2, p 1459, (1989)

LAWRENCE BERKELEY LABORATORY
UNIVERSITY OF CALIFORNIA
TECHNICAL AND ELECTRONIC
INFORMATION DEPARTMENT
BERKELEY, CALIFORNIA 94720