LBL-36815
UC-401
Preprint

Lawrence Berkeley Laboratory

UNIVERSITY OF CALIFORNIA

CHEMICAL SCIENCES DIVISION

Submitted to Journal of Chemical and Engineering Data

Vapor-Liquid Equilibria of Copolymer/Solvent and Homopolymer/Solvent Binaries: New Experimental Data and Their Correlation

R.B. Gupta and J.M. Prausnitz

February 1995

REFERENCE COPY
Does Not
Circulate
Bldg. 50 Library.
LBL-36815
Copy 1

Prepared for the U.S. Department of Energy under Contract Number DE-AC03-76SF00098

DISCLAIMER

This document was prepared as an account of work sponsored by the United States Government. While this document is believed to contain correct information, neither the United States Government nor any agency thereof, nor the Regents of the University of California, nor any of their employees, makes any warranty, express or implied, or assumes any legal responsibility for the accuracy, completeness, or usefulness of any information, apparatus, product, or process disclosed, or represents that its use would not infringe privately owned rights. Reference herein to any specific commercial product, process, or service by its trade name, trademark, manufacturer, or otherwise, does not necessarily constitute or imply its endorsement, recommendation, or favoring by the United States Government or any agency thereof, or the Regents of the University of California. The views and opinions of authors expressed herein do not necessarily state or reflect those of the United States Government or any agency thereof or the Regents of the University of California.

LBL-36815
UC-401

Vapor-Liquid Equilibria of Copolymer/Solvent and Homopolymer/Solvent Binaries: New Experimental Data and Their Correlation

Ram B. Gupta and John M. Prausnitz

Department of Chemical Engineering
University of California, Berkeley

and

Chemical Sciences Division
Lawrence Berkeley Laboratory
University of California
Berkeley, California 94720

February 1995

This work was supported by the Director, Office of Energy Research, Office of Basic Energy Sciences, Chemical Sciences Division, of the U.S. Department of Energy under Contract No. DE-AC03-76SF00098.

Vapor-Liquid Equilibria of Copolymer/Solvent and Homopolymer/Solvent Binaries: New Experimental Data and Their Correlation.

Ram B. Gupta and John M. Prausnitz

Department of Chemical Engineering, University of California,

and Chemical Sciences Division, Lawrence Berkeley Laboratory,

University of California, Berkeley, CA 94720-1462.

Abstract

Sixty-six isothermal data-sets for vapor-liquid equilibria (VLE) for polymer/solvent binaries have been obtained using a gravimetric sorption technique, in the range 23.5 to 80 °C. Solvents studied were: acetone, acetonitrile, n-butanol, 1,2-dichloroethane, chloroform, cyclohexane, n-hexane, methanol, octane, pentane, and toluene. Copolymers studied were: poly(acrylonitrile-co-butadiene), poly(styrene-co-acrylonitrile), poly(styrene-co-butadiene), poly(styrene-co-butyl methacrylate), poly(vinyl acetate-co-ethylene), and poly(vinyl acetate-co-vinyl chloride). All copolymers were random copolymers. Some homopolymers were also studied: polyacrylonitrile, polybutadiene, poly(butyl methacrylate), poly(ethylene oxide), polystyrene, and poly(vinyl acetate).

Composition of the copolymer may have a surprising effect on VLE. Normally, deviation from ideal behavior lies between those of the constituent homopolymers, according to the copolymer composition, as observed for cyclohexane/poly(ethylene-co-vinyl acetate) and chloroform/poly(styrene-co-butyl methacrylate). However, the strong non-ideal behavior observed for systems containing hydrocarbons and poly(butadiene-co-acrylonitrile) shows that the effect of acrylonitrile is in excess of that expected from the copolymer composition. The Perturbed Hard-Sphere-Chain (PHSC) equation of state was used to represent VLE of the copolymer solutions studied here.

Submitted to the *Journal of Chemical and Engineering Data*, Feb. 2, 1995.

Introduction

Vapor-liquid equilibria (VLE) in polymer/solvent systems are necessary for a variety of applications including surface acoustic-wave vapor sensors (Ballantine and Wohltjen, 1989; Grate et al., 1992); recovery of organic vapors from waste-air streams using a polymeric membrane (Baker et al., 1987; Matsumoto et al., 1991); pervaporation (Maeda et al., 1991), and other polymeric membrane-separation processes; polymer devolatilization (High and Danner, 1990); vapor-phase photografting (Kubota et al., 1990); and for optimum formulation of paints and coatings (Napper, 1983). For rational process and product design, we require experimental data and correlations based on molecular thermodynamics.

Copolymers are gaining an increasing amount of commercial interest because of their unique physical properties. World production of copolymers has been continuously rising over the last twenty years (Wohlfarth, 1993). However, published VLE studies for copolymer/solvent are rare. Some experimental results (Bonner and Prausnitz, 1974; Corneliussen et al., 1963; Iwai et al.,1990; Moore and Shuttleworth, 1963; Panayiotou and Vera, 1984) describe polymer/solvent VLE for finite solvent concentrations. By contrast, there are about 1000 data-sets published for homopolymer/solvent systems (Wohlfarth, 1994). There is a need for more experimental studies for copolymer solutions. This work contributes toward meeting that need.

The purpose of this work is to obtain VLE data for copolymer/solvent binaries and for some of their parent homopolymer/solvent binaries; and to examine the effect of copolymer composition on VLE. The experimental data are correlated using an equation of state based on molecular thermodynamics.

Experimental Apparatus and Procedure

Several experimental methods are available for measuring the vapor pressure of a solvent in a polymer solution (Danner and High, 1993). These include: inverse gas

chromatography, piezoelectric sorption, differential vapor pressure, gravimetric sorption, light scattering, and turbidimetry analysis. We have used a gravimetric sorption technique because it gives direct measurement of the VLE of polymer/solvent systems. This classic method has been described in detail by Panayiotou and Vera (1984). Figure 1 gives a schematic of the apparatus. A copolymer or homopolymer sample in an aluminum pan is suspended by a sensitive, calibrated quartz spring in an evacuated glass chamber. The glass chamber is kept in a constant-temperature air bath. In a typical experiment, a known amount (25 to 50 mg) of polymer is loaded on the pan and evacuated to remove any trace moisture, oligomers, or monomers present. Now the length of the spring is measured with a cathetometer to find the polymer mass, using a predetermined calibration curve. Solvent vapor is introduced into the evacuated system by quickly opening and closing the solvent valve. The system is left for equilibration for several hours; subsequent pressure and spring-length readings yield pressure as a function of polymer-phase composition. Readings are taken with increasing pressure. All experiments are at pressures below 90% of the saturation vapor pressure to avoid solvent condensation in the system.

Quartz springs (Ruska Instruments Corp., Houston, TX) have a sensitivity of 1 mg/mm with the maximum load limit of 250 milligrams. These springs are equipped with reference pointers on the top and bottom of the spring. Quartz spring calibration (length versus weight, a linear correlation) is independent of temperature in the range of interest (23 to 80 °C). The buoyancy effect on the calibration was also negligible. Spring length was measured using a cathetometer with a precision of 0.05 mm.

Pressure was measured using a mercury manometer kept at the same temperature as that of the polymer solution. There was no solvent condensation on the mercury meniscus as the system pressure was always lower than the solvent saturation pressure. The pressure was measured with a precision of 1 Torr, except in the cases of cyclohexane

(23.5 °C), octane (60 °C), and toluene (23.5 °C) where the precision was 0.1 Torr. The temperature of the air bath was controlled within 0.5 °C of the set point.

Materials

All polymers were supplied by Scientific Polymer Products (SPP), Ontario, NY, except poly(butyl methacrylate) which was from Aldrich. These polymers are listed in Table I along with their molecular weight (Mw), polydispersity (Mw/Mn), and glass-transition temperature (T_g). All the copolymers used here were random copolymers. Glass-transition temperatures for copolymers were calculated from the Fox-Flory equation:

$$1/T_g = F_1/T_{g1} + F_2/T_{g2} \tag{1}$$

where T_g = glass transition temperature of the copolymer; T_{g1}, T_{g2} = glass-transition temperatures of parent homopolymers; and F_1, F_2 = weight fraction of monomers 1 and 2 respectively. All temperatures are in Kelvins.

Both copolymers and homopolymers had polydisperse molecular weights. These were used without further fractionation because polymer molecular weight has negligible influence on the VLE behavior provided the molecular weight is above about 10,000 (see for example, Kun et al., 1993; Bonner and Prausnitz, 1974).

Solvents were used after degassing by a freeze/thaw procedure described by Panayiotou and Vera (1984).

Experimental Data

Table I gives a summary of all the new data obtained in this study. Table II gives experimental VLE data for polymer/solvent binary systems. Most of the experiments were performed at a temperature higher than the glass-transition temperature of the

polymer. A total of sixty-six data-sets were obtained by varying solvent, copolymer composition, and temperature.

Brief Summary of Theory for Correlation

To model VLE of copolymer solutions, we have used a perturbed hard-sphere-chain (PHSC) equation of state (Song et al., 1993, 1994a, 1994b, 1994c). For ordinary VLE at low pressures, it if often possible to use Flory-Huggins theory for a reasonable correlation of polymer/solvent VLE data. But we would like to use a model that can describe both upper and lower critical solution temperatures, VLE phase diagrams at high pressures, and account for solvent compressibility. For binary polymer solutions, the PHSC theory successfully reproduces all types of observed LLE phase diagrams, including upper or lower critical solution temperatures (UCST or LCST), or both, including closed partial-miscibility loops (Song et al., 1994c).

The PHSC equation-of-state is applicable to fluid mixtures containing any number of components over the entire range of fluid conditions. Since the PHSC equation-of-state uses molecular parameters that have physical significance, it provides a potentially useful method for predicting thermodynamic properties outside the range of available data.

The PHSC equation-of-state for heteronuclear chains is

$$\frac{p}{\rho k_B T} = 1 + \rho \sum_{i=1}^{m}\sum_{j=1}^{m} x_i x_j \left[\sum_{k=1}^{r_i}\sum_{l=1}^{r_j} b_{ij,kl} g_{ij,kl} \right] - \sum_{i=1}^{m} x_i \sum_{k=1}^{r_i-1} \left[g_{ii,k,k+1} - 1 \right] - \frac{\rho}{k_B T} \sum_{i=1}^{m}\sum_{j=1}^{m} x_i x_j \left[\sum_{k=1}^{r_i}\sum_{l=1}^{r_j} a_{ij,kl} \right] \quad (2)$$

where, p = pressure; T = absolute temperature; ρ = number density; m = number of components; x = mole fraction; k_B = Boltzmann constant; a = attractive energy parameter; b = second virial coefficient of hard spheres; r = number of hard spheres per chain; and g = pair radial distribution function of hard spheres at contact. Subscript ij,kl

denotes the pair containing k^{th} segment of component i and l^{th} segment of component j. Parameters a and b are temperature-dependent as given by the Song-Mason (1989) method. For pure solvents and homopolymers, these are:

$$a = \frac{2}{3}\pi\sigma^3 \varepsilon F_a(k_B T / \varepsilon) \tag{3}$$

$$b = \frac{2}{3}\pi\sigma^3 F_b(k_B T / \varepsilon) \tag{4}$$

where, σ = distance of separation at minimum potential energy; ε = well depth of pair potential; F_a, and F_b are universal functions.

Parameters a and b for a pair of dissimilar segments A and B are given as:

$$a_{AB} = \frac{2}{3}\pi\sigma_{AB}^3 \varepsilon_{AB} F_a(k_B T / \varepsilon_{AB}) \tag{5}$$

$$b_{AB} = \frac{2}{3}\pi\sigma_{AB}^3 F_b(k_B T / \varepsilon_{AB}) \tag{6}$$

where

$$\sigma_{AB} = \frac{1}{2}(\sigma_A + \sigma_B)(1 - \lambda_{AB}) \tag{7}$$

$$\varepsilon_{AB} = \sqrt{\varepsilon_A \varepsilon_B}(1 - \kappa_{AB}) \tag{8}$$

Parameters σ_A, ε_A pertain to segment A; κ_{AB}, λ_{AB} are adjustable inter-segmental parameters.

The pair correlation function is

$$g_{ij,kl} = \frac{1}{(1-\eta)} + \frac{2}{3}\frac{\xi_{ij,kl}}{(1-\eta)^2} + \frac{1}{2}\frac{\xi_{ij,kl}^2}{(1-\eta)^3} \tag{9}$$

where the packing fraction is

$$\eta = \frac{\rho}{4}\sum_{i=1}^{m} x_i \sum_{k=1}^{r_i} b_{i,k} \tag{10}$$

and

$$\xi_{ij,kl} = \frac{\rho}{4}\left[\frac{b_{i,k}b_{j,l}}{b_{ij,kl}}\right]^{1/3} \sum_{i=1}^{m} x_j \sum_{k=1}^{r_i} b_{i,k}^{2/3} \tag{11}$$

In summary, each pure solvent or homopolymer is characterized by three molecular constants: r, segment number per molecule; σ, segment size; and ε, non-bonded segment pair interaction energy. These molecular constants are obtained from readily available pure-component data for thermodynamic properties such as vapor pressures, densities, and compressibilities (Song et al., 1994b). Pure-component parameters for 77 solvents and for 22 polymers have been collected by Lambert (1995). For each unlike pair of segments, usually one and only rarely two binary parameters, (κ and λ) are needed for the mixture; these can be determined from experimental mixture properties.

Results and Discussion

The PHSC equation-of-state has been applied to some data sets from the experimental section. The experimental molecular weights of the polymers were used in the calculations; however, if these were not available, a 100,000 molecular weight has been assumed because molecular weight has negligible effect on the VLE for high-molecular-weight polymer solutions. Pure-component molecular parameters (r, ε, and σ) were obtained from pure-component properties (Lambert 1995).

Figure 2 shows pressure versus weight fraction solvent in the polymer phase for the system cyclohexane/poly(ethylene-co-vinyl acetate) at 80 °C. At a given pressure, solvent absorption in the copolymer increases as its ethylene content rises. This rise is expected because the hydrocarbon segments of cyclohexane are better liked by the similar

hydrocarbon segments of ethylene, whereas polar segments of vinyl acetate are disliked by the solvent molecules. The solubility of cyclohexane falls in proportion to the vinyl-acetate concentration in the copolymer. All binary parameters κ were set equal to zero, whereas three λ binary parameters were regressed using the experimental data. The PHSC equation of state can accurately correlate the experimental data.

Figure 3 shows VLE for a system containing chloroform and a copolymer poly(styrene-co-butyl methacrylate), and chloroform with the parent homopolymers, polystyrene and poly(butyl methacrylate). Figure 3 shows relative pressure P/P_{sat} (P_{sat} = saturation pressure of the solvent at the given temperature) instead of P because data at 50 °C are compared with data at 70 °C; normalizing pressure with P_{sat} tends to eliminate the temperature effect in a small temperature range such as here. Going from polystyrene to poly(styrene 50%-co-butyl methacrylate) to poly(butyl methacrylate), increases the solubility of chloroform because of favorable polar interaction between chloroform and butyl methacrylate segments. Chloroform also has some polar interaction with styrene segments, but these are not as strong as those with the butyl methacrylate segments. Solubility of chloroform rises in proportion to butyl methacrylate content in the polymer.

For the system shown in Figure 3, all binary parameters κ were set equal to zero. Solvent/homopolymer λ parameters were obtained from their VLE experimental data. The polystyrene/poly(butyl methacrylate) λ parameter was obtained from the copolymer/solvent VLE data. With only one adjustable parameter for each data set, the PHSC equation of state can correlate the VLE behavior.

Figures 4-6 show VLE data for hydrocarbons with poly(butadiene-co-acrylonitrile). For these systems, solubility is not a simple function of copolymer composition.

Figure 4 compares VLE data for cyclohexane/poly(butadiene-co-butyl methacrylate) with theory. At a given pressure, progressing from polybutadiene to poly(butadiene-co-12% acrylonitrile) to poly(butadiene-co-51% acrylonitrile), the

solubility of cyclohexane decreases dramatically with the acrylonitrile content in the copolymer. Cyclohexane has negligible solubility in polyacrylonitrile due to strong repulsion between non-polar cyclohexane segments and highly polar acrylonitrile segments. Binary parameters for the PHSC equation of state were regressed from the VLE data for cyclohexane in polybutadiene and poly(butadiene-co-21% acrylonitrile) as shown in Figure 4. VLE for cyclohexane in poly(butadiene-co-51%acrylonitrile) were predicted; the prediction is in excellent agreement with the experimental data.

Figure 5 shows results for hexane/poly(butadiene-co-acrylonitrile). In this case, VLE behavior is similar to that for cyclohexane/poly(butadiene-co-acrylonitrile) shown in Figure 4. The solubility of hexane decreases dramatically with the acrylonitrile content in the copolymer. PHSC can successfully correlate this behavior with adjustable binary parameters given in Figure 5. The predicted VLE for hexane-poly(butadiene-co-51% acrylonitrile) is in good agreement with experiment.

Finally, Figure 6 shows results for pentane with poly(butadiene-co-acrylonitrile). Results are similar to those for hexane (Figure 5) and cyclohexane (Figure 4). The solubility of pentane decreases dramatically with acrylonitrile content in the copolymer. The PHSC equation of state can successfully correlate the data for pentane with only one binary parameter for each pair as shown in Figure 6. Polybutadiene/polyacrylonitrile binary interaction parameters were the same as those used in Figures 4 and 5.

Conclusions

New VLE data have been obtained for 44 copolymer/solvent binaries and for 15 homopolymer/solvent binaries, using a gravimetric absorption technique. "Expected" non-ideal behavior has been obtained for systems such as cyclohexane/poly(ethylene-co-vinyl acetate), and chloroform/poly(styrene-co-butyl methacrylate). However, strong non-linear non-ideal behavior has been observed for systems containing hydrocarbons and poly(butadiene-co-acrylonitrile).

The Perturbed Hard-Sphere-Chain (PHSC) equation of state for mixtures of heteronuclear chains can represent vapor-liquid equilibria of real copolymer solutions using one or at most two binary parameters for each pair of unlike segments.

Acknowledgment

This work was supported by the Director, Office of Energy Research, Office of Basic Energy Science, Chemical Sciences Division of the U.S. Department of Energy under contract No. DE-AC03-76SF0098. For additional financial support, the authors are grateful to the donors of the Petroleum Research Fund (administered by the American Chemical Society), E.I. du Pont de Nemours (Philadelphia, PA), and Koninklijke Shell (Amsterdam, The Netherlands). For experimental assistance, the authors are grateful to Gary Yeung, Bin W. Zhao, and Kathy Yi. Helpful discussions with David Soane, Toshiaki Hino, Yuhua Song, and Steven Lambert are much appreciated.

References

Baker, R.W.; Yoshioka, N.; Mohr, J.M.; Kahn, A.J. Separation of Organic Vapors from Air. *J. Membr. Sci.* **1987**, 31, 259.

Ballantine, D.S., Jr.; Wohltjen, H. Surface Acoustic Wave Device for Chemical Analysis. *Anal. Chem.* **1989**, 61, 704A-715A.

Bawn, C.E.H.; and Wajid, M.A. High Polymer Solutions. Part 7. Vapour Pressure of Polystyrene Solutions in Acetone, Chloroform and Propyl Acetate. *Trans. Faraday Soc.* **1956**, 52, 1658.

Bonner, D.C.; and Prausnitz, J.M. Thermodynamic Properties of Some Concentrated Polymer Solutions. *J. Polym. Sci.* **1974**, 21, 51-73.

Corneliussen, R.; Rice, S.A.; Yamakawa, H. On the Thermodynamic Properties of Solutions of Polar Polymers. A Comparision of Experiment and Thoery. *J. Chem. Phys.* **1963**, 38, 1768-1778.

Danner, R. P.; High, M. S. Handbook of Polymer Solution Thermodynamics, DIPPR, AIChE, New York, 1993.

Grate, J.W.; Klusty, M.; McGill, R.A.; Abraham, M.H.; Whiting, G.; Andonian-Haftvan, J. The Predominant Role of Swelling-induced Modulus Changes of the Sorbent Phase in Determining the Responses of Polymer-Coated Surface Acoustic Wave Vapor Sensor. *Anal. Chem.* **1992**, 64, 610-624.

High, M. S.; Danner, R. P., Prediction of Solvent Activities in Polymer Solutions. *Fluid Phase Equil.* **1990**, 55, 1-15.

Iwai, Y. and Arai, Y. Measurement and Prediction of Solubilities of Hydrocarbon Vapors in Molten Polymers. *J. Chem. Engr. Japan* **1989**, 22: 155-161.

Iwai, Y.; Miyamoto, S.; Ikeda, H.; Arai, Y. Measurement and Prediction of solubilities of Ethylbenzene vapor in Styrene-butadiene Rubbers. *Fluid Phase Equil.* **1991**, 68,197-205.

Kubota, H.; Yoshino, N.; Ogiwara, Y. Vapor Phase Photografting on Low-Density Film In Binary Monomer System. *J. Appl. Polym. Sci.* **1990**, 39, 1231.

Kun, W.; Yifeng, C.; Jinyan, F.; Hu, Y. Vapor-Liquid Equilibria for Mixtures of Toluene and Polystyrene with Different Molecular Weights, *Chinese J. of Chem. Eng.* **1993**, 1, 65-73.

Lambert, S. M. Molecular Thermodynamics of Liquid-Liquid Equilibria in Polymer Mixtures. Ph.D. thesis in progress at the University of California, Berkeley, 1995.

Matsumoto, K.; Ishii, K.; Kuroda, T.; Inoue, K.; Iwama, A. Membrane Process for Organic Vapor Recovery from Air. *Polym. J.* **1991**, 23, 491-499.

Maeda, Y.; Tsuyumoto, M.; Karakane, H.; Tsugaya, H. Separation of Water-Ethanol Mixture by Pervaporation Through Hydrolyzed Polyacrylonitrile Hollow Fibre Membrane. *Polym. J.* **1991**, 23, 501-511.

Moore, W.R.; Shuttleworth, R. Thermodynamic Properties of Solutions of Cellulose Acetate and Cellulose Nitrate. *J. Polym. Sci., Pt A 1* **1963**, 733-749.

Napper, D.H. Polymeric Stabilization of Colloidal Dispersions. London: Academic Press, Inc., 1983.

Panayiotou, C.P.; Vera, J.H. Thermodynamic of Polymer-Polymer-Solvent and Block Copolymer-Solvent Systems. I. Experimental Systems. *Polym. J.* **1984**, 16, 89.

Song, Y.; Mason, E.A. Statistical-Mechanical Theory of a New Analytical Equation of State. *J. Chem. Phys.* **1989**, 91, 7840-7853.

Song, Y., Lambert, S.M. and Prausnitz, J.M. Fluid-Phase Equilibria for Polymer-Solvent Systems from a Perturbed Hard-Sphere-Chain Equation of State Based on the Integral Theory of Fluids. Annual AIChE Meeting, St. Louis, MO, November, 1993.

Song, Y., Lambert, S.M. and Prausnitz, J.M. Equation of State for Mixtures of Hard-Sphere Chain Including Copolymers. *Macromolecules* **1994a**, 27: 441-448.

Song, Y., Lambert, S.M. and Prausnitz, J.M. A Perturbed Hard-Sphere-Chain Equation of State for Normal Fluids and Polymers. *Ind. & Eng. Chem. Res.* **1994b**, 33: 1047-1057.

Song, Y., Lambert, S.M. and Prausnitz, J.M. Liquid-Liquid Phase Diagrams for Binary Polymer Solutions from a Perturbed Hard-Sphere-Chain Equation of State. *Chem. Eng. Sci.* **1994c**, 49, 2765-2775.

Wohlfarth, C. Calculation of phase equilibria in random copolymer systems. *Makromol. Chem. Theory Simul.* **1993**, 2, 605-635.

Wohlfarth, C. Vapour-liquid equilibrium data of binary polymer solutions, vapour-pressures, henry-constants and segment-molar excess gibbs free energies. Elsevier, Amsterdam, 1994.

Table I. Summary of new experimental vapor-liquid equilibrium data for polymer/solvent binaries.

Polymer (weight % copolymer composition)	Polymer Characteristics				Solvent (temperature, °C)										
	Mw	$\frac{Mw}{Mn}$	T_g (°C)	Catalog No. (SPP)*	Acetone	Acetonitrile	n-Butanol	1,2Dichloroethane	Chloroform	Cyclohexane	n-Hexane	Methanol	n-Octane	n-Pentane	Toluene
Polyacrylonitrile	150,000		85	134		60		70, 80		60	60			60	
Poly(acrylonitrile 21%-co-butadiene)			-64	523		60				60	60		60	60	
Poly(acrylonitrile 33%-co-butadiene)			-50	528		60			60		60			60	
Poly(acrylonitrile 51%-co-butadiene)			-25	530		60			60	60	60		60	60	
cis 1,4-Polybutadiene	250,000		-85	206		60			60	60	60			60	
Poly(butyl methacrylate)			27						70						
Poly(ethylene oxide)	$5x10^6$		-67	345					60						
Polystyrene	110,000	1.1	100	580				70, 80							
Poly(styrene 70%-co-acrylonitrile)	185,000		95	495				70, 80							
Poly(styrene 5%-co-butadiene)			-80	199	50				50	60					35
Poly(styrene 23%-co-butadiene)			-60	200	50, 60				50	23.5, 60	70			60	35
Poly(styrene 45%-co-butadiene)			-30	201	50, 60				50	23.5, 60	70			60	
Poly(styrene 50%-co-butyl methacrylate)	200,000	1.9	56	595	60				70			80			
Poly(vinyl acetate)	194,000	3.1	30	024C			80		60						
Poly(vinyl acetate 9%-co-ethylene)			-118	506			80		60						
Poly(vinyl acetate 25%-co-ethylene)	88,000	4.4	-103	245					60	80					
Poly(vinyl acetate 50%-co-ethylene)	250,000	4.2	-74	785					60	80					
Poly(vinyl acetate 70%-co-ethylene)	280,000	5.6	-42	786					60	80					
Poly(vinyl acetate 12%-co-vinyl chloride)	30,000	2.1	75	063			80								
Poly(vinyl acetate 10%-co-vinyl chloride)	115,000		76	068								80			

*SPP = Scientific Polymer Products, Ontario, NY.

Table II. New experimental vapor/liquid equilibrium data for polymer/solvent binaries.
(W_1 = weight fraction solvent in polymer phase; T = temperature; and P = pressure)

Acetone/Poly(styrene-co-butadiene)

Acetone/Poly(styrene 5%-co-butadiene)

P(Torr)	W_1	T = 50 °C
103	0.003	
199	0.023	
272	0.040	
311	0.056	
340	0.067	
343	0.101	
349	0.072	
354	0.067	
355	0.066	
383	0.078	
392	0.079	
400	0.080	
414	0.091	
447	0.115	
448	0.110	
460	0.120	

Acetone/Poly(styrene 23%-co-butadiene)

P(Torr)	W_1	T = 50 °C
103	0.030	
199	0.024	
272	0.049	
311	0.061	
340	0.071	
343	0.109	
349	0.075	
355	0.058	
383	0.085	
392	0.088	
400	0.091	
414	0.100	
447	0.125	
448	0.120	
460	0.130	

P(Torr)	W_1	T = 60 °C
95	0.009	
198	0.021	
305	0.037	
411	0.062	
514	0.092	
610	0.128	
636	0.147	
686	0.183	
734	0.231	

Acetone/Poly(styrene 45%-co-butadiene)

P(Torr)	W_1	T = 50 °C
103	0.004	
199	0.022	
272	0.046	
311	0.061	
340	0.074	
343	0.117	
349	0.078	
354	0.074	
355	0.071	
383	0.088	
392	0.092	
400	0.095	
414	0.105	
447	0.137	
448	0.130	
460	0.141	

P(Torr)	W_1	T = 60 °C
95	0.009	
198	0.023	
305	0.044	
411	0.069	
514	0.101	
610	0.140	
636	0.163	
686	0.197	
734	0.258	

Acetone/Poly(styrene 50%-co-butyl methacrylate)

P(Torr)	W_1	T = 60 °C
67	0.005	
126	0.013	
176	0.022	
260	0.027	
325	0.044	
387	0.053	
452	0.071	
507	0.090	
613	0.133	
640	0.144	
678	0.164	
719	0.201	
740	0.224	
753	0.254	

Acetonitrile/Polyacrylonitrile

P(Torr)	W_1	T = 60 °C
50	0.011	
100	0.022	
137	0.032	
174	0.041	
244	0.061	
284	0.076	

Acetonitrile/Poly(acrylonitrile-co-butadiene)

Acetonitrile/Poly(acrylonitrile 21%-co-butadiene)

P(Torr)	W_1	T = 60 °C
51	0.011	
103	0.026	
196	0.065	
226	0.085	
256	0.112	
295	0.187	

Acetonitrile/Poly(acrylonitrile 33%-co-butadiene)

P(Torr)	W_1	T = 60 °C
50	0.023	
100	0.043	
137	0.065	
174	0.091	
244	0.148	
284	0.206	

Acetonitrile/Poly(acrylonitrile 51%-co-butadiene)

P(Torr)	W_1	T = 60 °C
51	0.021	
103	0.047	
196	0.111	
226	0.144	
256	0.182	
295	0.293	

Acetonitrile/cis 1,4-Polybutadiene

P(Torr)	W_1	T = 60 °C
50	0.010	
100	0.913	
137	0.017	
174	0.024	
244	0.030	
284	0.039	

Butanol/Poly(vinyl acetate)

P(Torr)	W_1	T = 80 °C
20	0.005	
39	0.018	
60	0.036	
81	0.081	
92	0.092	
104	0.011	
114	0.012	

Butanol/Poly(vinyl acetate-co-ethylene)

Butanol/Poly(vinyl acetate 9%-co-ethylene)

P(Torr)	W_1	T = 80 °C
20	0.006	
39	0.012	
60	0.017	
81	0.027	
92	0.031	
104	0.034	
114	0.036	

Butanol/Poly(vinyl acetate-co-vinyl chloride)

Butanol/Poly(vinyl acetate 12%-co-vinyl chloride)

P(Torr)	W_1	T = 80 °C
20	0.007	
39	0.016	
60	0.022	
81	0.033	
92	0.040	
104	0.044	
114	0.046	

1,2 Dichloroethane/Polyacrylonitrile

P(Torr)	W_1	T = 70 °C
122	0.025	
159	0.031	
200	0.040	
231	0.043	
274	0.046	
305	0.050	
329	0.054	
345	0.058	
368	0.061	

P(Torr)	W_1	T = 80 °C
168	0.017	
205	0.020	
272	0.024	
343	0.038	
376	0.044	
432	0.053	
446	0.057	

455	0.060

1,2 Dichloroethane/Polystyrene

P(Torr)	W_1	T = 70 °C
122	0.064	
159	0.092	
200	0.127	
231	0.152	
274	0.209	
305	0.244	
329	0.289	
345	0.306	
368	0.352	

P(Torr)	W_1	T = 80 °C
168	0.070	
205	0.090	
272	0.125	
343	0.221	
376	0.257	
432	0.331	
446	0.360	
455	0.377	

1,2 Dichloroethane/Poly(styrene 70%-co-acrylonitrile)

P(Torr)	W_1	T = 70 °C
122	0.009	
159	0.026	
200	0.048	
231	0.139	
274	0.196	
305	0.243	
329	0.281	
345	0.296	
368	0.339	

P(Torr)	W_1	T = 80 °C
168	0.009	
205	0.039	
272	0.090	
343	0.251	
376	0.279	
432	0.348	
446	0.376	
455	0.389	

Chloroform/Poly(acrylonitrile 33%-co-butadiene)

P(Torr)	W_1	T = 60 °C
102	0.080	
201	0.170	
202	0.172	
297	0.262	
396	0.372	
449	0.424	
497	0.485	
550	0.563	

Chloroform/cis 1,4-Polybutadiene

P(Torr)	W_1	T = 60 °C
102	0.114	
201	0.224	
202	0.228	
297	0.336	
396	0.444	
449	0.494	
497	0.548	
550	0.615	

Chloroform/Poly(butyl methacrylate)

P(Torr)	W_1	T = 70 °C
100	0.093	
198	0.176	
301	0.268	
402	0.347	
491	0.434	
591	0.520	
645	0.566	

Chloroform/Poly(ethylene oxide)

P(Torr)	W_1	T = 60 °C
105	0.082	
211	0.276	
301	0.379	
399	0.459	
438	0.497	
496	0.540	
542	0.567	
594	0.585	
653	0.609	

Chloroform/Poly(styrene 50%-co-butyl methacrylate)

P(Torr)	W_1	T = 70 °C
100	0.078	
198	0.148	
301	0.222	
402	0.292	
491	0.369	
591	0.455	
645	0.512	

Chloroform/Poly(styrene-co-butadiene)

Chloroform/Poly(styrene 5%-co-butadiene)

P(Torr)	W_1	T = 50 °C
64	0.040	
122	0.106	
191	0.204	
237	0.272	
287	0.341	
341	0.457	
357	0.489	
375	0.537	
403	0.580	
423	0.638	

Chloroform/Poly(styrene 23%-co-butadiene)

P(Torr)	W_1	T = 50 °C
64	0.046	
122	0.111	
191	0.206	
237	0.270	
287	0.338	
341	0.449	
357	0.482	
375	0.514	
403	0.566	
423	0.621	

Chloroform/Poly(styrene 45%-co-butadiene)

P(Torr)	W_1	T = 50 °C
64	0.043	
122	0.107	
191	0.205	
237	0.272	
287	0.343	
341	0.463	
357	0.500	
375	0.534	
403	0.592	
423	0.650	

Chloroform/Poly(vinyl acetate)

P(Torr)	W_1	T = 60 °C
105	0.088	
211	0.150	
301	0.245	
399	0.334	
438	0.371	
496	0.416	
542	0.444	
594	0.466	
653	0.490	

Chloroform/Poly(vinyl acetate-co-ethylene)

Chloroform/Poly(vinyl acetate 9%-co-ethylene)

P(Torr)	W_1	T = 60 °C
105	0.031	
211	0.067	
301	0.104	
399	0.147	
438	0.168	
496	0.196	
542	0.216	
594	0.235	
653	0.253	

Chloroform/Poly(vinyl acetate 25%-co-ethylene)

P(Torr)	W_1	T = 60 °C
104	0.062	
200	0.140	
299	0.228	
399	0.320	
449	0.358	
499	0.401	
548	0.441	
595	0.481	

Chloroform/Poly(vinyl acetate 50%-co-ethylene)

P(Torr)	W_1	T = 60 °C
104	0.098	
200	0.202	
299	0.303	
399	0.398	
449	0.439	
499	0.477	
548	0.512	
595	0.552	

Chloroform/Poly(vinyl acetate 70%-co-ethylene)

P(Torr)	W_1	T = 60 °C
104	0.059	
200	0.161	
299	0.287	
399	0.403	
449	0.450	
499	0.489	
548	0.526	
595	0.573	

Cyclohexane/Poly(acrylonitrile-co-butadiene)

Cyclohexane/poly(acrylonitrile 21%-butadiene)

P(Torr)	W_1	T = 60 °C
103	0.030	
147	0.062	
198	0.084	
240	0.114	
267	0.177	
268	0.176	
286	0.210	
298	0.216	
323	0.283	

Cyclohexane/Poly(acrylonitrile 51%-co-butadiene)

P(Torr)	W_1	T = 60 °C
103	0.007	
143	0.011	
147	0.015	
196	0.024	
198	0.024	
240	0.032	
267	0.047	
298	0.060	
323	0.091	

Cyclohexane/cis 1,4-Polybutadiene

P(Torr)	W_1	T= 60 °C
101	0.082	
152	0.134	
202	0.189	
252	0.272	
286	0.338	

Cyclohexane/Poly(styrene-co-butadiene)

Cyclohexane/Poly(styrene 5%-co-butadiene)

P(Torr)	W_1	T = 60 °C
36	0.027	
79	0.057	
127	0.103	
149	0.120	
186	0.152	
221	0.189	
253	0.233	
282	0.276	
305	0.323	

Cyclohexane/Poly(styrene 23%-co-butadiene)

P(Torr)	W_1	T = 23.5 °C
14.8	0.015	
22.4	0.035	
34.0	0.074	
51.2	0.141	
57.3	0.197	
67.7	0.276	
75.2	0.328	

P(Torr)	W_1	T = 60 °C
36	0.018	
79	0.052	
127	0.088	
186	0.136	
221	0.168	
253	0.208	
282	0.244	
305	0.287	

Cyclohexane/Poly(styrene 45%-co-butadiene)

P(Torr)	W_1	T = 23.5 °C
14.8	0.011	
22.4	0.028	
34.0	0.063	
51.2	0.127	
57.3	0.176	
67.7	0.253	
75.2	0.301	

P(Torr)	W_1	T = 60 °C
36	0.021	
79	0.050	
127	0.087	
149	0.103	
186	0.130	
221	0.163	
253	0.200	
282	0.240	
305	0.282	

Cyclohexane/Poly(vinyl acetate-co-ethylene)

Cyclohexane/Poly(vinyl acetate 25%-co-ethylene)

P(Torr)	W_1	T = 80 °C
56	0.011	
108	0.037	
199	0.074	
298	0.140	
412	0.228	
416	0.238	

455	0.277
481	0.300
528	0.369

Cyclohexane/Poly(vinyl acetate 50%-co-ethylene)

P(Torr)	W_1	T = 80 °C
56	0.005	
108	0.025	
199	0.046	
298	0.104	
412	0.159	
416	0.170	
455	0.205	
481	0.225	
528	0.287	

Cyclohexane/Poly(vinyl acetate 70%-co-ethylene)

P(Torr)	W_1	T = 80 °C
56	0.004	
108	0.026	
199	0.042	
298	0.081	
412	0.123	
416	0.133	
455	0.156	
481	0.191	
528	0.242	

Hexane/Polyacrylonitrile

P(Torr)	W_1	T = 60 °C
93	0.001	
188	0.007	
270	0.007	
325	0.009	

Hexane/Poly(acrylonitrile-co-butadiene)

Hexane/Poly(acrylonitrile 21%-co-butadiene)

P(Torr)	W_1	T = 60 °C
97	0.025	
192	0.044	
291	0.082	
334	0.104	
381	0.134	
431	0.170	
478	0.236	
487	0.251	

Hexane/Poly(acrylonitrile 33%-co-butadiene)

P(Torr)	W_1	T = 60 °C
93	0.002	
188	0.017	
270	0.026	
325	0.037	

Hexane/Poly(acrylonitrile 51%-co-butadiene)

P(Torr)	W_1	T = 60 °C
97	0.018	
192	0.020	
291	0.029	
334	0.033	
381	0.041	
431	0.044	
478	0.062	
487	0.062	

Hexane/cis 1,4-Polybutadiene

P(Torr)	W_1	T = 60 °C
93	0.036	
188	0.078	
270	0.115	
325	0.146	

Hexane/Poly(styrene-co-butadiene)

Hexane/Poly(styrene 23%-co-butadiene)

P(Torr)	W_1	T = 70 °C
104	0.014	
205	0.043	
289	0.063	
366	0.110	
461	0.162	
564	0.262	

Hexane/Poly(styrene 45%-co-butadiene)

P(Torr)	W_1	T = 70 °C
104	0.016	
205	0.038	
289	0.061	
366	0.103	
461	0.155	
564	0.249	

Methanol/Poly(vinyl acetate)

P(Torr)	W_1	T = 80 °C
102	0.021	
213	0.030	
299	0.041	
394	0.053	
493	0.062	
593	0.08	

Methanol/Poly(vinyl acetate 10%-co-vinyl chloride)

P(Torr)	W_1	T = 80 °C
102	0.021	
213	0.030	
299	0.041	
394	0.053	
493	0.062	
593	0.08	

Octane/Poly(acrylonitrile-co-butadiene)

Octane/Poly(acrylonitrile 21%-co-butadiene)

P(Torr)	W_1	T = 60 °C
21.4	0.036	
31.4	0.052	
38.1	0.064	
44.3	0.079	
51.8	0.111	
63.1	0.158	

Octane/Poly(acrylonitrile 51%-co-butadiene)

P(Torr)	W_1	T = 60 °C
21.4	0.007	
31.4	0.010	
38.1	0.013	
44.3	0.015	
51.8	0.021	
63.1	0.026	

Pentane/Polyacrylonitrile

P(Torr)	W_1	T = 60 °C
100	0.005	
202	0.007	
401	0.011	
485	0.010	
581	0.010	
673	0.010	
763	0.010	
868	0.011	
976	0.011	

Pentane/Poly(acrylonitrile-co-butadiene)

Pentane/Poly(acrylonitrile 21%-co-butadiene)

P(Torr)	W_1	T = 60 °C
171	0.008	
270	0.016	
351	0.021	
491	0.033	
630	0.046	
730	0.055	
850	0.070	
936	0.078	
1032	0.089	

Pentane/Poly(acrylonitrile 33%-co-butadiene)

P(Torr)	W_1	T = 60 °C
100	0.009	
202	0.014	
401	0.025	
485	0.027	
581	0.032	
673	0.036	
763	0.044	
868	0.050	
976	0.055	

Pentane/Poly(acrylonitrile 51%-co-butadiene)

P(Torr)	W_1	T = 60 °C
171	0.010	
270	0.009	
351	0.013	
491	0.019	
630	0.022	
730	0.022	
850	0.026	
936	0.027	
1032	0.034	

Pentane/cis 1,4-Polybutadiene

P(Torr)	W_1	T = 60 °C
100	0.012	
202	0.024	
401	0.046	
485	0.061	
581	0.082	
673	0.095	
763	0.117	
868	0.134	
976	0.155	

Pentane/Poly(styrene-co-butadiene)

Pentane/Poly(styrene 23%-co-butadiene)

P(Torr)	W_1	T = 60 °C
171	0.008	
270	0.016	
351	0.021	
491	0.033	
630	0.046	
730	0.055	
850	0.070	
936	0.078	
1032	0.089	

Pentane/Poly(styrene 45%-co-butadiene)

P(Torr)	W_1	T = 60 °C
171	0.010	
270	0.009	
351	0.013	
491	0.019	
630	0.022	
730	0.022	
850	0.026	
936	0.027	
1032	0.034	

Toluene/Poly(styrene-co-butadiene)

Toluene/Poly(styrene 23%-co-butadiene)

P (Torr)	W_1	T = 35 °C
7.0	0.029	
15.6	0.031	
22.8	0.032	
32.7	0.037	
36.2	0.037	
41.1	0.038	

Toluene/Poly(styrene 5%-co-butadiene)

P(Torr)	W_1	T = 35 °C
7.0	0.043	
15.6	0.099	
22.8	0.184	
32.7	0.319	
36.2	0.416	
41.1	0.513	

List of Figures

Figure 1. Experimental apparatus for vapor-liquid equilibria (VLE) measurement of polymer/solvent binary solutions. (Here VLE of two polymers with a common solvent can be measured simultaneously).

Figure 2. VLE for cyclohexane/poly(ethylene-co-vinyl acetate) solutions.

Figure 3. VLE for chloroform/polystyrene, poly(styrene-co-butyl methacrylate), and poly(butyl methacrylate) solutions.

Figure 4. VLE for cyclohexane/cis-1,4-polybutadiene, and poly(butadiene-co-acrylonitrile) solutions.

Figure 5. VLE for n-hexane/cis-1,4-polybutadiene, and poly(butadiene-co-acrylonitrile) solutions.

Figure 6. VLE for n-pentane/poly(butadiene-co-acrylonitrile) solutions.

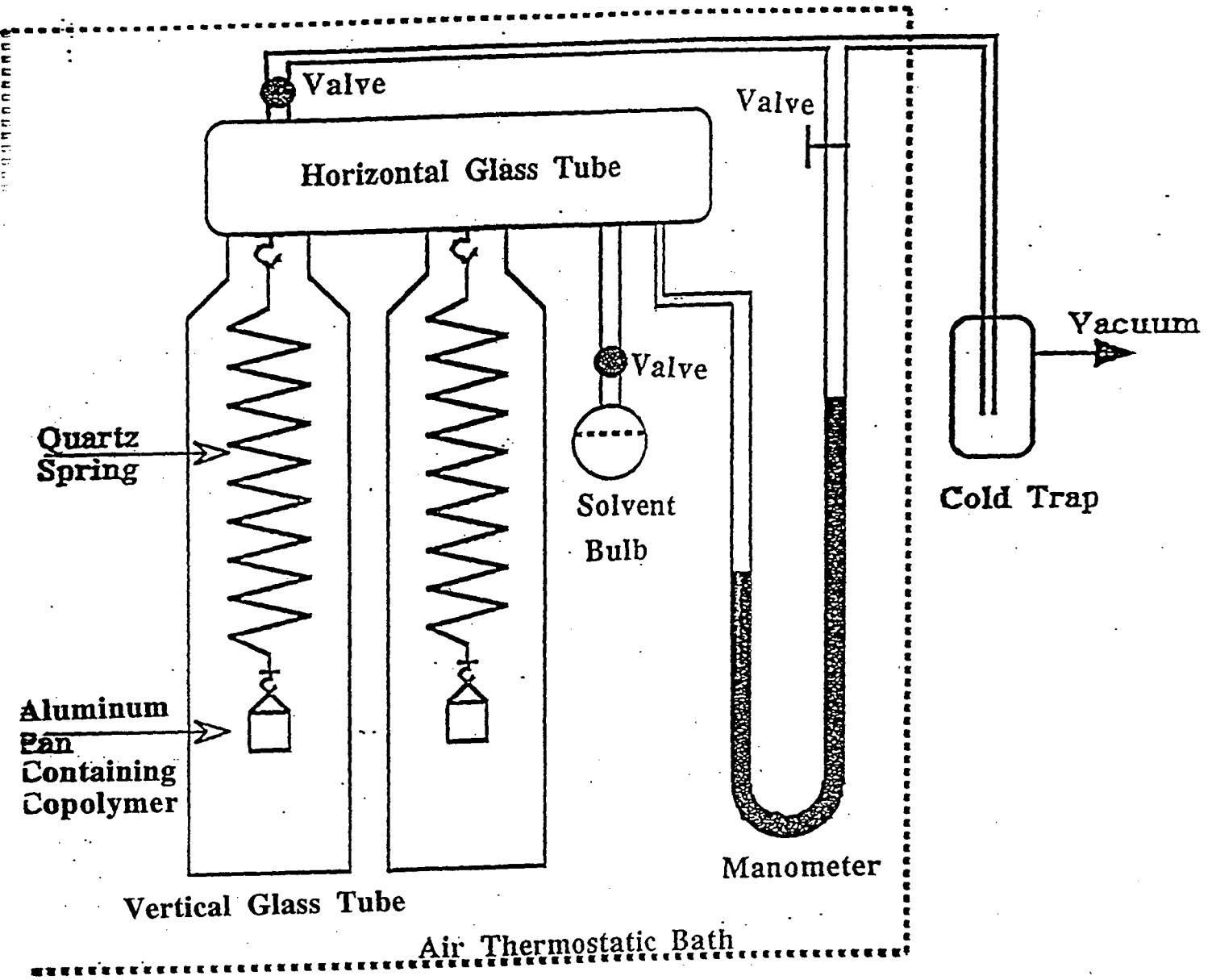
Valve
Valve
Horizontal Glass Tube
Vacuum
Valve
Quartz Spring
Solvent Bulb
Cold Trap
Aluminum Pan Containing Copolymer
Manometer
Vertical Glass Tube
Air Thermostatic Bath

#1

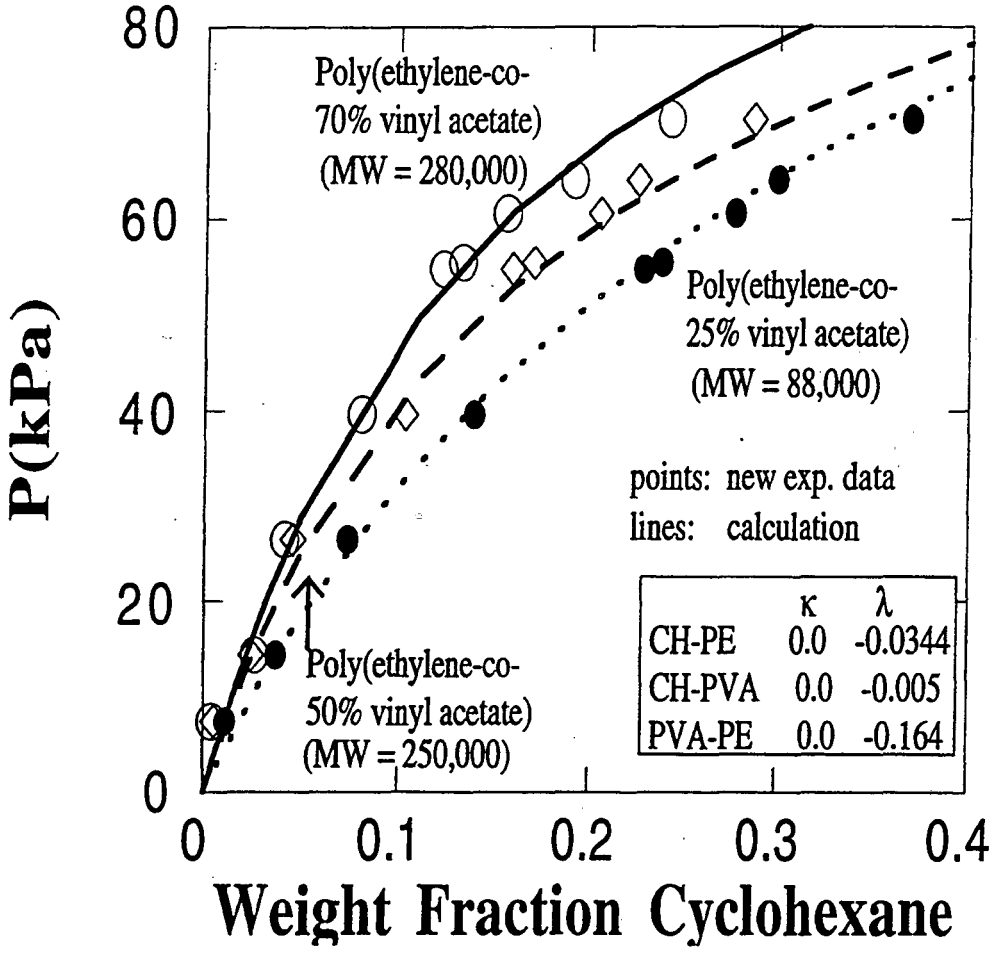
80
60
40
20
0
P(kPa)
0
0.1
0.2
0.3
0.4
Weight Fraction Cyclohexane
Poly(ethylene-co-
70% vinyl acetate)
(MW = 280,000)
Poly(ethylene-co-
25% vinyl acetate)
(MW = 88,000)
Poly(ethylene-co-
50% vinyl acetate)
(MW = 250,000)
points: new exp. data
lines: calculation
κ λ
CH-PE 0.0 -0.0344
CH-PVA 0.0 -0.005
PVA-PE 0.0 -0.164

#2

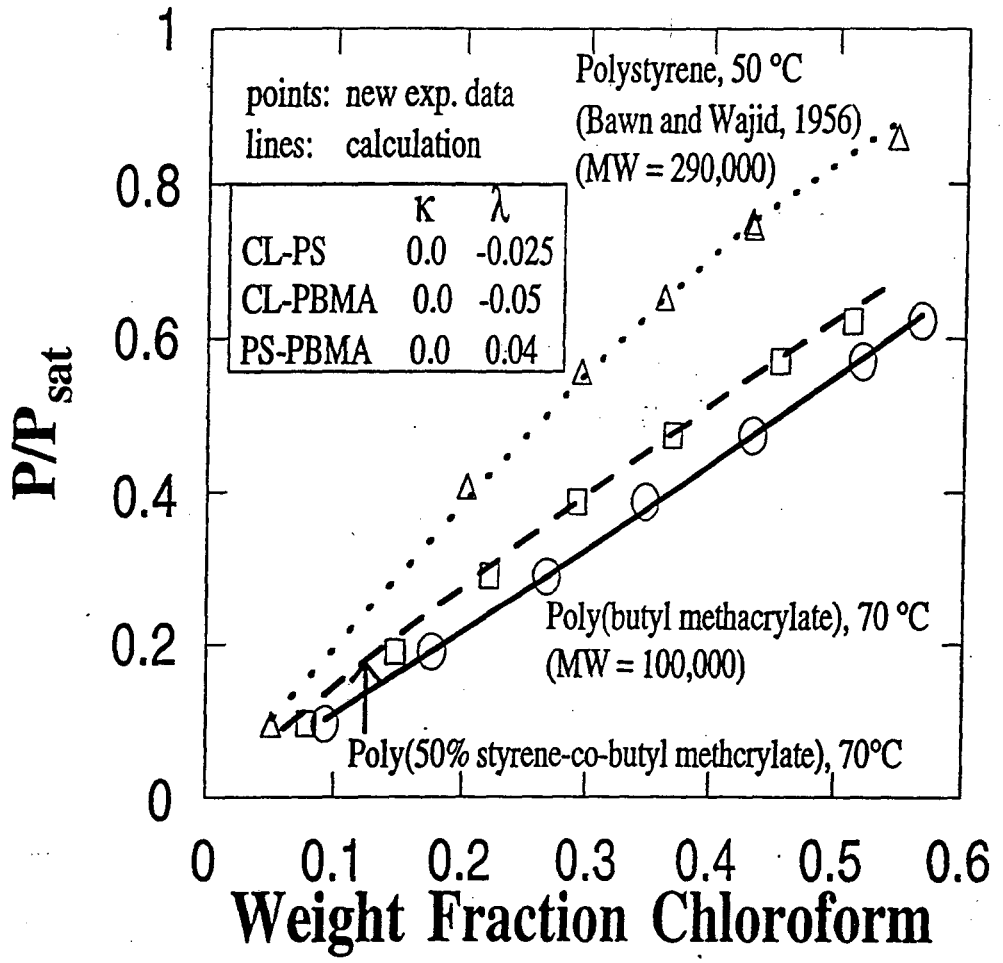
points: new exp. data
lines: calculation
κ λ
CL-PS 0.0 -0.025
CL-PBMA 0.0 -0.05
PS-PBMA 0.0 0.04
Polystyrene, 50 °C
(Bawn and Wajid, 1956)
(MW = 290,000)
Poly(butyl methacrylate), 70 °C
(MW = 100,000)
Poly(50% styrene-co-butyl methcrylate), 70°C
P/P sat
Weight Fraction Chloroform
0
0.2
0.4
0.6
0.8
1
0.1
0.3
0.5

#3

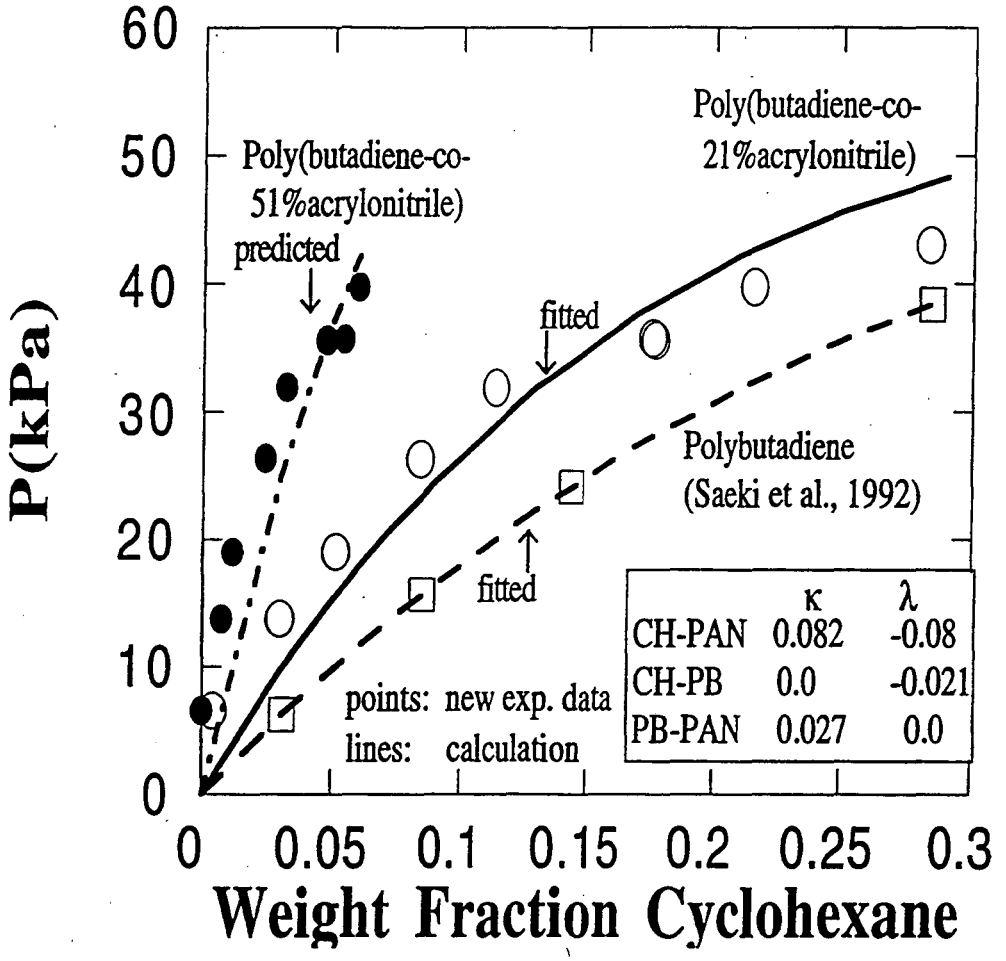
P(kPa)
Weight Fraction Cyclohexane
Poly(butadiene-co-51%acrylonitrile)
predicted
Poly(butadiene-co-21%acrylonitrile)
fitted
Polybutadiene
(Saeki et al., 1992)
fitted
points: new exp. data
lines: calculation
κ λ
CH-PAN 0.082 -0.08
CH-PB 0.0 -0.021
PB-PAN 0.027 0.0

#4

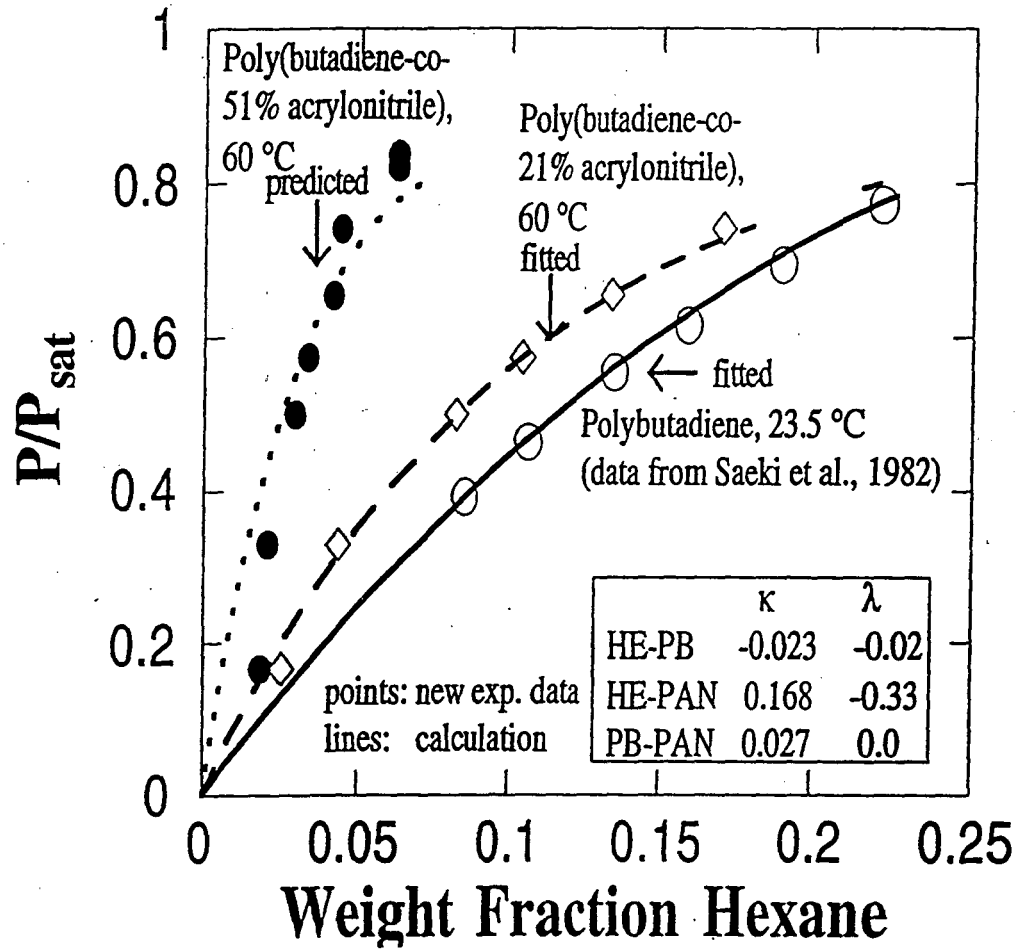
Poly(butadiene-co-
51% acrylonitrile),
60 °C
predicted
Poly(butadiene-co-
21% acrylonitrile),
60 °C
fitted
fitted
Polybutadiene, 23.5 °C
(data from Saeki et al., 1982)
points: new exp. data
lines: calculation
κ λ
HE-PB -0.023 -0.02
HE-PAN 0.168 -0.33
PB-PAN 0.027 0.0
P/P sat
Weight Fraction Hexane
0
0.2
0.4
0.6
0.8
1
0
0.05
0.1
0.15
0.2
0.25

#5

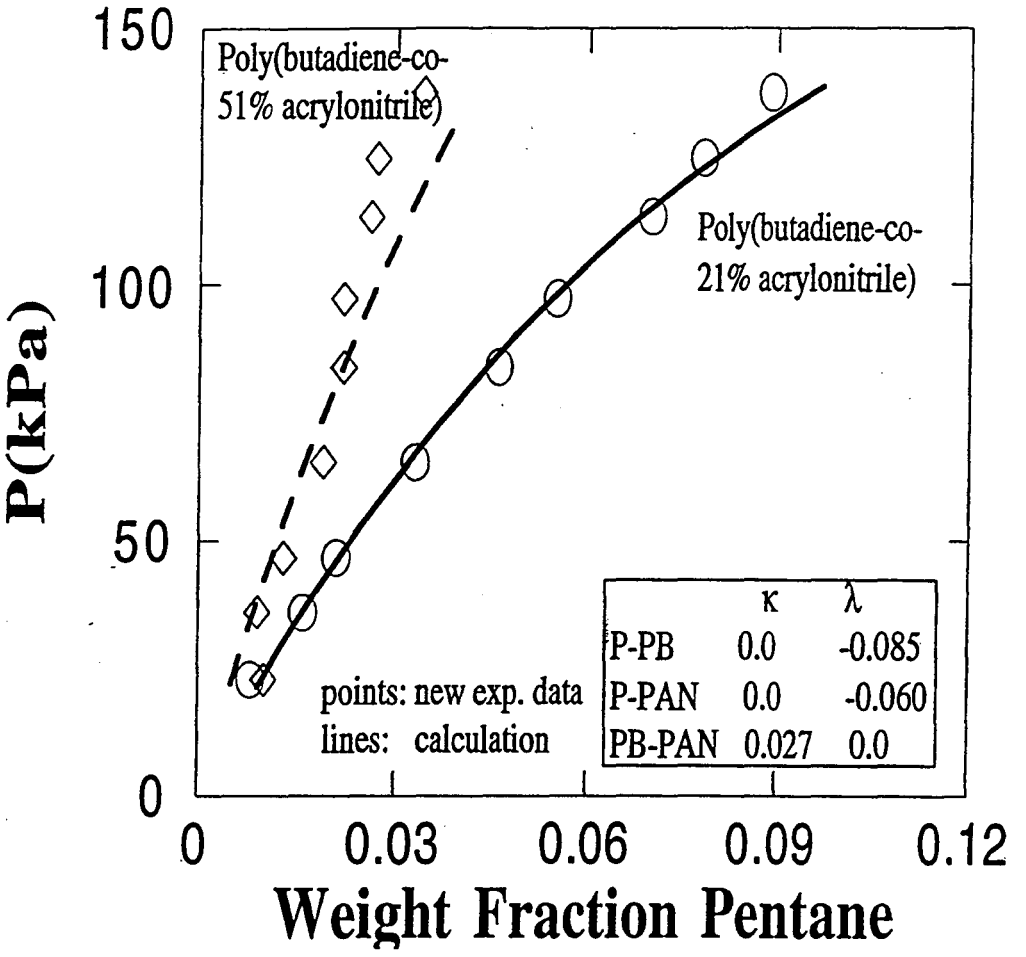
150
100
50
0
P(kPa)
0
0.03
0.06
0.09
0.12
Weight Fraction Pentane
Poly(butadiene-co-
51% acrylonitrile)
Poly(butadiene-co-
21% acrylonitrile)
points: new exp. data
lines: calculation
κ λ
P-PB 0.0 -0.085
P-PAN 0.0 -0.060
PB-PAN 0.027 0.0

#6

LAWRENCE BERKELEY LABORATORY
UNIVERSITY OF CALIFORNIA
TECHNICAL INFORMATION DEPARTMENT
BERKELEY, CALIFORNIA 94720