LBL-36849
UC-250

Lawrence Berkeley Laboratory
UNIVERSITY OF CALIFORNIA

EARTH SCIENCES DIVISION

To be presented at the World Geothermal Congress,
Florence, Italy, May 18–31, 1995, and to be published
in the Proceedings

Numerical Simulation of Water Injection into Vapor-Dominated Reservoirs

K. Pruess

U. C. Lawrence Berkeley Laboratory
Library, Berkeley

January 1995

FOR REFERENCE

Not to be taken from this room

REFERENCE COPY
Does Not
Circulate
Bldg. 50 Library.
LBL-36849
Copy 1

Prepared for the U.S. Department of Energy under Contract Number DE-AC03-76SF00098

DISCLAIMER

This document was prepared as an account of work sponsored by the United States Government. While this document is believed to contain correct information, neither the United States Government nor any agency thereof, nor the Regents of the University of California, nor any of their employees, makes any warranty, express or implied, or assumes any legal responsibility for the accuracy, completeness, or usefulness of any information, apparatus, product, or process disclosed, or represents that its use would not infringe privately owned rights. Reference herein to any specific commercial product, process, or service by its trade name, trademark, manufacturer, or otherwise, does not necessarily constitute or imply its endorsement, recommendation, or favoring by the United States Government or any agency thereof, or the Regents of the University of California. The views and opinions of authors expressed herein do not necessarily state or reflect those of the United States Government or any agency thereof or the Regents of the University of California.

LBL-36849
UC-250

Numerical Simulation of Water Injection into Vapor-Dominated Reservoirs

Karsten Pruess

Earth Sciences Division
Lawrence Berkeley Laboratory
University of California
Berkeley, California 94720

January 1995

This work was supported by the Assistant Secretary for Energy Efficiency and Renewable Energy, Geothermal Division, of the U.S. Department of Energy under Contract No. DE-AC03-76SF00098.

NUMERICAL SIMULATION OF WATER INJECTION INTO VAPOR-DOMINATED RESERVOIRS

Karsten Pruess

Earth Sciences Division, Lawrence Berkeley Laboratory
University of California, Berkeley, CA 94720

Key words: Reinjection, Geysers steam field, coupled fluid and heat flows, numerical simulation techniques.

ABSTRACT

Water injection into vapor-dominated reservoirs is a means of condensate disposal, as well as a reservoir management tool for enhancing energy recovery and reservoir life. We review different approaches to modeling the complex fluid and heat flow processes during injection into vapor-dominated systems. Vapor pressure lowering, grid orientation effects, and physical dispersion of injection plumes from reservoir heterogeneity are important considerations for a realistic modeling of injection effects. An example of detailed three-dimensional modeling of injection experiments at The Geysers is given.

1. INTRODUCTION

Extensive steam production from the vapor-dominated reservoirs at Larderello, Italy, and The Geysers, California, has caused a decline of reservoir pressures and well flow rates, and has led to an underutilization of installed electric generating capacities. These reservoirs are beginning to run out of fluid, while heat reserves in place are still enormous.

Vapor-dominated geothermal reservoirs are naturally water-short systems. Fluid reserves tend to get depleted during exploitation much more quickly than heat reserves. Injection of water is the primary means by which dwindling fluid reserves can be replenished, and field life and energy recovery be enhanced. At The Geysers, water injection has been practiced, on an increasingly large scale, since 1969. The objective initially was disposal of condensate, but more recently, injection has been viewed as a means of extending reservoir life and enhancing energy recovery. At The Geysers as well as at Larderello it has been well documented that injection has increased flow rates of nearby wells (Giovannoni et al., 1981; Bertrami et al., 1985; Enedy et al., 1991; Goyal and Box, 1992). Effects of water injection are not always beneficial, however, because thermal degradation or water breakthrough may occur at neighboring production wells (Barker et al., 1992).

From the fluid dynamics standpoint, water injection into depleted (low pressure) vapor zones is a process of immiscible displacement. This is complicated by (i) strong coupling between fluid flow and heat transfer, (ii) phase change processes (boiling and condensation), and (iii) pervasive reservoir heterogeneities, with predominant fracture and small matrix permeability. Injected water migrates primarily along fractures, partially vaporizing from heat transfered by the wall rock, partially entering the low-permeability rock matrix by capillary, gravity, and pressure force.

2. INJECTION MODELING

The design and optimization of injection operations require reliable and robust modeling techniques. From a mathematical viewpoint the equations describing the relevant two-phase fluid and heat flow processes are highly non-linear, making their solution a challenging task. Non-linearities arise from (i) order-of-magnitude changes in fluid properties between liquid and vapor (such as density, viscosity, compressibility, enthalpy), (ii) the strong dependence of saturated vapor pressure on temperature, and (iii) highly non-linear relative permeability and capillary pressure relationships. Additional complications arise from hydrodynamic instabilities, including the gravitational instability of water over steam (Pruess, 1991b), and viscous instabilities at the water-vapor interface (Fitzgerald et al., 1994).

Different conceptualizations have been used in the mathematical modeling of water injection into vapor zones. Early work generally simplified the reservoir as a homogeneous porous continuum, and focussed on one-dimensional horizontal flows (O'Sullivan and Pruess, 1980; Schroeder et al., 1982; Pruess et al., 1987). Two-dimensional flows including gravity effects and fracture-matrix interactions were modeled by Calore et al. (1986). These authors found that injection plumes tend to slump downward, and that temperature and phase fronts become very broad in fractured-porous media. In the vicinity of the injection point two-phase zones with low temperature and pressure develop, while temperatures and pressures are large in deeper and more distant regions of the plume. Steam is generated by the hotter portions of injection plumes and is consumed in cooler regions, giving rise to a very efficient heat transfer mechanism known as "heat pipe," in which liquid is flowing away from the injection point while vapor is flowing towards it (Calore et al., 1986; Pruess and Enedy, 1993). Coarse-grid studies were performed by several authors in an effort to determine reservoir-scale effects of water injection into vapor-dominated systems (Shook and Faulder, 1991; Lai and Bodvarsson, 1991).

We have developed a general-purpose geothermal reservoir simulation tool, TOUGH2 (Pruess, 1991a; see appendix). This simulator is capable of modeling most of the reservoir processes during injection, including appearance and disappearance of liquid and vapor phases, boiling and condensation, multiphase flow due to pressure, gravity, and capillary forces, vapor adsorption with vapor pressure lowering, heat conduction, and heat exchange between rocks and fluids. It is applicable to flow systems of arbitrary geometry from one to three dimensions, and has special provisions for flow in fractured-porous media. The code is available to the public through the U.S. Department of Energy's software distribution center.† TOUGH2 has recently been enhanced with a package of pre-conditioned conjugate gradient solvers, making possible the simulation of problems with 10,000 grid blocks or more on PCs (Antunez et al., 1994).

The present paper summarizes our recent efforts to model effects of water injection into depleted vapor zones, and to improve modeling capabilities for heterogeneous media. Accompanying laboratory work directed at fracture relative permeability measurements has been reported elsewhere (Persoff et al., 1991; Persoff and Pruess, 1993).

3. DESCRIPTION OF PHYSICAL PROCESSES

3.1 Vapor Pressure Lowering (VPL)

The thermodynamic properties of liquid and water are altered inside porous media by capillary forces and by adsorption of liquid on mineral phases (Edlefsen and Anderson, 1943; Calhoun et al., 1949; Hsieh and Ramey, 1981; Herkelrath et al., 1983; Pruess and O'Sullivan, 1992). Both effects cause liquid pressure P_l to be lower than vapor pressure P_v; the difference

$$P_l - P_v = P_{suc}(S_l) < 0 \qquad (1)$$

† *Energy Science and Technology Software Center, P.O. Box 1020, Oak Ridge, TN 37831.*

is a function of liquid saturation S_l and is termed the suction pressure, P_{suc}. Vapor pressure above a liquid held by capillary or adsorptive forces is reduced in comparison to saturated vapor pressure P_{sat} above the flat surface of a bulk liquid. The reduction is expressed in terms of a vapor pressure lowering factor $f = P_v/P_{sat}$, which is given by Kelvin's equation

$$f = \exp\left[\frac{M_w P_{suc}}{\rho_l R(T+273.15)}\right] \qquad (2)$$

Here, M_w is the molecular weight of water, ρ_l is liquid phase density, R is the universal gas constant, and temperature T is measured in °C. f depends chiefly on suction pressure, which in turn is primarily a function of liquid saturation, S_l. At typical vapor-dominated conditions of T = 240 °C, the suction pressures required for 1%, 10 %, and 20 % vapor pressure lowering (i.e., f equal to 0.99, 0.90, and 0.80) are, respectively, -19.4 bars, -203 bars, and -430 bars. Thus, significant reduction in vapor pressure will occur only for very strong suction pressures.

In a bulk two-phase mixture of liquid and vapor, vapor pressure depends solely on temperature, while inside porous media the dependence on liquid saturation can become very strong, and can significantly affect vapor pressure response to injection. To demonstrate the effects, we consider a fluid-depleted matrix block of T = 240 °C, with vapor at a pressure of P_v = 10 bars. At a porosity of 5 %, the block can hold approximately 40.7 kg/m^3 of water at full saturation. Suction pressure relationships for reservoir rocks at The Geysers and Larderello are not presently available. We use data obtained by Peters et al. (1984) for a sample of tightly welded tuff, designated G-4. This has a permeability of 1.9 microdarcies, comparable to unfractured rocks from vapor-dominated systems, so that the suction pressure relationships may be similar. The TOUGH2 simulator is used to determine the pressure response as water of 20 °C temperature is injected into the block in a series of incremental steps. After each injection step the water is assumed to be uniformly distributed throughout the block. Results for the dependence of vapor pressure on mass of injected water are shown in Fig. 1.

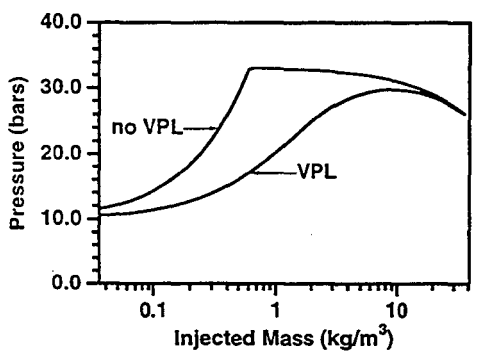

Figure 1. Vapor pressure lowering (VPL) effects in a zero-dimensional matrix block subject to water injection.

When vapor pressure lowering is neglected, the injected water is initially completely vaporized, causing vapor pressure to rise and temperature to decline. After injection of about 0.65 kg/m^3, vapor pressure reaches the saturation pressure $P_{sat}(T)$, and the block makes a transition to two-phase conditions. Subsequently vapor pressure is controlled by temperature, and both decline upon further injection. When vapor pressure lowering is taken into account, the behavior is quite different. There is less vaporization initially because some of the injected water is adsorbed. Vapor pressure increases during injection are controlled by increasing liquid saturation and weakening suction and VPL effects according to Eq. (2).

3.2 Grid Orientation Effects

Numerical simulation of injection is subject to grid orientation effects, i.e., simulation results depend not only on finite difference grid spacing but also on the orientation of the grid relative to the vertical (Pruess, 1991b). This is demonstrated by modeling injection into the system shown in Fig. 2, which represents a vertical section through a depleted vapor zone. Using "parallel" and "diagonal" grids (Fig. 3) results in dramatically different predictions for injection plumes (Fig. 4). Fig. 5 shows that more consistent (less grid-dependent) results can be obtained by using a higher order differencing method ("9-point"; Forsythe and Wasow, 1960).

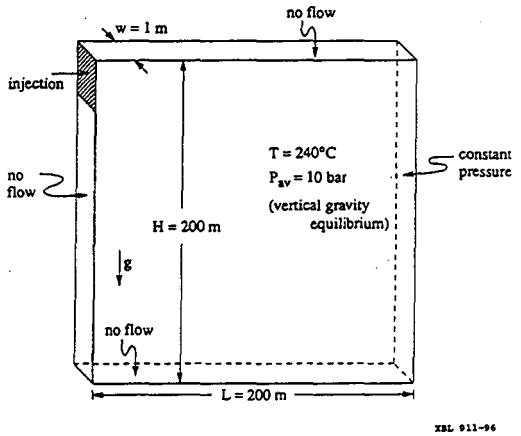

Figure 2. Vertical section model for study of grid orientation effects (from Pruess, 1991b).

The grid orientation effect arises from errors introduced by the finite difference approximation of the gravity flow term. Numerical dispersion is generally anisotropic and depends on the orientation of the computational grid relative to the vertical, as well as on the finite difference approximation used (see Table 1).

Table 1. Horizontal and vertical numerical dispersivities $C_{h,v}$ in finite difference grids of square blocks with side length h (from Pruess, 1991b).

Grid		C_h	C_v
parallel	5-point	0	h/2
	9-point	h/6	h/2
diagonal	5-point	$h/(2\sqrt{2})$	$h/(2\sqrt{2})$
	9-point	$h/(3\sqrt{2})$	$(h\sqrt{2})/3$

The strong grid orientation observed in the parallel 5-point grid arises from an interplay between gravitational instability and the extremely anisotropic numerical dispersion. For 9-point differencing, as well as for the diagonal 5-point grid, numerical dispersion is nearly isotropic, so that grid orientation effects are reduced. Note that results with less grid orientation are not necessarily "better"; they still contain numerical dispersion effects but avoid obvious inconsistencies simply because these effects are more nearly isotropic.

In order to diminish the sensitivity to space discretization effects and attain a realistic description of the behavior of injection plumes, it is necessary to explicitly represent the physical dispersion of liquid plumes from medium heterogeneities (see below).

3.3 Phase Dispersion

Water injection in fractured vapor-dominated reservoirs is dominated by gravity effects, which tend to pull the injection plume downwards. However, "straight" downward flow is only possible when appropriate permeability is available in the vertical direction. Water flowing downward in sub-vertical fractures is likely to encounter low-permeability obstacles, such as asperity contacts between fracture walls, or fracture terminations. Water will pond atop the obstacles and be diverted sideways, until other predominantly vertical pathways are reached (Fig. 6).

We have developed an approach that seeks to account for heterogeneity-derived phase dispersion by a suitable extension of conventional multiphase flow theory (Pruess, 1994). A continuum approach to phase dispersion is formulated in analogy to Fickian

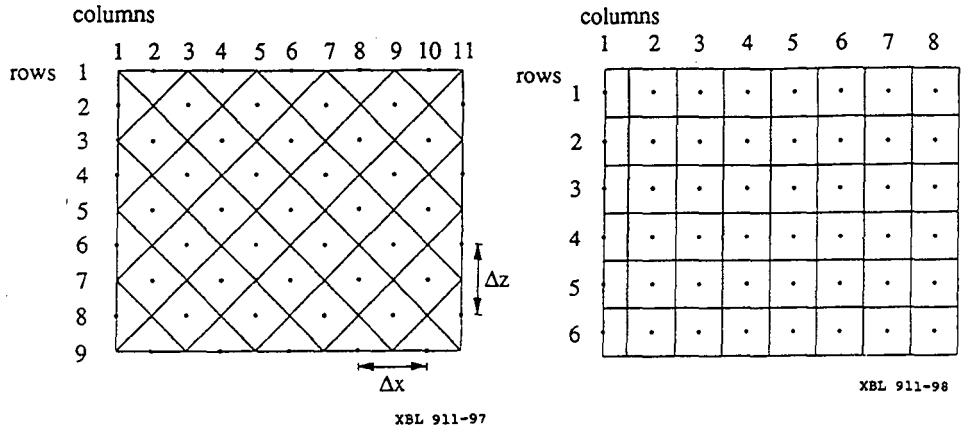

Figure 3. Schematic of "parallel" and "diagonal" grids used for modeling injection in 2-D vertical section (Pruess, 1991b).

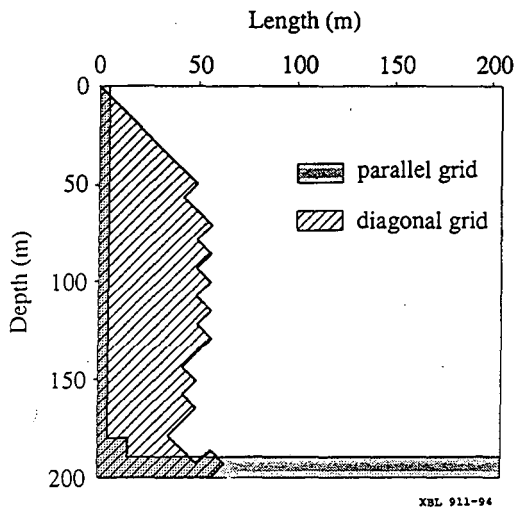

Figure 4. Simulated plumes after 717 days of injection in parallel and diagonal 5-point grids (Pruess, 1991b).

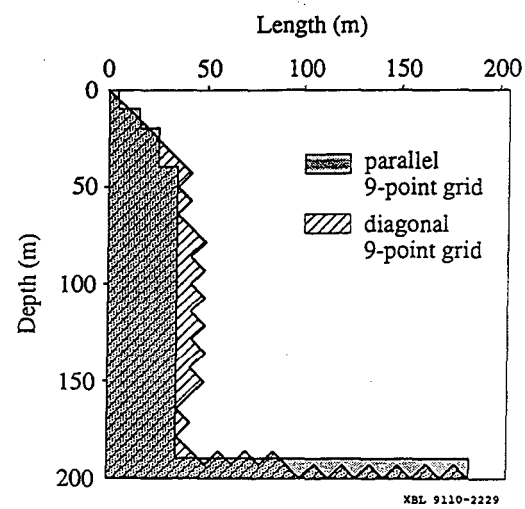

Figure 5. Simulated injection plumes after 717 days for 9-point differencing (Pruess, 1991b).

diffusion, by adding to the multiphase version of Darcy's law, Eq. (A.4), a dispersive liquid flux term written as

$$\mathbf{F}_{l,dis} = -\rho_l \, \phi \, \mathbf{D}_{dis} \, \nabla S_l \qquad (3).$$

Here, ϕ is porosity, and $\mathbf{D}$ is the dispersion tensor. Dispersive flux is presumed to be proportional to the gradient of liquid saturation, S_l. The validity of this proposed Fickian dispersion model was examined by means of high-resolution numerical simulation experiments in heterogeneous media. TOUGH2 simulations with of the order of 10,000 grid blocks showed that the mean square size of descending liquid plumes tends to grow linearly with time. This indicates that plume spreading indeed tends to be diffusive, and lends support to the flux model Eq. (3).

The proposed flux term Eq. (3) was coded into TOUGH2, and calculations were made to explore phase dispersion effects during injection. A two-dimensional radially-symmetric problem was considered (Fig. 7). An injection well penetrates the top 500 m of a 1000 m thick reservoir. Problem parameters were chosen representative of depleted vapor zones at The Geysers, with initial conditions of (T, P) = (240 °C, 10 bars). Liquid water is injected at a rate of 25 kg/s. The shape of injection plumes without and with phase dispersion is compared in Figs. 8 and 9. As expected, phase dispersion enhances the lateral and diminishes the vertical migration of injected fluid. An obvious implication is that neglect of phase-dispersive effects may underestimate the potential for water breakthrough at neighboring production wells. Reservoir pressure distributions may also be strongly affected. A more detailed discussion is given by Pruess (1994).

4. INJECTION AT THE GEYSERS

Since the mid-eighties, reservoir pressures and well production rates at The Geysers have entered a period of accelerated decline (Goyal and Box, 1990; Enedy, 1992). Steam shortfalls have curtailed power production and have emphasized the need to view injection not just as a means for condensate disposal, but as a reservoir management tool for replenishing dwindling fluid reserves and enhancing energy recovery.

In an effort to replace mass withdrawals at The Geysers, Unocal has injected condensate since 1969 (Barker et al., 1992). Beginning in 1980 this was augmented with fresh water from Big Sulphur Creek. Water injection and reinjection is now standard operating practice throughout The Geysers field. Current injection amounts to approximately 30 % of fluid withdrawals, but efforts are underway to increase injection water supplies and achieve a higher rate of fluid replenishment. Through careful decline curve analysis, Goyal and Box (1992) and Enedy et al. (1991) have been able to quantify in detail the substantial production gains from injection. However, detrimental effects from injection have also been reported in some cases, including water breakthrough at production wells (Barker et al., 1992).

Recent injection experiments performed by Northern California Power Agency (NCPA) in the Southeast Geysers have shown dramatic patterns of interference with production (Enedy et al., 1991; Pruess and Enedy, 1993). During 1990 water was injected into a well called Q-2 for periods of from one to several weeks at rates of 200-600 gpm (approximately 12-36 kg/s). A nearby

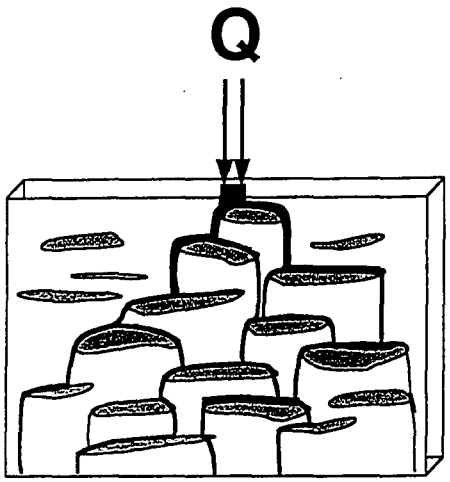

Figure 6. Schematic of liquid plume descent in a heterogeneous medium. Impermeable obstacles are shown by dark shading (from Pruess, 1994).

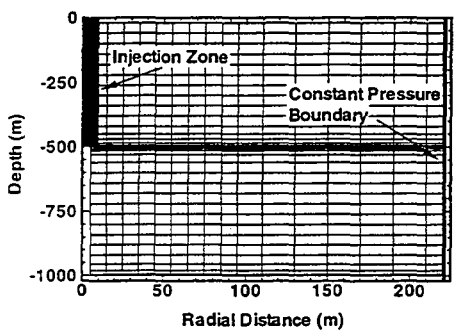

Figure 7. Gridding for 2-D R-Z injection problem (Pruess, 1994).

production well, Q-6, responded to injection with rapid strong rate declines. When injection was stopped production not only recovered but over-recovered. As shown in Fig. 10 the interference pattern could be repeated over many injection cycles, and (over-)recovery of production was stronger for longer periods of injection shut-in.

The NCPA test has yielded unique field data on injection-production interference. Replicating these effects would be a severe test for the capabilities of numerical simulation models. We have developed a model that attempts to capture in detail the reservoir conditions and processes deemed responsible for the peculiar observed behavior (Pruess and Enedy, 1993). The strength and rapidity of interference between Q-2 and Q-6 suggest that both wells intersect the same fractures or fracture zones. Accordingly, our simulation model contains a vertical fracture coupled to a large background reservoir (Fig. 11). Heat transfer from the wall rock to the fracture was included, as were effects of finite wall rock permeability. An "effective continuum" treatment was employed for the fractured-porous background reservoir. Our model involves fully three-dimensional fluid and heat flow, and simultaneously resolves processes on scales from centimeters to hundreds of meters.

Typical results of our TOUGH2 simulations are shown in Fig. 12. Prior to start of injection the production well is placed on deliverability. Production is simulated for a five-year period to obtain reasonably stabilized rates. When subsequently injection is started, production rate is seen to decline through a combination of temperature, pressure and relative permeability effects. When injection is terminated production rates not only recover but over-recover. This behavior agrees with the field observations, although no attempt was made to match them in quantitative detail.

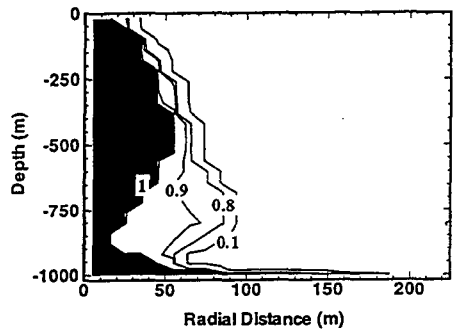

Figure 8. Injection plume (liquid saturation contours) after 692 days, no phase dispersion (Pruess, 1994).

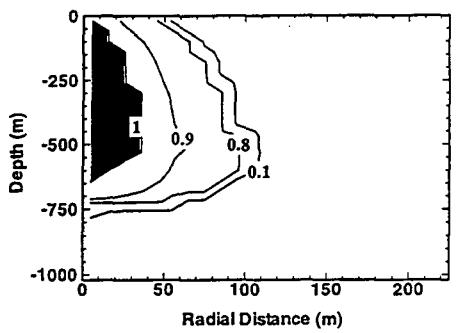

Figure 9. As Fig. 8, but transverse dispersivity of 10 m (Pruess, 1994).

The main results from this study can be summarized as follows (for a more detailed discussion see Pruess and Enedy, 1993). (i) Current numerical modeling techniques are capable of simulating the highly non-linear fluid flow and heat transfer processes during injection in considerable detail, even including the complications of flow in highly permeable fractures. (ii) The most significant reservoir processes during injection include gravity-driven downward migration of injected water, local heat exchange between the injection plume and reservoir rock, capillary imbibition of injected water into matrix rock, vapor condensation in cooler portions of the plume, and boiling in the hotter portions. (iii) Injection is subject to heat transfer limitations. Cooler portions of injection plumes consume large amounts of reservoir steam, while hotter portions contribute additional steam. (iv) From the standpoint of reservoir management, injection should not be concentrated in a few wells operating at large rates. Better pressure support is achieved by distributing injection among many wells with modest rates, well below their capacity for accepting fluids.

5. DISCUSSION AND CONCLUSIONS

After considerable uncertainty and controversy in the 1970s and 80s, the essential role of water injection in long-term management and enhanced energy recovery of vapor-dominated systems is now well recognized at The Geysers and Larderello. Optimization of water injection and avoidance of detrimental effects remain challenging tasks for the reservoir engineer. Currently available simulation techniques give a comprehensive description of the coupled fluid and heat flow processes during injection, and are capable of dealing with the complexity of "real" field problems. Recent developments attempt to better represent reservoir heterogeneities, to increase the size of problems that can be handled, and to make capabilities for treating large three-dimensional problems available on "small" computers, such as PCs (Antunez et al., 1994). These advances make numerical simulation a powerful tool for injection design.

In practical applications, the impact of water injection on nearby production wells is probably dominated by reservoir heterogeneity on a local scale. Detailed forecasting of injection effects appears feasible "in principle," but is limited in practice by our ability to actually characterize reservoir heterogeneity in sufficient detail.

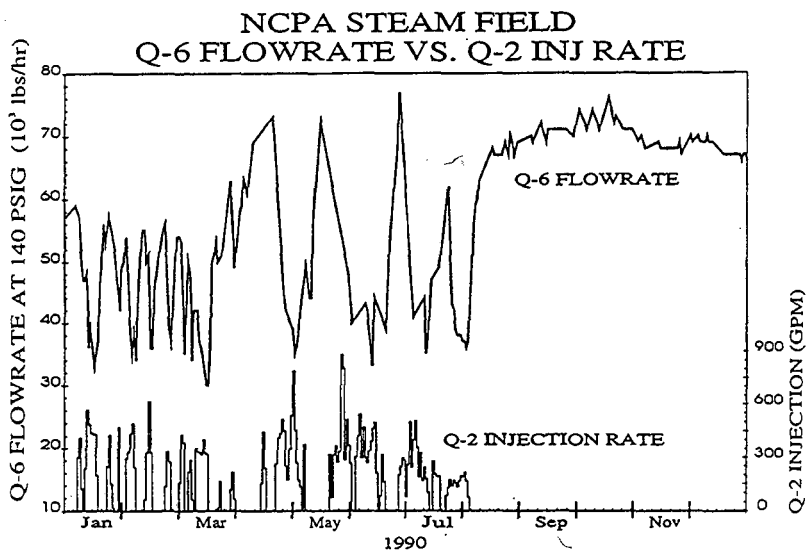

Figure 10. Injection and production data from wells Q-2 and Q-6, southeast Geysers (from Pruess and Enedy, 1993).

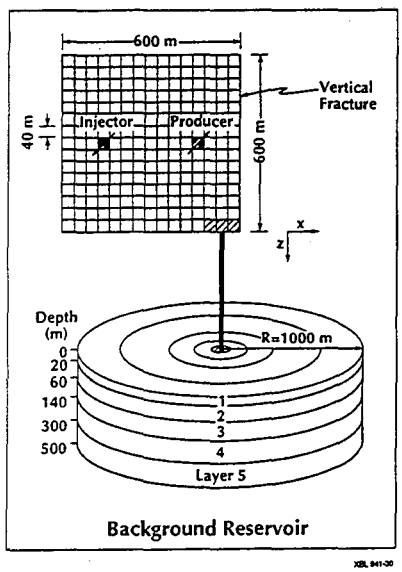

Figure 11. Schematic of fractured reservoir model used in numerical simulations (Pruess and Enedy, 1993).

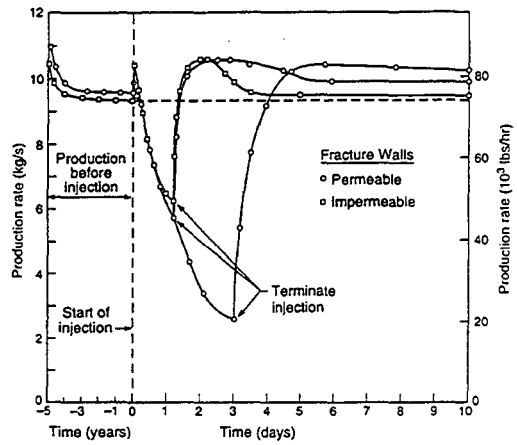

Figure 12. Simulated production before, during, and after injection (Pruess and Enedy, 1993).

Improvements may come from application of inverse techniques for automatic model calibration (Finsterle and Pruess, 1994). For field applications a trial-and-error approach may be used, in which injection response in offset producers is monitored; when undesirable interference such as thermal degradation or flow rate declines are noted, injection rates should be reduced or injection shifted to other wells. Field experiments as well as numerical simulation studies have shown that injection wells can recover quickly, and may again be used as producers within days of injection shut-in (Giovannoni et al., 1981; Pruess and Bodvarsson, 1984).

ACKNOWLEDGEMENT

The author is indebted to Drs. Emilio Antunez and Stefan Finsterle for a critical review of the manuscript and the suggestion of improvements. This work was supported by the Assistant Secretary for Energy Efficiency and Renewable Energy, Geothermal Division, of the U.S. Department of Energy under Contract No. DE-AC03-76SF00098.

REFERENCES

Antunez, A., G. Moridis and K. Pruess (1994). *Large-Scale Geothermal Reservoir Simulation on PCs*, Lawrence Berkeley Laboratory Report LBL-35192, presented at Nineteenth Workshop on Geothermal Reservoir Engineering, Stanford University, Stanford, CA, January 1994.

Barker, B.J., M.S. Gulati, M.A. Bryan, and K.L Riedel (1992). Geysers Reservoir Performance. In: *Special Report No. 17, Monograph on the Geysers Geothermal Field,* C. Stone, (ed.), Geothermal Resources Council, Davis, CA, pp. 167-177.

Bertrami, R., C. Calore, G. Cappetti, R. Celati and F. D'Amore (1985). A Three-Year Recharge Test by Reinjection in the Central Area of Larderello Field: Analysis of Production Data. In: *Proceedings, 1985 International Symposium on Geothermal Energy*, GRC Transactions 9, part II, pp. 293-298.

Calhoun, J. C. Jr., M. Lewis Jr., and R. C. Newman (1949). Experiments on the Capillary Properties of Porous Solids, *Petroleum Trans. AIME*, pp. 189-196.

Calore, C., K. Pruess, and R. Celati (1986). Modeling Studies of Cold Water Injection into Fluid-Depleted, Vapor-Dominated Geothermal Reservoirs, in: *Proceedings, 11th Workshop Geothermal Reservoir Engineering,* Stanford University, Stanford, California, pp. 161-168.

Edlefsen, N. E. and A. B. C. Anderson (1943). Thermodynamics of Soil Moisture, *Hilgardia*, 15 (2), pp. 31–298.

Enedy, K. L. (1992). The Role of Decline Curve Analysis at the Geysers. In: *Special Report No. 17, Monograph on the Geysers Geothermal Field,* C. Stone, (ed.), Geothermal Resources Council, Davis, CA, 1992, pp. 197-203.

Enedy, S., K. Enedy and J. Maney (1991). Reservoir Response to Injection in the Southeast Geysers. In: *Proceedings, Sixteenth Workshop on Geothermal Reservoir Engineering*, Stanford University, Stanford, CA, January 1991, pp. 75-82.

Finsterle, S. and K. Pruess (1994). Estimating Two-Phase Hydraulic Properties by Inverse Modeling. In: *Proceedings, Fifth International High-Level Radioactive Waste Management Conference*, Las Vegas, NV, May 1994, pp. 2160-2167.

Fitzgerald, S.D., A.W. Woods, and M. Shook (1994). *Viscous Fingers in Superheated Geothermal Systems,* presented at Nineteenth Annual Workshop on Geothermal Reservoir Engineering, Stanford University, Stanford, CA, January 1994.

Forsythe, G. E. and W. R. Wasow (1960). *Finite-Difference Methods for Partial Differential Equations*, John Wiley & Sons, Inc., New York, London.

Giovannoni, A., G. Allegrini, G. Cappetti and R. Celati (1981). First Results of a Reinjection Experiment at Larderello. In: *Proceedings, Seventh Workshop Geothermal Reservoir Engineering*, Stanford University, Stanford, CA, December 1981, pp. 77-83.

Goyal, K. P. and W. T. Box (1992). Injection Recovery Based on Production Data in Unit 13 and Unit 16 Areas of The Geysers Field. In: *Proceedings, Seventeenth Workshop on Geothermal Reservoir Engineering*, Stanford University, Stanford, CA, January 1992, pp. 103-109.

Goyal, K. P. and W. T. Box (1990). Reservoir Response to Production: Castle Rock Springs Area, East Geysers, California, U.S.A. *In: Proceedings, Fifteenth Workshop on Geothermal Reservoir Engineering*, Stanford University, Stanford, CA, January 1990, pp. 103-112.

Herkelrath, W. N., A. F. Moench and C. F. O'Neal II (1983). Laboratory Investigations of Steam Flow in a Porous Medium, *Water Resour. Res.*, 19 (4), pp. 931-937.

Hsieh, C. H. and H. J. Ramey, Jr. (1981). *Vapor Pressure Lowering in Geothermal Systems*, paper SPE-9926, presented at the 1981 Society of Petroleum Engineers California Regional Meeting, Bakersfield, CA, March 1981.

International Formulation Committee (1967). *A Formulation of the Thermodynamic Properties of Ordinary Water Substance*, IFC Secretariat, Düsseldorf, Germany.

Lai, C. H. and G. S. Bodvarsson (1991). *Numerical Studies of Cold Water Injection into Vapor-Dominated Geothernal Systems*, paper SPE-21788, presented at the Society of Petroleum Engineers Western National Meeting, Long Beach, CA, March 1991.

Narasimhan, T. N. and P. A. Witherspoon (1976). An Integrated Finite Difference Method for Analyzing Fluid Flow in Porous Media, *Water Resour. Res.*, Vol. 12 (1), pp. 57-64.

O'Sullivan, M. J. and K. Pruess (1980). Analysis of Injection Testing of Geothermal Reservoirs, In: *Transactions, Geothermal Resources Council*, 4, pp. 401-404.

Persoff, P. and K. Pruess (1993). Flow Visualization and Relative Permeability Measurements in Rough-Walled Fractures. In: *Proceedings, Fourth Annual High-Level Radioactive Waste Management International Conference*, Las Vegas, Nevada, April 1993, Vol. 2, pp. 2033-2041, American Nuclear Society, La Grange Park, Ill.

Persoff, P., K. Pruess and L. Myer (1991). Two-Phase Flow Visualization and Relative Permeability Measurement in Transparent Replicas of Rough-Walled Rock Fractures. In: *Proceedings, Sixteenth Workshop on Geothermal Reservoir Engineering*, Stanford University, Stanford, CA, January 1991, pp. 203-210.

Peters, R. R., E. A. Klavetter, I. J. Hall, S. C. Blair, P. R. Heller and G.W. Gee (1984). *Fracture and Matrix Hydrologic Characteristics of Tuffaceous Materials from Yucca Mountain, Nye County, Nevada.* Report SAND84-1471, Sandia National Laboratories, Albuquerque, NM.

Pruess, K. (1991a). TOUGH2 - *A General Purpose Numerical Simulator for Multiphase Fluid and Heat Flow* . Report No. LBL-29400, Lawrence Berkeley Laboratory, Berkeley, CA.

Pruess, K. (1991b). Grid Orientation and Capillary Pressure Effects in the Simulation of Water Injection into Depleted Vapor Zones. *Geothermics*, Vol. 20 (5/6), pp. 257-277.

Pruess, K. (1994). *Liquid-Phase Dispersion During Injection into Vapor-Dominated Reservoirs.* Lawrence Berkeley Laboratory Report LBL-35059, presented at Nineteenth Annual Workshop on Geothermal Reservoir Engineering, Stanford University, Stanford, CA, January 1994.

Pruess, K. and S. Enedy (1993). *Numerical Modeling of Injection Experiments at The Geysers.* Lawrence Berkeley Laboratory Report LBL-33423, presented at Eighteenth Workshop on Geothermal Reservoir Engineering, Stanford University, Stanford, CA, January 26-28, 1993.

Pruess, K. and M. O'Sullivan (1992). Effects of Capillarity and Vapor Adsorption in the Depletion of Vapor-Dominated Geothermal Reservoirs. In: *Proceedings, Seventeenth Workshop on Geothermal Reservoir Engineering*, Stanford University, Stanford, CA, January 1992, pp. 165-174.

Pruess, K., C. Calore, R. Celati and Y. S. Wu (1987). An Analytical Solution for Heat Transfer at a Boiling Front Moving Through a Porous Medium, *Int. J. of Heat and Mass Transfer*, Vol. 30 (12), pp. 2595-2602.

Pruess, K. and G. S. Bodvarsson (1984). Thermal Effects of Reinjection in Geothermal Reservoirs with Major Vertical Fractures. *J. Pet. Tech.*, Vol. 36 (10), pp. 1567–1578.

Schroeder, R. C., M. J. O'Sullivan, K. Pruess, R. Celati and C. Ruffilli (1982). Reinjection Studies of Vapor-Dominated Systems. *Geothermics*, 11 (2), pp. 93-120.

Shook, M. and D. D. Faulder (1991). Analysis of Reinjection Strategies for The Geysers. In: *Proceedings, Sixteenth Workshop Geothermal Reservoir Engineering*, Stanford University, Stanford, CA, January 1991, pp. 97-106.

Appendix: TOUGH2 Equations and Methods.

TOUGH2 is a general-purpose simulator for nonisothermal flows of NK fluid components distributed among NPH phases. For the case of a single fluid component (water) in two co-existing phases (liquid, vapor), the mass and energy balance equations for an arbitrary subdomain V_n bounded by the surface Γ_n can be written in the following form.

$$\frac{d}{dt}\int_{V_n} M\,dV = \int_{\Gamma_n} \mathbf{F}\bullet\mathbf{n}\,d\Gamma + \int_{V_n} q\,dV \qquad (A.1)$$

Here M is the "accumulation term", representing mass or internal energy per unit reservoir volume. **F** represents flux terms, and q sinks and sources (wells). The accumulation terms for mass (m) and heat (h) are given by, respectively,

$$M_m = \phi\left(S_l\rho_l + S_v\rho_v\right) \qquad (A.2)$$

$$M_h = \phi\left(S_l\rho_l u_l + S_v\rho_v u_v\right) + (1-\phi)\rho_R C_R T \qquad (A.3)$$

Here ϕ is porosity, S is saturation, ρ is density, u is internal energy, C is specific heat, and T is temperature. The subscripts l, v, and R denote liquid, vapor, and rock, respectively. The mass flux **F** is a sum over the fluxes in liquid and vapor phases, which are written as a multiphase version of Darcy's law, as follows ($\beta = l, v$).

$$\mathbf{F}_\beta = -\mathbf{k}\frac{k_{r\beta}}{\mu_\beta}\rho_\beta\left(\nabla P_\beta - \rho_\beta \mathbf{g}\right) \qquad (A.4)$$

k denotes the permeability tensor, k_r is relative permeability, μ is viscosity, P_β is the pressure in phase β, and **g** is acceleration of gravity. Heat flux contains conductive and convective components:

$$\mathbf{F}_h = -K\nabla T + \left(h_l \mathbf{F}_l + h_v \mathbf{F}_v\right) \qquad (A.5)$$

with K the thermal conductivity of the rock-fluid mixture, and h the specific enthalpy. Thermophysical properties of water substance are calculated, within experimental accuracy, from steam table equations given by the International Formulation Committee (IFC, 1967).

For numerical solution, the continuum equations (A.1) are discretized in space and time. Space discretization is made with the "Integral Finite Difference" method (IFD; Narasimhan and Witherspoon, 1976). This method permits irregularly shaped grid blocks in 1, 2, and 3 dimensions. It includes double porosity, dual permeability, and multiple interacting continua (MINC) formulations for fractured-porous media as special cases. For grid systems of regular blocks referred to a fixed global coordinate system, the IFD reduces to conventional finite differences. Time is discretized fully implicitly as a first-order (backward) finite difference.

Discretization results in a system of coupled non-linear algebraic equations. These are cast in residual form and solved simultaneously by means of Newton-Raphson iteration. Iteration is continued until all residuals are reduced below a user-specified convergence tolerance. The linear equations arising at each iteration step are solved either by direct matrix methods, or by means of preconditioned conjugate gradients.

LAWRENCE BERKELEY LABORATORY
UNIVERSITY OF CALIFORNIA
TECHNICAL AND ELECTRONIC
INFORMATION DEPARTMENT
BERKELEY, CALIFORNIA 94720