0 0 0 0 4 3 0 2 1 3 0

Submitted to Journal of Applied Physics

LBL-3706
Preprint c.1

RECEIVED
MAR 30 1976
DOCUMENTS SECTION

A COMPARISON OF THE MEASUREMENT OF BEAM CURRENT DENSITIES IN AN ELECTRON MICROSCOPE USING A FARADAY CUP AND SOLID STATE DETECTOR

D. G. Howitt, G. Thomas, and W. Toutolmin

February 1976

Prepared for the U. S. Energy Research and Development Administration under Contract W-7405-ENG-48

For Reference

Not to be taken from this room

LAWRENCE BERKELEY LABORATORY
UNIVERSITY OF CALIFORNIA
BERKELEY

LBL-3706
c.1

DISCLAIMER

This document was prepared as an account of work sponsored by the United States Government. While this document is believed to contain correct information, neither the United States Government nor any agency thereof, nor the Regents of the University of California, nor any of their employees, makes any warranty, express or implied, or assumes any legal responsibility for the accuracy, completeness, or usefulness of any information, apparatus, product, or process disclosed, or represents that its use would not infringe privately owned rights. Reference herein to any specific commercial product, process, or service by its trade name, trademark, manufacturer, or otherwise, does not necessarily constitute or imply its endorsement, recommendation, or favoring by the United States Government or any agency thereof, or the Regents of the University of California. The views and opinions of authors expressed herein do not necessarily state or reflect those of the United States Government or any agency thereof or the Regents of the University of California.

0 0 0 0 4 3 0 2 1 3 1

LBL-3706

A COMPARISON OF THE MEASUREMENT OF BEAM CURRENT DENSITIES IN AN ELECTRON MICROSCOPE USING A FARADAY CUP AND SOLID STATE DETECTOR

D. G. Howitt, G. Thomas and W. Toutolmin*

Department of Materials Science and Engineering, College of Engineering and *Materials and Molecular Research Division, Lawrence Berkeley Laboratory, University of California, Berkeley, California 94720

Abstract

A Faraday cup has been constructed which is capable of accurately measuring beam current densities in the image plane of an electron microscope. This device has been employed to calibrate a solid state detector typical of those often used to measure such small electron intensities. The ability of the solid state detector to distinguish single electrons was found to be a sensitive function of the incident electron intensity. Important applications of this work include investigations of radiation damage in beam sensitive materials e.g. biological specimens.

Introduction

In the study of radiation effects in materials the technique of in-situ irradiation in the electron microscope is becoming increasingly important. In general however, this technique has been limited in its quantitative application because of the inaccuracies associated with the measurement of beam current densities. With the interest in the dose rate dependence of beam sensitive materials to parameters such as electron energy (Howitt, Thomas and Glaeser, 1975) where the dependence is not necessarily large, highly reproducible measurements of beam current densities must be made.

To accurately measure the electron intensity incident upon a confined region of the object plane of an electron microscope it is necessary to sample the electron intensity at an image plane. The most convenient plane to introduce a measuring device into, is the final image plane, since here its presence need not interfere with the normal operation of the microscope and the area of interest can be easily defined.

The large magnifications of the final image plane, and hence the low current densities to be measured, is the common deterrent from using a primary Faraday cup as the measuring device. Instead either solid state detectors, which operate most efficiently at electron intensities less than 10^{-12} amperes cm^{-2}, or photographic exposure meters, which have large areas of capture but ranges limited to somewhat higher electron intensities, are usually preferred. The accuracy of such detectors, in predicting an absolute measure of the current density, is of course limited by the accuracy of the standardizing Faraday cup. In addition, the errors introduced from a magnification extrapolation, where the devices are situated at significantly different positions in

an electron microscope can be very large.

The detection of small collected currents itself represents no problem; however, at electron incidence levels such as 10^{-14} amperes cm^{-2}, the effects of leakage and current generation from insulators or external fields surrounding the collector will introduce significant errors.

The Faraday Cup

A Faraday cup has been constructed to operate in the normal camera position of an electron microscope in conjunction with a Cary electrometer. In order to reduce the effects from external fields the cup is surrounded by an annealed mu metal shield. The insulators are constructed from prefired and carefully machined alumina and to reduce current leakage to a minimum the cup is supported only at its base by these insulators where it connects directly to the electrometer. As a collector the cup is effectively infinitely deep being in the shape of a tall cylinder of depth twenty times its width which, to further reduce the collection losses due to backscattering, is constructed of graphite. Thus only primarily backscattered electrons should be lost introducing an error of less than one percent (Grubb 1970). The cup is shown schematically in Figure 1.

Following installation, the magnitude of the background current drift from the cup was less than 10^{-16} amperes, an order of magnitude greater than the background current drift from the electrometer itself. Thus using a defining aperture of 0.18 cm^2 this corresponds to an error of less than 5.6×10^{-16} amperes cm^{-2} in the determination of the beam current collected by the cup.

Calibration

The cup was used in conjunction with a lithium drifted silicon detector which was designed to record 650kV electrons. The two devices had defining apertures in the same plane and were operated simultaneously. The defining apertures were constructed such that the total electron incidence was greater at the cup than at the silicon detector. Thus the cup is used to measure a proportionally higher current while the detector was capable of operating in its most efficient range. The current density readings from the cup and detector were compared using 650kV and 350kV electrons over the range from 10^{-10} amperes cm^{-2} to 10^{-13} amperes cm^{-2}.

The characteristic pulse height spectra, or plots of the energy distribution of the counts from the silicon detector are shown in Figure 2. These data are obtained by scanning the amplified signal from the detector with a narrow energy window. The amplification of this signal is linear and hence the energy distribution of these counts is related by a multiplicative constant to the actual energy distribution of the original pulses from the detector. The low energy peak of the pulse height spectrum is primarily due to noise, containing a contribution from x-rays, whilst the primary peak is due to electrons. Coincidence counting effects will introduce additional high energy peaks into the pulse height spectrum since this type of detector will display an energy pulse characteristic of the total sum of the energies from these indistinguishable electrons. The effects from coincidence counting were significant at electron intensities greater than 10^{-12} amperes cm^{-2}.

To distinguish the electron counts from the noise, an energy window was introduced around the primary peak with its lower threshold at the minimum between the first two peaks.

Since the coincident counting of electrons introduces additional high energy peaks into the pulse height spectrum the positioning of the high energy side of the window will directly affect the absolute value of the electron counts and hence the measured electron incidence. To obtain the results given here the primary peak was isolated and the coincidence counts, when more than one electron contributed to a pulse from the detector, did not contribute to the value of the measured electron incidence. The efficiency of the lithium-drifted silicon detector as a function of dose was established for 650kV and 350kV electrons at room temperature; the results are displayed in Fig. 3.

The degree to which coincidence counting occurs for a specific electron incidence is clearly very reproducible (Fig. 3). It is only at the low levels of electron intensity, when the random variations ($\sqrt{N}$) in the total number of electrons seen by the detector (N) become significant, that this reproducibility in the value of the measured electron incidence is lost. It is noteworthy that the effects of coincidence counting are apparent even at very low counting rates. It is also apparent from the results at 650kV that the solid state detector has, over the lowest range of electron incidence, an efficiency greater than unity. This additional signal from the silicon detector is thought to arise from high energy background x-rays which the Faraday cup does not detect.

Discussion

The collection efficiency of the lithium drifted silicon detector is clearly very dependent upon the ability of the detector and the amplification system to resolve individual electrons. It has been

found that at the levels of illumination where this resolution can be achieved, the statistical variation in the signal become significant. The reproducible nature of the results obtained at higher current densities when this resolution is not achieved, indicates that it might be advantageous to employ these detectors at such high current densities and employ a large correcting factor.

In addition to the contribution from the random noise associated with low electron intensities any additional background signal will become proportionally more significant as the incident intensity is reduced. In the 650kV Hitachi microscope used in this study, a background contribution from both x-rays and stray electrons was encountered in the final image plane. The stray electrons are thought to arise from the misalignment of lens apertures and/or from backscattering from the walls of the microscope column. In the silicon detector the x-radiation and low energy electron backgrounds can be filtered out to some extent. However, the contribution from any high energy electrons not initiated from the defined area of interest in the object plane will contribute to the signal. An estimation of the magnitude of this effect can be made by comparing, for a constant intensity to the specimen, the values of the beam current measured at particular magnifications. Such measurements made with the Faraday cup in the 650kV Hitachi indicate that the level of electron background, although not constant, maintains a value less than 10^{-13} amperes cm^{-2} at the final screen when a 50μm second condenser aperture is used.

Acknowledgements

This work was supported by the U.S. Energy Research and Development Administration and the National Institute of Health.

0 0 0 0 4 3 0 2 1 3 5

References

1. D. G. Howitt, G. Thomas and R. M. Glaeser, Proc. 33rd Ann. Electron Microscopy Society of America Meeting (1975), Claitors Publishers, 246.

2. D. T. Grubb, J. Sci. Inst. 4, 222 (1970).

Figure Captions

Fig. 1. a) The Faraday cup. The scale is indicated.

b) The location of the Faraday cup in the Berkeley 650kV electron microscope. (Schematic).

Fig. 2. The pulse height spectra or energy distributions of signal from the lithium drifted silicon detector at 350kV and 650kV. The measurements were made by scanning the total energy range of the analyser window at 0.20 volt intervals.

Fig. 3. The relation between the efficiency of the lithium drifted silicon detector and the electron incidence measured by it. The conversion from electron density at the detector to the detectors actual count rate is for the defining aperture used (0.0368 cms diameter).

0 0 0 0 4 3 0 2 1 3 9

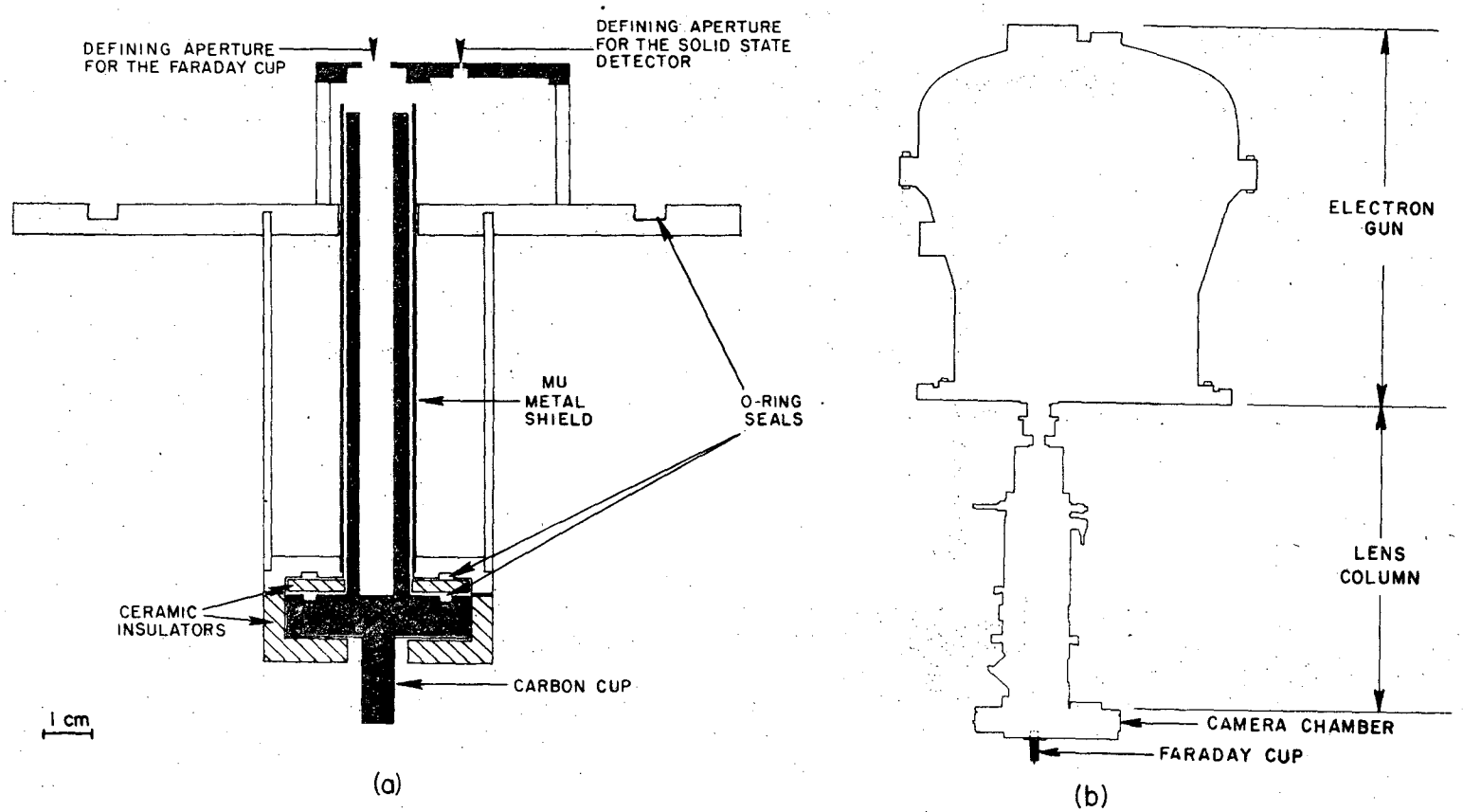

XBL 763-652

Fig. 1

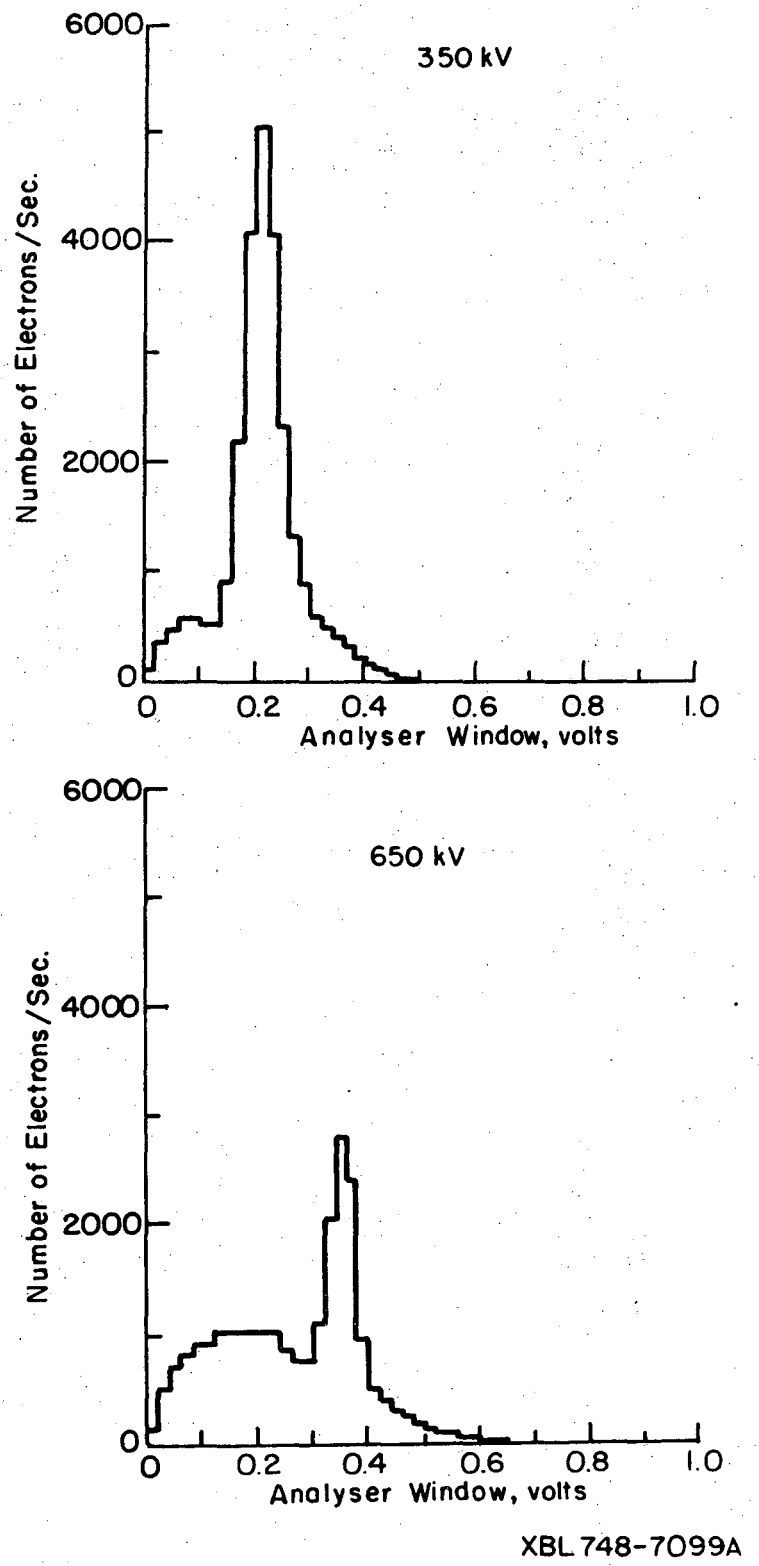
6000
4000
2000
0
350 kV
Number of Electrons/Sec.
0
0.2
0.4
0.6
0.8
1.0
Analyser Window, volts
6000
4000
2000
0
650 kV
Number of Electrons/Sec.
0
0.2
0.4
0.6
0.8
1.0
Analyser Window, volts
XBL 748-7099A

Fig. 2

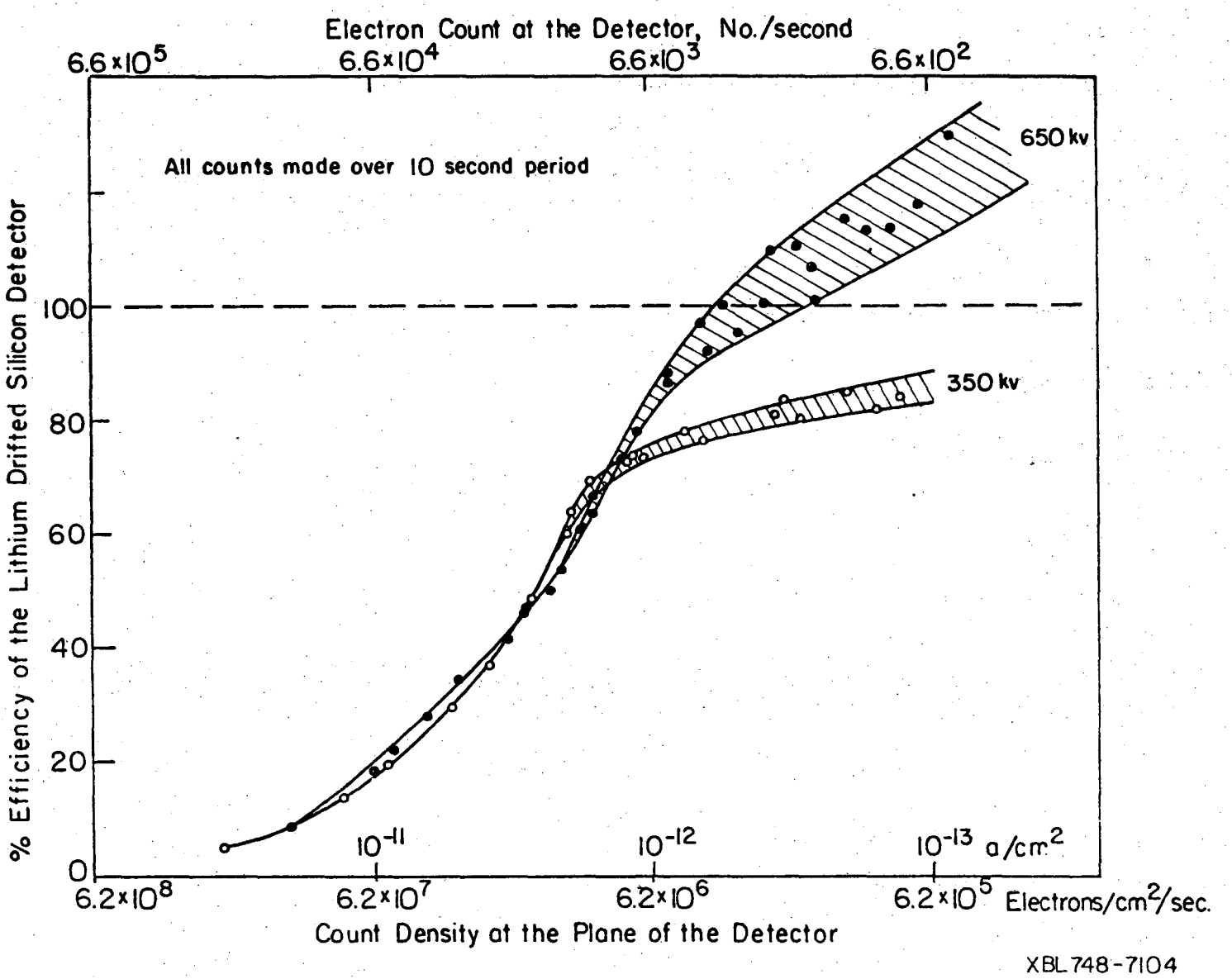

Fig. 3

0 0 0 0 4 3 0 2 1 3 7

0 0 0 0 4 3 0 2 1 3 8

LEGAL NOTICE

This report was prepared as an account of work sponsored by the United States Government. Neither the United States nor the United States Energy Research and Development Administration, nor any of their employees, nor any of their contractors, subcontractors, or their employees, makes any warranty, express or implied, or assumes any legal liability or responsibility for the accuracy, completeness or usefulness of any information, apparatus, product or process disclosed, or represents that its use would not infringe privately owned rights.

TECHNICAL INFORMATION DIVISION
LAWRENCE BERKELEY LABORATORY
UNIVERSITY OF CALIFORNIA
BERKELEY, CALIFORNIA 94720