0 0 0 0 4 3 0 2 6 4 3

Submitted to Metallurgical Transactions

LBL-3735
Preprint c. 1

EFFECT OF SOLUTE ATOMS ON THE MOTION OF A LOW ANGLE TILT BOUNDARY

C. K. Syn, A. Ahmadieh, and J. W. Morris, Jr.

RECEIVED
LAWRENCE
RADIATION LABORATORY

MAR 13 1975

LIBRARY AND
DOCUMENTS SECTION

February 1975

Prepared for the U. S. Atomic Energy Commission
under Contract W-7405-ENG-48

For Reference

Not to be taken from this room

LAWRENCE BERKELEY LABORATORY
UNIVERSITY OF CALIFORNIA
BERKELEY

LBL-3735
c. 1

DISCLAIMER

This document was prepared as an account of work sponsored by the United States Government. While this document is believed to contain correct information, neither the United States Government nor any agency thereof, nor the Regents of the University of California, nor any of their employees, makes any warranty, express or implied, or assumes any legal responsibility for the accuracy, completeness, or usefulness of any information, apparatus, product, or process disclosed, or represents that its use would not infringe privately owned rights. Reference herein to any specific commercial product, process, or service by its trade name, trademark, manufacturer, or otherwise, does not necessarily constitute or imply its endorsement, recommendation, or favoring by the United States Government or any agency thereof, or the Regents of the University of California. The views and opinions of authors expressed herein do not necessarily state or reflect those of the United States Government or any agency thereof or the Regents of the University of California.

0 0 0 0 4 3 0 2 6 4 4

LBL-3735

EFFECT OF SOLUTE ATOMS ON THE MOTION OF A LOW ANGLE TILT BOUNDARY

by

C. K. Syn, A. Ahmadieh,* and J. W. Morris, Jr.

Department of Materials Science and Engineering, University of California and Inorganic Materials Research Division, Lawrence Berkeley Laboratory; Berkeley, California 94720.

ABSTRACT

The motion of low angle tilt boundary has been studied using zinc crystals of high purity with and without controlled amounts of silver as solute. Impurity and solute atoms segregated at the original location of the boundary seems to recapture the boundary at liquid nitrogen temperature but such segregation will have disappeared when the boundary return at room temperature. Discontinuous motion of the boundary at room temperature is attributed to the diffusion of impurity and solute to the boundary dislocations.

*On leave from Pahlavi University, Shiraz, Iran. Presently visiting Professor, Department of Mechanical Engineering, University of California, Davis.

0 0 0 0 4 3 0 2 6 4 5

INTRODUCTION

The possibility that a small-angle boundary might consist of an array of dislocations and move under the action of a suitable shear stress was first suggested by Burgers[1] and later developed by Schockley and Read.[2] Experimental confirmation of this concept was first obtained by Washburn and Parker[3] and then followed by several other investigators[4,5,6] for low angle tilt boundaries in zinc crystals. The experiments were based on the application of a proper shear stress acting in the direction of the Burgers vector of the edge dislocations comprising the boundary. The motion of such boundaries has since been confirmed through metallographic[7] and electron microscopy[8] studies.

Bainbridge, et al.[5] have shown that in zinc crystals of 99.99 wt% purity, the low angle tilt boundary motion is steady and requires an increasing amount of stress to advance at liquid nitrogen temperature. At room temperature the motion was discontinuous and during each jump the boundary moved very rapidly through an appreciable volume of material. However, Vreeland[6] observed a smooth, continuous motion in crystals of higher purity (99.999 wt%) and zone-refined zinc.

We were interested in clarifying the observation of these earlier workers. In addition to high purity crystals, we used crystals containing controlled amounts of silver as an alloying element, and added an aging treatment to our annealing process of the crystals.

EXPERIMENTAL

Single crystals of high purity zinc (99.999+ wt%) and alloys containing 0.05, 0.10 and 0.21 wt% silver were grown in a graphite mold under helium atmosphere by a modified Bridgman technique at a rate of 0.4 cm/hr. The crystals were rectangular 1.3 cm × 0.7 cm and 8 cm long and were oriented in the direction $[11\bar{2}0]$ with their basal planes parallel to the wider faces. The side faces were parallel to the prismatic planes. In the case of alloy crystals, a reservoir was designed in the upper portion of the mold[9] to reduce the concentration gradient along the 8 cm length to about ±3%. The top parts were removed by spark cutting and the samples were cut to 2.5 cm length by an acid sawing technique. Then the following sequence of preparation and annealing under He atmosphere was applied: i) 1-hr. anneal at 400°C and furnace cool; ii) side surfaces were acid polished; iii) cleaved along the basal plane to reveal the natural surface of this plane; iv) 1-hr. anneal at 400°C and furnace cool; v) ∿2° angle tilt boundary (Fig. 1) introduced by bending at room temperature; vi) 1-hr. anneal at 400°C and furnace cooled to 200°C; vii) 48-hr. aging at 200°C followed by air quench and then stored in liquid nitrogen for testing. The cleaved specimens were 2.5 cm long, ∿0.8 cm wide and 0.2 to 0.4 cm thick. The width and thickness could not be controlled very closely due to the difficulty of cleaving and acid polishing.

The observation of the boundary motion was performed by using essentially the same technique and stressing apparatus as used by Bainbridge, et al.[5] The displacements of the boundary were measured by reading the distances moved by the boundary line on the basal plane

of the crystal surface. The boundary in each crystal was allowed to move by a certain distance and then moved backward until it just passed the original position by changing the direction of the external stress. This reversal was repeated once or twice. The motion of the boundary was followed on both sides of the crystal. In carefully prepared specimens the boundary seemed to move as a relatively flat interface, though occasional bowings were notices.

RESULTS

Most of the earlier observations[4,5] were reproduced and some new results were obtained. Representative data at room and liquid nitrogen temperatures are shown in Figs. 2(a) and 2(b), respectively. The stress for the motion in the reverse direction is plotted below the horizontal axis and the data on the left side of the vertical axis of the coordinates show the motion past the original position. Solid lines show the behavior of pure and dashed lines those of alloy crystals containing 0.21 wt% silver.

The following interesting points are revealed by the data shown in Fig. 2. i) The initial movement is a rapid and long-distance jump in all four cases. Such initial jumps were also recorded by Li, et al.[4] ii) The boundary motion in the reverse direction becomes smooth and continues in the pure crystals at both temperatures but the alloy crystals show this behavior at liquid nitrogen temperature only. The reversed motion in the alloy crystals is discontinuous at room temperature. In any case, it requires a gradual or discontinuous increase in stress to continue the motion. This finding confirms the room temperature results by Vreeland[6] and the liquid nitrogen temperature behavior

reported by Bainbridge, et al.[5] but is in disagreement with the latter's results at room temperature. iii) The boundary apparently remembers its original position in both pure and alloy crystals at liquid nitrogen temperatures and becomes immobilized when it returns to this position. Further movement starts with a jumping motion at a discontinuously increased stress level. However the motion at room temperature is different and the original position does not impose on increased stress. This phenomenon was not observed in the earlier works. iv) The stress level on the reversal of the motion is initially sharply reduced when compared with the level before the reversal. This phenomenon which is similar to Bauschinger effect[10] was also observed in the earlier reports.[4,5] v) The stress levels for the initial jump are higher in alloy crystals than in pure crystals but a quantitative trend could not be established as a function of solute content due to the wide scatter in the data. In addition to these observations, a gradual decrease in the boundary angle was noticed in all crystals during the movement at both 77° and 300°K as reported by Bainbridge, et al.[5]

DISCUSSION

The initial jump seems to be a breakaway motion of the boundary from impurities and solute atoms which have segregated to the boundary and have pinned the dislocations there during the prolonged annealing at 200°C.

The mobility of vacancies is strongly suppressed at liquid nitrogen temperature. Thus the impurity and solute atoms cannot move to the boundary dislocations during its return trip and only exert a frictional resistance to the boundary motion. But when the boundary returns to its

original position, it will be recaptured by the same impurity and solute atmosphere which is responsible for the initial breakaway, thus causing a breakaway jump with a discontinuous increase in stress as shown in Fig. 2(a). In pure crystals the stress increase in such an event is much smaller than in alloy crystals.

At room temperature (Fig. 2(b)) the situation is somewhat different. Immediately after the initial breakaway, the impurity and solute atoms will diffuse away with the aid of the excess vacancies preserved when the crystal was quenched from 200°C. Thus when the boundary returns to its original position, the initial segregation of impurity and solute atoms has been eliminated and the boundary behavior in this region is simply a continuation of the earlier mode of movement.

The discontinuous motion in the alloy crystals at room temperature seems to be due to the diffusion of solute atoms to the dislocations in the boundary. The diffusion is enhanced by the stress field of the dislocations,[11] initially quenched in vacancies, and the inter-dislocation vacancy flow as a consequence of the decrease in the boundary angle. Mechanisms of such decreases have been discussed by Bainbridge, et al.[5] and will not be repeated here. But the decrease is an obvious result of the loss of dislocations from the boundary. When a dislocation is removed from the boundary, the boundary becomes unstable and a rather strong force for climb[12] will be acted on its two adjacent dislocations in the boundary. Initially these two dislocations and eventually all the dislocations in the boundary will tend to rearrange themselves to a new equilibrium by either climbing up or down. The vacancies emitted by the down-climbing dislocations will be absorbed by

the up-climbing ones through the shortest path along the boundary. The silver solute atoms, which are much less mobile than the vacancies, will take advantage of such a vacancy flow and diffuse to the dislocations creating a situation similar to "strain aging."[13]

In pure crystals there will not be enough impurity atoms to cause such an effect. This will explain the contradicting room temperature behaviors in pure crystals as mentioned earlier. The jerky motion reported by Bainbridge, et al.[5] seems to be due to the higher impurity content of $\sim$100 ppm compared with that of <10 ppm in the present and Vreeland's studies.

A detailed discussion in the Bauschinger effect is beyond the scope of this report. But any mechanism ascertaining such effect should be able to explain the behavior of the low angle tilt boundary motion.

0 0 0 0 4 3 0 2 6 4 8

ACKNOWLEDGEMENT

This work was supported by the U.S. Energy Research and Development Administration through the Inorganic Materials Research Division of the Lawrence Berkeley Laboratory.

REFERENCES

1. J. M. Burgers, Proc. Phys. Soc., London, 1940, Vol. 52, p. 23.
2. W. Shockley and W. T. Read, Phys. Rev., 1949, Vol. 75, p. 692.
3. J. Washburn and E. R. Parker, Trans. AIME, 1952, Vol. 194, p. 1076.
4. C. H. Li, E. H. Edwards, J. Washburn, and E. R. Parker, Acta Met., 1953, Vol. 1, p. 223.
5. D. W. Bainbridge, C. H. Li, and E. H. Edwards, Acta Met., 1954, Vol. 2, p. 322.
6. T. Vreeland, Jr., Acta Met., 1961, Vol. 9, p. 112.
7. I. S. Servi and N. F. Granes, Trans. AIME, 1958, Vol. 212, p. 315.
8. A. Berghezan, A. Fourdeux, and S. Amelincki, Acta Met., 1961, Vol. 9, p. 464.
9. A. Ahmadieh, J. Mitchell, and J. E. Dorn, Trans. AIME, 1965, Vol. 233, p. 1130.
10. See A. Abel and H. Muir, Phil. Mag., 1972, Vol. 26, p. 489.
11. F. S. Ham, J. Appl. Phys., 1959, Vol. 30, p. 915.
12. J. P. Hirth and J. Lothe, Theory of Dislocations, p. 701, McGraw-Hill, New York, 1968.
13. See E. O. Hall, Yield Point Phenomena in Metals and Alloys, p. 50, Plenum Press, 1970.

0 0 0 0 4 3 0 2 6 4 9

FIGURE CAPTIONS

Fig. 1. Geometry of low angle tilt boundary in a hexagonal crystal.

Fig. 2. Shear stress vs. displacement in pure (solid line) and alloy (dashed line) crystals at a) liquid nitrogen and b) room temperature.

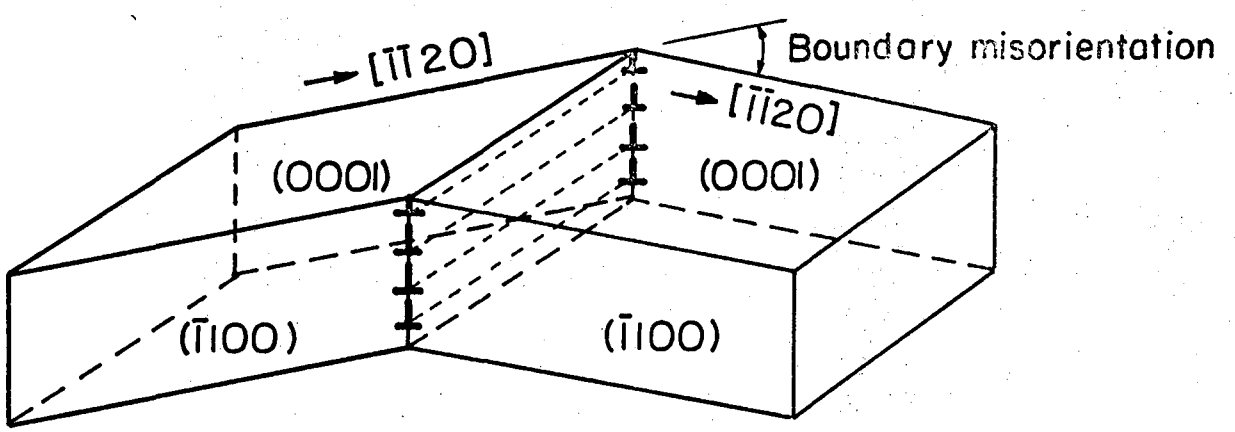

XBL 751-5562

Fig. 1.

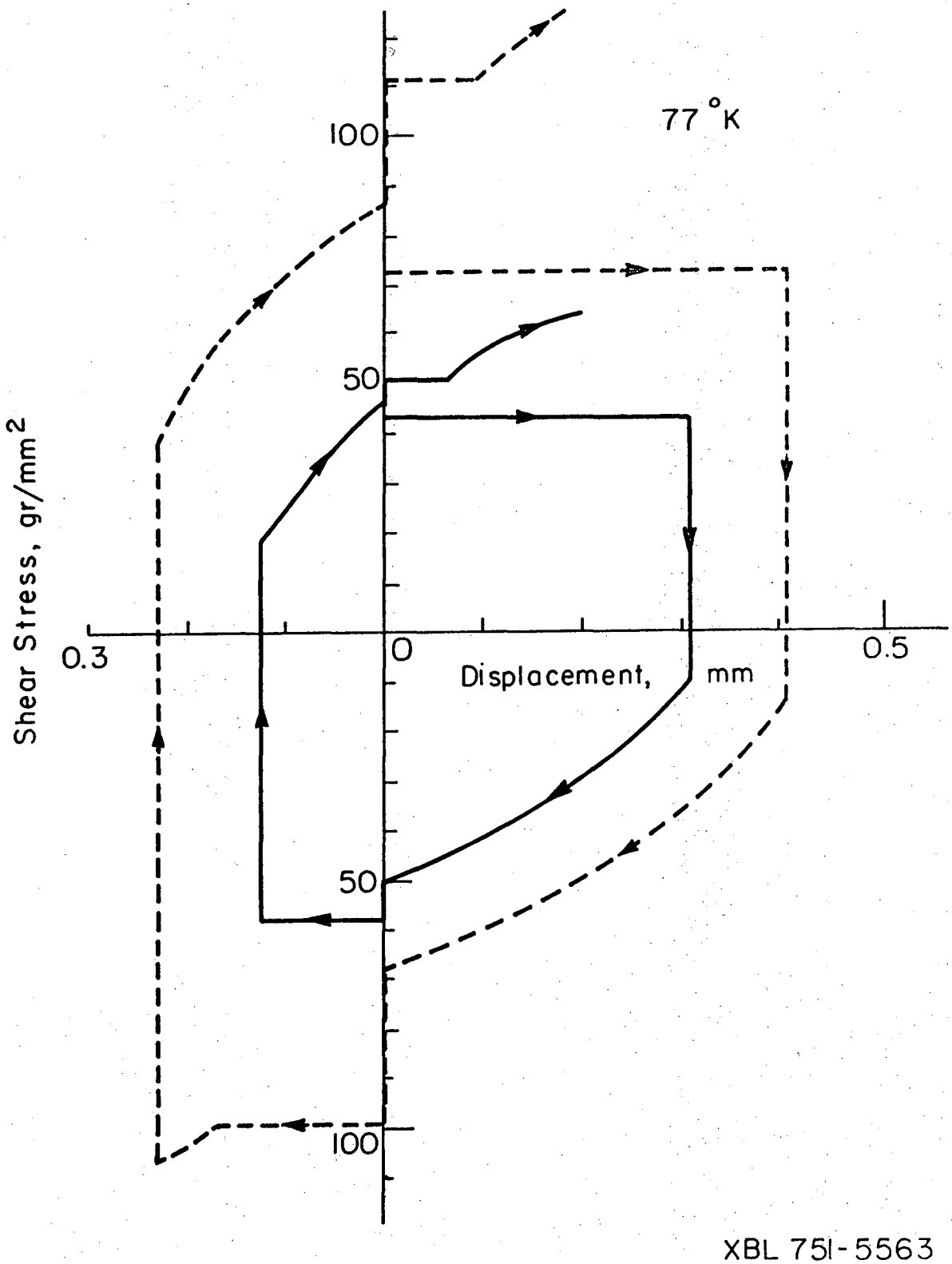
77 °K
100
50
50
100
Shear Stress, gr/mm²
0.3
0
0.5
Displacement, mm
XBL 751-5563

Fig. 2(a)

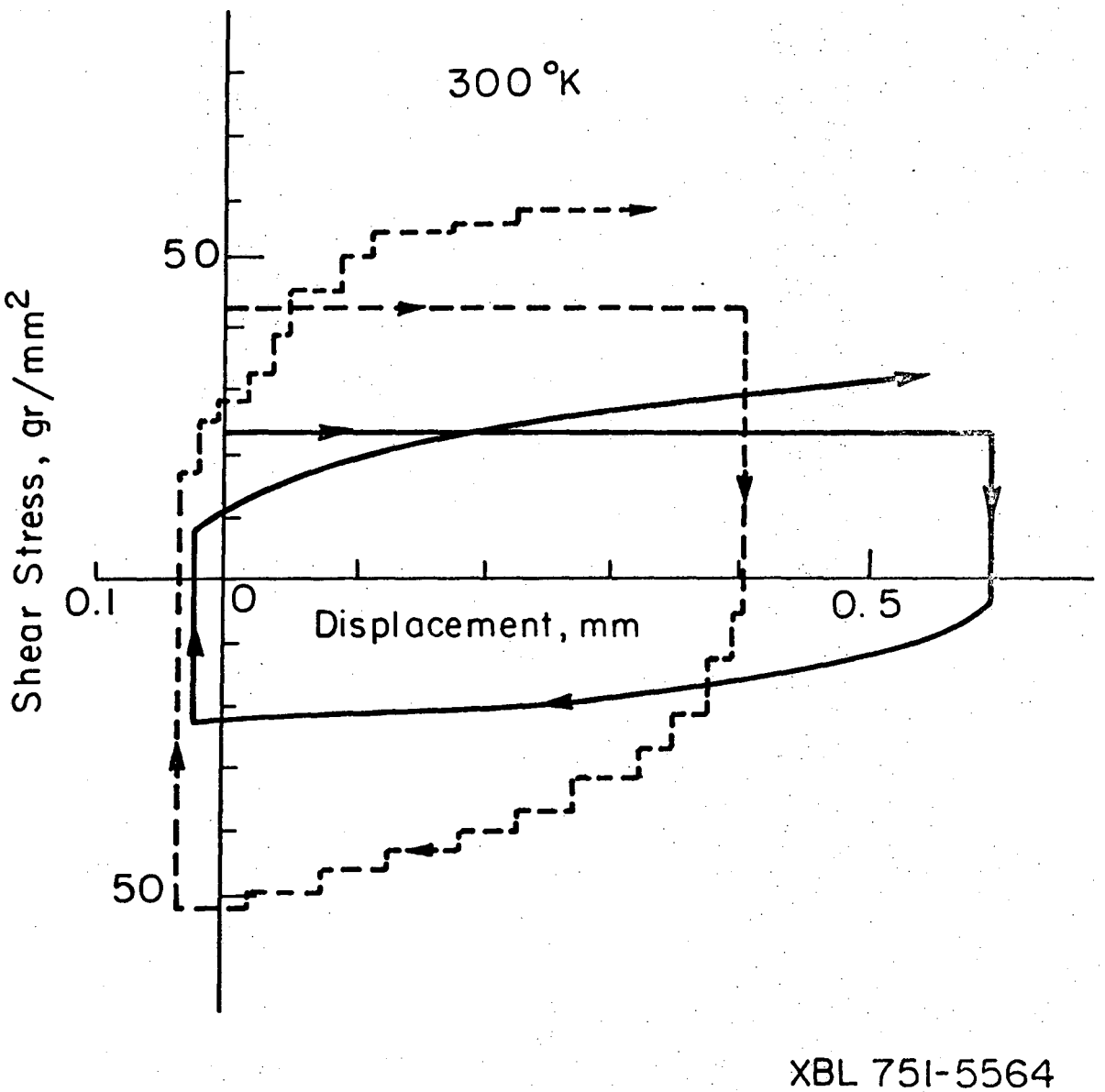
300 °K
50
50
Shear Stress, gr/mm²
0.1
0
0.5
Displacement, mm
XBL 751-5564

Fig. 2(b).

0 0 0 0 4 3 0 2 6 5 1

LEGAL NOTICE

This report was prepared as an account of work sponsored by the United States Government. Neither the United States nor the United States Atomic Energy Commission, nor any of their employees, nor any of their contractors, subcontractors, or their employees, makes any warranty, express or implied, or assumes any legal liability or responsibility for the accuracy, completeness or usefulness of any information, apparatus, product or process disclosed, or represents that its use would not infringe privately owned rights.

TECHNICAL INFORMATION DIVISION
LAWRENCE BERKELEY LABORATORY
UNIVERSITY OF CALIFORNIA
BERKELEY, CALIFORNIA 94720