LBL-37413
UC-000

Lawrence Berkeley Laboratory
UNIVERSITY OF CALIFORNIA

Accelerator & Fusion Research Division

Presented at Magnet Technology (MT-14), Tampere, Finland,
June 11–16, 1995, and to be published in the Proceedings

Electrical Performance of a String of Magnets Representing a Half-Cell of the LHC Machine

F. Rodriguez-Mateos, L. Coull, K. Dahlerup-Petersen,
D. Hagedorn, G. Krainz, A. Rijllart, and A. McInturff

June 1995

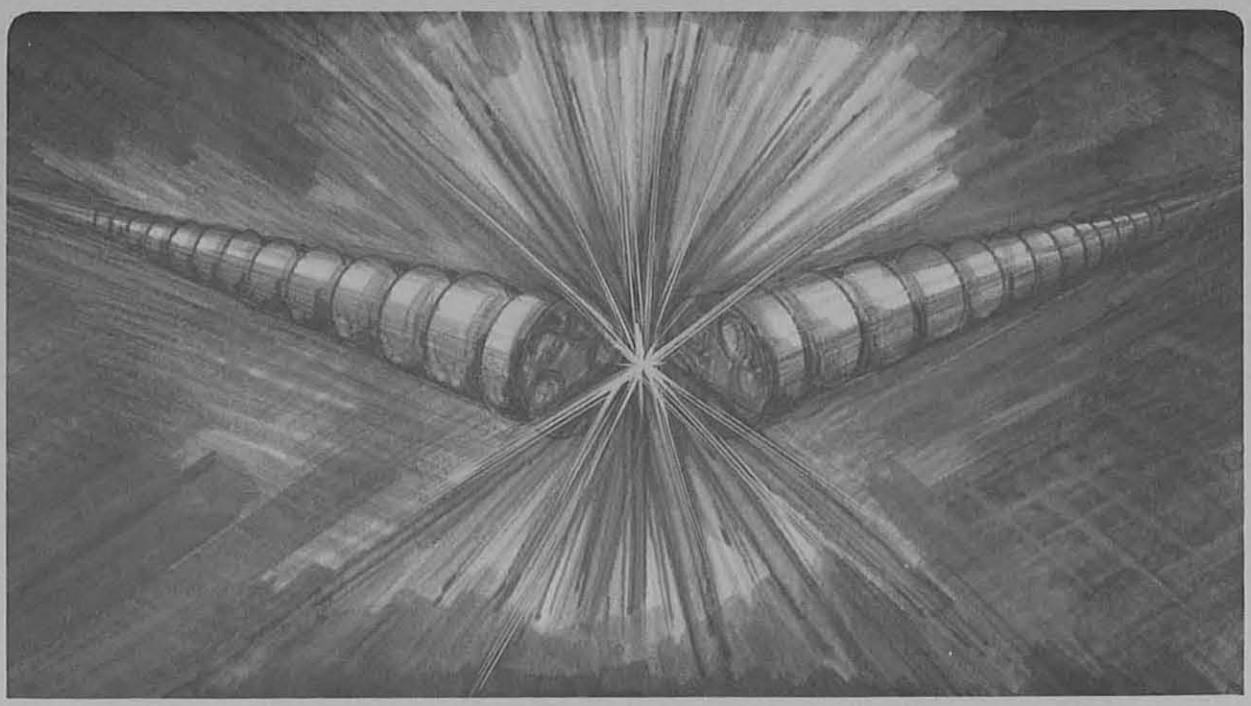

Prepared for the U.S. Department of Energy under Contract Number DE-AC03-76SF00098

DISCLAIMER

This document was prepared as an account of work sponsored by the United States Government. While this document is believed to contain correct information, neither the United States Government nor any agency thereof, nor The Regents of the University of California, nor any of their employees, makes any warranty, express or implied, or assumes any legal responsibility for the accuracy, completeness, or usefulness of any information, apparatus, product, or process disclosed, or represents that its use would not infringe privately owned rights. Reference herein to any specific commercial product, process, or service by its trade name, trademark, manufacturer, or otherwise, does not necessarily constitute or imply its endorsement, recommendation, or favoring by the United States Government or any agency thereof, or The Regents of the University of California. The views and opinions of authors expressed herein do not necessarily state or reflect those of the United States Government or any agency thereof, or The Regents of the University of California.

Lawrence Berkeley Laboratory is an equal opportunity employer.

LBL-37413
SC-MAG-505

Electrical Performance of a String of Magnets Representing a Half-cell of the LHC Machine

F. Rodriguez-Mateos, L. Coull, K. Dahlerup-Petersen, D. Hagedorn, G. Krainz, A. Rijllart

CERN
European Organization for Nuclear Research
CH-1211 Geneva 23, Switzerland

A. McInturff

Lawrence Berkeley Laboratory
University of California
Berkeley, California, U.S.A.

June 21, 1995

---

*This work was supported by CERN through the U.S. Department of Energy under contract # DE-AC03-76SF00098

LBL-37413
UC-000

Presented at Magnet Technology (MT-14), Tampere, Finland,
June 11–16, 1995, and to be published in the Proceedings

Electrical Performance of a String of Magnets Representing a Half-Cell of the LHC Machine

F. Rodriguez-Mateos, L. Coull, K. Dahlerup-Petersen,
D. Hagedorn, G. Krainz, A. Rijllart, and A. McInturff

June 1995

Prepared for the U.S. Department of Energy under Contract Number DE-AC03-76SF00098

DISCLAIMER

This document was prepared as an account of work sponsored by the United States Government. While this document is believed to contain correct information, neither the United States Government nor any agency thereof, nor The Regents of the University of California, nor any of their employees, makes any warranty, express or implied, or assumes any legal responsibility for the accuracy, completeness, or usefulness of any information, apparatus, product, or process disclosed, or represents that its use would not infringe privately owned rights. Reference herein to any specific commercial product, process, or service by its trade name, trademark, manufacturer, or otherwise, does not necessarily constitute or imply its endorsement, recommendation, or favoring by the United States Government or any agency thereof, or The Regents of the University of California. The views and opinions of authors expressed herein do not necessarily state or reflect those of the United States Government or any agency thereof, or The Regents of the University of California.

Lawrence Berkeley Laboratory is an equal opportunity employer.

LBL-37413
SC-MAG-505

Electrical Performance of a String of Magnets Representing a Half-cell of the LHC Machine

F. Rodriguez-Mateos, L. Coull, K. Dahlerup-Petersen, D. Hagedorn, G. Krainz, A. Rijllart

CERN
European Organization for Nuclear Research
CH-1211 Geneva 23, Switzerland

A. McInturff

Lawrence Berkeley Laboratory
University of California
Berkeley, California, U.S.A.

June 21, 1995

---

*This work was supported by CERN through the U.S. Department of Energy under contract # DE-AC03-76SF00098

SC-MAG-505
LBL-37413

Electrical Performance of a String of Magnets Representing a Half-cell of the LHC Machine

F. Rodriguez-Mateos, L. Coull, K. Dahlerup-Petersen, D. Hagedorn, G. Krainz, A. Rijllart
CERN, European Organization for Nuclear Research, CH-1211 Geneva 23, Switzerland

A. McInturff
Lawrence Berkeley Laboratory, USA

Abstract **- Tests have been carried out on a string of prototype superconducting magnets, consisting of one double-quadrupole and two double-dipoles forming the major part of a half-cell of the LHC machine. The magnets are protected individually by "cold diodes" and quench heaters. The electrical aspects of these tests are described here. The performance during quench of the protection diodes and the associated interconnections was studied. Tests determined the magnet quench performance in training and at different ramp-rates, and investigated the inter-magnet propagation of quenches. Current lead and inter-magnet contact resistances were controlled and the performance of the power converter and the dump switches assessed.**

I. Introduction

The commissioning and successful test of a "string" of superconducting magnets, representing a half-cell of the LHC machine, was a milestone mandated by the CERN member states in the LHC approval procedure. This would demonstrate the operation of key components in a complex power system with superfluid helium cryogenics. The magnet interconnections and cryogenic heat-loads could be measured, viable operation of the magnet chain under normal conditions and during quenches demonstrated, and in particular problems of quench propagation could be studied.

The construction of the test string is proceeding in stages. In a first stage a reduced version consisting of one quadrupole [1] and two dipole magnets [2], [3] was assembled and tested. Two additional dipoles will be added as soon as they are delivered and bench tested to form a complete half-cell of the LHC.

In this paper the electrical performance of this reduced string in terms of powering, quench protection and propagation, performance of cold by-pass diodes, etc., will be described. A more general description of the mechanical assembly and cryogenic and vacuum performance is given in [4].

In the original design of the LHC machine the quench protection acted at the half-cell level, and in the case of a quench in a magnet, all magnets in that half-cell were quenched by activating strip-heaters placed along the outer layers of their coils. Cold diodes were connected across each magnet but situated in the quadrupole cryostat for accessibility.

In order to have a test set-up which would give information on inter-magnet quench propagation, the "half-cell" was modified so as to have three series-connected cold-diodes across the quadrupole magnet, and individual diodes across each dipole. This simulates approximately machine conditions and allows the examination of quench propagation, by provoking a quench only in the quadrupole and then de-exciting the dipoles with a time constant of about 100 s.

II. Electrical Configuration During the Tests

Figure 1 shows the electrical layout of the test circuit. The power converter feeds the magnet chain, composed of the double-quadrupole and two double-dipoles, via two separate switches - a thyristor switch with a resistor of 0.7 mΩ in parallel, and a mechanical switch with 5.5 mΩ in parallel. Opening of the thyristor switch gives a current decay of about 100 s time-constant simulating normal de-excitation, and opening of the mechanical switch gives a fast de-excitation in case of dipole quench or other emergency. This emergency arrangement was judged necessary since it was not known at what level the quench heaters were effective, giving potentially the situation of one dipole quenching at say 3 kA due to quench propagation, and it not being possible to quench the second dipole by firing its heaters. The leads connecting the dipoles to their diodes, situated in the quadrupole cryostat, would then have received an excessive current load due to the slow de-excitation rate. These interconnections have a small cross-section since they normally carry only short transient currents caused by differences in quenching delays and quench rates [5]. In fact subsequent tests showed that the heaters were effective down to 1.5 kA and that the emergency switch and its resistor were, from this point of view, unnecessary. However they serve also as an emergency fast de-excitation in case of over-heating of cables, dump resistors, or power converter, and as a back-up for the thyristor switch.

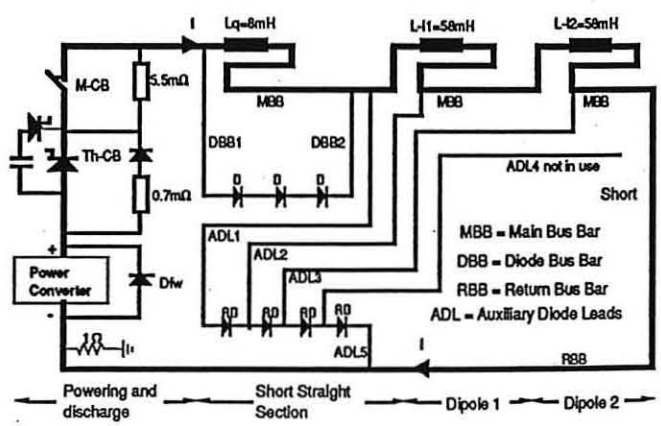

Fig. 1. Principle electrical scheme of the string with one twin-bore quadrupole and two twin-bore dipoles.

For quench detection the voltage differences between magnet poles and apertures are monitored and compared. When a certain threshold is exceeded the power converter is switched off, the heaters fired, and de-excitation resistors switched into circuit. For the series of quench propagation tests the quadrupole magnet heaters were fired and at the same time the thyristor switch was opened. The current then decays with a 100 s time constant through the still superconducting dipoles and through the three series-connected cold diodes connected across the quadrupole. This diode packet will reach a temperature estimated to be 200 K during the 100 s time-constant de-excitation. Whether, or how quickly, the quench spreads to the adjacent dipoles either by heat conduction over the bus-bars or by expulsion of warm helium gas from the quadrupole cryostat can be tested.

III. Data Acquisition

Data from the experiments on the LHC string are recorded by a 450-channel data acquisition system. The system was fully specified [6] and purchased from industry as a turn-key commercial product. The system consists of VME crates containing the ADC modules, a front-end CPU and a communication module via which the data is transferred to a SUN ™ workstation.

The latter runs a LabView ™ application which presents the data to the user in the form of strip charts and stores the data on the local disk. Each channel is acquired with 16-bit resolution between ± 10 V. A number of signal conditioners and filters are installed between the transducers/voltage taps and the ADCs. The system implements two different functions: the archiver and the transient recorder. The archiver samples once per second every channel and compares this value to the last acquired value: if they differ by more than an individually programmable amount, the last value is stored; otherwise, it is discarded. Every ten minutes, regardless of the comparison the data are stored on disk. The transient recorder operates like a digital oscilloscope. However, the data is acquired at two frequencies: high frequency (up to 1 kHz) before and after the quench and a lower frequency to observe the tail of the signal. Typically, voltage signals are recorded at 1 kHz during 500 ms before the quench, during 2 s after the quench and at 100 Hz during the following 8 s. Each channel can be observed using the archiver and the transient recorder. In order to allow a correlation between transient data, each transient recorder acquisition is absolute time stamped with a time resolution of ± 1ms. Both the archiver and transient data are transferred once a day to a central database from where they are accessible on any computer in the network for viewing and analysis.

IV. Instrumentation

The magnets have all the same types of standard instrumentation, including voltage taps, temperature sensors and strain-gauge sensors (pressure transducers). In order to protect the magnets and to monitor the voltage distribution in the string, voltage taps are located at the beginning and the end of each pole coil of the magnets, in the bus-bars, at the cold diodes, and on the current leads.

Two different types of temperature sensors are used to measure the temperature from ambient temperature down to about 1.7 K. Carbon resistor thermometers are calibrated individually in the range between 1.7 K and 25 K. Above this temperature platinum resistor thermometers are used with the standard calibration curve.

One carbon sensor and one platinum sensor are mounted on both end-plates of each magnet cold-mass. Carbon sensors are mounted in the quadrupole diode bus-bar to measure the temperature rise due to the heating of the diode triplet assembly after a quench, while platinum sensors are placed on the heat sinks of the triplet.

Strain-gauge sensors are located in the end volumes of the cold masses in order to measure the helium transient pressure.

V. Power Circuit Elements

The power converter (20 kA, 14 V) is a 12-phase thyristor controlled rectifier with free-wheeling diodes and a passive filter. The current measurement is with a high precision DCCT and a current stability of better than 0.01% is achieved. The thyristor switch consists of six parallel thyristors with forced commutation, and the mechanical circuit breakers are six industrial fast-switching dc circuit breakers.

VI. Quench Protection System and Operation Interlocks

The Quench Protection System (QPS) is composed of commercial isolation amplifiers for quench voltage measurement and detection [5], an interlock matrix managing the fast actions to be performed in case of a trigger, and a Programmable Logic Controller (PLC) automat controlling a number of variables on a slower time-scale.

The interlock matrix contains the hardwired logic responsible for the security of the string. Inputs to this are triggers from the logic output of the quench detectors cards, a

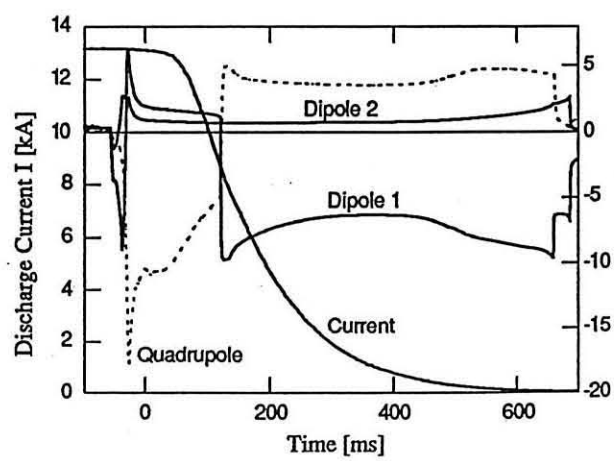

Fig. 2. Discharge current and magnet voltages versus time after a natural quench in Dipole 2 at 13.2 kA.

TABLE I
TOTAL MIITS VERSUS STRING CURRENT
Protection Heater Initiated (Typical worst case scenario)

Current [kA]	1.5	3.0	6.0	9.0	12.4	13.1
Quadrupole	3.1	8.4	13.9	40.1	27.6	22.5±2.0
MB1	3.3	8.5	13.9	35.0	29.6	25.5±4.0
MB2	3.3	8.6	14.2	37.0	27.1	22.3±1.0

signal indicating an accidental opening of any of the quench valves, and a signal indicating a change of state in the power converter. The outputs, corresponding to actions to be taken, are sent to the following systems: quench heater power supplies, quench relief valves, cryogenic system, vacuum system, power converter, dump switches, and the data acquisition unit.

The automat supervises the state of the following parameters:

- Cryogenic temperatures and levels.
- Water flow in the power water-cooled cables.
- Dump switches closed and armed.
- Heater power supplies charged.
- Temperature range at the 90% level of the current leads.
- Maximum allowable voltages across the current leads.

The output from the automat is linked into the external interlock chain of the power converter. Moreover, there is a direct interlock link between the power converter and the switch system such that any overheating in one of the systems provokes a fast de-excitation.

During commissioning the isolation amplifiers and the quench detectors required balancing of inductive pick-up of signals. Equally, some of the trigger levels have been increased to allow for the drift of the signals, especially during the de-excitation of the string. The thresholds for the detectors are as follows: 40 mV for the quadrupole inter-pole comparators, 60 mV for the dipole inter-pole comparators, 100 mV for the magnet inter-aperture comparators, 700 mV for the dipole inter-magnets comparator, and from 20 mV to 200 mV for the bus-bars.

VII. RESULTS

There were over 50 events recorded in the data acquisition system for the string in the course of this run. Two thirds of these events were associated with the commissioning of the power, quench protection, and data acquisition systems. These events included ramp downs, heater quenches, dI/dt driven quenches, and three spontaneous quenches above the nominal operating current of 12.4 kA. The first occurred at 12.77 kA, the second at 13.06 kA, and the third at 13.18 kA (just above 9 tesla).

Once the commissioning sequence was completed it was shown possible to ramp from the nominal operational current of 12.4 kA at a rate of at least 120 A/s to zero without provoking a dI/dt driven quench. The string was also ramped up at the nominal rate of 10 A/s to nominal field after the commissioning phase.

There was at least one dI/dt driven quench which occurred during the commissioning. This occurred at 3.7 kA after several kiloamperes of ramp-down at over 300 A/s. The quench was then detected and the heaters fired driving the current quickly over to the protection diode and distributing the energy safely in the magnet. The protection heaters which reach an adiabatic temperature of about 120 K with a typical discharge time-constant of 60 ms can effectively quench the magnets at cryostable currents of 1.5 kA (0.1 W/cm^2). This is shown in the lowest string current of the MIIT's (mega-amperes squared seconds) data in Table I. The MIIT's table clearly shows the peaking effect that occurs because of the shortening of each magnet by the diodes.

One of the important parameters of a protection heater system is the thermal diffusion time of the heat pulse used to switch the windings from the superconducting state to normal resistive state. The time-delays measured for the protection heater system for the different elements are given in Table II as a function of the string current.

There are a very large number of "field-made" superconductor splices in the string assembly and it was therefore of great interest to determine the joint resistances. These are given in Table III.

The differing rates of resistive voltage build-up has been investigated in other accelerator strings [7] usually because of the resulting excessive voltages to ground.

In the situation with a cold diode per magnet however this is harmless but can be observed by the turn-off of the diode across the slower resistive-rate magnet. See Table IV for the measured rates of resistive voltage for the different magnets. Figure 2 shows the diode turn-on and later turn-off. The maximum voltage to earth measured on the magnet poles during the quenches was in the order of 180 V.

The maximum pressure seen during quench was measured next to the fastest resistance change device (< 11 bar). The typical operating temperature was between 1.75 and 1.85 K at slightly above 1 atmosphere pressure. For more detail of the cryogenic operation of the string see [8].

Quench propagation was investigated by firing the quench heaters of the quadrupole and opening the thyristor switch to give a current decay of about 100 s time-constant from a starting current of 9 kA. A quench was detected in the first dipole after about 60 s when the current had reached 3 kA.

TABLE II
TIME DELAY FROM PROTECTION HEATERS FIRING UNTIL RESISTANCE APPEARS Δt (HF—>Rin) [ms]

Current [kA]	1.5	3.0	6.0	9.0	12.4	13.1
Quadrupole	188	103	54	31	12	9
MB1-Dipole	102	77	58	44	22	14
MB2-Dipole	146	42	39	18	15	14

TABLE III
AVERAGE SPLICE JOINT RESISTANCE CABLE/CABLE PER JOINT [nΩ] MEASURED BETWEEN 9 kA TO 12 kA

Return Bus Bar String Joint (5)	1.77 ± 0.10
Main Bus Bar Short Straight Section (4)	1.25 ± 0.15

TABLE IV
RATES OF RESISTIVE VOLTAGE INCREASE DURING THE FIRST 100 ms (1/2 QUAD) AFTER RESISTANCE DETECTED BETWEEN 12.4 TO 13.1 kA [V/s]

Event#	274	325	316	278	327
Type	heater	spont.	heater	heater	heater
Quench-Current [kA]	13.1	13.2	12.4	13.1	13.1
Quadrupole	1040	1154	270	850	380
MB1-Dipole	712	800	619	553	604
MB2-Dipole	1442	1380	1287	1273	1557

This test was repeated for various quench valve opening procedures. After investigation it appeared that the quench was thermally propagated because the quench valve geometry does not allow a proper gas venting without an abrupt liquid removal from the quadrupole cold mass. This leads to warm gas formation which then travels to the next dipole connection end.

VIII. Conclusions

There were no obvious features or parameters either discovered or measured which would preclude the operation of the "LHC" machine as now proposed. All measured temperatures, voltages, and pressures were well within the tolerable limits. The problem of the quench propagation requires further investigation and the position of the quenchprotection valves will have to be reviewed.

Acknowledgment

Many people participated in the preparation of the tests and in the actual testing. In particular the authors would like to acknowledge the efforts and support of P. Faugeras, R. Saban, and the other members of the "String Team", the cryogenic system operators, P. Legrand and the "Test Bench" team, W. Koelemeijer and his team, A. Issenbeck and the SL/PC group, and N. Fournier.

References

[1] P. Genevey et al.,"Cryogenic tests of first two LHC quadrupole prototypes," Proc. Appl. Superconductivity Confemce, Boston, (Oct. 14-17, 1994).

[2] R. Perin for the LHC Magnet Team, "Status of LHC programme and magnet development," Proc. Appl. Superconductivity Conf., Boston, (Oct. 14-17,1994), CERN LHC Note 296.

[3] M. Bona et al., "Performance of the first CERN-INFN 10m long Superconducting Dipole Prototype for the LHC", EPAC, London, UK, 27 June-1 July 1994.

[4] P. Faugeras, for the LHC string team, "Assembly and commissioning of the LHC test string", PAC, Dallas, 1995.

[5] L. Coull,D. Hagedorn,V. Remondino, F. Rodriguez-Mateos, "LHC magnet quench protection system", MT13, Victoria, 1993.

[6] Specification for a Data Acquisition System for the LHC String, CERN/AT-Group Note/94-02(IC).

[7] W. Burgett et al., "Power tests of a string of magnets of the superconducting supercollider", unpublished.

[8] A. Bezaguet et al. "The superfluid helium cryogenic system for the LHC string: design, construction and first operation", unpublished.