0 0 0 0 4 3 0 2 9 3 3

Submitted to Radiation Effects

LBL-3757
Preprint c.1

RECEIVED
LAWRENCE
BERKELEY LABORATORY

NOV 18 1975

LIBRARY AND
DOCUMENTS SECTION

ON THE POSSIBILITY OF NUCLEATING LOOPS WITH BURGERS VECTOR ⟨DC'⟩ BY THE CLUSTERING OF INTERSTITIALS

J. Grilhe, K. Seshan, and J. Washburn

May 1975

Prepared for the U. S. Energy Research and
Development Administration under Contract W-7405-ENG-48

For Reference

Not to be taken from this room

LAWRENCE BERKELEY LABORATORY
UNIVERSITY OF CALIFORNIA
BERKELEY

LBL-3757
c.1

DISCLAIMER

This document was prepared as an account of work sponsored by the United States Government. While this document is believed to contain correct information, neither the United States Government nor any agency thereof, nor the Regents of the University of California, nor any of their employees, makes any warranty, express or implied, or assumes any legal responsibility for the accuracy, completeness, or usefulness of any information, apparatus, product, or process disclosed, or represents that its use would not infringe privately owned rights. Reference herein to any specific commercial product, process, or service by its trade name, trademark, manufacturer, or otherwise, does not necessarily constitute or imply its endorsement, recommendation, or favoring by the United States Government or any agency thereof, or the Regents of the University of California. The views and opinions of authors expressed herein do not necessarily state or reflect those of the United States Government or any agency thereof or the Regents of the University of California.

0 0 0 0 4 3 0 2 9 3 4

ON THE POSSIBILITY OF NUCLEATING LOOPS WITH BURGERS VECTOR ⟨DC'⟩ BY THE CLUSTERING OF INTERSTITIALS

J. Grilhé,* K. Seshan, and J. Washburn

Inorganic Materials Research Division, Lawrence Berkeley Laboratory and Department of Materials Science and Engineering, College of Engineering; University of California, Berkeley, California 94720

ABSTRACT

It is argued that interstitials could cluster to form loops with Burgers vector ⟨DC'⟩ = 1/6⟨114⟩, especially if the extrinsic stacking fault energy (SFE), γ_E, is higher than the intrinsic γ_I. DC' is a perfect dislocation loop superimposed on an intrinsic stacking fault loop.

A loop DC' should be widely split on one plane only and should grow to become linear and "rod-like" along a ⟨110⟩ direction. Defects with this geometry have been observed in ion-implanted crystals of silicon containing boron.

*Permanent address: Laboratorie de Metallurgie Physique, Faculty des Sciences de Potiers, France.

It is well known that interstitials cluster and form Frank loops with Burgers vector Dδ (Fig. 1a). This is equivalent to a perfect loop DB enclosing an extrinsic stacking fault loop Bδ:

$$D\delta = DB + B\delta$$

$$1/3[111] = 1/2[011] + 1/6[2\bar{1}\bar{1}]$$

The extrinsic fault Bδ is equivalent to two intrinsic faults δA and δC as:

$$B\delta = \delta A + \delta C$$

$$1/6[2\bar{1}\bar{1}] = 1/6[1\bar{2}1] + 1/6[11\bar{2}]$$

This detailed view of the Frank loop Dδ is illustrated in Fig. 1d. If both the shears δA and δC are eliminated the perfect loop DB results, Fig. 1b.

However, if the extrinsic SFE is enough greater than the intrinsic, loops of the type ⟨DC'⟩ (Fig. 1c) become stable relative to Frank loops at a reasonably small size. DC' has the magnitude of a perfect loop and also contains an intrinsic fault:

$$DC' = DB + \delta A$$

$$1/6[114] = 1/2[011] + 1/6[1\bar{2}1] \qquad \text{Fig. (1e)}$$

The difference in stacking fault energy required to make DC' stable relative to a Frank loop may be estimated by determining the energy of the loop DC' relative to that of Dδ at some critical radius r_c.

Since

$$DC' = D\delta + C\delta$$

$$1/6[114] = 1/3[111] + 1/6[\bar{1}\bar{1}2]$$

the self energy $W_{DC'}$ of the loop DC' is

$$W_{DC'} = W_{D\delta} + W_{C\delta} + \pi r^2 \gamma_I$$

and that of the Frank loop W_F:

$$W_F = W_{D\delta} + \pi Y^2 \gamma E.$$

At some critical radius r_c if $\gamma_E > \gamma_I$

$$W_F = W_{DC'}$$

or

$$\pi r^2 (\gamma_E - \gamma_I) = W_{C\delta} = \frac{\mu b_{C\delta}^2 r}{2} \ln \left[\frac{3r}{r_o}\right] \quad \text{(after Hirth \& Lothe}^1\text{)}$$

Using $\Gamma = \gamma/ub$ and $R = r_c/b$ (after Saada)[2] and $r_o = 3b$ where $b = a/2\langle 110\rangle$ and $\Delta\Gamma = \Gamma_E - \Gamma_I$ it follows that

$$R\Delta\Gamma = \frac{1}{4\pi} \ln R$$

A plot of $\Delta\Gamma$ vs R is shown in Fig. 2. If $\Delta\Gamma$ is of the order of 5×10^{-3}, i.e. $\gamma_E - \gamma_I \sim 60$ ergs/cm^2 in copper for instance, the transformation of a Frank loop to a loop of DC' at a radius of about ~50b (or ~ 120Å) is possible and the critical radius to nucleate DC' would be ~ 60Å

<u>On the splitting of DC'</u>:

A possible splitting of the loop DC' that leads to a reduction of its self energy is shown in Fig. 3. DC' splits on the (c) plane as

$$DC' = D\gamma + \gamma C'$$

$$1/6[114] = 1/6[112] + 1/3[001]$$

$\gamma C'$ is the stair rod $\gamma\delta/AB$ which is 1/3[001].

This reaction is shown in an inside view in Fig. 3a and top view in Fig. 3b. It is unlikely for DC' to split on the other two intersecting {111} planes because of the larger Burgers vector required for the stair rod dislocations. For example, if DC' were to split on the (a) plane αC' forms:

$$DC' = D\alpha + \alpha C'$$

$$1/6[114] = 1/6[121] + 1/6[013]$$

and likewise on the (b) plane.

The splitting of DC' at the earliest stage is shown in Fig. 3b. Further growth should occur at the four sides that are not widely split where jogs are easily nucleated. Therefore, DC' should grow to become elongated or rod-like extended along a ⟨110⟩ direction; it should also tend to shrink from the ends and not be expected to pinch off into rows of circular loops during annealing.

Linear defects with these characteristics have been reported by several workers.[3-8] A typical area in a 111 silicon crystal implanted with P^+ ions and annealed is shown in Fig. 4. The width of the defects should correspond to the smallest size L_c (Fig. 3b) at which splitting starts. In p-type silicon, using weak beam images, this size is estimated to be 35±5Å.

The linearly extended loop DC' also appears consistent with the following experimental facts concerning the "rod-like" defects is ion-implanted silicon:

1. Along each ⟨110⟩ set there are at least two different Burgers vectors: one type showing inside and the other showing outside electron diffraction contrast for the same diffracting condition, Fig. 4.

This is consistent with the fact that along each ⟨110⟩ direction there are two possible ⟨DC'⟩ type loops, DC' and CD' (Fig. 1). They are equivalent and make equal angles of 19° with the [001] direction.

2. During annealing some of the linear defects suddenly change Burgers vector and rotate away from the ⟨110⟩ or grow in width. This is consistent with the fact that the faulted loop DC' can unfault to become a perfect dislocation dipole DB as:

$$DC' + A\delta = DB$$

$$1/6[114] + 1/6[12\bar{1}] = 1/2[011]$$

3. Madden and Davidson[5] and Wu (8) on the basis of extensive contrast experiments reported that the linear defects were interstitial, faulted and best described by a Burgers vector of the type 1/k[001]. The loop DC' is interstitial and faulted. Its Burgers vector 1/6[114] makes a small angle of 19° with the [001] direction. Further DC' should split as:

$$DC' = D\gamma + \gamma C'$$

$$1/6[114] = 1/6[112] + 1/3[001]$$

Since determination of habit plane and Burgers vector is difficult for narrow rod shaped defects, particularly if stacking faults on non-parallel planes are involved, it is not certain that these contrast experiments are in conflict with this proposal.

CONCLUSIONS

If the extrinsic stacking fault energy is enough higher than the intrinsic it may be possible to nucleate loops of Burgers vector $\langle DC' \rangle = 1/6\langle 114 \rangle$ directly. Such loops should grow to become "rod-like" and would be stable relative to Frank loops above a reasonably small size. The properties of such defects appear to be consistent with the behavior of some rod-like defects observed in ion-implanted silicon.

Since such linear defects have rarely been observed without the presence of boron,[7,8] boron possibly increases the extrinsic SFE of silicon over the intrinsic or in some way facilitates the nucleation of DC' or interferes with the nucleation of $D\delta$.

ACKNOWLEDGEMENTS

One of us (JG) would like to thank NATO for a fellowship and the Department of Materials Science and Engineering and the Lawrence Berkeley Laboratory for the hospitality shown during his stay.

This work was supported by the U. S. Energy Research and Development Adminstration.

REFERENCES

1. J. P. Hirth and J. Lothe, The Theory of Dislocations (McGraw Hill, NY, 1968), p. 113.
2. G. Saada, Acta Met. 10, 551 (1962).
3. E. Nes and J. Washburn, J. Appl. Phys. 42(9), 3562 (1971).
4. L. T. Chadderton and F. H. Eisen, Rad. Effects 14, 267 (1972).
5. K. Seshan and J. Washburn, Rad. Effects 14, 267 (1972).
6. P. K. Madden and S. N. Davidson, Rad. Effects 7, 129 (1971).
7. K. Seshan and J. Washburn, Phys. Stat. Sol. 26(1), 345 (1974).

7a. K. Seshan and J. Washburn, Rad. Effects (in print).

8. W. K. Wu, Ph. D. Thesis, University of California, Berkeley (in progress).

FIGURE CAPTIONS

Fig. 1. The Thomson tetrahedron notation used in this paper. The point C' is obtained by adding the vector Cδ to Cδ or δA to DB i.e.

$$DC' = DB + \delta A = DB + BC'$$

$$1/6[114] = 1/2[011] + 1/6[1\bar{2}1]$$

Likewise, D' is obtained by adding γA to DB. Vectors of the type ⟨DC'⟩ have the same magnitude as perfect vectors of the type ⟨DA⟩. Notice also that DC' and CD' are equivalent. Also shown is an interstitial Frank loop Dδ (a), a perfect loop DB(b) and a DC' loop (c). (d) and (e) show the detailed descriptions of Dδ and DC' respectively.

Fig. 2. Shows the difference in stacking fault energy (ΔΓ) required to make DC' stable relating to a Frank loop as a function of radius R.

Fig. 3. (a) Shows the splitting of the interstitial faulted loop DC' on the (c) plane. (b) The same in top view. Notice that DC' is split widely on the (c) plane only. (c) Shows how DC' will grow to become long and rod-like. The incoming interstitial prefers to incorporate at the jogs along the less widely split edges. Lc is the width at which DC' first begins to split. Note that upon growth Lc does not change. DC' should also shrink from the ends or unfault to become a perfect dislocation dipole DB'.

Fig. 4. A dark-field image of an area in P^+ ion implanted silicon showing linear defects and Frank dislocation loops after a 15 min anneal at 800°C. The linear defects lie along the six 110 directions AB, BC, etc. of the Thompson tetrahedron. Notice that defects can be found along the same direction, e.g., BD which show inside or outside images. The defects inclined to the foil plane ABC(111) also show different kinds of oscillating contrast even though they belong to the same ⟨110⟩ set.

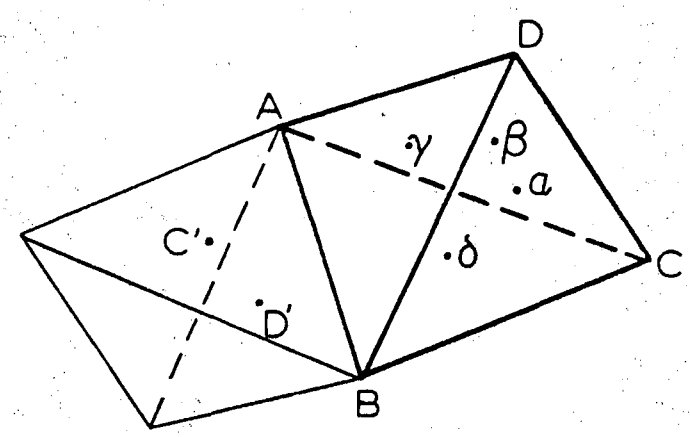

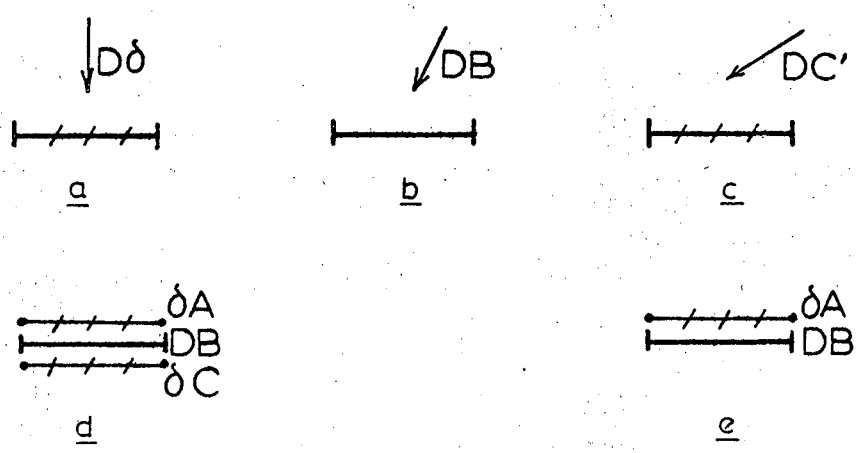

XBL753-5996

Fig. 1

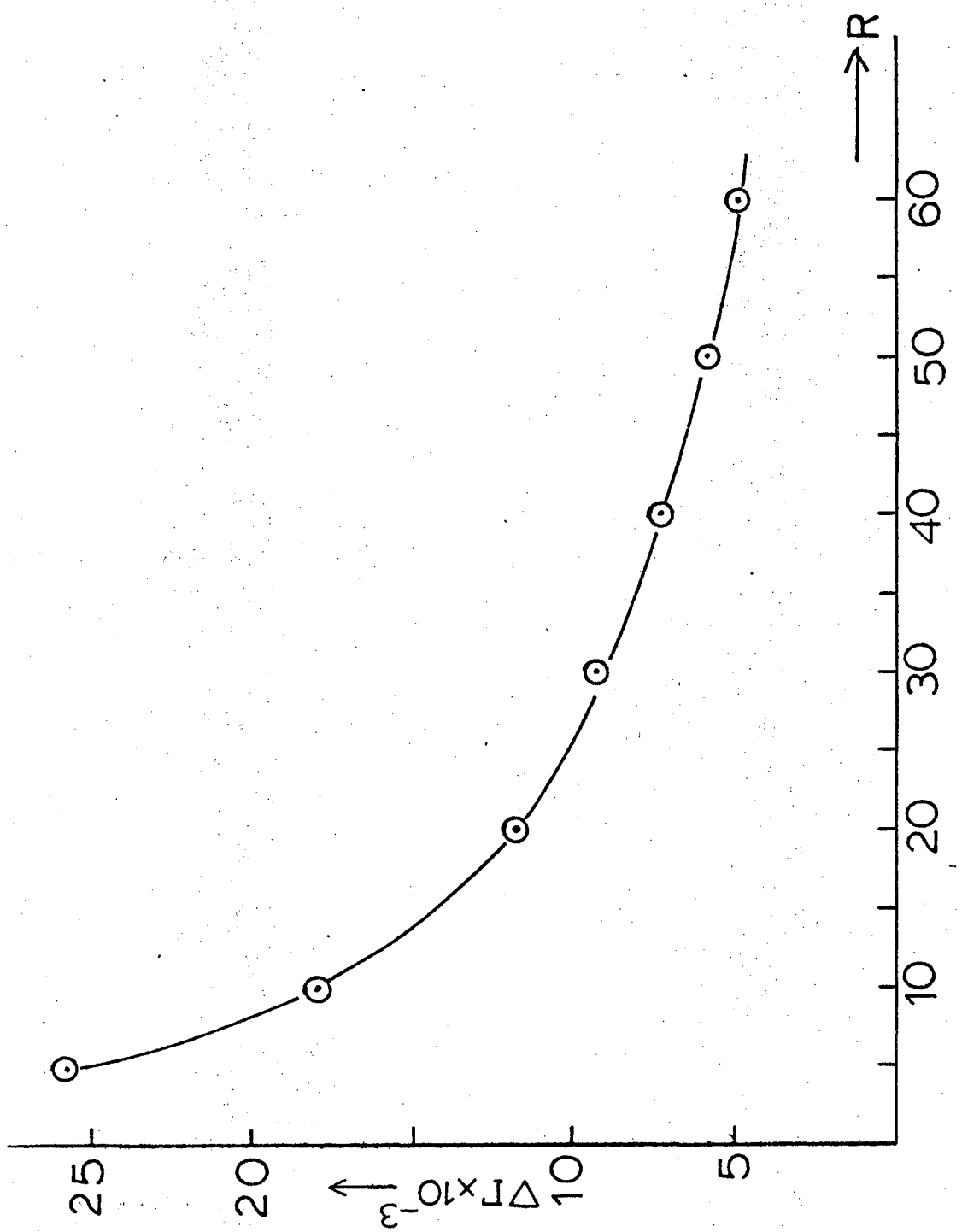

XBL 754-6171

Fig. 2

0 0 0 0 4 3 0 2 9 4 0

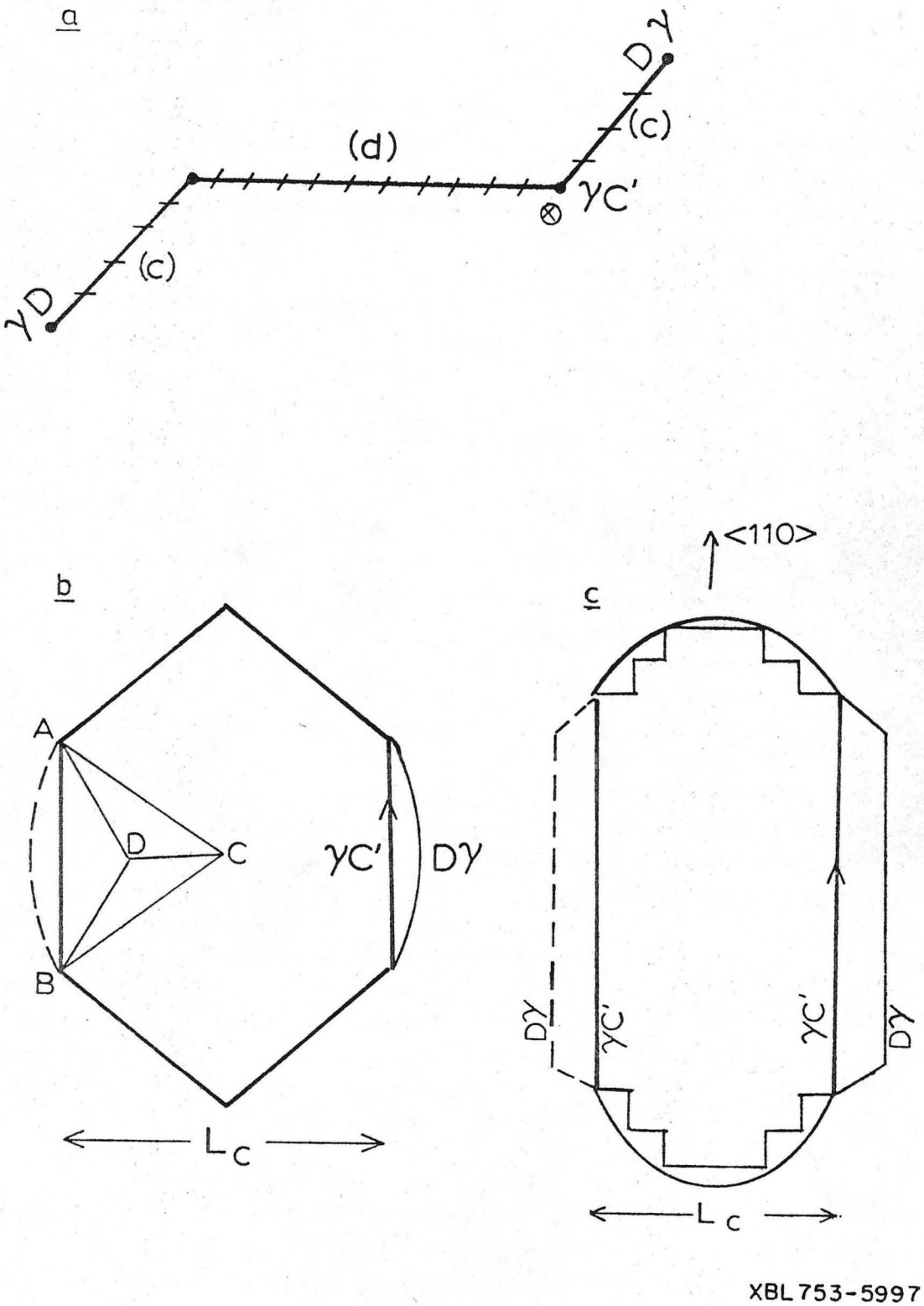

Fig. 3

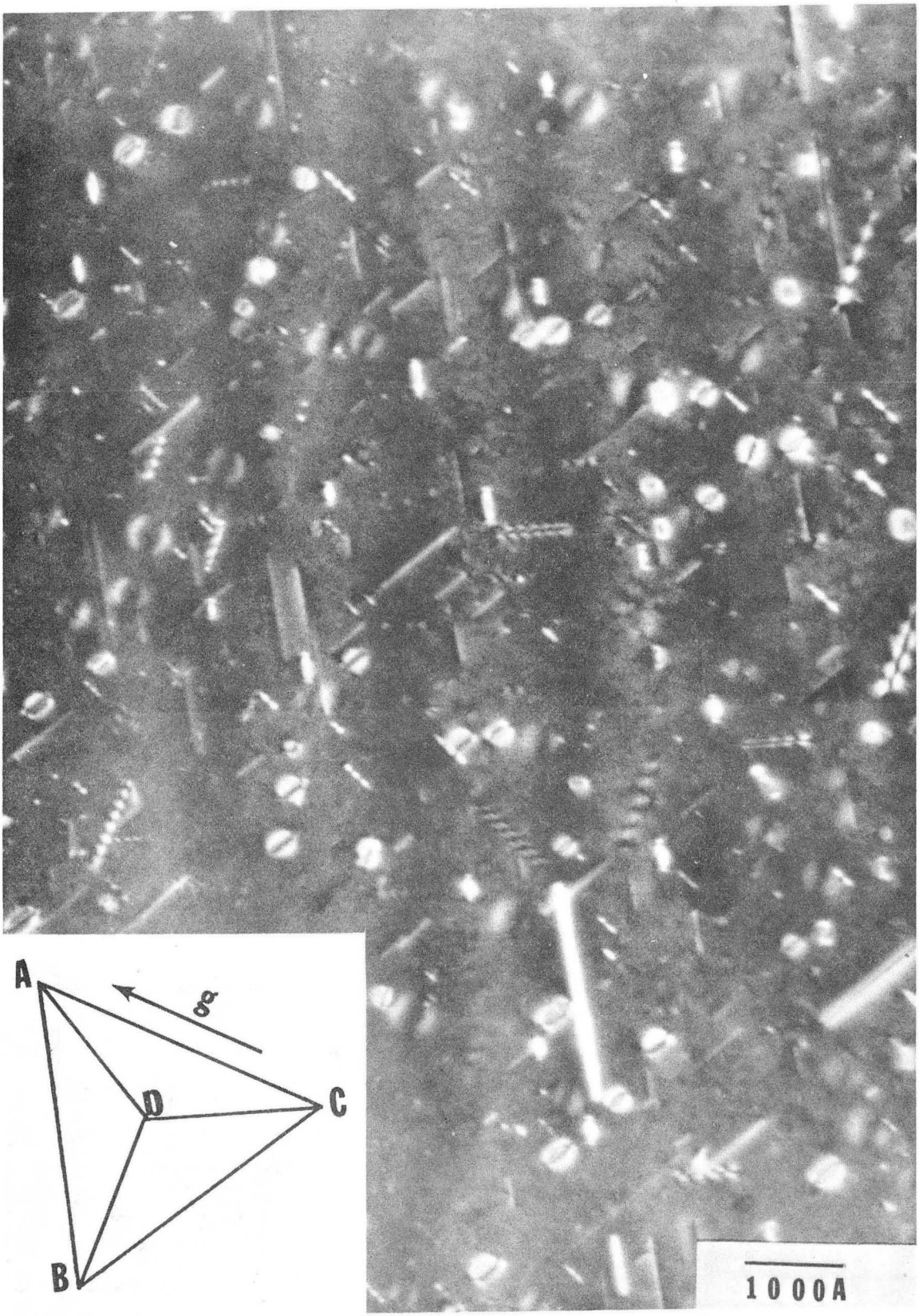

XBB 753-2193

Fig. 4.

0 0 0 0 4 3 0 2 9 4 1

LEGAL NOTICE

This report was prepared as an account of work sponsored by the United States Government. Neither the United States nor the United States Energy Research and Development Administration, nor any of their employees, nor any of their contractors, subcontractors, or their employees, makes any warranty, express or implied, or assumes any legal liability or responsibility for the accuracy, completeness or usefulness of any information, apparatus, product or process disclosed, or represents that its use would not infringe privately owned rights.

TECHNICAL INFORMATION DIVISION
LAWRENCE BERKELEY LABORATORY
UNIVERSITY OF CALIFORNIA
BERKELEY, CALIFORNIA 94720