LBL-37619
UC-404

Lawrence Berkeley Laboratory

UNIVERSITY OF CALIFORNIA

Materials Sciences Division

National Center for Electron Microscopy

Presented at iib'95, Lisbon, Portugal, June 26–30, 1995,
and to be published in the Proceedings

TEM Characterization of Invariant Line Interfaces and Structural Ledges in a Mo-Si Alloy

S.Q. Xiao, U. Dahmen, S.A. Maloy, and A.H. Heuer

June 1995

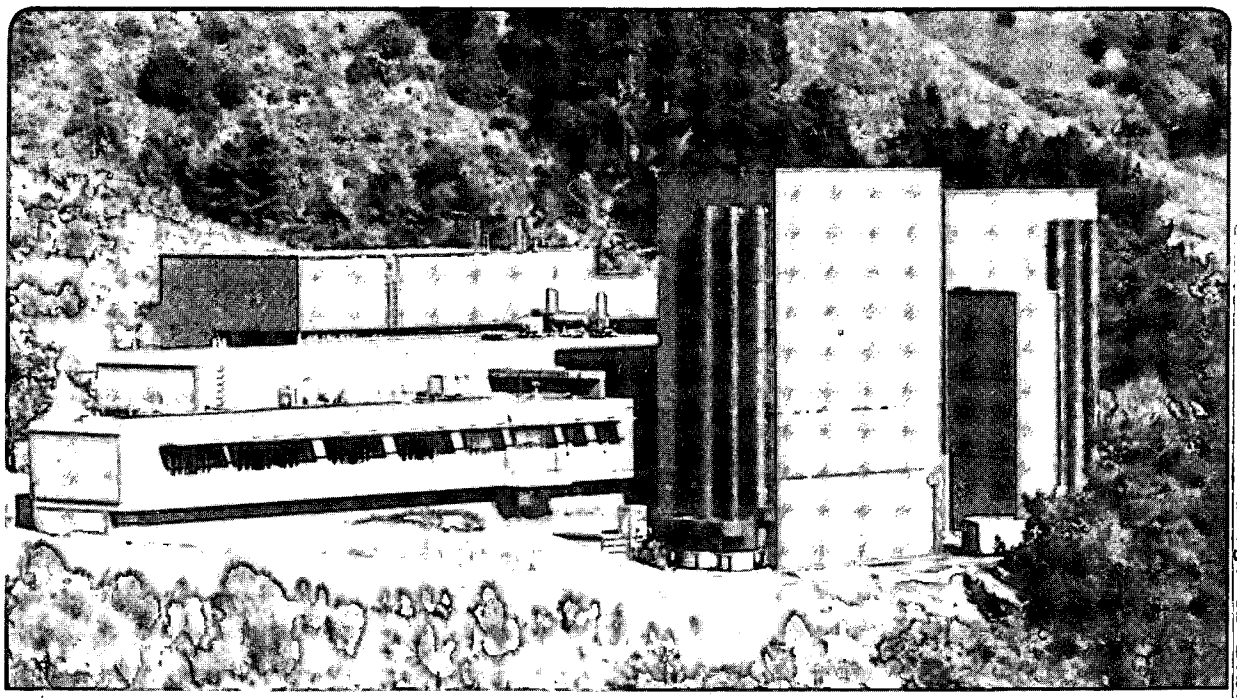

REFERENCE COPY
Does Not
Circulate
Bldg. 50 Library.
LBL-37619
Copy 1

Prepared for the U.S. Department of Energy under Contract Number DE-AC03-76SF00098

DISCLAIMER

This document was prepared as an account of work sponsored by the United States Government. While this document is believed to contain correct information, neither the United States Government nor any agency thereof, nor the Regents of the University of California, nor any of their employees, makes any warranty, express or implied, or assumes any legal responsibility for the accuracy, completeness, or usefulness of any information, apparatus, product, or process disclosed, or represents that its use would not infringe privately owned rights. Reference herein to any specific commercial product, process, or service by its trade name, trademark, manufacturer, or otherwise, does not necessarily constitute or imply its endorsement, recommendation, or favoring by the United States Government or any agency thereof, or the Regents of the University of California. The views and opinions of authors expressed herein do not necessarily state or reflect those of the United States Government or any agency thereof or the Regents of the University of California.

LBL-37619

TEM Characterization of Invariant Line Interfaces and Structural Ledges in a Mo-Si Alloy

S.Q. Xiao, U. Dahmen, S.A. Maloy* and A.H. Heuer†

Materials Sciences Division
National Center for Electron Microscopy
Lawrence Berkeley Laboratory
University of California, Berkeley, CA 94720

*Los Alamos National Laboratory
Los Alamos, N.M.

†Case Western Reserve University
Dept. of MSE
Cleveland, OH.

Proc. iib'95
Lisbon, Portugal, 6/26-6/30/95

This work was supported in part by the Director, Office of Energy Research, Office of Basic Energy Sciences, Materials Science Division of the U.S. Department of Energy under Contract No. DE-AC03-76SF00098.

TEM CHARACTERIZATION OF INVARIANT LINE INTERFACES AND STRUCTURAL LEDGES IN A Mo-Si ALLOY

S.Q. XIAO[1], U. DAHMEN[1,2], S.A. MALOY[3] AND A.H. HEUER[4]
[1]National Center for Electron Microscopy, LBL, Berkeley, California, USA,
[2]CNRS/CECM Vitry-sur-Seine, France,
[3]Los Alamos National Laboratory, Los Alamos, New Mexico, USA,
[4]Dep. of MSE, Case Western Reserve University, Cleveland, Ohio, USA

Keywords : electron microscopy, interface, intermetallic, invariant line, Mo-Si, partial dislocations, precipitates, structural ledges

Abstract

Two distinct <1$\bar{1}$0> lath morphologies of Mo_5Si_3 precipitates observed in $MoSi_2$ differ in their cross-sectional shape and lattice orientation. Type I laths exhibit a rectangular cross section, with interfaces parallel to low-index planes, while Type II laths are parallelogram-shaped, with their major interface at 13° to the type I precipitate. The corresponding orientation relationships differ by a 1.8° rotation around the lath axis. In this study, the difference between the two characteristic morphologies and orientation relationships is shown to be the formation of an invariant line strain for type II precipitates. On an atomic scale, both interfaces have a terrace and ledge structure but differ in the stacking sequence of interfacial ledges associated with partial dislocations. The structural unit model and the invariant line model predict identical interface geometries which agree closely with the observations.

Results

Second phase precipitates play an important role in the microstructure of $MoSi_2$ based alloys, but their morphology and interface structure are not well understood. In a recent TEM study [1], Mo_5Si_3 precipitates in $MoSi_2$ were found to be lath-shaped, with an orientation relationship in which one set of <110> directions in both structures were parallel, while the pair of [001] directions enclosed an angle of 90°. This is illustrated schematically in Figure 1. The lath axis coincided with the common <110> direction. The laths were of two distinctly different types, characterized by different cross-sectional shapes. Type I laths had a rectangular cross-section with interfaces along low-index planes, while Type II laths had a skewed cross-sectional shape with a major interface that was inclined about 13° to the Type I precipitate [2].

Fig. 2 shows a typical distribution of precipitates viewed along their lath axis $\mathbf{a}_3$. Here the two types of lath are easily distinguished, through the 13° inclination angle of type II precipitates which is clearly apparent. The corresponding selected area diffraction patterns (SADP) taken along the $\mathbf{a}_3$ zone axis, also exhibit a systematic difference, albeit more subtle. As seen by comparing the two SADP's in figure 3, corresponding low-index diffraction vectors are in exact alignment for type I precipitates (a), but are rotated about 2° relative to each other for type II precipitates (b). The sense of this rotation was found to depend on the sense of the interface inclination.

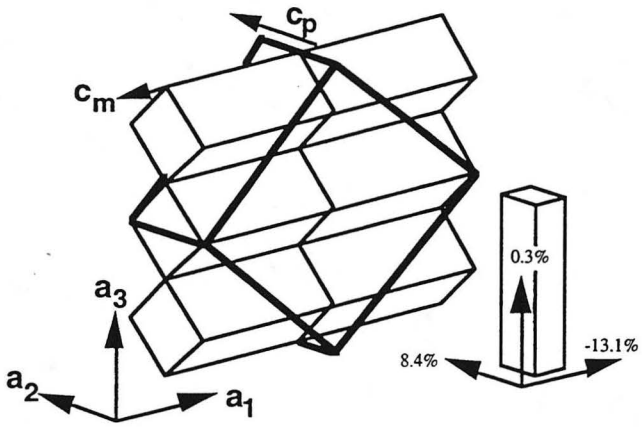

FIG. 1: Lattice correspondence showing one unit cell of the precipitate lattice inscribed in six unit cells of the precipitate lattice. The inset schematic of a type I precipitate shows its shape to be a rectangular box with dimensions roughly inverse to the principal strains.

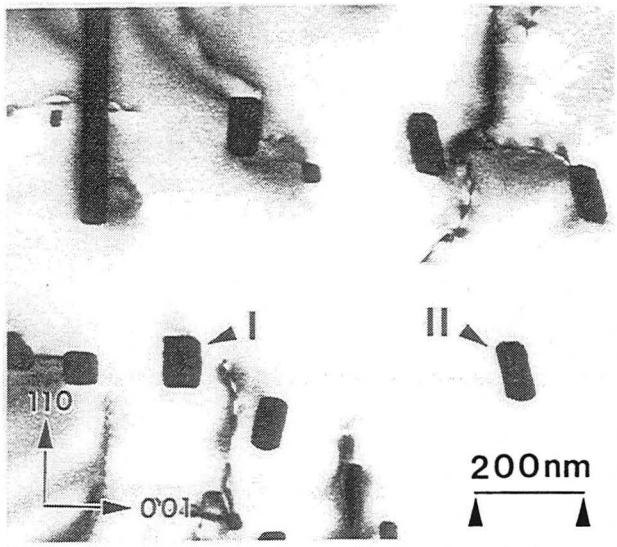

FIG. 2: End-on view along $\mathbf{a}_3$ of the two different types of lath, marked I and II. The major interface of type II laths is inclined by ~13° with respect to type I laths. Note that both clockwise and anticlockwise rotations are observed.

In many two-phase alloy systems, it has been found that irrational orientation relationships result when the habit plane contains an invariant line [3,4]. Consequently, it was hypothesized that the observed lattice rotation and interface inclination were the result of an invariant line transformation strain. A simple test for an invariant line strain can be performed on an electron diffraction pattern such as those shown in figure 3. The reciprocal lattice of an invariant line strain also undergoes an invariant line transformation. One result of this relationship is that for a zone axis pattern that contains the invariant line direction, the spot splitting (the difference vectors $\Delta\mathbf{g}$ between corresponding diffraction vectors) lies in a single direction, normal to the invariant line [5,6]. Thus, it suffices to check whether all $\Delta\mathbf{g}$ vectors in figure 3b lie in a single direction. Figure 3c and 3d show the same pattern of a type II precipitate, marked in two different ways. In (c), the $\Delta\mathbf{g}$ vectors are drawn according to the lattice correspondence of figure 1 and can be seen to vary in direction. This would lead to the conclusion that the transformation is not an invariant line strain. However, if the $\Delta\mathbf{g}$ vectors are drawn as in (d), they are indeed aligned along a single direction, as required for an invariant line transformation. In further support of the hypothesis, it was found that this direction was precisely perpendicular to the 13° inclined interface. It can thus be concluded that the inclined interface contains an invariant line, i.e. a line that is overall strain-free.

The difference between the two ways to determine the $\Delta\mathbf{g}$ vectors is in the underlying lattice correspondence. The correspondence taken in figure 3c is that illustrated in figure 1. An alternative lattice correspondence has been taken in figure 3d by connecting different diffraction vectors of the matrix and precipitate. This correspondence is illustrated in figure 4. Comparison with figure 1 shows that the $\mathbf{a}_2$ and $\mathbf{a}_3$ axes remain unchanged whereas the c-direction of the matrix now corresponds to the $1/2[11\bar{1}]$ direction of the precipitate lattice. For this transformation $\mathbf{A}$, the solution of the eigenvector equation

$$\mathbf{RAx} = \mathbf{x}$$

gives a calculated angle for the invariant line direction ($\mathbf{x}$) at 13.7° and an associated lattice rotation ($\mathbf{R}$) of 1.83°, in agreement with the experimental observation of ~13° and 2°.

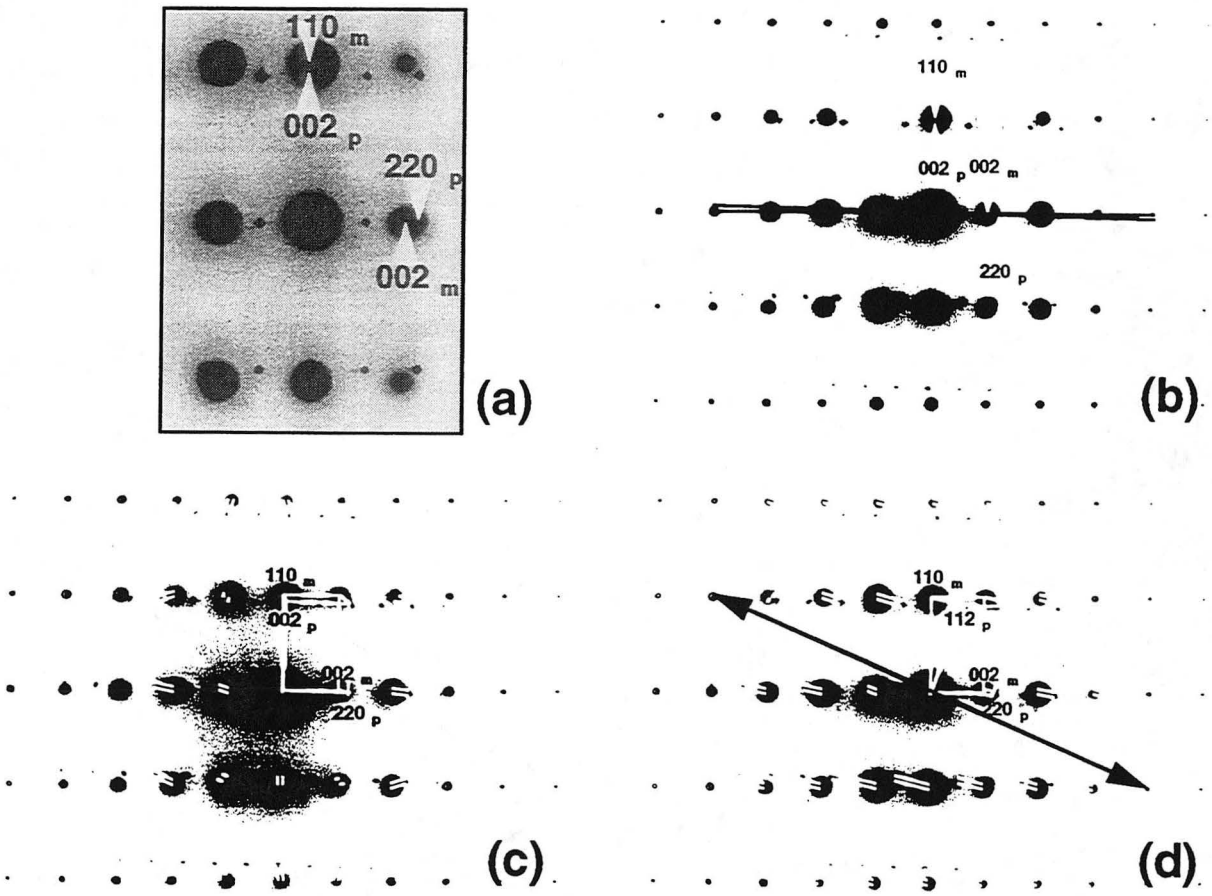

FIG. 3: Composite SADP's with the beam direction along the $\mathbf{a}_3$ *lath axis showing the orientation relationship of type I precipitates in (a) and the 2° lattice rotation characteristic for type II precipitates in (b,c,d). The difference vectors* $\Delta\mathbf{g}$ *drawn between corresponding diffraction vectors for the type II orientation relationship are seen to vary in direction (c), but are aligned in a single direction in (d).*

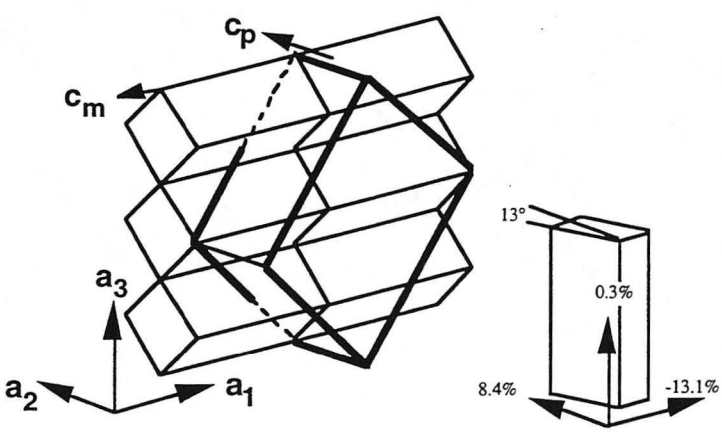

FIG. 4 Alternative lattice correspondence in which the c-axis in the matrix lattice transforms to a body centering translation in the precipitate lattice (heavily outlined). Compared to the lattice correspondence in figure 1, the precipitate lattice is sheared along its c-axis. In this correspondence the 13° inclined interface of type II precipitates (shown schematically with major orthogonal strains) contains an invariant line.

The HREM micrographs in figure 5 were recorded along the same end-on viewing direction as figure 2, and clearly reveal the difference in structure between the two types of lath. Both interfaces are seen to be serrated on an atomic scale, due to an array of ledges, spaced about 3nm apart. For type I precipitates (a) the ledges alternate in direction whereas for type II precipitates (b) they step in the same direction. It has been shown elsewhere [2] that each ledge is associated with a partial lattice dislocation of edge character, and that the ledge and the dislocation generate equal and opposite faults. For the type II precipitates, the difference in interplanar spacing at each ledge accumulates and leads to the 1.8° lattice rotation, identical to that required for an invariant line

interface. By analyzing the interface structure in detail it can be seen that the ledge spacing in the type I interface is given by the required spacing between partial misfit dislocations. Due to the small lattice rotation, the ledge spacing for the type II interface is slightly larger. Thus, for this interface, the structural ledge model [7] and the invariant line model [4,5] predict the same interface inclination and orientation relationship.

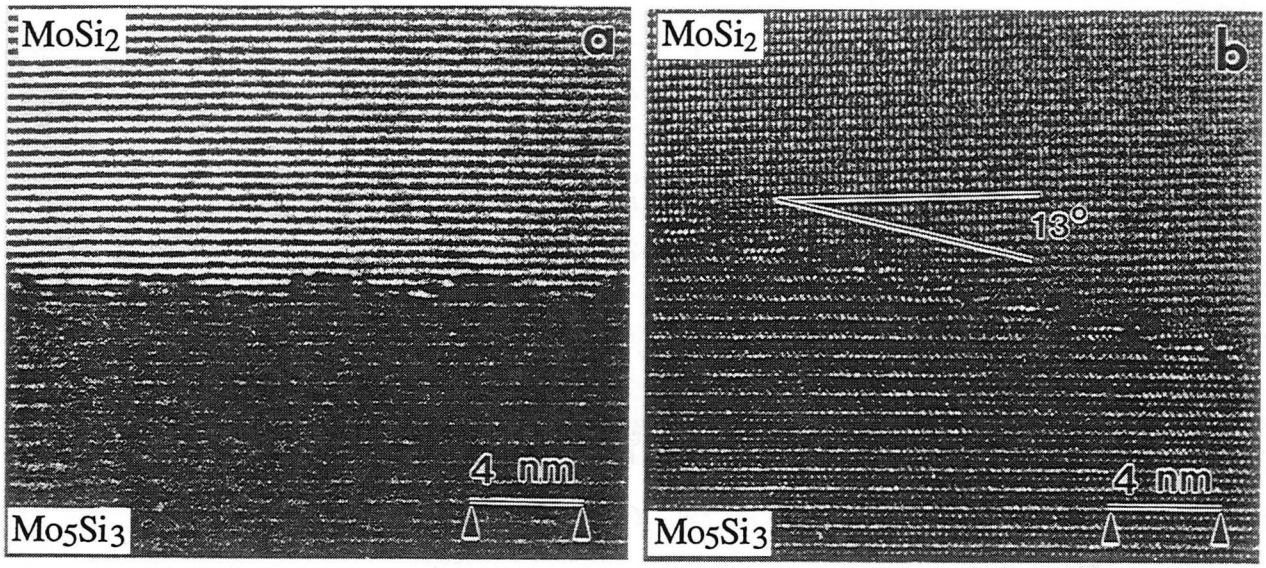

FIG. 5: HREM images showing ledge-and-terrace structure, with ledges alternating up and down for type I (a) and stepping in the same direction for type II precipitates (b). Each ledge is one matrix unit cell high and is associated with a partial dislocation.

Conclusion

Two different cross section shapes of Mo_5Si_3 precipitate laths in $MoSi_2$ are shown to be due to two different interface structures related to a small difference in orientation relationship. A simple analysis of the composite diffraction patterns shows that type II precipitates are consistent in orientation relationship and interface orientation with an invariant line transformation strain, if an alternative lattice correspondence is assumed. High resolution microscopy reveals both types of interfaces to contain structural ledges, differing only in their sequence and spacing. It is shown that the structural ledge and invariant line models make identical predictions, in agreement with experimental observations.

Acknowledgments

This work was supported by the Director, Office of Energy Research, Office of Basic Energy Sciences, Materials Science Division of the U.S. Department of Energy under contract No. DE-AC03-76SF00098. One of us (UD) acknowledges support from the CNRS during a research leave.

References:

1. S.A. Maloy, S.Q. Xiao, A.H. Heuer and J. Garrett, J. Mater. Res., **8**, 1079 (1993)
2. S.Q. Xiao, S.A. Maloy, A.H. Heuer and U. Dahmen, Phil. Mag. A, in press
3. J.W. Christian, Trans. Japan Inst. Metals, suppl. **17**, 21 (1976)
4. U. Dahmen, Acta Met. **30**, 63 (1982)
5. U. Dahmen, Ultramicroscopy **30**, 102 (1989), Metall. Trans. **25A**, 1857 (1994)
6. W.Z. Zhang and G.R. Purdy, Phil. Mag. **A 68**, 271 and 279 (1993)
7. M.G. Hall, H.I. Aaronson and K.R. Kinsman, Surface Sci. **31**, 257 (1972)

LAWRENCE BERKELEY LABORATORY
UNIVERSITY OF CALIFORNIA
TECHNICAL INFORMATION DEPARTMENT
BERKELEY, CALIFORNIA 94720