LBL-38278
UC-427

ERNEST ORLANDO LAWRENCE
BERKELEY NATIONAL LABORATORY

Methods of Beam Cooling

A. M. Sessler
Accelerator and Fusion Research Division

February 1996
Presented at the
31st Workshop: "Crystalline Beams and Related Issues," Erice, Italy,
November 11-21, 1995,
and to be published in
the Proceedings

LOAN COPY
Circulates
for 4 weeks
Bldg. 50 Library.
Copy 2
LBL-38278

LBL-38278
UC-414
CBP-168

Methods of Beam Cooling *

Andrew M. Sessler

Center for Beam Physics
Lawrence Berkeley Laboratory
University of California
Berkeley, California 94720

February 1996

* This work was supported by the Director, Office of Energy Research, Office of High Energy and Nuclear Physics, Division of High Energy Physics, of the U.S. Department of Energy under Contract No. DE-AC03-76SF00098.

Methods of Beam Cooling *

Andrew M. Sessler
Center for Beam Physics
Lawrence Berkeley Laboratory
Berkeley, California 94720

ABSTRACT

Diverse methods which are available for particle beam cooling are reviewed. They consist of some highly developed techniques such as radiation damping, electron cooling, stochastic cooling and the more recently developed, laser cooling. Methods which have been theoretically developed, but not yet achieved experimentally, are also reviewed. They consist of ionization cooling, laser cooling in three dimensions and stimulated radiation cooling.

Introduction

In particle beam physics, the concept of "cooling" has a different meaning than in the rest of physics. In, say, thermodynamics, "cooling" means the reduction of the material (gas, liquid, solid, plasma) temperature. In particle beam physics that is not adequate for "cooling". In particular, as one focuses and de-focuses beams, the transverse temperature can easily be changed. The "cooling" of particle beams is based upon the concept of phase space and a theorem first introduced by Liouville [1] (see Fig. 1).

Liouville's theorem states that in a conservative Hamiltonian system, such as a single particle in an external magnetic and electric field, the phase density of many non-interacting systems (having slightly different initial conditions) is preserved as one follows the motion of the system. Thus, this theorem is applicable to a beam of particles when the interaction between particles is negligible and can be ignored, which is often true — but not always true — for high energy beams.

Even within the restrictions of Liouville's theorem it is possible to arrange to interchange phase space (between, say, longitudinal and transverse degrees of freedom). Of course, other Hamiltonian requirements, summarized in the requirement that the transformation be symplectic, greatly restricts this process. Sometimes, although it is not possible, or convenient, to exchange phase space, it is possible to introduce correlations between the degrees of freedom.

---

* Work supported by the Director, Office of Energy Research, Office of High Energy and Nuclear Physics, Division of High Energy Physics of the U. S. Department of Energy, under Contract No. DE-AC03-76SF00098.

Reprinted with permission of Springer-Verlag, New York, Berlin, Heidelberg, 1990.

Figure 1 : Joseph Liouville, (1809 - 1882)

A proof of Liouville's theorem can be found in many text books [2]. A simple way of looking at this theorem is to think of it as equivalent to the condition of incompressible flow in the phase space of a given system. Let the system be described by the N coordinates q_α and the N conjugate nomenta p_α, $\alpha=1,2,\ldots,N$. The phase space is just the 2N-dimensional space with coordinates q_α and p_α, and the development in time of the state of the system is represented by the trajectory of a single point in phase space. Just as with fluid flow, there is a well-defined velocity field at each instant of time, which assigns to each point in phase space a definite velocity, with components q_α and p_α given as functions of the q's and p's by Hamilton's equations. For fluid flow in any number of dimensions the condition that volumes are preserved by the flow is equivalent to the vanishing of the divergence of the velocity field:

$$\nabla \cdot \mathbf{v}(x) = 0 \ . \tag{1}$$

For phase space the components of the velocity field are

$$\dot{q}_\alpha = v_\alpha(q,p,t) = \partial H / \partial p_\alpha \ , \tag{2}$$

$$\dot{p}_\alpha = F_\alpha(q, p, t) = -\partial H / \partial q_\alpha \ , \tag{3}$$

The divergence condition (1) then becomes

$$\Sigma_\alpha (\partial v_\alpha / \partial q_\alpha + \partial F_\alpha / \partial p_\alpha) = \Sigma_\alpha (\partial^2 H / \partial p_\alpha \partial q_\alpha - \partial^2 H / \partial q_\alpha \partial p_\alpha) = 0 \ , \tag{4}$$

which is automatically satisfied as a consequence of Hamilton's equations, and thus demonstrates the validity of Liouville's theorem. It is important to note that the Hamiltonian may depend explicitly on the time t.

Often a dynamical system is represented by an ensemble of possible states, with a distribution function f giving the number $n\Delta V$ of particles systems in a small volume ΔV of phase space:

$$n\Delta V = f(q, p, t)\Delta V \ . \tag{5}$$

If the q_i and p_i are Hamiltonian variables, then ΔV is conserved, and since the number of particles is clearly invariant, we deduce that moving with the particles (or set of systems) the density function f is constant:

$$\frac{df}{dt} = 0 \ . \tag{6}$$

Note that we can apply Liouville's theorem to an ensemble of non-interacting particles, but not to an ensemble of interacting particles.

However if one has a conservative fluid then Liouville's theorem exactly applies, as was shown in Ref. [3]. To a collection of particles interacting through their self-generated electric and magnetic fields Liouville's theorem again applies. (It doesn't work when "hard scattering" - - non-fluid-like behavior is included.)

It is, then, in the context of Liouville's theorem that "cooling" is defined. It means an actual reduction of phase space volume; that is, an increase in phase space density. This can only be achieved by violating the assumptions behind Liouville's theorem. Generally, this is not easy, but, nevertheless, a number of effective cooling methods have been devised. We review them in this paper. For each of the methods, we leave to the reader the task of determining how Liouville's theorem for a continuous conservative medium is circumvented.

Radiation Cooling

The radiation of accelerating electrons has been known since the last century, but it was only in 1956 that Kolomenski and Lebedev [4] realized that the radiation reaction has a damping effect upon the emitting electron.

The radiation of an electron moving in a circular accelerator is well-known. The power emitted is:

$$P = \frac{2}{3}\frac{e^2\beta^4\gamma^4 c}{R^2} , \tag{7}$$

where e is the electron charge, β is the electron speed divided by c, c the speed of light, γ the relativistic factor, and R the radius of the circular orbit.

Hence the radiated energy per turn is

$$\delta E = \frac{4}{3}\frac{\pi e^2}{R}\beta^3\gamma^4 , \tag{8}$$

or, in practical units (and taking β=1):

$$(\delta E)(\mathrm{MeV}) = 8.85 \ \mathrm{x} \ 10^{-2}\frac{E^4(\mathrm{GeV})}{R(\mathrm{m})} . \tag{9}$$

The frequency spectrum of the radiation is complicated; for low frequencies it varies as $\omega^{2/3}$. The radiation drops off exponentially for ω larger than a critical frequency, ω_c, where

$$\omega_c = \frac{3\gamma^3 c}{R} . \tag{10}$$

Note that this frequency varies as γ^3 times the revolution frequency. Thus the radiation can extend up to very high frequencies.

The emission of radiation has an effect on the radiation particle [4-6]. The radiation reaction can cause either damping or undamping of the electrons' oscillations (transversely and in energy) about the equilibrium orbit. If we characterize this exponential damping rate by rate constants $\alpha_x, \alpha_y, \alpha_E$ then

$$\alpha_i \begin{pmatrix} x \\ y \\ E \end{pmatrix} = \frac{c\gamma^3 e^2 J_i}{3R^2 mc^2} , \tag{11}$$

where the subscript i stands for x, y or E, and m is the electron mass.

The damping partition numbers satisfy:

$$J_y = 1, J_x + J_E = 3 . \tag{12}$$

One can arrange by proper lattice design, as one must in a storage ring, to have damping in all three directions.

Thus, on the basis of the above analysis, an electron beam in a storage ring will just damp and damp so that its transverse size becomes smaller and smaller. This is approximately true, and beams become very small indeed, but they do not become arbitrarily small. Why not? Because quantum effects need to be taken into account; i.e. that electrons radiate discrete photons and that the hard photons, which are radiated statistically, kick the electron. In fact, the size of electron beams at equilibrium is determined by these quantum mechanical effects. The energy spread σ_E of the beam, which also damps to zero classically, is (in a uniform field),

$$\left(\frac{\sigma_E}{E}\right)^2 = \left(\frac{55}{32\sqrt{3}}\right)\left(\frac{\hbar}{mc}\right)\frac{\gamma^2}{J_E R} , \tag{13}$$

and one can see that the finiteness of σ_E is due to a quantum mechanical effect; i.e. to the non-zero nature of Planck's constant $\hbar$.

For transverse motion we have for the normalized emittances

$$\varepsilon_{ny} \geq \left(\frac{55}{32\sqrt{3}}\right)\left(\frac{\hbar}{mc}\right)\frac{\gamma}{2\sqrt{n}} , \tag{14}$$

$$\varepsilon_{nx} \geq \left(\frac{55}{32\sqrt{3}}\right)\left(\frac{\hbar}{mc}\right)\left[\frac{(1-2n)^2}{n(1-n)}\right]\gamma^3 , \tag{15}$$

for field gradient $0<n<3/4$, where the formulas have been given for a constant gradient, weak focusing machine.

Recently some insight into the process of radiation damping was provided through an analysis, by Huang, Chen and Ruth, who considered radiation

damping in a uniform focusing channel [7]. Their analysis is quantum mechanical, but need not be. They show that an electron introduced into such a channel will experience damping of its transverse betatron oscillations at a rate

$$\alpha = -\tfrac{2}{3}\frac{r_e k}{mc} \quad , \tag{16}$$

where r_e is the classical electron radius and k is the focusing strength of the channel ($V(x)=kx^2/2$). The rate of damping is very slow (no γ^3 in Eq. 16!) but, there is no quantum excitation from photon recoil as there is for motion in a circular orbit. This is because there is no continual, forced, emission of photons. Consequently, the final emittance reached is only determined by uncertainty in the lowest state of an oscillator and can be derived, easily, from the fact that $E \geq \hbar\omega/2$. Thus,

$$\varepsilon_n \geq \hbar / 2mc = \lambda c / 2 \quad , \tag{17}$$

where λ_c is the Compton wavelength and ε_n is the normalized emittance.

The contrast between Eq. (17), and Eqs. (14 & 15) are most dramatic (γ dependence !) and very significant in practice (since damping rings usually have $\gamma \sim 2\text{x}10^3$).

Electron Cooling

Electron cooling was first suggested by Budker [8] (see Fig. 2). A good discussion may be found in Ref. 9.

$$\tau_e = \frac{C}{L_e}\frac{F_1\gamma^2}{r_e r_i n_e c \ln\Lambda}\left[\left(\frac{k_B T_{be}}{m_e c^2}\right)^{3/2} + \left(\frac{k_B T_{bi}}{m_i c^2}\right)^{3/2}\right] . \tag{18}$$

Here n_e is the electron density, assumed to be the same as the ion density n_i, r_e and r_i are the classical electron and ion radii. F_1 is a constant that for a smooth focusing system has the value $F_1 = 3/4\sqrt{2\pi} \approx 0.3$ and γ is the relativistic energy factor (identical for both beams); the electron and ion temperatures are measured in the beam frame. L_e / C is the fraction of the storage ring occupied by the cooling section, and $\ln\Lambda$ is the Coulomb logarithm. When equilibrium is reached, the two beam temperatures are the same (i.e., $T_{bi} = T_{be}$). Assuming that both beams have identical transverse cross sections, one obtains an emittance ratio of $\varepsilon_i/\varepsilon_e \approx (m_e/m_i)^{1/2}$ that is, the ion-beam emittance is considerably smaller than that of the electron beam.

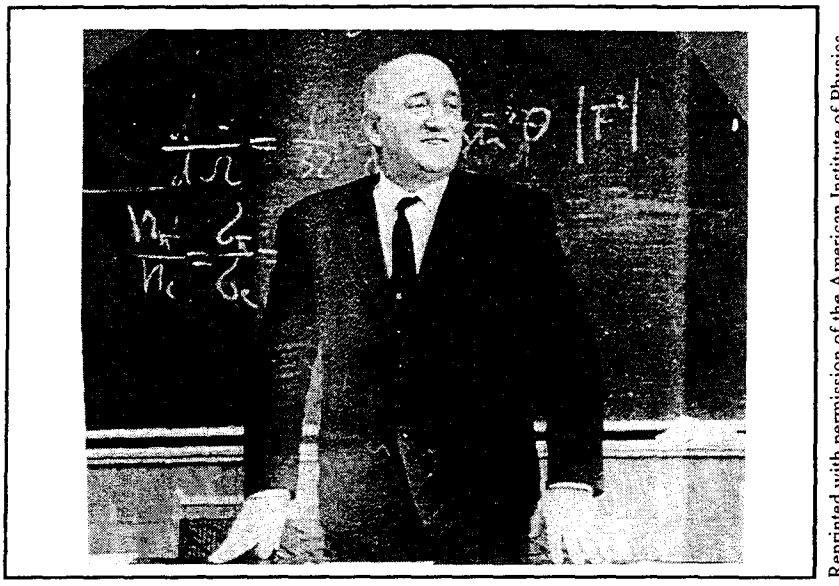

Reprinted with permission of the American Institute of Physics, p. [vi] of *The Development of Colliders*, 1995.

Figure 2 : Gersh I. Budker, (1918 - 1977)

Stochastic Cooling

The idea of stochastic cooling is due to Simon van der Meer [9] (see Fig. 3). The article by Bisognano presents a comprehensive treatment of the subject [10]. At the most elementary level, a pick-up takes a signal from a section of beam, amplifies it and sends it across the diameter of an accelerator so as to put an appropriate signal upon a beam kicker just as the same section of beam arrives on its circular route.

Suppose there are N particles in the ring and that $f = 1/T$ is the revolution frequency, and that W is the bandwidth of the electronics. Then the pick-up "sees" a number of particles

$$n \equiv \frac{N}{2WT} \quad . \tag{19}$$

Under influence of pick-up and kicker the betatron amplitude of oscillation becomes

$$x_i \rightarrow x_i - g\sum_{j=1}^{n} x_j \quad , \tag{20}$$

where g is the effective gain of the system.

$$\Delta\left(x_i^2\right) \equiv \left(x_i - g\sum_{j=1}^{n} x_j\right)^2 - x_i^2 \quad , \tag{21}$$

$$\Delta x_i^2 = -2gx_i\left(\sum_{j=1}^{n} x_j\right) + g^2\sum_{j=1}^{n}\sum_{k=1}^{n} x_j \cdot x_k \quad . \tag{22}$$

Initially there are no correlations so

$$\left\langle \Delta x_i^2 \right\rangle = -2g\left\langle x_i^2 \right\rangle + ng^2\left\langle x_i^2 \right\rangle \quad . \tag{23}$$

Optimum cooling is obtained at g=1/n and there

$$\left\langle \Delta x_i^2 \right\rangle = -\frac{1}{n}\left\langle x_i^2 \right\rangle \ . \tag{24}$$

So the rate of damping of rms betatron amplitudes is :

$$\frac{1}{\tau} = \frac{1}{2}\,\frac{1}{2}\,\frac{1}{n}\,\frac{1}{T} = \frac{W}{2N} \quad .$$

x not x' damped — rms — happens once a turn

(25)

Reprinted with permission of CERN, 1995.

Figure 3 : Simon van der Meer, (Nobel Prize, 1984)

From this we see it is good to make W as big as possible and that it works best at small N.

If there is noise then

$$x_i \rightarrow x_i - g\left(\sum_{j=1}^{n} x_j + r\right) \quad .$$

amplifer noise expressed as apparent x - amplitude at the pick-up

(26)

Now

$$\frac{1}{\tau} = \frac{W}{2N\left[1 + \frac{\langle r^2 \rangle}{\langle x_i^2 \rangle}\right]} \quad .$$

$$\left(\frac{\text{noise power}}{\text{signal power}}\right)$$

(27)

Thus we see that amplifier noise only slows things down, doesn't stop cooling at some effective temperature (of course some — less important sources of noise — do introduce a temperature limit).

There have been efforts to raise the typical frequency employed in stochastic cooling (~ 5 GHz) to much higher frequencies (~ 90 GHz). This work, so far, has only been theoretical. Recently, there have been proposals by Mikhailichenko and Zolotoev and Zolotorev and Zholents to extend operation into the optical range [11,12]. For this purpose it is proposed to use wigglers for the pick-ups and kickers while wide-band lasers are employed as amplifiers. Experimental work on these ideas is being initiated, as well as theoretical analysis taking into account 3-D effects [13].

Laser Cooling

The cooling of not-fully-ionized ions by means of Doppler laser cooling was first introduced in 1975 by a number of atomic physicists [14]. It was applied to beams of ions in a storage ring by groups in Heideberg, Germany and Aarhus, Denmark [15]. A rather comprehensive treatment can be found in the thesis of J. Hangst [16].

Laser cooling is the result of velocity-selective transfer of photon momentum from a laser beam to a moving ion. In the most basic laser cooling scheme,

known as Doppler cooling, particles have a closed transition (i.e. the population is confined to two levels) between internal energy levels. Those particles which are in resonance with a laser beam absorb photons. Each absorbed photon transfers momentum of magnitude $h\nu / c$ to the particle, which recoils in the direction of the laser beam propagation. When a photon is spontaneously emitted by the excited particle, the particle again recoils, but the average momentum transfer to a particle after many spontaneous emissions is negligible, because the angular distribution of the emission is symmetric. There is thus a net radiation pressure force, directed along the laser beam, on resonant particles. The process is shown in Fig. 4. Due to the small magnitude of the photon momentum (optical photons have at most a few eV/c), it is necessary for an ion to absorb many photons to achieve macroscopically significant acceleration. It is for this reason that the optical transition must be closed. The force is dependent on the velocity of the particle, by virtue of the Doppler shift. By tuning the frequencies of two counter-propagating lasers to accelerate slow particles and decelerates fast ones, it is possible to reduce the velocity spread (in one dimension) of a collection of particles; hence the name "cooling".

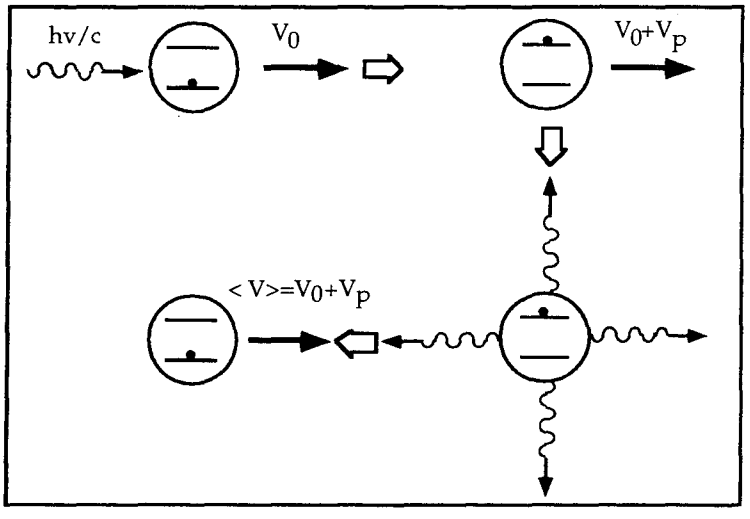

Figure 4 : The principle of laser cooling. The net effect of photon absorption and emissions is that the ion has a change in velocity.

The minimum temperature T_{min} achievable by Doppler cooling is given as

$$k_B T_{min} = \frac{\hbar\Gamma}{2} \quad , \tag{28}$$

where k_B is the Boltzmann constant, and Γ is the spontaneous decay rate of the upper level back to the lower level; $\Gamma/2$ is the radiative linewidth of the transition. The maximum laser cooling force

$$F_{LC}^{max} = \left(\frac{\Delta p}{\Delta t}\right)_{max} = \frac{\hbar k_0 \Gamma}{2} \quad , \tag{29}$$

where k_0 is the wave number.

In a storage ring, laser cooling is sometimes achieved using two laser beams, overlapping the ion beam for up to a few meters in the machine. One laser propagates opposite to the ions' direction of travel and can decelerate particles with velocities above the mean. The second laser is co-propagating and acts to accelerate slow particles. The initial energy spread in a stored beam is usually much higher than the linewidth of the cooling transition. The lasers must then be tunable over a wide frequency range in order to interact with all of the ions.

There are at least four different ways in which to achieve laser cooling, all of which have been used in practice. That is, it is not necessary to employ two laser beams if: (1) one laser can be swept in frequency, or an auxiliary force is employed which is (2) constant, (3) varies linearly, or (4) is produced by an RF bucket. Of course, much theoretical work, employing the Fokker-Planck equation, etc. has been done on this subject. The essence of the laser cooling, however, has been described here.

Physicists who do laser cooling generally work with the concept of temperature. In terms of particle velocities the longitudinal temperature, $T_{\parallel}$, and the transverse temperature, $T_{\perp}$, are given by

$$\frac{1}{2} k_B T_{\parallel} = \frac{1}{2} m \left(\delta v_{\parallel}\right)^2 \quad , \tag{30}$$

$$k_B T_{\perp} = \frac{1}{2} m \left(v_x^2 + v_y^2\right) \quad , \tag{31}$$

where k_B is Boltzman's constant.

For particle beams these are not very good quantities as they are not invariants as one moves about the storage ring. In practical units

$$T_{\parallel}(^\circ K) = 2.32 \times 10^4 \left(\frac{\delta p}{p_0}\right) E_0 [eV] \quad , \tag{32}$$

$$T_{\perp}(^{\circ}K) = 2.32\text{x}10^{4}\,\frac{\varepsilon_{\perp}[m-rad]}{\langle\beta\rangle[m]}E_0[eV] \quad , \tag{33}$$

where E_0 is the kinetic energy of the reference particle, $\varepsilon_{\perp}$ is the transverse beam emittance, and $\langle\beta\rangle$ denotes the averaged value of the betatron function.

Experimental achievements have been $T_{\parallel} \sim 1\text{m}^{\circ}\text{K}$ for $^{7}Li^{+}$ and $^{24}Mg^{+}$ ions at 100 keV, and $T_{\parallel} \sim 30\text{m}^{\circ}\text{K}$ for $^{7}Be^{+}$ at 7.3 MeV. The achievements correspond to $\Delta p/p \sim 4\text{x}10^{-7}$ (to be contrasted with $\Delta p/p \sim 4\text{x}10^{-5}$ from electron cooling prior to the laser being used). Unfortunately, laser cooling is only effective in the longitudinal direction, and in these mK-experiments the transverse temperature remained at the 1000°K value (to which it had been brought by electron cooling).

Ionization Cooling

There are three methods of cooling, which are reviewed here, which have not yet been achieved experimentally, but have been subject to detailed theoretical analysis. Ionization cooling is special to muons, but is the basis of much recent work on Muon-Muon Colliders; it is the first of the three methods which we review. The possibility was first put forward by Sasha Skrinsky [17] and analyzed, in considerable detail, by Neuffer [18].

The concept is quite simple: muons passing through a material medium lose energy (and momentum) through ionization interaction. The losses are parallel to the particle motion, and therefore include transverse and longitudinal momentum losses; the transverse energy loses reduce (normalized) emittance. Re-acceleration of the beam (in rf cavities) restores only longitudinal energy. The combined process of ionization energy loss plus rf re-acceleration reduces transverse momentum and hence reduces transverse emittance. However, the random process of multiple scattering in the material medium increases the emittance. There can also be longitudinal cooling, under proper circumstances, as we discuss below. The equation for transverse cooling can be written in a differential-equation form as:

$$\frac{d\varepsilon_{\perp}}{dz} = -\frac{\frac{dE_{\mu}}{dz}}{E_{\mu}}E_{\perp} + \frac{\beta_0}{2}\frac{d\langle\theta^2_{rms}\rangle}{dz} \quad , \tag{34}$$

where $\varepsilon_{\perp}$ is the (unnormalized) transverse emittance, dE_{μ}/dz is the absorber energy loss per cooler transport length z, β_0 is the betatron function in the absorber and θ_{rms} is the mean accumulated multiple scattering angle in the absorber. Note that $dE_{\mu}/dz = f_A\, dE_{\mu}/ds$ where f_A is the fraction of the transport length occupied by the absorber, which has an energy absorption coefficient of dE_{μ}/ds. Also the multiple scattering can be estimated from:

$$\frac{d\left\langle \theta_{rms}^2 \right\rangle}{dz} \cong \frac{f_A}{L_R}\left(\frac{0.014}{E_\mu}\right)^2 \quad , \tag{35}$$

where L_R is the material radiation length and E_μ is in GeV. (The differential-equation form assumes the cooling system is formed from small alternation absorber and reaccelerator section; a similar difference equation would be appropriate if individual sections are long).

If the parameters are constant, the equations may be combined to find a minimum cooled (unnormalized) emittance of

$$\varepsilon_\perp \rightarrow \frac{(0.014)^2}{2E_\mu}\frac{\beta_0}{L_R\frac{dE_\mu}{dz}} \quad , \tag{36}$$

or, when normalized

$$\varepsilon_N = \varepsilon_\perp \gamma \Rightarrow \frac{(0.014)^2}{2m_\mu c^2}\frac{\beta_0}{L_R\frac{dE_\mu}{dz}} \quad . \tag{37}$$

Longitudinal (energy-spread) cooling is also possible, if the energy loss increases with increasing energy. The energy loss function for muons, dE/ds, is rapidly decreasing (heating) with energy for $E_\mu < 0.3$ GeV, but is slightly increasing (cooling) for $E_\mu > 0.3$ GeV. This natural dependence can be enhanced by placing a wedge-shaped absorber at "non-zero dispersion" region where position is energy-dependent. Longitudinal cooling is limited by statistical fluctuations in the number and energy loss of muons (Landau straggling).

Muon colliders, using ionization cooling must observe the limit of Eq. (37) (and the corresponding limit on energy spread), but, nevertheless, appear to have an adequately small beam size to create an interesting luminosity.

Laser Cooling in Three Dimensions

As we saw earlier, laser Doppler cooling only works in the longituindal direction, but there it works very well indeed. At high temperature, intra-beam scattering will cause the transverse temperature to stay close to the longitudinal temperature and, therefore, laser cooling will cool in all three directions. As the temperature is reduced, however, intra-beam scattering becomes greatly reduced

and laser cooling (given the finite lifetime of beams due to residual gas scattering) only works in the longitudinal direction.

Transverse laser illumination is not practical (the overlap with the particle beam is not adequate). The idea of a coupling cavity, or of an rf cavity operating in a location where there is dispersion, has recently been introduced [19].

Considering a coupling cavity as a cavity operating in the TM_{210} mode, and forming a Hamiltonian for the system which consists of an rf banding cavity (i.e., a normal rf cavity) and a linear lattice, one arrives at the equations of motion

$$\frac{d^2x}{d\theta^2} + \nu_x^2 x = 2\pi\Gamma_c \psi \delta_p(\theta - \theta_c) \quad , \tag{38}$$

$$\frac{d^2x}{d\theta^2} + 2\pi\nu_L^2 \psi \delta_p(\theta - \theta_b) = -2\pi\xi_0 \Gamma_c x \delta_p(\theta - \theta_c) \quad , \tag{39}$$

where x is the radial extent of the particle, ψ is its phase with respect to the ordinary cavity, θ is measured about the circumference, θ_b and θ_c are the location of the bunching and the coupling cavities. The quantity $\zeta_0 = \gamma - 1/\gamma^2$ where γ is the relativistic factor. The transverse tune is ν_x and the longitudinal tune is close to ν_L (equal to ν_L if $\nu_L << 1$). The periodic delta functions are $\delta_p(\theta)$ and the degree of coupling is given by Γ_c. For a rectangular cavity (surely not used in practice)

$$\Gamma_c = \frac{eV_c}{2\beta_0 cp0}\left(\frac{R}{a}\right) \quad , \tag{40}$$

where R is the radius of the machine, 2a is the transverse size of the cavity having voltage V_c. The particle momentum $p_0 = \beta_0\gamma_0 mc$.

It is simple to solve, by matrix methods, Eqs. 38 and 39, after introducing a laser frictional force within a small region. One finds that if the coupling condition $\nu_x - \nu_L$ = integer is satisfied, then the damping rate per turn is:

$$\mathrm{Im}(\nu) = -\frac{1}{2}\mathrm{In}\left[1 + \frac{(2\pi)^3 \xi_0 \Gamma_c{}^2}{2\nu_x}\right]\coth\left(\frac{\Lambda_D}{2}\right) \quad , \tag{41}$$

$$\mathrm{Im}(\nu) \approx \frac{\Lambda_D}{2} + \frac{1}{2}\mathrm{In}\left[1 + \frac{(2\pi)^3 \xi_0 \Gamma_c{}^2}{2\nu_x}\right]\coth\left(\frac{\Lambda_D}{2}\right) \quad , \tag{42}$$

where $\frac{\Lambda_D}{2}$ is the laser damping per turn if there is no coupling.

It is easy to see that if the coupling, Γ_c, is zero then only the longitudinal motion is damped, but at large Γ_c the two damping rate become equal. Provided $\Gamma_c > \Gamma_{co}$ where

$$\Gamma_{co} = \frac{\Lambda_D}{4\pi^{1/2}}\left(\frac{\nu_x}{-\xi_0}\right)^{1/2} , \tag{43}$$

then essentially x and ψ are damped at the same rate (about 1/2 the rate for damping just the longitudinal motion).

With a skew quadrupole the vertical motion may also be damped. Ordinary rf cavities in regions of dispersion also can be used to couple motion. Much theoretical work with tracking of particles and study of how much one can be off resonance (a good bit) has been done, but no experimental work has yet been initiated.

Stimulated Radiation Cooling

Recently it has been proposed by Bessonov, and analyzed in detail by Bessonov and Kim [20], that one can stimulate non-fully-ionized ion beams and, thus, have effective radiation damping in circumstances where natural radiation of heavy ions is negligible. Essentially the bound electron is caused to radiate (transfer from one bound level to another) by means of a laser whose frequency is close to resonance. The laser beam itself acts as a "wiggler" in the radiation process.

If the laser, of wavelength λ in the laboratory, is exactly on resonance, then the cross-section is $\sigma = (2\gamma\lambda)^2 / 4\pi$, (Doppler shifted into ion frame), while off resonance it is $\sigma = \left(\frac{8}{3}\pi\right) r_e^{\,2}$ and (typically) 18 orders of magnitude smaller. The laser cannot, however, due to the temperature of the beam and the resulting Doppler shifts, be on resonance for all ions. In light of the many orders of magnitude, it is possible to have a broad band laser, of width $\Delta\omega$, so that the average cross-section

$$\sigma = \left(\frac{8}{3}\pi\right)\left(\frac{2\gamma\lambda}{r_e}\right)\left(\frac{\omega}{\Delta\omega}\right) r_e^{\,2} , \tag{44}$$

is still large enough to be used for beam cooling.

Note that in this process, as contrasted with laser cooling, an rf cavity is essential and the laser is very broad band. Unlike laser cooling, which only changes the ion energy by a small amount, here, in order to get damping by n e-foldings it is required to change the ion energy by $n\left(\gamma M_i c^2\right)$ Thus, as in ordinary radiative cooling, the rf cavity and energy replacement, are essential ingredients. On the other hand, as in laser cooling, it is the electron transition, and the transfer of momentum to the ion, which is basic to the mechanism.

The damping rate for vertical oscillations (similar formulas can be obtained for each degree of freedom) is (approximately):

$$\tau = \frac{SR}{c\lambda\ell\gamma}\left(\frac{\Delta\omega}{\omega}\right)\frac{P_A}{P} \quad , \tag{45}$$

where S is the cross-section of the laser beam, of frequency ω and spread $\Delta\omega$, and power P, R is the radius of the storage ring, ℓ is the length of the interaction region, and $P_A = m_e m_i c^5/e^2$. In a numerical example the transverse damping time, for a nitrogen like xenon ion beam at $\gamma = 97$, is 411 seconds.

Conclusion

We have seen that there are a number of ways to circumvent Louville's theorem. Attempts to do so were initiated by the MURA Group in 1956, but with no success. Physicists knew about radiation of electrons, but the MURA Group was interested in proton damping. The radiation damping of electrons was quickly developed, but it wasn't until ten years later that Budker with electron cooling, and then van der Meer, with stochastic cooling, devised effective methods to circumvent the theorem and, thus, damp protons and anti-protons.

In the last decades, the methods of Budker and of van der Meer have been greatly refined. Also, a number of new methods have been proposed, and one has even been demonstrated experimentally. The most effect (in terms of the lower temperature achieved) is the new method of laser cooling.

It is interesting to note that special cooling methods have been developed for different species. Thus radiation cooling works for electrons, stimulated radiation cooling works for relativistic non-fully ionized ions, laser cooling works on non-relativistic non-fully ionized ions, and ionization cooling works for mu mesons.

In the future, we may expect even colder beams useful, for a diversity of purposes, from collider applications to the achievement of crystalline beams.

Acknowledgments

This being a review paper the author has drawn freely on his earlier papers as well as upon the references cited. The section on Ionization Cooling follows closely the paper by D. Neuffer.

References

1. Liouville, J., Journ. de Math. 3, 349 (1838).
2. Goldstein, H. Classical Mechanics, Addison Wesley, Reading, MA (1980), p. 426;
   A. J. Lichtenberg, Phase Space Dyamics of Particles, Wiley, New York, (1969).
3. Mills, R. L. and A. M. Sessler, "Liouville's Theorem and Phase Space Cooling", Proceedings of the Workshop on Beam Cooling and Related Topics, Montreaux, CERN Report 94-03, 4 (1994).
4. Kolomenski, A. and A. Lebedev, "The Effect of Radiation on the Motion of Relativistic Electrons in Synchrotrons", CERN Symposium, 447 (1956).
5. Robinson, K., Phys. Rev. 111, 373 (1958); Sands, M. Phys. Rev. **97**, 470 (1955).
6. Sands. M., "The Physics of Electron Storage Ring, An Introduction", Stanford Linear Accelerator Center, SLAC 121 (1970).
7. Huang, Z., P. Chen, and R. Ruth, Phys. Rev. Lett. **74**, 1759 (1995).
8. Budker, G. I., Atomnaya Energiya **22**, 346 (1967).
9. van der Meer, S., "Stochastic Damping of Betatron Oscillations in the ISR", CERN Internal Report CERN/ISR-PO/72-31 (1972).
10. Bisognano, J. J., Proc. of the Inter. Conf. on High Energy Accelerators, 772, (1980).
11. Mikhailichenko, A., and M. Zolotorev, Phys. Rev. Lett, **71**, 4146, (1993).
12. Zolotorev, M., and M. Zholentz, "Femtosecond Pulses of Synchrotron Radiation", Lawrence Berkeley Laboratory, LBL #37556, (1995).
13. Kim, K.-J., "Analysis of Optical Stochastic Cooling", presented at PAC, (1995).
14. Wineland, D. J. and H. Dehmelt, Bull. Am. Phys. Soc. **20**, 637 (1975); T. Hanchand, A. Schawlow, Opt. Comm. **13**, 68 (1975).
15. Schroder, S., et al., Phys. Rev. Lett. **64**, 2901 (1990); J. S. Hangst, et al., Phys. Rev. Lett, **67**, 1238 (1991).
16. Hangst, J., "Laser Cooling of a Stored Ion Beam - A First Step Towards Crystalline Beam", Argonne National Laboratory Report ANL/PHY-93/1 (1993).
17. Skrinsky, A. N., Proc. XXth Int. Conf. on High Energy Physics, AIP Conf. Proc. **68**, 1056 (1980).
18. Neuffer, D., Part. Acc. **14**, 75 (1983).
19. Okamoto, H. , and A. M. Sessler, and D. Mohl, Phys. Rev. Lett. **72**, 3977, (1994).
20. Bessonov, E.G. and K.-J. Kim, *Phys. Rev. Lett*. **76**, 431, (1996).