0 0 0 0 4 5 0 5 8 2 4

Submitted to Journal of Electron Spectroscopy
and Related Phenomena

LBL-5127
Preprint c.1

GLOW DISCHARGE LAMPS AS ELECTRON SOURCES FOR ELECTRON IMPACT EXCITATION

S-T. Lee, R. A. Rosenberg, E. Matthias, and
D. A. Shirley

May 1976

Prepared for the U. S. Energy Research and
Development Administration under Contract W-7405-ENG-48

For Reference

Not to be taken from this room

LAWRENCE BERKELEY LABORATORY
UNIVERSITY OF CALIFORNIA • BERKELEY •

LBL-5127
c.1

DISCLAIMER

This document was prepared as an account of work sponsored by the United States Government. While this document is believed to contain correct information, neither the United States Government nor any agency thereof, nor the Regents of the University of California, nor any of their employees, makes any warranty, express or implied, or assumes any legal responsibility for the accuracy, completeness, or usefulness of any information, apparatus, product, or process disclosed, or represents that its use would not infringe privately owned rights. Reference herein to any specific commercial product, process, or service by its trade name, trademark, manufacturer, or otherwise, does not necessarily constitute or imply its endorsement, recommendation, or favoring by the United States Government or any agency thereof, or the Regents of the University of California. The views and opinions of authors expressed herein do not necessarily state or reflect those of the United States Government or any agency thereof or the Regents of the University of California.

0 0 0 0 4 5 0 5 8 2 5

GLOW DISCHARGE LAMPS AS ELECTRON SOURCES FOR ELECTRON IMPACT EXCITATION

S-T. Lee, R. A. Rosenberg, E. Matthias, and D. A. Shirley

Materials and Molecular Research Division
Lawrence Berkeley Laboratory
and
Department of Chemistry
University of California
Berkeley, California 94720

May 1976

ABSTRACT

It has been found possible to utilize the plasma in the discharge lamp of a conventional ultraviolet photoelectron spectrometer as an electron source for low-energy electron impact excitation. The $N_{4,5}OO$ Auger spectra of Xe, and $M_{4,5}NN$ Auger spectrum of Kr, and the autoionization electron spectra of K and Na vapor have been recorded with a Perkin-Elmer PS-18 photoelectron spectrometer. By comparing these spectra with those excited by filament electron guns the advantages and disadvantages of the two are illustrated. The characteristics of the discharge electron source were deduced, and some possible improvements in its performance are suggested. The autoionization electron spectrum of Na is analyzed by comparison with the data from photoabsorption and Na^+ - He collisions studies and the $L_1L_{2,3}M_1$ and $L_1L_{2,3}N_1$ Coster-Kronig transitions are identified by using equivalent-core approximations.

I. INTRODUCTION

Electron impact spectroscopy utilizes hot filament guns as source of electrons. The electrons generated in this way are quite monochromatic with an inherent energy spread of the order of the thermal energy (kT). Thus an electron beam of width less than 0.5 eV is readily obtainable. This bandwidth is important for electron loss impact studies in which a high flux of monochromatic electrons is required. However, in certain areas of electron impact studies in which the role of electrons is in excitation or ionization, it is not necessary for the electrons to be monochromatic. The ejected electron spectroscopy of autoionizing and Auger processes[1] falls in this latter category.

It is well known that the plasma of any gas discharge provides a copious source of electrons. The energy of the electrons in the plasma follows a Maxwellian distribution,[2] with a mean energy rarely exceeding one-third of the first ionization potential of the gas involved. These characteristics of the electron plasma have led to its use as a high flux electron gun in high pressure CO_2 lasers.[3,4] It seems possible that the electron plasma can be used as an electron source in ejected electron spectroscopy as well. We have found this to be the case, and in this paper, some preliminary results will be presented about the use of a cold cathode plasma electron gun in electron impact studies.

Ejected electron spectroscopy following electron impact detects electrons of discrete energies and, as a consequence, the monochromatic electrons can easily be distinguished from the abundant continuous background. Electrons ejected from autoionizing states or Auger

transitions satisfy this condition, and can therefore be detected and studied with broad-band electron sources. In Auger work, ionization by electrons rather than photons is frequently preferred because a higher flux of electrons is more readily obtainable and the energy of the exciting source can be varied at will to maximize cross sections. In the study of autoionization processes, excitation by (especially low energy) electron impact is employed to take further advantage of the less stringent selection rules. Consequently, autoionizing states may be observed corresponding to optically forbidden transitions.

Ejected electron spectra of several metal atomic vapors, excited by electron impact using filament emission, have recently been reported. The list includes the alkali metals Na,[5] K,[6] Rb,[7] and Cs,[8] and the Group II element Mg[9] and Cd.[10] The study of free atoms is fundamental and appealing, because direct comparison with theory is possible. There are two immediate complications involved in the study of metal vapors. Firstly, an oven is required to maintain the required vapor pressure. Secondly, the metal vapors are generally detrimental to the hot filaments. A special high-temperature oven developed in this laboratory[11] has enabled us to heat our samples up to ∿800°C. By employing a cold cathode plasma electron gun, we have circumvented the second complication. In this paper, we present spectra of Na and K obtained by utilizing this new method, and compare them with those obtained by a conventional electron gun.

II. EXPERIMENTAL

The experiments were carried out with a Perkin-Elmer PS-18 photoelectron spectrometer modified for high temperature work.[11,12]

Except for the operation of the discharge lamp, the spectrometer was used in exactly the same manner as for the measurement of photoelectron spectra.

The PS-18 spectrometer uses a D.C. high-voltage cold cathode capillary discharge for generating HeI or other atomic resonance radiation. The cross-sectional view of the lamp is shown in Fig. 1. The upper end of the capillary in the lamp is about 10cm below the entrance slit of the 127° cylindrical electron analyzer. When the lamp is operated to produce HeI radiation, a pressure of 200 - 500 microns is used. In this pressure range electrons from the discharge plasma cannot reach the entrance slit because of inelastic collisions. Maintaining this condition is mandatory in PES work, because electrons from the lamp can increase the noise level and lower the quality of the photoelectron spectra. In contrast, to operate the lamp as an electron gun, the plasma was intentionally diluted to increase the mean free path of the electrons and enable them to enter the ionization chamber. This was accomplished by lowering the pressure in the discharge while monitoring the background electron counts. By adjusting the pressure, an optimum condition for signal-to-background ratio, signal intensity and resolution in the ejected electron spectrum can usually be obtained. Depending upon the cleanliness and exact geometry of the lamp and the sample used, the helium lamp was found to operate as an electron gun in the pressure range of 25 - 150 microns, with a discharge current of ca. 50 ma.

For lamp pressures in an intermediate range, both the ejected electron and photoelectron spectra can be obtained simultaneously,

and the relative intensities of the two spectra can be varied with pressure. Thus the calibration of the ejected electron spectra can usually be accomplished by referring to the known energies of photoelectron signals of the samples. Where necessary, additional calibration gases such as Xe, Kr, N_2, etc. can also be used. The ejected electron spectra to be presented later were normally recorded with the photoelectron signals completely suppressed. In the following, we shall distinguish between low-pressure and high-pressure discharges as electron and photon modes of the lamp, respectively.

III. PERFORMANCE OF THE PLASMA ELECTRON GUN

The characteristics of the cold cathode plasma and its potential as a source for electron impact studies are exemplified by the following measurements, in which our spectra are compared to those obtained using hot filament electron guns.

A. Low Energy Auger Spectra of Xe and Kr

Fig. 2 shows the $N_{4,5}OO$ Auger spectra of Xe recorded using five different plasma discharges operated in the electron mode. In Fig. 3 the $M_{4,5}NN$ Auger spectrum of Kr obtained with the He lamp is displayed. Included for comparison in both figures are the corresponding spectra reported by Werme et al.,[13] who used a filament electron gun. The fact that identical electron spectra of Xe were obtained, irrespective of the gases in the lamps, is expected because only the electron plasmas are responsible for the excitation of the spectra. Among the five lamps tested (He, Ne, Ar, H_2, and N_2), the helium lamp was consistently more stable, and it gave spectra of better signal-to-background ratio. The superiority of the helium discharge may be generally attributed to

helium having the highest ionization potential and the lowest inelastic cross sections, among the five gases,[14] for electrons with energy in the range of 0 - 10^3 eV, which covers the energy distribution of the plasma electrons. Consequently, the helium lamp can be operated in the electron mode at the highest pressure,[15] while delivering the plasma with the largest neon energy.[1] For these reasons, the helium lamp was used for all subsequent studies.

Comparison of our results with the spectra obtained by Werme et al.[13] (Fig. 2 and 3) shows that they are almost identical in the positions and relative intensities of the Auger peaks. Furthermore, the strong autoionization electron peaks lying between 8 - 10 eV in the Xe spectrum of Werme et al. also are present in all the spectra obtained by plasma electrons. Naturally, the spectra obtained by normal electron gun are much superior in signal-to-background ratio. The higher background in our spectra is mainly due to poor focusing of the electron plasma and immense scattering of electrons from the ionization chamber. The signals are much stronger in the electron plasma spectra which was partially achieved at the expense of resolution. Still larger signals can usually be obtained by lowering the pressure or increasing the current of the lamp as long as the discharge is stabilized.

B. Electron Spectra of the Autoionizing States of K and Na

Fig. 4 depicts the autoionzation electron spectrum of K vapor at 220 ± 20°C. The kinetic energies of the observed peaks are set out in Table I, where the results of other workers are also included for comparison. The spectrum corresponds to the autoionizing states of K with a 3p-electron excited by electron impact. Similar spectra

have been reported recently[6] using electron beams of energy 500 and 29 eV. Most of the states detected in the electron spectra have also been observed in the 3p absorption spectrum of K.[16] Because of the lower resolution in the electron spectra, each electron line may actually correspond to several closely-spaced states observed optically, and in Table I only the prominent absorption peaks are listed along with the corresponding electron lines. The assignment of the individual autoionizing states have been discussed in detail by Mansfield.[16]

Our spectrum of K is remarkably similar in the energies of the observed peaks to the composite of the two spectra of Ottley and Ross,[6] excited by electron beams of 500 and 29 eV, respectively. The small difference in the number of peaks in previous and present spectra may be simply a consequence of a difference in energy resolution. The peaks numbered 4 - 8 in our spectra were observed to vary in intensities relative to the others in two separate runs, and in some spectra these peaks were hardly detectable. This intensity variation may be attributed to a difference in the energy distribution of the plasma as a result of a change in the condition of the lamp. This observation goes together with the fact that peaks 4 - 8 were detected with large intensities only following excitation by low energy electrons, and thus must be regarded as optically forbidden transitions.[6,16] The broad peak 1 has not been reported before, but appeared to be present in Fig. 1 of Ref. 6. We have found that the intensity of this peak to increase with the temperature of the oven, and thus it is tentatively assigned to potassium dimer, K_2. With the binding energy of K_2 at 4.0 eV,[17] the excitation energy of this autoionizing state is 17.9 eV.

The peaks labeled by I are the inelastic loss peaks of lines 2 and 3 corresponding to 4s → 4p excitation in K.

Fig. 5 shows the autoionizing electron spectrum of Na vapor at 270 ± 20°C and Table II lists the kinetic energies of the observed peaks. Core-excited autoionizing states in Na have been observed by photoabsorption[19,20] and projectile-electron spectroscopy.[21] The relevant results of these studies are also included in Table II for comparison. Except for peaks 1, 2, and 5 (see below), the spectrum of Na corresponds to the autoionizing states of Na following the excitation of a 2p electron. Peaks 3 and 4 are associated with the spin-orbit (s-o) doublets of the $2p^5 3s^2$ state of Na. The peaks between 28 and 30 eV are optically forbidden states of configuration $2p^5 3s3p$, observed previously only in Na^+-He-collisions.[21] Peaks above 30 eV have been observed in photoabsorption, and in this energy region there is a large number of closely-spaced lines in the absorption spectra which correspond to states of configuration $2p^5 3snd$, with $n \geqslant 3$.[19,20] Because of the limited resolution in our electron spectrum, each peak may actually be associated with several lines in the absorption spectrum.

The electron intensity around peaks 1 and 2 is due to $L_1L_{2,3}M_1$ Coster-Kronig transitions, i.e. $Na^+(2s2p^6 3s;\ ^{1,3}S) \rightarrow Na^{++}(2s^2 2p^5;\ ^2P_{1/2,3/2}) + e$. This assignment is supported by the following energy considerations. Using the equivalent-core approximation, the binding energy of the 3s-electron in the $2s2p^6 3s$ configuration of Na^+ can be equated to that of the 3s electron in the state $2s^2 2p^6 3s$ of Mg^+, which is 15.0 eV.[22] With $Na^{++}(2s2p^6)$ at 85.2 eV above the ground state of Na,[22] the 2s binding energy of Na is thus estimated to be 70.2 eV.

With the configuration $2s^2 2p^5$ of Na^{++} at 52.5 eV,[22] the $L_1L_{2,3}M_1$ transition should then lie around 17.7 eV, which is close to the experimental value 18.7 eV. Furthermore, the observed half width, 0.7 eV, of peaks 1 and 2 is in accord with the energy spread expected from the contributions of the multiplet splitting of the $Na^+(2s2p^6 3s;\ ^{1,3}S)$ and the s-o splitting of $Na^{++}(2s^2 sp^5;\ ^2P_{1/2,3/2})$ states, which are 0.39 eV[23] and 0.17 eV[22] respectively. The electron intensity around peak 5 cannot be satisfactorily attributed to autoionizing states with the excitation of a 2p-electron. Again through energy consideration, it is tentatively assigned to the $L_1L_{2,3}N_1$ Coster-Kronig transition, i.e., $Na^+(2s2p^6 4s;\ ^{1,3}S) \rightarrow Na^{++}(2s^2 2p^5;\ ^2P_{1/2,3/2}) + e$. The energy difference between the $2s2p^6 4s$ and $2s2p^6 3s$ configurations of Na^+ is approximately equal to that of the $2s^2 2p^6 4s$ and $2s^2 2p^6 3s$ configurations of Mg^+, which is 8.7 eV.[22] This value agrees reasonably well with the energy difference between peak 5 and the center of the peaks 1 and 2, i.e., 7.9 eV. The peaks designated I are attributed to inelastically scattered electrons resulting from the $3s \rightarrow 3p$ transition in Na.

In the course of this work, a concurrent study of Na[9b] using 2 keV electrons and with much higher resolution came to our attention. Overall there is very good agreement between the two studies. Comparing the two spectra shows much larger relative intensities of peaks 6, 7, and 8 in our spectrum. This observation is consistent with the fact that these peaks are associated with optically forbidden states and transitions to them are more probable by excitation with low energy electrons[6] found in the discharge plasma.

IV. DISCUSSION

As was pointed out earlier poor collimation and scattering from surfaces of the plasma electrons are partly responsible for the high background in the electron spectra. Also contributing to the background is the continuous energy distribution inherent in the plasma electrons, whose energies normally follow a Maxwellian distribution.[1] In addition, the maximum intensity of the background distribution in most of the spectra measured lies at around 5 - 6 eV, which is less than one-third of the binding energy of He as expected from earlier investigations.[1] In light of this and with the neglect of the difference in excitation cross sections the signal-to-background (S/B) ratio should become smaller as the energy of excitation increases, since a smaller fraction of the plasma electrons will have sufficient energy for excitation. This is indeed observed; the S/B ratio in the spectra deteriorates in the order K > Na > Xe > Kr, which is also the order of increasing energy of excitation. In the same context, the most energetic excitation so far observed is around 90 eV in the $M_{4,5}NN$ Auger spectrum of Kr. Another drawback of the electron source is that it needs careful tuning. Specifically, the pressure at which the electron mode is operable depends on the condition of the lamp, and so does the energy distribution of the electrons. This behavior probably derives from the nonreproducibility of electrode surfaces as a result of sputtering.

Despite these shortcomings, the plasma electrons do provide certain advantages over the conventional filaments. First, the plasma source shows very good resistance to poisoning. An immediate application of this property would be found in the study of reactive vapors, which are

detrimental to filaments. We have used the discharge source to excite the autoionization electron spectra of Ca, Sr, Ba, and other high temperature metal vapors.[24] The use of filaments in these instances would have required considerable technical manipulations, such as differential pumping for the filaments, to alleviate the problem. Secondly, the electron mode of the lamp is much easier to operate than the filament electron gun, which usually requires an elaborate focusing lens system and clean vacuum conditions. A further merit of the lamp is its potential to produce higher currents.

The discharge lamp has so far been used only in its original design (see Fig. 1) to act as an electron source. It seems certain there is ample room for improvement. For instance, the background can be reduced considerably by better focusing of the electrons and directing the beam away from the sample holder.[25] Better focusing will have the additional bonus of increasing the usable portion of the plasma source. Finally, acceleration of the electrons may be used to study more energetic excitations.

V. CONCLUSIONS

It has been demonstrated that, with proper pressure conditions, the plasma in the D.C. capillary discharge of a UV lamp can be used as an electron source in electron impact studies, when monochromatic electrons are not required. It seems reasonable to hold similar expectation for the plasma in other types of UV lamps. The present findings therefore establish the capability of a molecular UV photoelectron spectrometer of also doing low energy electron impact studies of autoionization processes. We have made use of this capability in our

Perkin-Elmer PS-18 spectrometer, and have studied a number of high temperature metal vapors.[24] In light of the present results, one should be cautious about the presence of autoionizing electron lines in the photoelectron spectra, especially of those compounds containing heavy elements, when recorded in a Perkin-Elmer spectrometer. It seems worthwhile pointing out that in the photoelectron spectra of Ca and Sr, autoionizing electrons have been detected with appreciable intensities with the He lamp operating at a pressure as high as 200 micron. On the other hand, it should prove very useful to study autoionization spectra in UV spectrometers simply by lowering the pressure.

ACKNOWLEDGEMENTS

We are indebted to Professor W. Mehlhorn and Dr. V. Schmidt for communicating their results of Na to us prior to publication.

This report was done with support from the U.S. Energy Research and Development Administration. Any conclusions or opinions expressed in this report represent solely those of the authors and not necessarily those of The Regents of the University of California, the Lawrence Berkeley Laboratory or the U.S. Energy Research and Development Administration.

REFERENCES

1. In principle, Auger processes can be regarded as autoionization of an ion state. Thus there is no fundamental reason to separate the two. However, the term autoionization is generally reserved for the transition of a neutral state into the continuum. In this paper, we have, for the sake of simplicity, used autoionization to include Auger transitions as well.

2. K. T. Compton, Rev. Mod. Phys. 2 (1930) 123.

3. B. B. O'Brien, Appl. Phys. Lett. 23 (1973) 503.

4. R. G. Garnsworthy, L. E. S. Mathias, and C. H. H. Carmichael, Appl. Phys. Lett. 19 (1971) 506.

5. a) H. Hillig, B. Cleff, W. Mehlhorn, and W. Schmitz, Z. Physik 268 (1974) 225.

   b) E. Breuckmann, B. Breuckmann, W. Schmitz, and W. Mehlhorn, Abs. of contributed paper to the 2nd Int. Conf. on Inner Shell Ionization Phenomena, Freiburg, March/April 1976.

6. T. W. Ottley and K. J. Ross, J. Phys. B 8 (1975) L249.

7. K. J. Ross and T. W. Ottley, Phys. Letters 54A (1975) 57.

8. K. J. Ross, W. R. Newell, T. W. Ottley, and S. H. Al-Shamma, J. Phys. B 8 (1975) L113.

9. a) B. Breuckmann and V. Schmidt, Z. Physik 268 (1974) 235.

   b) B. Breuckmann, V. Schmidt, and W. Schmitz, Abs. of contributed paper to the 2nd Int. Conf. on Inner Shell Ionization Phenomena, Freiburg, March/April 1976.

10. W. R. Newell, K. J. Ross, and J. B. Wickes, J. Phys. B 6 (1973) L337.

11. S. Süzer, M. S. Banna, and D. A. Shirley, J. Chem. Phys. 63 (1975) 3473.

12. a) S. Süzer, S.-T. Lee, and D. A. Shirley, submitted to Phys. Rev. A;
b) S. Süzer, S.-T. Lee, and D. A. Shirley, submitted to J. Chem. Phys.

13. L. O. Werme, T. Bergmark, and K. Siegbahn, Physica Scripta 6 (1972) 141.

14. L. J. Kieffer, Atomic Data 1 (1969) 19.

15. The pressure of the lamp is monitored by a thermocouple pressure gauge in the PS-18 spectrometer. Since the gauge has not been calibrated for the individual gases, the difference in our pressure readings had only qualitative significance.

16. M. W. D. Mansfield, Proc. R. Soc. Lond. A346 (1975) 539.

17. P. J. Foster, R. E. Leckenby, and E. J. Robbins, J. Phys. B 2 (1969) 478.

18. J. B. Mann, Los Alamos Scientific Report, LA 3691 (1968).

19. H. W. Wolff, K. Radler, B. Sonntag, and R. Haensel, Z. Physik 257 (1972) 353.

20. J. P. Connerade, W. R. S. Garton, and M. W. D. Mansfield, The Astrophysical Journal 165 (1971) 203.

21. D. J. Pegg, H. H. Haselton, R. S. Thoe, P. M. Griffin, M. D. Brown, and I. A. Sellin, Phys. Rev. 12 (1975) 1330.

22. C. E. Moore, Natl. Bur. Stand. (U.S.) Circ. 467, Vol. 1 (1949).

23. To first approximation ^1S:^3S states would be split by $2G^2(2s, 3s)$ by Van Vleck's Theorem, Phys. Rev. 45 (1934) 405.

24. S.-T. Lee et al., to be published.

25. In the present setup of the ionization chamber, the electron beam hits head-on with the bottom of the sample holder; see Ref. 11 for the diagram of the ionization chamber.

Table I. Kinetic Energies (eV) of the Peaks Observed in the Autoionization Electron Spectrum of K

Peak	This Work[a]	Ottley & Ross[b] 500 eV	Ottley & Ross[b] 29 eV	Mansfield[c]
1	13.90 (broad)			
2	14.38	14.38		14.383
3	14.66	14.64		14.640
4	15.44		15.43	15.419; 15.458
5	15.75			15.796
6	15.85	15.85	15.85	15.870
7	16.17	16.27	16.17	
8	16.46	16.36	16.36 16.46	
9	17.10	17.06 17.13	17.06	17.085
10	17.38		17.58	
11	17.75			
12	18.05	18.05	18.05	18.046; 18.075
13	18.40	18.38		18.389; 18.415
14	18.49	18.51		18.516; 18.616
15	18.96	18.94		18.945
		19.29		
		19.34		19.334
16	19.46	19.45 19.52		19.452; 19.455 19.497
17	19.66	19.62 19.70		19.619 19.707
18	19.98	20.04		20.034; 20.049

(continued)

Table I. (continued)

a) Experimental error is estimated to be ±0.05 eV. In the region between peaks 15 and 18, only the peak maxima are listed, though the intensity distribution suggests the presence of more than four peaks.

b) Ref. 6 gave spectra excited by electron beams of 500 eV and 29 eV.

c) Ref. 16; the kinetic energies listed are the excitation energies minus 4.339 eV, the 4s binding energy of K.

Table II. Kinetic Energies (eV) of the Peaks Observed in the Autoionization Electron Spectrum of Na

Peak	This Work[a]	Pegg et al[b]	Wolff et al[c]
1	18.47		
2	18.94		
3	25.63	25.63	25.630
4	25.80	25.86	25.796
5	26.64		
6	28.38	28.24	
7	28.80	28.76	
8	29.59	29.65	
9	30.70	30.66	30.630
10	30.99	30.96	30.991
11	31.54		
12	31.86	31.68	
13	32.25	32.2	
14	32.46	32.4	
15	32.79	33.0	

a) Experimental error is estimated to be ±0.05 eV.

b) Ref. 21

c) Ref. 19; the kinetic energies listed are the excitation energies minus 5.104 eV, the 3s binding energy of Na. There is a large number of closed spaced peaks observed in absorption in the energy region spanned by peaks 11 - 15, thus no entries are included here.

FIGURE CAPTIONS

Fig. 1. Schematic diagram of the discharge lamp.

Fig. 2. The $N_{4,5}OO$ Auger spectra of Xe excited by electrons produced from hot filaments (a) and the plasmas of different discharge lamps as indicated (b) - (f).

Fig. 3. The $M_{4,5}NN$ Auger spectra of Kr excited by electrons produced from hot filaments (a) and the plasma of the He lamp (b).

Fig. 4. The autoionization electron spectrum of K vapor.

Fig. 5. The autoionization electron spectrum of Na vapor.

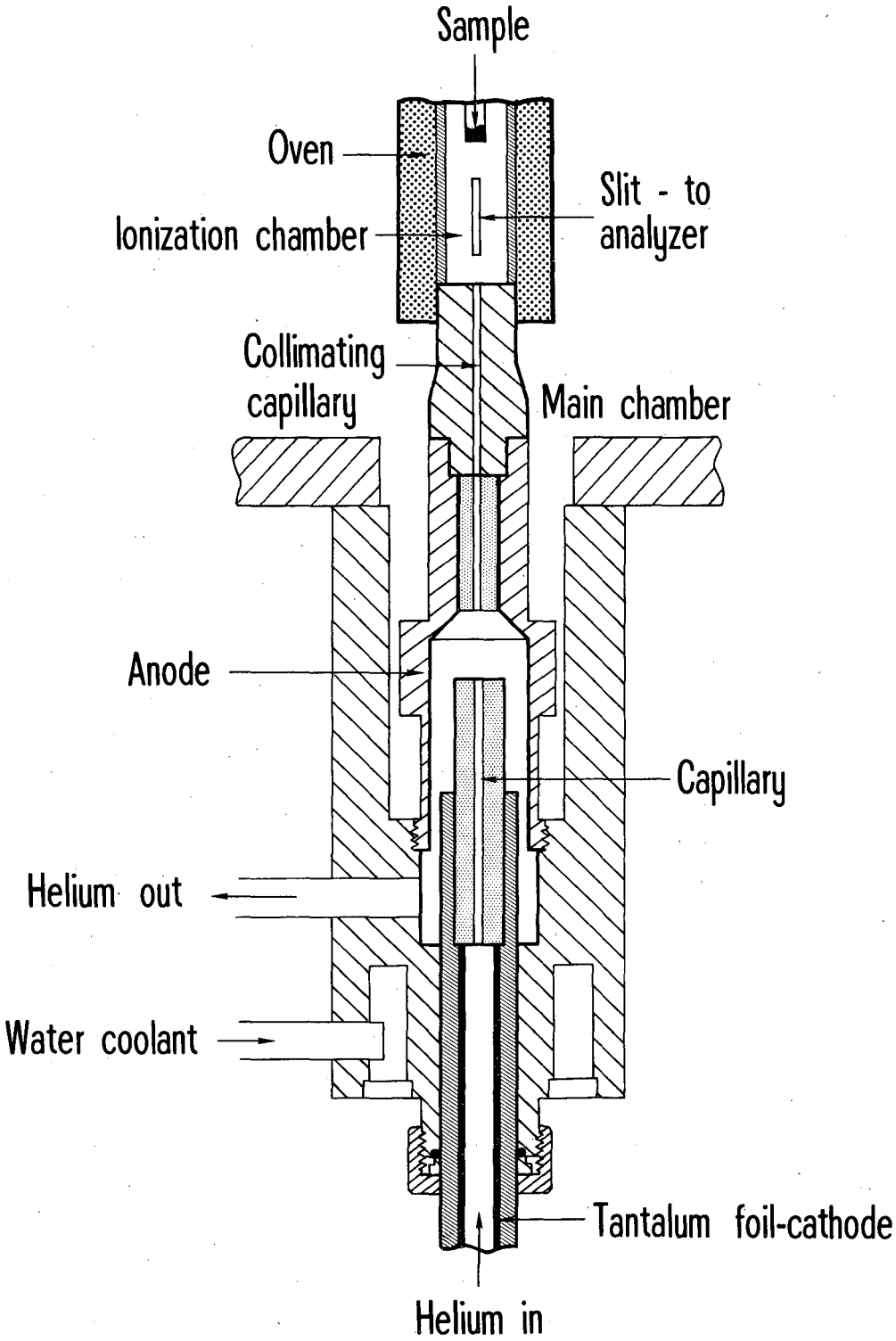

Fig. 1

XBL 764-2762

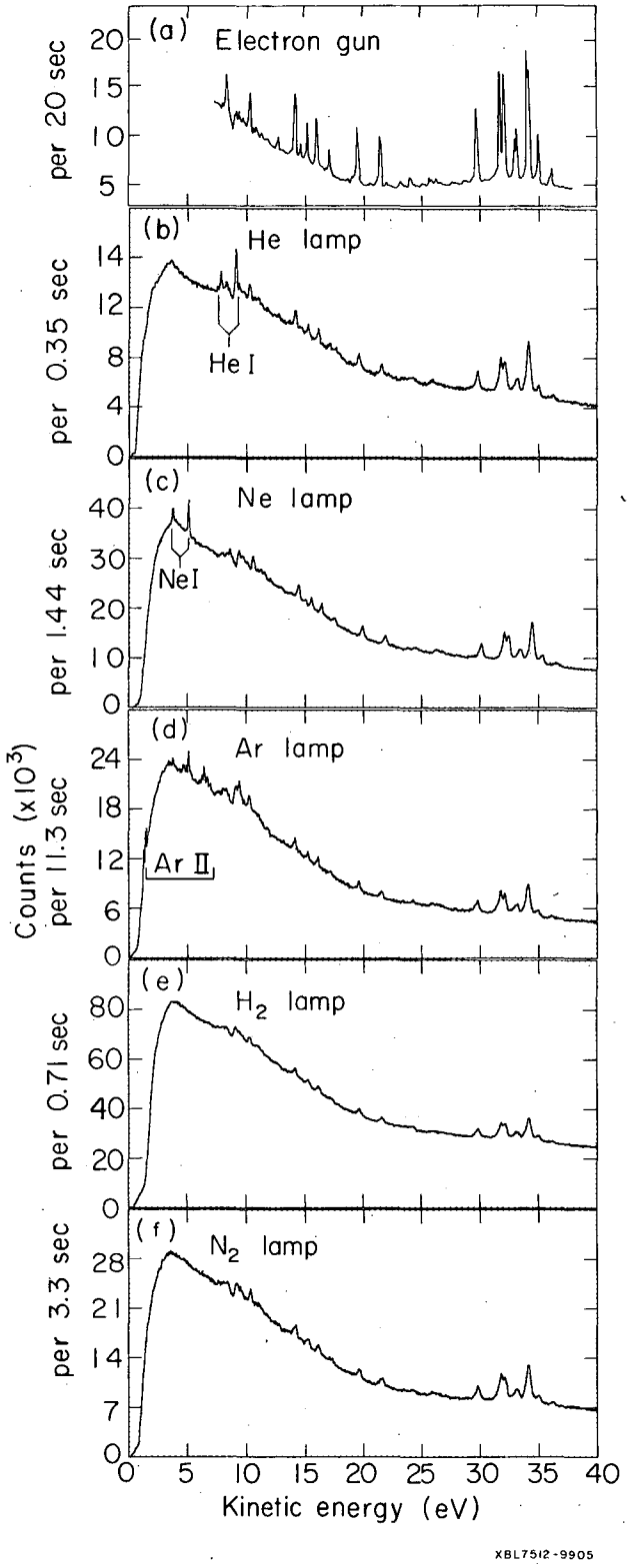
(a)
Electron gun
per 20 sec
(b)
He lamp
He I
per 0.35 sec
(c)
Ne lamp
Ne I
per 1.44 sec
(d)
Ar lamp
Ar II
Counts (x10³) per 11.3 sec
(e)
H₂ lamp
per 0.71 sec
(f)
N₂ lamp
per 3.3 sec
Kinetic energy (eV)
XBL7512-9905

Fig. 2

0 0 0 0 4 5 0 5 8 3 6

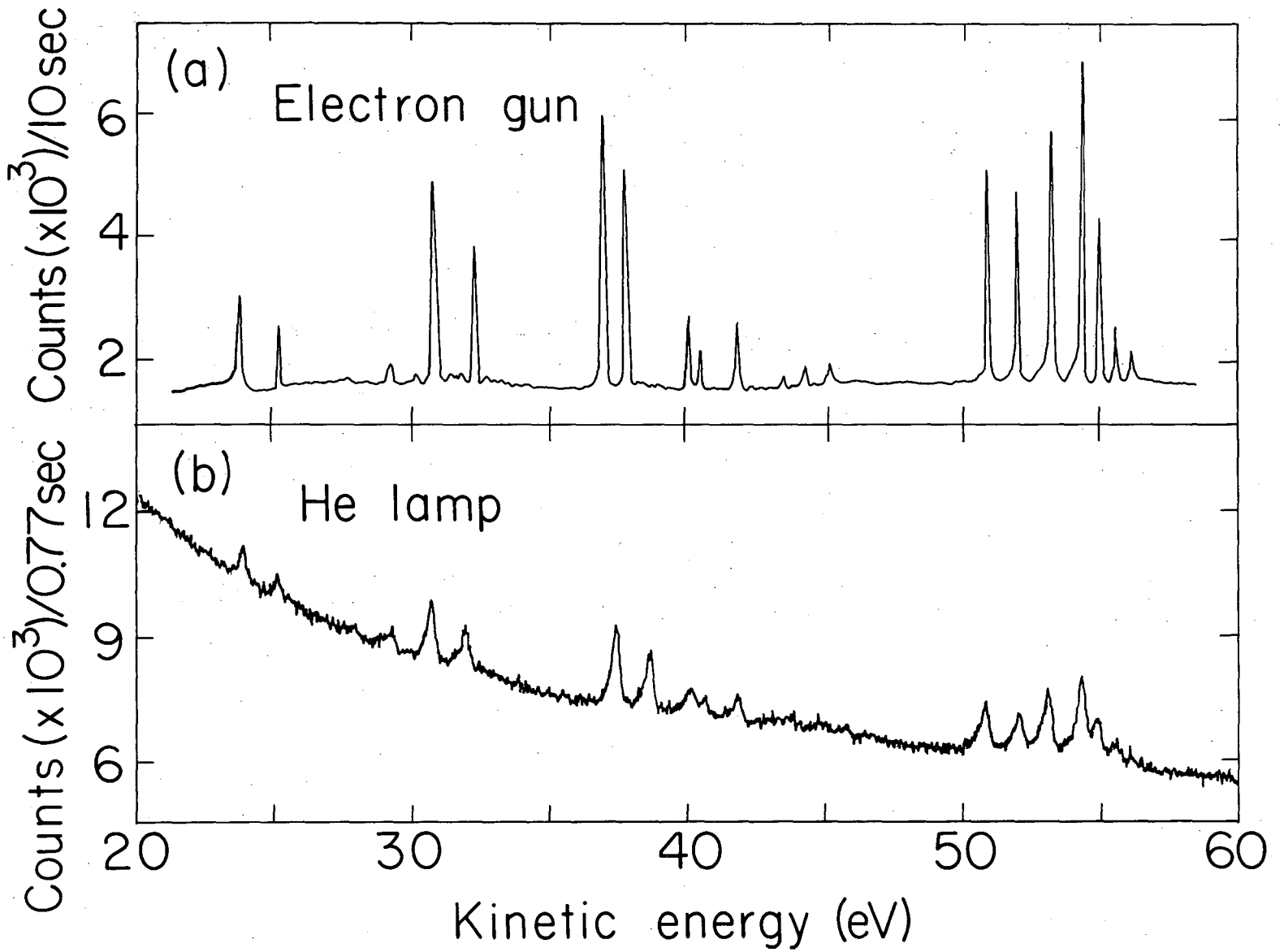

XBL7512-9906

Fig. 3

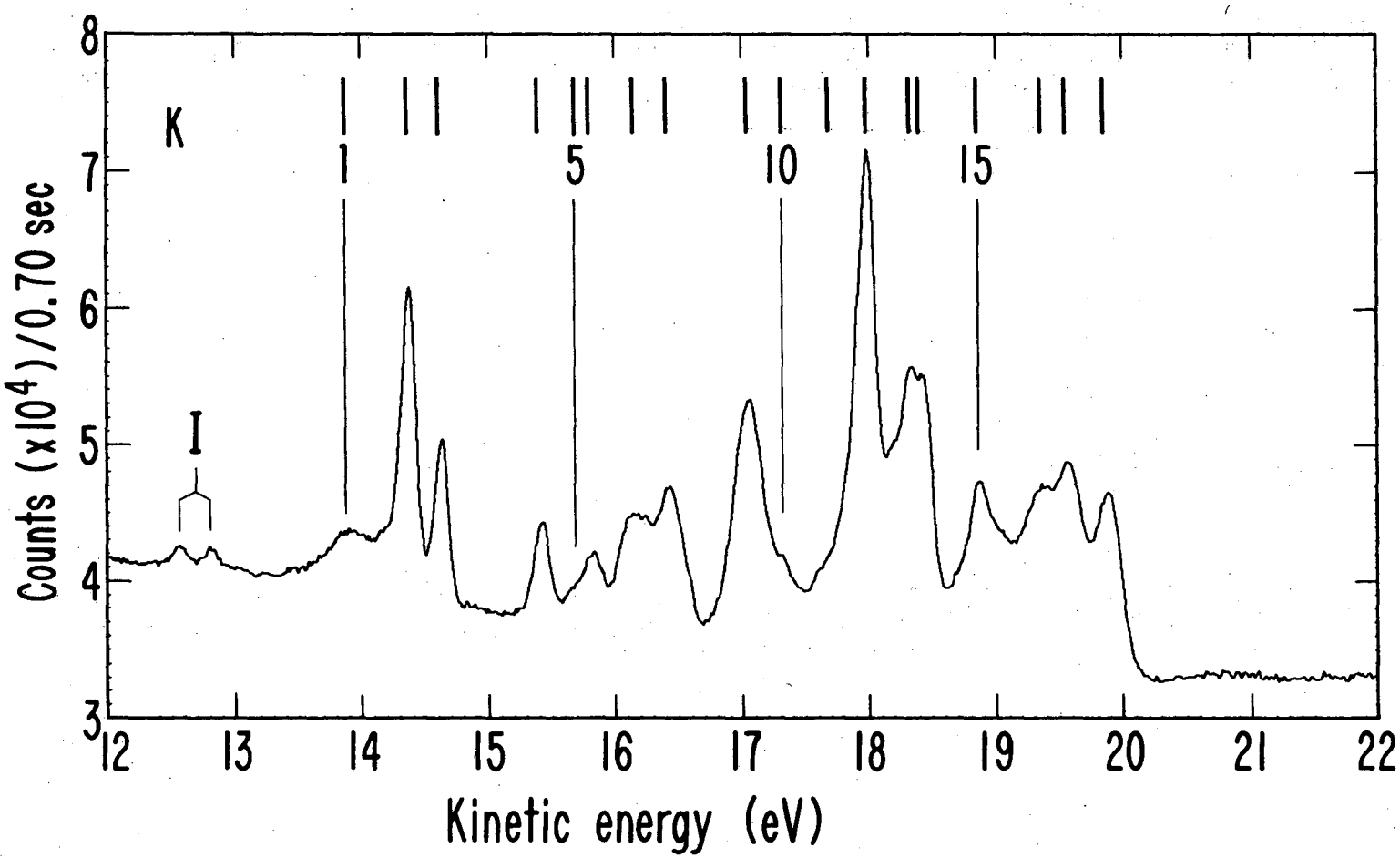

XBL 763-2477A

Fig. 4

0 0 0 0 4 5 0 5 8 3 7

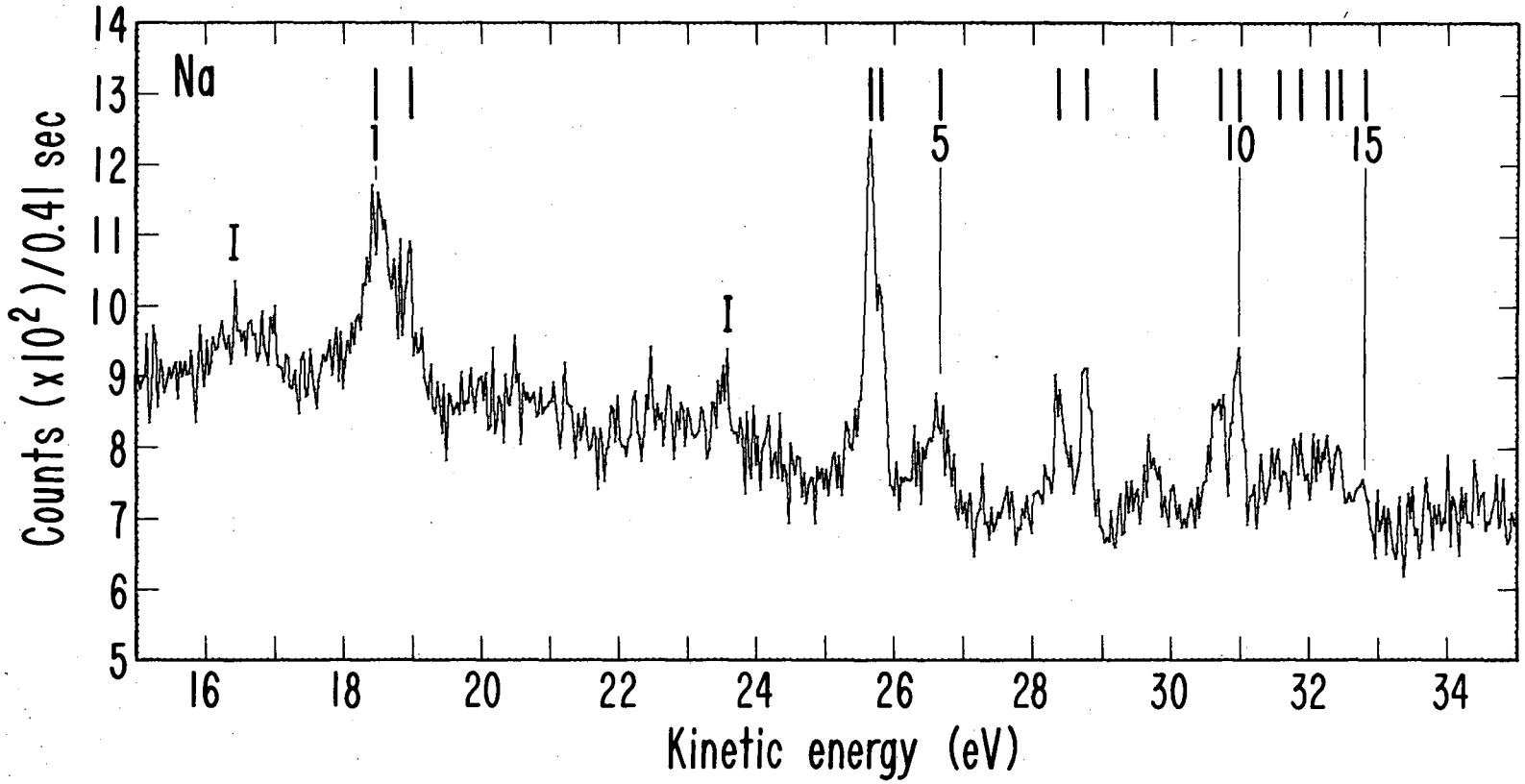

XBL 763-2475

Fig. 5

0 0 0 0 4 5 0 0 8 3 8

LEGAL NOTICE

This report was prepared as an account of work sponsored by the United States Government. Neither the United States nor the United States Energy Research and Development Administration, nor any of their employees, nor any of their contractors, subcontractors, or their employees, makes any warranty, express or implied, or assumes any legal liability or responsibility for the accuracy, completeness or usefulness of any information, apparatus, product or process disclosed, or represents that its use would not infringe privately owned rights.

TECHNICAL INFORMATION DIVISION
LAWRENCE BERKELEY LABORATORY
UNIVERSITY OF CALIFORNIA
BERKELEY, CALIFORNIA 94720