Lh. 1832

LBL-5231

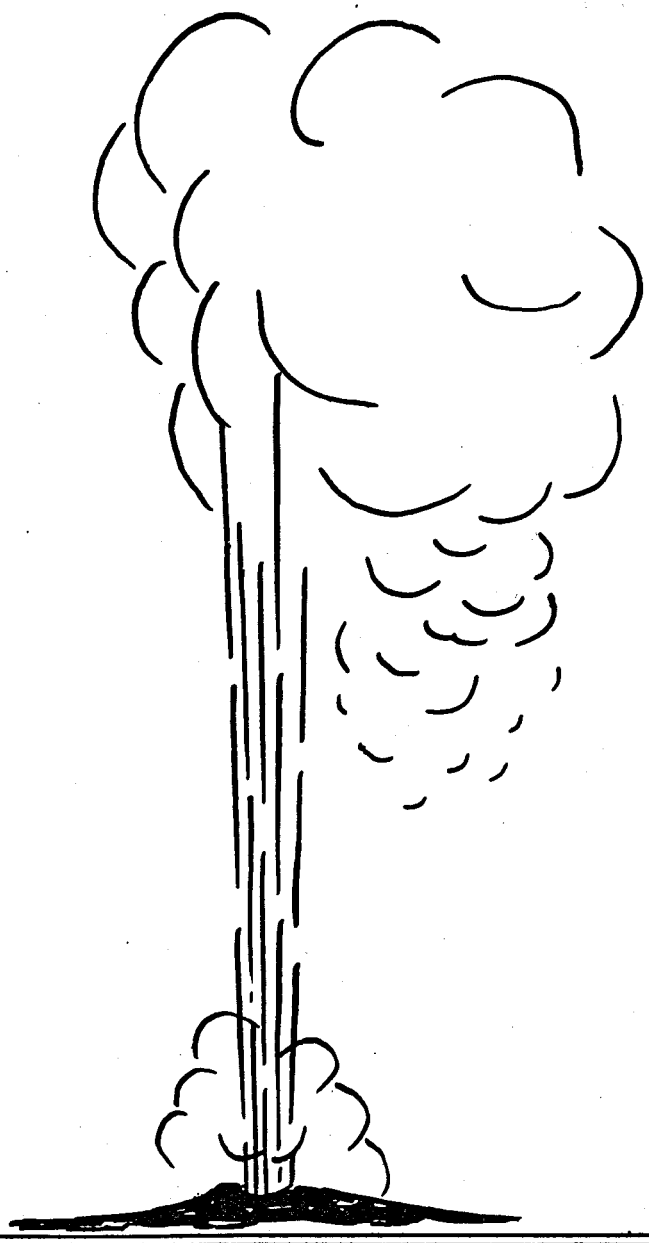

RESOURCE, TECHNOLOGY, AND ENVIRONMENT AT THE GEYSERS

By
Oleh Weres
Karen Tsao
Byron Wood

MASTER

June 1977

Work Performed Under Contract No. W-7405-ENG-48

Lawrence Berkeley Laboratory
University of California
Berkeley, California

U. S. DEPARTMENT OF ENERGY
Geothermal Energy

DISTRIBUTION OF THIS DOCUMENT IS UNLIMITED

DISCLAIMER

This report was prepared as an account of work sponsored by an agency of the United States Government. Neither the United States Government nor any agency Thereof, nor any of their employees, makes any warranty, express or implied, or assumes any legal liability or responsibility for the accuracy, completeness, or usefulness of any information, apparatus, product, or process disclosed, or represents that its use would not infringe privately owned rights. Reference herein to any specific commercial product, process, or service by trade name, trademark, manufacturer, or otherwise does not necessarily constitute or imply its endorsement, recommendation, or favoring by the United States Government or any agency thereof. The views and opinions of authors expressed herein do not necessarily state or reflect those of the United States Government or any agency thereof.

DISCLAIMER

Portions of this document may be illegible in electronic image products. Images are produced from the best available original document.

NOTICE

This report was prepared as an account of work sponsored by the United States Government. Neither the United States nor the United States Department of Energy, nor any of their employees, nor any of their contractors, subcontractors, or their employees, makes any warranty, express or implied, or assumes any legal liability or responsibility for the accuracy, completeness or usefulness of any information, apparatus, product or process disclosed, or represents that its use would not infringe privately owned rights.

This report has been reproduced directly from the best available copy.

Available from the National Technical Information Service, U. S. Department of Commerce, Springfield, Virginia 22161.

Price: Paper Copy $12.00
Microfiche $3.00

LBL-5231
Distribution Category UC-66a

RESOURCE, TECHNOLOGY AND ENVIRONMENT AT THE GEYSERS

NOTICE
This report was prepared as an account of work sponsored by the United States Government. Neither the United States nor the United States Department of Energy, nor any of their employees, nor any of their contractors, subcontractors, or their employees, makes any warranty, express or implied, or assumes any legal liability or responsibility for the accuracy, completeness or usefulness of any information, apparatus, product or process disclosed, or represents that its use would not infringe privately owned rights.

Oleh Weres, Karen Tsao and Byron Wood

June 1977

Energy & Environment Division
Lawrence Berkeley Laboratory
University of California
Berkeley, California 94720

DISTRIBUTION OF THIS DOCUMENT IS UNLIMITED

TABLE OF CONTENTS

CHAPTER			PAGE NUMBER
I	Introduction		
	1.1	The Geysers and Lake County	I-1
	1.2	The Purpose of This Report	I-4
	1.3	A Note on Units	I-6
	1.4	Acknowledgments	I-7
	1.5	And Apologies	I-9
II	Chapter 2 was not written		
III	Energy, Enthalpy and the First Law		
	3.1	Energy and Power	III-1
	3.2	Energy Conversion and the First Law of Thermydynamics.	III-1
	3.3	Enthalpy or Heat Content	III-2
	3.4	The Boiling of Water: Vapor Pressure and Superheating.	III-3
	3.5	Latent Heat	III-4
IV	Vapor Producing Geothermal Reservoirs - Review and Models		
	4.1	Introduction	IV-1
	4.2	The Nature of the Reservoir Fluid	IV-1
	4.3	"Pore Water" and the "Deep Water Table"	IV-3
	4.4	"Overlaying" Water Bodies	IV-6
	4.5	The General Hydrology of the Lardarello Basin and the Role of the Geothermal System	IV-8
	4.6	The Question of Initial Conditions	IV-11
	4.7	A Conceptual Model of the Lardarello System	IV-15
	4.8	The Size and Estimation of Heat Reserves	IV-21
	4.9	The Size and Estimation of Water Reserves	IV-29
	4.10	The Maximum Enthalpy Phenomenon	IV-33
	4.11	A Conceptual Model of the Geysers System	IV-39
	4.12	The Superheating of Geothermal Steam	IV-44
	4.13	The Limited Efficiency of the Conversion of Geothermal Heat to Work	IV-48
	4.14	The Effect of the Non-Condensible Gases	IV-49

TABLE OF CONTENTS (Continued)

CHAPTER		PAGE NUMBER
V	Geothermal	
5.1	Introduction	V-1
5.2	Exploration and Field Planning	V-3
5.3	Drill Site Selection and Stability	V-5
5.4	Drilling Pan and Sump	V-7
5.5	The Drilling Process	V-9
5.6	The Circulation System and the Two Types of Drilling	V-11
5.7	Noise and Noise Control	V-17
5.8	Directional Drilling	V-20
5.9	The Reasons for Directional Drilling	V-24
5.10	Casing and Completion	V-26
5.11	Testing and Steam Production	V-30
5.12	Drilling for Hot Water	V-32
5.13	Blowouts - Causes, Prevention, and Cure	V-33
5.14	A Famous Blowout - Thermal #4	V-38
5.15	The Environmental Impact of Blowouts	V-41
VI	Entropy and the Second Law	
6.1	Entropy and the Second Law of Thermodynamics	VI-1
6.2	The Thermodynamic Efficiency of Heat Engines	VI-1
VII	Power Plants - Basics	
7.1	Turbines and Energy Conversion	VII-1
7.2	Condensers and the Need for Cooling	VII-2
7.3	The Gas Ejectors	VII-4
7.4	Unit 6 - A Typical Geysers Power Plant	VII-4
7.5	The Thermodynamic Performance of Unit 6	VII-9
7.6	Unit 13 - A Surface Condenser Equipped Power Plant	VII-16
7.7	Alternate Cooling Methods	VII-20
VIII	H_2S Emissions	
8.1	A Warning	VIII-1
8.2	Steam Compositions	VIII-2
8.3	Hydrogen Sulfide Emissions	VIII-10

TABLE OF CONTENTS (Continued)

CHAPTER		PAGE NUMBER
8.4	Dispersion of Hydrogen Sulfide	VIII-18
8.5	Present Day H_2S Concentrations in the Immediate Geysers Area	VIII-20
8.6	Present Day H_2S Concentrations in Southern Lake County	VIII-21
8.7	The History of H_2S Emissions and Their Future	VIII-25
8.8	The Atmospheric Chemistry of H_2S	VIII-29
8.9	Addenda and Errata	VIII-33
IX.	Hydrogen Sulfide - Possible Health Effects and Odor	
9.1	The Purpose of This Chapter	IX-1
9.2	Acute Toxicity	IX-4
9.3	Toxicity at Concentrations Occurring with Occupational Exposure	IX-9
9.4	Effects at 30 ppbv to 1 ppmv	IX-17
9.5	Effects of H_2S at Ambient Air Concentrations Below the California Ambient Air Quality Standard (30 ppbv)	IX-21
9.6	Odor Perception Threshold	IX-27
9.7	H_2S Air Quality Standards	IX-33
9.8	Possible Other Odorous Emissions	IX-39
X.	Other Emissions	
10.1	Water Quality and Condensate Spills	X-1
10.2	Emissions of Dust and Debris	X-6
10.3	Other Chemical Emissions	X-10
10.4	Radon Emissions	X-14
XI	Powerplant Hydrogen Sulfide Abatement	
11.1	The Basic Principles and Strategies of H_2S Abatement	XI-1
11.2	Steam Convertors	XI-5
11.3	Preplant Oxidation	XI-10
11.4	Upstream Absorption Scrubbers	XI-12
11.5	The "Deuterium Process"	XI-15
11.6	Condensate Chemistry in Contact Condenser Plants	XI-16
11.7	The Chemistry of Surface Condensers	XI-22

TABLE OF CONTENTS (Continued)

CHAPTER		PAGE NUMBER
	11.8 A Nonchemical Means of H_2S Partition Control	XI-26
	11.9 Deleted section	
	11.10 The Burner-scrubber System	XI-29
	11.11 pH Control by SO_2 Injection	XI-31
	11.12 pH Control with H_2SO_4	XI-34
	11.13 The Iron Catalyst System	XI-34
	11.14 Condensate Treatment with Hydrogen Peroxide	XI-37
	11.15 Destruction of Separated H_2S	XI-39
	11.16 H_2S Abatement of Preplant Steam Releases	XI-42
	11.17 Summary	XI-43
XII	Hot Water Based Geothermal Development	
	12.1 Hot Water in Lake County?	XII-1
	12.2 Hot Water Geothermal Technologies	XII-1
	12.3 H_2S Emissions from Hot Water Geothermal Plants	XII-4
	12.4 Problems of Water Supply and Disposal	XII-6
	12.5 Subsidence and Groundwater Problems	XII-8
	12.6 Environmental Impacts of Non-electrical Uses of Geothermal Brines	XII-10
XIII	Phytotoxicity of Geothermal Emissions	
	13.1 Introduction	XIII-1
	13.2 Area Showing Vegetation Stress	XIII-1
	13.3 Species Involved	XIII-1
	13.4 Characteristics of Vegetation Stress	XIII-3
	13.5 Geothermal Emissions	XIII-4
	13.6 Cooling Tower Drift Diffusion	XIII-6
	13.7 Hydrogen Sulfide (H_2S) Toxicity	XIII-6
	13.8 Ammonia (NH_3) Toxicity	XIII-11
	13.9 Boron (B) Toxicity	XIII-12
	13.10 Physiological Aspects of Toxic Emissions	XIII-14
	13.11 Summary	XIII-15

Appendices - Metric Unit Conversion and Water Saturation Pressure Tables

Bibliography

LIST OF TABLES

		Page
Table 4.1	Final Temperature and Steam Yield for Initially Water Saturated Reservoirs Producing Steam to 8 Bar Final Pressure	IV-56
Table 5.1	Comparison of Mud and Air Drilling	V-16
Table 5.2	Drilling Noise Sources	V-18
Table 5.3	Noise Levels Due to Geothermal Development Activities	V-19
Table 5.4	Criteria Influencing Depth of Deflection Point .	V-29
Table 7.1	Geysers Unit 6 - Efficiency Losses - 51.4°C Liquid Water Taken as Enthalpy Zero	VII-15
Table 8.1	Gases and Solids in Geysers Area Steam (ppmw). .	VIII-5
Table 8.2	Gases in Geysers Area Steam (ppmv)	VIII-6
Table 8.3	Condensate Analyses from Castle Rock Springs Area	
Table 8.4	H_2S Concentrations in the Steam of Individual Geysers Units	VIII-8
Table 8.5	Composition of Gas Fraction of the Steam at Selected Geothermal Developments (Weight %). . .	VIII-9
Table 8.6	Breakdown of Average 1975 H_2S Emissions from Geysers Geothermal Development	VIII-16
Table 8.7	Hydrogen Sulfide Emissions of Selected Geothermal Areas	VIII-17
Table 8.8	H_2S Frequency of Occurrence, Second Quarter, 1976	VIII-24
Table 8.9	Estimated Historical and Projected H_2S Emissions Geysers Units 1-12	VIII-27
Table 9.1	Effects of Inhaling Large Concentrations of H_2S.	IX-7
Table 9.2	Frequency of Symptoms and Signs in Forty-Seven Hospitalized Patients	IX-8
Table 9.3	Vasilieva's (1973) Comparison of the Rates of Menstrual Irregularities Among Three Groups of Female Rayon Workers	IX-15
Table 9.4	Embryotoxic Effects of H_2S and CS_2 Exposure of Rats	IX-16
Table 9.5	Number of Sick per 1000 in 1948 in the Gas-Equipped and Control Section of the City	IX-25
Table 9.6	Morbidity Among Buguruslan Residents per 1000 of Given Age Groups	IX-26
Table 9.7	Various Reported H_2S Odor Thresholds (ppbv). . .	IX-31
Table 9.8	Ambient Air Quality Standards	IX-38

		Page
Table 9.9	Odor Thresholds for Various Reduced Sulfur Compounds (ppbv)	IX-41
Table 10.1	Typical Plant Condensate Analyses from the Geysers	X-7
Table 10.2	Emissions of Environmentally Suspect Substances from the Geysers Development	X-15
Table 11.1	Powerplant H_2S Abatement Strategies	XI-4
Tabel 11.2	Simplified Condenser Chemical Balance, Geysers Unit 3	XI-21
Table 12.1	Water and Heat Flows in Three Geothermal Plant Cycles	XII-12
Table 12.2	Chemical Composition of Selected Geothermal Fluids	XII-13
Table 13.1	Hydrogen Sulfide Injury to Selected Plants at Different Concentrations	XIII-7
Table 13.2	Effect of Temperature on Hydrogen Sulfide Injury	XIII-7
Table 13.3	Time in Minutes Required for 50 Percent Injury to Plants at 1000 ppmv Gas Concentration . . .	XIII-8
Table 13.4	Effect of Hydrogen Sulfide on Certain Vital Functions of Sprouting Radish Seeds	XIII-9
Table 13.5	Concentration of Boron in Dry Leaves from Plants Grown in Boron Nutrient Solutions	XIII-12
Table 13.6	Time Necessary to Produce Boron Toxicity Symptoms with 10 ppmv in Solution, and Boron Concentrations in Leaves of Various Species	XIII-13
Table A.1	Metric Units and Miscellaneous Conversion Factors	A-1
Table A.2	Saturation Pressures of Liquid Water	A-2

LIST OF FIGURES

		Page
Figure 1.1	Regional map showing the Geysers in relation to San Francisco Bay Area and Lake County	I-2
Figure 1.2	Map showing location of steam wells and units in the Geysers geothermal area	I-3
Figure 4.1	Basic thermodynamic attributes of steam producing geothermal reservoirs	IV-52
Figure 5.1	Typical casing program at the Geysers	V-28
Figure 7.1	Heat balance diagram, designed load, Units 5 and 6	VII-5
Figure 7.2	Heat and mass balance, Geysers Unit 6	VII-6
Figure 7.3	Heat and mass balance, Geysers Unit 13	VII-17
Figure 8.1	Location and layout of the SRI Geysers monitoring network with wind flow patterns	VIII-23
Figure 11.1	Steam converter	XI-6
Figure 11.2	Chemical balance, Geysers Unit 3	XI-20

CHAPTER ONE - INTRODUCTION

S1.1 The Geysers and Lake County

The Geysers geothermal development is the largest in the world. The generating capacity of the present eleven Units is 502 megawatts, and this will rise to about 900 MW when Units 12 through 15 are completed in 1978 and 1979. Recent steam strikes in Lake County seem to justify the expectation of at least several more Units beyond 15, and the Pacific Gas and Electric Company presently anticipates an ultimate total capacity of 2000 MW (C.J. Weinberg, private communication). It is clear that the Geysers will continue to be the largest geothermal development in the world for the foreseeable future, and it seems likely to account for over half of American geothermal capacity until at least 1985.

The existing eleven Units are located in the remote northeastern corner of Sonoma County, California (see Figure 1). This area is nearly uninhabited, and prior to geothermal development, the only economic activities in it were grazing and mercury mining. The location of Units 1 through 6 deep down in Big Sulfur Creek Canyon means that their hydrogen sulfide (H_2S) emissions tend not to be dispersed very far horizontally, and the early development of the Geysers was able to proceed without generating any environmental complaints. However, further development slowly climbed up over the west flank of Cobb Mountain, and has now reached the ridge separating Sonoma and Lake Counties. Several kilometers to the southeast, most of the wells in the Unit 13 area are in Lake County as will be the Unit itself (see Figure 1.2). Most expansion beyond Unit 14 is also expected to take place in Lake County. In addition to the estimated 2000

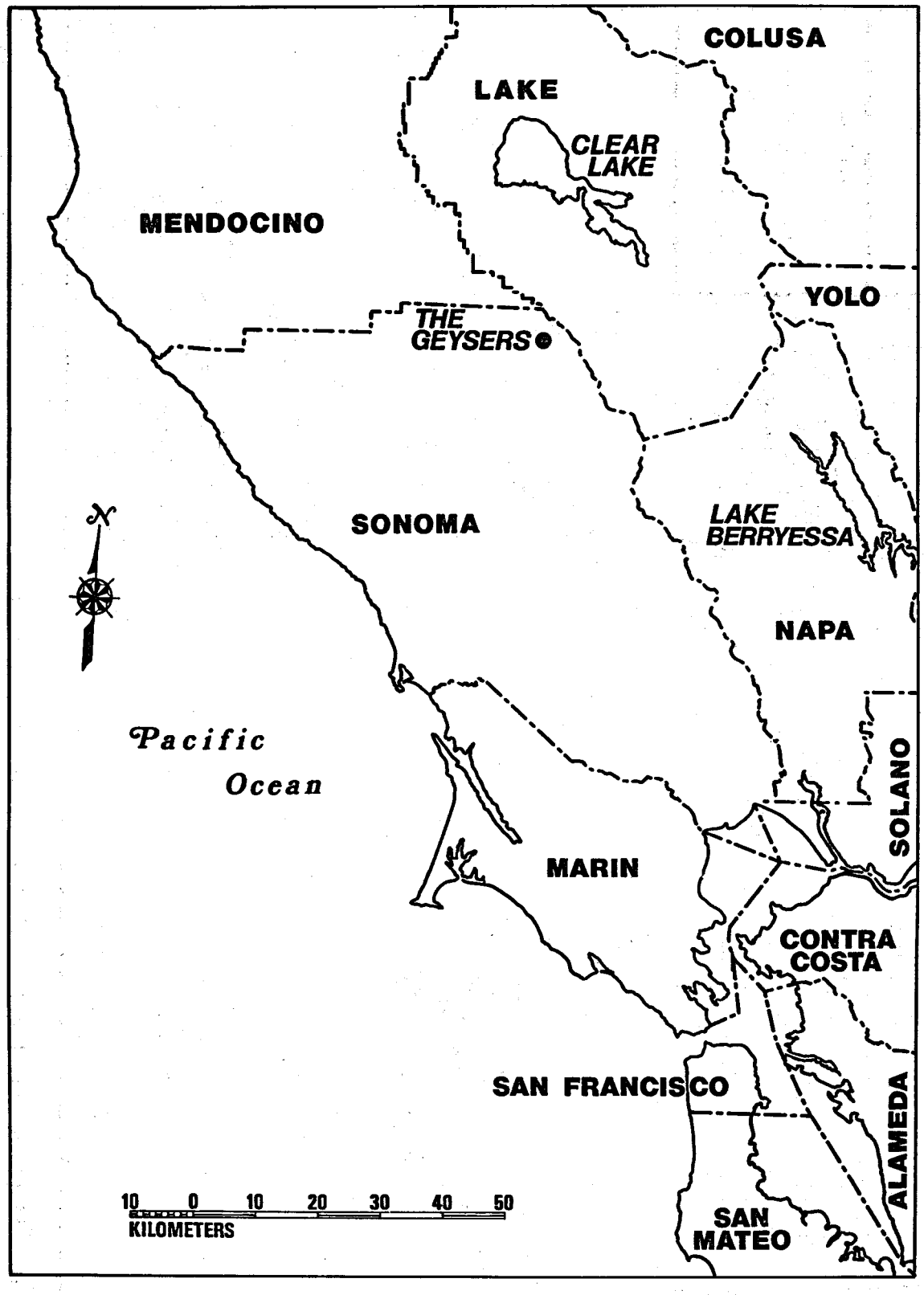

XBL 774-919

Figure 1.1 Regional map showing the Geysers in relation to San Francisco Bay Area and Lake County.

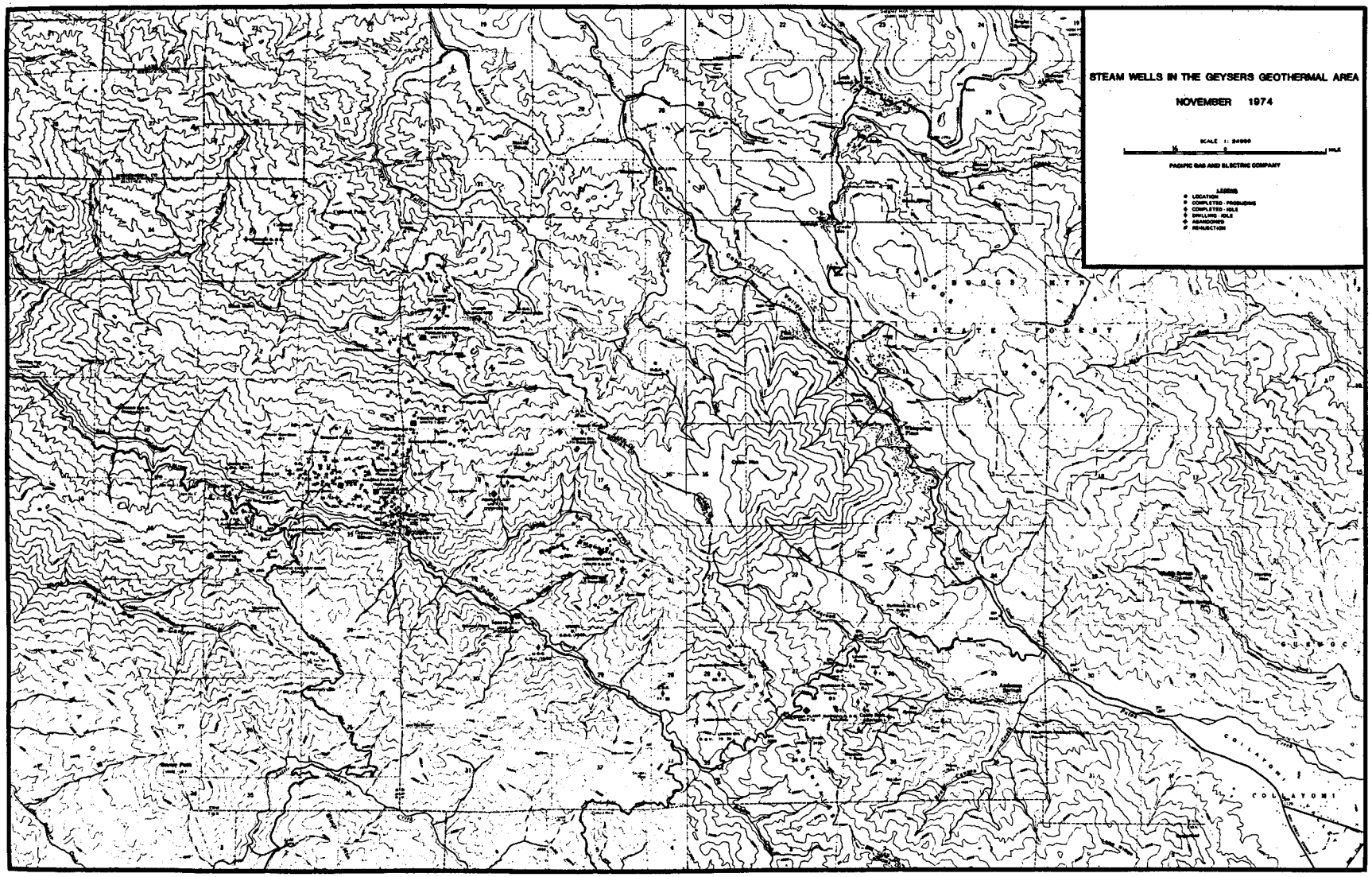

Figure 1.2 Map showing location of steam wells and units in the Geysers geothermal area.

XBL 7510-8375

MW potential of the Geysers steam field, Lake County is believed to have sizeable hot brine resources in the area between Cobb Valley and slightly beyond the Lower Arm of Clear Lake.

Southern Lake County is inhabited, and the nearest of its inhabitants to the Geysers live just on the other side of Cobb Mountain in Cobb Valley. The majority of the people in these towns are retired, and moved there because of the beautiful scenery and clean air. There are also a number of summer resorts in the Cobb Valley and the adjacent areas of southern Lake County. When the odor of H_2S finally became occasionally perceptible in the Cobb Valley and the sound of air drilling in the Unit 13 area reached the town of Anderson Springs, the inevitable uproar occurred. Because most of that portion of southern Lake County which has geothermal potential is also largely a retirement and resort area, the concern for the environment spread quickly. (See Vollintine and Weres, 1976a and b.) Just as quickly a progeothermal movement arose. It too has a solid base. The County has the lowest average per capita income in the state and its labor force suffers from the seasonal job market fluctuations typical of the agriculture and the resort industries.

§1.2 The purpose of this report

The widespread public debate over further geothermal development at the Geysers and in Lake County has created a general interest in the Geysers development. Those public agencies which are charged with regulating the Geysers development and their environmental consultants have an even more pressing need for information about it. Up until now, this information has only been available in such scattered and often highly technical

form that only those who actually work in the geothermal energy area have had functional access to it.

This report is intended to remedy that lack by providing a comprehensive and readable account of the Geysers development, its environmental impacts, and the state of development of the technology for mitigating them. It is not intended to be an Environmental Impact Report; rather, it is intended to complement the numerous EIR's(and EIS's, EDS's, etc.) which have dealt with geothermal development in the area. EIR's are very site specific and, because they are written mostly by environmental scientists, they focus much more on the local environment than upon the nature of the resource, the technology, or other such generic questions. Our report is mostly about the resource, the technology, and its generic environmental impacts. We are sure that it will be put to good use as a source document by those who prepare EIR's. Its companion report by Vollintine, Sathaye, and Kunin (1977) is likewise intended to serve as a source document and data base for the study of the socioeconomic impacts of geothermal development in Lake County.

Besides addressing these immediate needs for information, we intend this report to be a general review, description, and history of geothermal development at the Geysers. Considerable space has also been devoted to the Lardarello geothermal development in Tuscany (N.Italy) which is the <u>second</u> largest in the world. It too exploits native steam (rather than hot water) and this means that the reservoir and technology there are quite similar to those at the Geysers. Indeed, Chapter 4, which discusses steam producing geothermal reservoirs, is more about Lardarello than about the Geysers simply because much more information is publicly available about the Lardarello system.

In order to make this report comprehensible to the widest possible readership, we have assumed no prior knowledge of geothermal energy on the reader's part. Anyone who has studied the first year of college chemistry or its equivalent should be able to follow almost everything in this report; much of it doesn't require even that.

We have gone so far as to present brief, elementary (though rigorously correct) explanations of the fundamental principles of thermodynamics (Chapters 3 and 6). The reader should make every effort to understand this material, because if he does, he should be able to understand the nature of the resource and the basic logic of the technology as well as anyone.

The reader will notice that throughout this report many important questions have been answered with many qualifications or not at all. In some cases this merely reflects our own lack of knowledge. In most cases (we hope) it reflects the fact that no one really knows the answer. Geothermics is an area on the frontier of science and technology which has been advancing and posing new questions much faster than these could be answered. We see no reason to try to hide this fact.

S1.3 A note on units

This report is mercilessly metric, and International System Metric at that. The only major exceptions to this are to be found in Chapter 5 where pipe diameters are given in inches as well as centimeters. Also, S5.15 consists mostly of a lengthy quotation which has been left in the original American units. The S.I. metric system has been used because

it is, by far, the simplest and is the only one which is used and understood throughout the world. If the reader doesn't approve, tough; a table of conversion factors is to be found in the back (Table A1).

The main things to remember are: 1 cm = 0.3937 inches, 1 meter = 3.281 feet, 1 meter cubed = 264.2 gallons, 1 kilogram = 2.205 pounds, 1 metric tonne = 1,000 kg = 1.102 American tons, 1 kilometer = 0.62137 miles, 1 hectare = 2.471 acres, 1 hectare-meter = 8.11 acre-feet, 1 kilojoule = 0.9486 BTU, and 1 bar = 0.987 sea level atmospheres. Metric tonnes are simple referred to as "tonnes" throughout and the peculiar spelling is used to remind the reader that we don't mean American tons. Also remember that water freezes at 0° Celsius and boils at 100°C. A kilowatt-hour is equal to 3,600 kilojoules.

Very large and very small numbers are given in "scientific" notation i.e., 2.1×10^6 = 2,100,00 and 2.1×10^{-6} = 0.0000021. In other words, the power of ten tells you how many places to move the decimal point. A positive power moves it to the right, and a negative one to the left.

S.1.4 Acknowledgements

The preparation of most of this report was supported by the Integrated Assessment Program of the Division of Biomedical and Environmental Research of the U. S. Energy Research and Development Administration. The preparation of Chapter 4 was supported by the Division of Geothermal Energy of U.S.-E.R.D.A.

We would like to thank the following for their contributions of information and encouragement to the preparation of this report:

G.W. Allen
M. Angwin
J.A. Apps
D. Ashe
P. Atkinson
G. Bachrach
F. Bacon
B. Bader
J. Barbarow
L. P. Bauer

W. Bingham
J. Bodington
J. Bresee
F. Brown
A.R. Buckman
R.J. Budnitz
G. Bush
T. Cahill
L.E. Capuano
H.M. Castrantas
R. Celati
K. Cesar
R. Cooper
T. Cordill
R. Corwin
A. Dal Secco
J. Dionne
J. Donnelly
R. Dudlinger
M. Dwyer
T. Evans
L.J. Ezell
H. Falk
J.P. Finney
P. Fintschenko
Mr. & Mrs. F.Frates
G. Frye
M. Gallagher
C. Geoble
R.V. Giacosia
R. Gilliland
E. Giusti
J.R. Goldsmith
M.S. Gulati
E. Hammet
P.R. Harrison
J. Harte
W.W. Harvey
V. Haven
J. Heffernan
C.L. Hemstreet
J. Herrell
H. Hess
D. Hill
C. Hills
R. Hodam
J.M. Howard
W.M. House
H.M. Howe
D. James
D.F. Johnson
P. Kruger
T. Lahmeyer
C. Langston
S. LeGore
P. Leitner
W. Letchworth
M. Lippmann
R. Loose
E. Majer
C. Martz
J. McColl
S. McKee
R. McLaughlin
J. McNay
M.Z. Meidav
L. Miller
K. Mirk
M. Nathenson
H. Nelson
G. Neri
T. Nicholas
J.A. Nielson
G. Olsen
R.S. Osterling
H.H. Paalman
T. Patton
L.B. Perry
P. Phelps
S. Phillips
S. Prestwick
R. Raschen
M. Rayburn
M. Reed
D. Robertson
R. Russell
S. Sanyal
M. Schroeckengost
R. Schroeder
S.R. Schwartz
K. Semrau
D. Serpa
M.K. Simmons
W.A. Smith
A. Soinsky
G.J. Spencer
W.D. Stanley
R. Stoker
G. Swett
G. Taylor
C.R. Thompson
M.W. Tolmasoff
F. Tonani
F. Tornatore
A.M. Truesdell
F. Tucker
P. Turnbaugh
T. Turner
R. VanKleeck
L. Vollintine
M. Walters
C.J. Weinberg
N.H. Weres
S.C. Weres
B.W. Westphal
D.E. White
T.E. Wilmsen
J.S. Wilson
P.A. Witherspoon
H. Wollenberg
W. Woods

We would like to extend particular thanks to the staffs of the Pacific Gas and Electric Company, the Lake County Planning Department and Aminoil USA who provided us with the key information which made this report viable and worth writing.

We would also like to specially thank those people who reviewed and commented on the draft versions of the major chapters of this report (4,5, 7,8,9, and 11):

D. Ashe	J.H. Howard
P. Atkinson	M. Nathenson
F. Brown	R. Schroeder
L.E. Capuano	M.K. Simmons
H.M. Castrantas	M.W. Tolmasoff
R. Celati	F. Tonani
G. Frye	A.H. Truesdell
J.R. Goldsmith	C.J. Weinberg
W.W. Harvey	P.A. Witherspoon

We made every effort to give the reviewers' comments due consideration and to revise the text accordingly. However, we did not make all of the revisions suggested to us and, of course, the final responsibility for the text as it stands falls upon us alone.

We would also like to thank J. Edgar who typed the bulk of this massive text, and P. Butler, N. Schorn and N. Parsons who typed the balance. S.R. Schwartz and J. Caiola collected and helped us collect the information upon which Chapter 9 is based. Without their contribution it probably could not have been written.

§1.5 And apologies

The reader will immediately notice that Chapter 2 doesn't exist. It was to have dealt with the geology of the Geysers and southern Lake County, but time and patience ran out before it was written. We would like to thank the people with whom we discussed those things anyhow, even though their aid came to nought. Such a geological review is much needed. We understand that the U.S. Geological Survey's Clear Lake Geothermal System study group intends to write such a review within the next year. Meanwhile, the reader

is encouraged to read the U.S.G.S. group's papers in the Proceedings of the Second United Nations Symposium on the Development and Use of Geothermal Resources (United Nations, 1975). Their reports as well as others which deal with the same subject have been included in our bibliography despite not having been cited. (A few other items which haven't been cited have likewise been retained.)

We apologize for the lack of polished final editing which is evident in some portions of the report. Constraints of time and patience precluded a complete final rewriting, and we were forced to limit ourselves to what we considered to be significant revisions. Some minor inconsistencies have probably survived our editing. In general, assume that Chapters 4, 11 and 12 are correct wherever they may conflict with other portions of the text.

Another problem with our presentation is that we haven't included nearly as many maps and figures as are really necessary in some parts of the report. If it were an easy matter to arrange for authorization to reproduce as many figures as we would have liked to use, we would have. However, it is not, and we did not.

Finally, things change so rapidly at the Geysers that some portions of this report are already out of date even as it goes to press. For example, Units 3 and 4 have recently been retrofitted to nearly eliminate their H_2S emissions, but this is spoken of in the future tense in Chapter 8. Thus, Tables 8.6 and 8.7 are already out of date, and the appropriate figures in them require downward revision. With the passage of months and years more and more of this report will also go out of date. We can only advise the reader to keep this in mind pending a future revised edition (should there be one).

CHAPTER THREE - ENERGY, ENTHALPY AND THE FIRST LAW

S3.1 Energy and power

Everyone has a fair idea of what energy is and can enumerate at least some of its various forms: heat, chemical energy (the energy in fuels), potential energy (that of water in a mountain reservoir), kinetic energy (the energy of a moving body), mechanical energy (work), electrical energy, and so on. Traditionally, the various forms of energy are measured in different units: kinetic energy, potential energy and mechanical energy are usually expressed in terms of ergs, joules, foot-pounds or horsepower hours, heat in terms of BTUs or calories, and electrical energy in terms of kilowatt-hours. The reasons for this are historical rather than physical. Actually, any form of energy may be measured in anyone of these units, and the multiplicity of units should not be allowed to obscure the basic equivalence between the various forms. In this report we stick to joules, kilojoules and kilowatt-hours throughout.

Power, which is measured in units like kilowatts and horsepower is not the same as energy. Rather, power is the rate at which energy is transmitted, converted or used up, and has the units of energy divided by time. For example, a Unit with a net power output of 55 megawatts (= 55,000 kilowatts) delivers 55,000 kilowatt-hours of electrical energy to the powerline per hour.

S3.2 Energy conversion and the First Law of Thermodynamics

Conversion of energy from one form to another is what the exploitation of geothermal energy is all about. First, the heat contained in the reservoir rock is transferred to the water contained in the reservoir causing it to boil. Now the heat is in the steam produced by the boiling. This steam goes up the well bore and through the pipelines of the steam collecting

system to the turbine inlet with essentially no change in its heat content. (If these various pipes were perfectly insulated there would be no change in the heat content at all; as it is, a little bit of heat escapes.) When the steam passes through the turbine, part of its heat content is turned into mechanical energy which the turbine shaft transmits to the generator, where the mechanical energy is converted into electrical energy. This electrical energy is transmitted at nearly the speed of light throughout the PG&E system to millions of lightbulbs, heaters, ovens and electric motors, all of which are, once again, devices for converting electrical energy to whatever final form the customer desires. That fraction of the heat content of the steam which is not converted to mechanical and thence to electrical energy is transferred to the cooling water in the condenser, and the cooling water carries it to the cooling tower which dumps it out into the atmosphere.

The First Law of thermodynamics merely states that energy can neither be created nor destroyed. That is to say, when 1 joule of heat leaves the rock, exactly 1 joule of heat shows up in the steam and so on. The usefulness of this observation in understanding powerplants and other engines is obvious. The usual rigorous statements of the First Law is:

"The energy of an isolated system remains constant."

(An isolated system is a theoretical idealization which is easily conceived of as something (anything) which is contained in a box whose walls are perfectly sealed and insulated and let through no heat or matter, do not deform, and block off electrical and magnetic fields.)

S3.3 Enthalpy or heat content

Unfortunately, a geothermal plant is anything but an isolated system. Rather than being enclosed in an everything-tight box, it has a huge steam flow through it. This makes it inconvenient to use the First Law as it

stands; i.e., rigorously thinking about energy flows in such a system is more trouble than it's worth. The nature of the difficulty is nicely illustrated by a single example: when water in the reservoir extracts heat from the rock and boils, it increases in volume by about a factor of a hundred. This means that the new steam must make room for itself by pushing pre-existing steam out of the way. This pushing constitutes a transfer of mechanical energy from new steam to old, and it is this secondary energy transfer which makes the First Law inconvenient to apply in its basic form.

The simplicity of the First Law is regained if, instead of thinking in terms of energy, we think in terms of another, closely related thermodynamic function: enthalpy.

Enthalpy is simply Greek for heat content, and this is the easiest way to think of it. In the case of mechanical and electrical energy there is no difference at all between energy and enthalpy. In the case of the heat in rock or liquid water the difference is very small and can usually be ignored. The difference is important only in the case of steam; here the enthalpy per kilogram under given conditions of temperature and pressure is simply the energy per kilogram plus the product of the pressure and the volume of the kilogram of steam.

Thus for our purpose, we may say:

"Geothermal plants convert a portion of the heat content (enthalpy) of steam to electrical energy, joule for joule."

S3.4 The boiling of water: vapor pressure and superheating

The so-called boiling point of water is the temperature at which water boils. It is a function of pressure; for example, it takes longer to cook something by boiling it in the mountains than at sea level because water boils at a lower temperature at the lower atmospheric pressure in the mountains.

A phrase equivalent to boiling point is saturation temperature, which is again a function of pressure. Actually, for our purposes, it is more convenient to think in terms of the "boiling pressure" (or saturation presssure or vapor pressure) which is a function of temperature.

Table A2 in the Appendix gives the saturation pressure of water as a function of the temperature, or if one prefers to read it backwards, the saturation temperature (i.e., boiling point) as a function of pressure. This information tells us more than just the saturation pressure as a function of temperature. It also allows us to determine the physical state of water under any combination of temperature and pressure. If water at any given temperature is at a pressure higher than the saturation pressure at that temperature, it is in the form of liquid water. If the pressure is lower than the saturation pressure, the water is in the form of gaseous steam. If the pressure is exactly the saturation pressure at that temperature, the water may be present as either liquid water or steam, or as a mixture of the two. Liquid water or steam which exists at the saturation pressure which corresponds to its temperature is called saturated. Steam which exists at a pressure lower than the saturation pressure at the given temperature is called superheated This word is used because one way to make superheated steam is to add heat to saturated steam at constant pressure (thereby raising its temperature and enthalpy). Another way of making superheated steam is by allowing saturated steam to expand without adding any heat. (This works only at temperatures below $238^{o}C$, which is something we will discuss at length later on.)

S3.5 Latent Heat

In order to turn saturated liquid water into saturated steam we must add heat. The amount of heat required to do this depends upon the temperature (or, equivalently, the pressure): at $100^{0}C$, 2255 J/g is required and at $238^{o}C$, 1773 J/g. When steam condenses, this heat is given off, and must be

removed if it is desired that condensation continue at constant pressure. Note that saturated steam at 100°C is no hotter than water at the same temperature despite containing more heat (i.e., having a higher enthalpy). For this reason, this heat of boiling or heat of evaporation is often called latent heat as contrasted to sensible heat.

CHAPTER FOUR - VAPOR PRODUCING GEOTHERMAL RESERVOIRS - REVIEW AND MODELS

S4.1 Introduction

This Chapter provides an up to date review of the publicly available knowledge about these systems. Both the Geysers and Lardarello are covered, but more consideration is given to the latter simply because much more information about it is available. This is because the geothermal system in the Lardarello Basin (Northern Italy) is structurally simpler, it has been extensively studied over its 50 year producing history, and much of this data has been published. In contrast to this, little data concerning the Geysers reservoir is presently publicly available. A number of ongoing, potentially precedent setting court cases seem to be the main reason for this. Nonetheless, we found enough to be available to enable us to describe the major features of the Geysers system as well. The smaller vapor producing systems at Travale (near Lardarello) and Kawah Kamojang (Indonesia) are also discussed.

However, we went beyond merely reviewing the literature and have constructed conceptual models of the two great systems which seem to account for most of what we know about them. These models are presented in Sections 4.7 and 4.11. Of necessity, this synthesis demanded some involved technical arguments, and these have made this Chapter the hardest to read. We ask that the nonspecialist reader bear with us and not give up on the whole report because of it; the going gets much easier in Chapter 5 and beyond.

S4.2 The Nature of the Reservoir Fluid

These reservoirs produce superheated steam, but it is easy to

demonstrate that the source of the steam must be boiling liquid water.

Nathenson (1975a) has estimated the total mass of water initially in place in the "Northeastern Zone" of the Lardarello Basin (essentially the Lardarello and Castelnuovo areas) to have been on the order of 9×10^{11} kg. (The method used is that of a P/Z vs. cumulative production plot which is generally used to estimate the reserves in natural gas reservoirs. It would be strictly applicable to a geothermal reservoir <u>only</u> if the reservoir contained only steam and no liquid water. His method of estimation is subject to question, but we accept the result for the purposes of the argument.) The area of the "Northeastern Zone" is about 56 km^2. He concludes that, if this mass of water was initially present as saturated steam at 241°C in rock of 5% porosity, the average reservoir thickness over this large area must be 19 km! This is clearly impossible, and no reasonable revision of the temperature and/or porosity makes it any more plausible. On the other hand, if one assumes that the water was initially present as liquid water at 241°C in 5% porosity water saturated rock, the estimated average reservoir thickness drops to a much more reasonable 333 meters.

Using data supplied by Ramey (1968) a similar argument may be constructed for the "upper reservoir" in the Big Geysers area which supplies Geysers Units 1 and 2. Ramey estimates that about 1.1×10^{11} kg of water was initially present in the reservoir. (The same questionable method, but again a reasonable result.) The initial pressure was about 13.4 bar. The wells included in this analysis cover an area somewhat smaller than 1 km^2, but let us assume that they drain a reservoir of 1 km^2 horizontal extent. Assuming that the reservoir fluid was initially saturated steam

at 13.4 bar and a reservoir matrix porosity of 5% gives an estimated reservoir thickness of 262 km! On the other hand, assuming liquid water saturated rock of the same porosity gives a much more reasonable estimated thickness of 2.6 km.

It must be stressed that such estimates of reservoir thickness depend critically upon the porosity that is assumed for the reservoir matrix. This question will be discussed in S4.9.

S4.3 "Pore water" and the "deep water table"

Although it is clear that most of the mass of water in these reservoirs must be in liquid form, the distribution of pressures within them indicates that steam is the continuous phase within most of the regions reached by drilling. This is evidenced by the fact that the bottomhole static pressures in any given area increase slowly and irregularly with depth. (See White, et al., 1971, Truesdell and White, 1973, and Celati, et al., 1975.) If liquid water were the continuous and, thereby, pressure determining phase, the pressure would rapidly increase with depth approximately following the hydrostatic pressure curve for liquid water at the given temperature. The nearly constant pressure indicates that steam is the continuous and, thereby, pressure determining phase. Such a constant pressure steam producing reservoir is generally called a vapor dominated reservoir. Contrary to common usage, this expression is not synonymous with our phrase vapor producing reservoir. It so happens that at Lagoni Rossi (Lardarello Basin), Travale, the Big Geysers and Kawah Kamojang there is a shallow liquid dominated zone adjacent to the vapor dominated zone, and wells drilled into the liquid

zones in the latter two areas produce steam just the same (see S4.4).

The fact of vapor dominance brings up the obvious question of just where the liquid water is. Truesdell and White (1973) suggest that the liquid water is present in two forms: a "deep water table" which lies below the reach of most or all wells, and "pore water" which is dispersed in numerous pores and fissures throughout the vapor dominated portion of the reservoir. That there was at least some pore water present even in the initially vapor dominated zone is essentially certain. In the pre-exploitation state there must have been a constant slow flow of condensate down from the top of the reservoir where some steam condenses because of heat loss to the surface. It is difficult to estimate just how much there might have been (or is at present), but the amount must clearly depend on the volume and nature of the porosity.

It is also likely that some of the liquid water present in the vapor dominated zone is retained by appropriate structural traps; in effect "cups" which keep it from draining down. Frye (1975) has reported that Aminoil's drilling in the Castle Rock Springs area has encountered two bodies of what seems to be just this sort of water. It is even harder to estimate how much water might be retained this way in any given reservoir.

Truesdell and White (1973) believe that the amount of pore water initially present may be enough to account for most or all of the early steam production from a given area, but that it is probably inadequate to account for many years of production (as at Lardarello). They suggest that after some period of time the pore water is largely depleted, and a large underlying liquid dominated zone (a "deep water table") becomes the

major source of steam. Such a body of water has not yet been identified in any of these areas, but its existence is highly plausible.

G. A. Frye points out (private communication) that the transition from a (boiling) liquid dominated zone with steam bubbles to a vapor dominated zone with pore water may be gradual rather than abrupt. The elevation of the transition zone may vary because of structural inhomogeneities. Areas of fine rock porosity may be expected to be water logged up to a higher level than adjacent areas of coarse porosity because of the effect of capillarity (the "wick effect"). Analogous effects are known to occur at the oil-water interface in petroleum reservoirs, particularly after the position of the interface has been changed by production. If the underlying water body in a geothermal reservoir has been lowered by the water being boiled off, such a jagged interface seems very likely.

Strictly speaking, the whole concept of a "water table" in a given body of rock presupposes hydraulic continuity throughout its pore volume and negligible capillarity effects. Such conditions are plausible if the porosity is associated with intense fracturing or highly permeable and coarsely porous rocks like sandstone or dolomite, but less plausible if the porosity is associated with fine intergranular pores or pores created by hydrothermal solutions.

There is also the question of scale. There may exist a continuous, more-or-less flat water table in an area of, say, 1 km^2, but it need not be continuous with the top of the liquid dominated zone a few kilometers away. Thus it may be appropriate to speak of the "deep water table in the Serrazano zone", but not of the "deep water table" of the whole Lardarello Basin. An extreme case is that of a "water table" which defines the

bottom margin of a structurally trapped steam bubble which is largely or completely below the elevation of the regional water table (see S4.7).

All in all, the nature of the "deep water table" in these reservoirs may be quite different from what is usually meant by a "water table", though it need not be in all cases. We continue to use the term, but caution the reader that "underlying water dominated zone" is what is really meant.

S4.4 "Overlying" Water Bodies

In most of the subareas of the Lardarello Basin there is no apparent connection between the vapor dominated zone and shallow groundwater (Celati, et al., 1975). The same appears to be the case in most of the Geysers area. However, at Kawah Kamojang, there is a body of groundwater which directly overlies the steam zone and is clearly in hydraulic contact with it (Hochstein, 1975). At Travale, there is a liquid dominated geothermal reservoir laterally adjacent to the vapor dominated reservoir and above it in elevation (Celati, et al., 1975, 1976). The distribution of bottom hole pressures of wells drilled into the two zones clearly suggests that the top of the vapor dominated zone is at the same elevation as the bottom of the liquid dominated zone and in hydraulic equilibrium with it (Celati, et al., 1975). The same situation exists in the Lagoni Rossi area on the Southwestern periphery of the Lardarello system (Ibid.). In both of these areas the permeable formations in which both the liquid and the vapor dominated zones exist outcrop at the surface near, but laterally offset from the geothermal reservoir. In each case the permeable outcrop is known to be an aquifer and/or geothermal reservoir recharge

area (Celati, et al., 1973, Celati, et al., 1976).

There also appears to be a liquid dominated zone in hydraulic contact with the vapor dominated zone in the Big Geysers (Units 1 and 2) and Sulfur Bank (Units 3 and 4) areas at the Geysers (White, et al., 1971, Truesdell and White, 1973). The former appears to directly overlay the latter, but this is not completely clear from the available information. It is possible that the liquid dominated zone here is also associated with a recharge area, as this portion of the field is lowest in elevation and closest to the course of Big Sulfur Creek.

The thickness of each of these overlying water bodies is approximately that required for the weight of the water to just match the steam pressure in the vapor dominated zone below. Hence, these systems are in approximate mechanical equilibrium. However, this equilibrium is clearly an unstable one. This is most readily seen in the case of Kawah Kamojang where the liquid dominated zone directly overlies the vapor dominated zone. The hydrostatic pressure at the base of a thin spot in the water body will be lower than the vapor zone pressure, and the hydrostatic pressure at the bottom of a thickening will be higher. The approximately stable state of this unstable system is probably maintained by a variety of dynamic mechanisms. Local thickenings probably flow downward as "tongues" of liquid water until they detach themselves from the main water body and drop down into the vapor zone. What appear to be just such "descending tongues" have been detected by geophysical methods at Kawah Kamojang (Hochstein, 1975).

Local thinnings in the overlying water body are probably stabilized by the lateral influx of water from surrounding thicker areas and the

condensation of steam coming from below. What appears to be such an area of local thinning has also been inferred to exist at Kawah Kamojang (Ibid). Between the water body and the underlying vapor zone proper in this area, there appears to be a zone of intermediate liquid and vapor content. Which phase is pressure determining within this "mixed" zone is not known. Significantly, immediately above this thinning in the overlying water body there is an area of intense surface manifestations.

The dynamic relationship of a laterally offset "overlying" water body to the vapor dominated zone in contact with it need not be fundamentally different from the case of the literally overlying water body discussed above. Probably, the only essential difference is that the convective motions of water and steam involve a large lateral component. In fact, the distribution of temperatures within the Travale system strongly suggests just such a convective motion with a strong lateral component (Celati, et al., 1976). The production of high enthalpy fluid from the water dominated zone (half or more steam) likewise suggests steam flow from below (Ibid).

S4.5 The General Hydrology of the Lardarello Basin and the Role of the Geothermal System

It is known that the steam produced at Lardarello originates from meteoric water (i.e., surface water). This is clearly evidenced by the fact that the deuterium content of the steam is equal to the average deuterium content of the rain and snow falling on that area (Celati, et al., 1973, Panichi, et al., 1974). Petracco and Squarci (1975) have analyzed the hydrological balance of the Lardarello geothermal system by

exploiting the fact that its areal extent is approximately coincident with the Cecina River's drainage. They concluded that the annual average amount of surface water which enters the geothermal system is between 8 and 11 x $10^6 m^3$. They conclude that the remainder of the steam produced comes from a deeper source of older meteoric water. It is conceivable that this "old" water might be recharged by influxes from other deep aquifers which may surround the "ultimate steam source," but it seems more likely that this "old water steam" production represents a depletion of the reservoir's preexploitation water content.

Celati, et al., (1973) and Panichi, et al., (1974) have explored the relationship between "recent" and "old" water contributions to the steam production by studying the patterns of hydrogen and oxygen isotope ratios in the area. They characterized the "recent" meteoric water as having a low oxygen-18 content and a high tritium (hydrogen-3) content. Both are characteristic of meteoric water less than about twenty years old. This is because tritium is a radioactive isotope with a half life of 12.3 years whose presence in the atmosphere is mostly (75% or so) due to the atmospheric detonation of thermonuclear explosives during the 50's and early 60's. The "old" steam is characterized by having no tritium in it and more oxygen-18 than the "recent" water. (Rain and snow water have the least oxygen-18 and most tritium of all.) The absence of tritium in the "old" water is due to its removal through radioactive decay. The high ^{18}O content is caused by isotopic exchange between the water and relatively oxygen-18 rich carbonate and silicate rocks over a long period of contact at high temperature.

It was found that the steam produced from the central area of the

Lardarello Basin is mostly derived from "old" water, while that produced from peripheral wells (and especially those near aquifer recharge areas) is predominantly "recent" water. There is a transition zone of steam of mixed origins in between. The change in the pattern of oxygen-18 concentrations with time (over 5 years) shows that the central old water dominated area is growing. This probably indicates that local accumulations of recent water which were initially present are being depleted by steam production. Just outside of this zone of increasing old water contribution is a (very) roughly concentric zone of decreasing old water contribution. This is interpreted as being due to an increased influx of shallow water into the edges of the geothermal system in response to a production related drop in steam pressure.

The Lardarello Basin geothermal system shows up as a great steep sided depression on the map of the regional isopiestic surface. (Where the isopiestic surface is found in permeable rock it is simply the ground water table. In areas where the aquifer is confined by an overlying impermeable caprock, the isopiestic surface marks the point to which the ground water will rise in a well drilled through the caprock into the aquifer beneath it.) The deepest contours on the most complete version of this map which is available (Celati, et al., 1976) go down to 600 meters below sea level in some places. (Less detailed isopiestic maps are presented in the two references quoted earlier.) If, indeed, it exists, the "deep water table" which is presumed to be the major source of steam lies at the bottom of this depression. However, this observation in no way implies hydraulic continuity between it and the surrounding regional water table. In fact, the steepness of the dropoff in the isopiestic

surface (between about 100 and 700 meters drop per kilometer horizontally) suggests a rather low permeability in any hydraulic connections which may exist.

S4.6 The Question of Initial Conditions

The model of a vapor producing reservoir so far developed consists of a vapor dominated steam zone which may contain some liquid pore water or structurally trapped water, and which overlies a more-or-less continuous water dominated zone which is probably the ultimate source of most of the steam produced. There is probably some recharge of surface water into the system, but this recharge is smaller than the rate of steam production and, therefore, the steam zone does not fill up. It probably increases in size in response to steam production. In some areas, notably near aquifer recharge areas, there are bodies of groundwater which are above the steam zone in elevation despite apparently being in contact with it. These are probably important reservoir recharge points. The presently most widely accepted view is that this was also the state of affairs before commercial exploitation. White, et al., (1971) first proposed this general model.

Besides the obvious argument of "what now, also before," this view is supported by geochemical evidence. The argument is that hot springs which receive their water from geothermal reservoirs differ in water composition according to whether the reservoir is of the water producing type or the steam producing type. Those hotsprings which are fed by hot water reservoirs generally produce water high in chloride. Chloride is present in all groundwaters to some extent and its relatively high

concentration in these reservoirs and the hotsprings they supply is due to the leaching of soluble salts out of the reservoir rock by the hot water over long periods of time. Near vapor producing reservoirs, however, hotsprings which are connected to the reservoir tend to be low in chloride (10 ppmw or less) and to be high in sulfate, ammonia and boric acid. This is the composition which is to be expected if the spring water consists largely or completely of steam condensate. Boric acid, ammonia and hydrogen sulfide are all common geothermal steam constituents because of their volatility, and sulfate is the product of the oxidation of H_2S by air. (A third type of hotspring is one which produces shallow groundwater which has been heated by conduction and is not chemically affected by the geothermal reservoir - if any - below it; rather, it has the same chemical composition as the cold groundwater in the area. See Panichi, et al., 1974.)

The opposing point of view is that the reservoir is initially filled with liquid water, and that the vapor dominated zone is produced by the boiling off of liquid water from the exploited area. This view has been proposed by Facca and Tonani (1961), and Ferrara, et al., (1970). The latter authors note that often a newly drilled well (at Lardarello) will initially produce a two-phase mixture, then wet steam and finally dry steam. On a few occasions, a newly drilled well will reach a hot water table and not produce at all initially. However, after some years of not producing, the well will suddenly begin producing a two-phase mixture which will turn to wet steam and finally dry steam. This sudden start of production can be correlated with steam production from nearby wells. The initial production of a two-phase mixture which eventually turns to dry

steam is precisely what one would expect to happen if the vapor dominated zone is created by boiling initially water saturated rock dry. However, this initially produced liquid water could be water lost during drilling in some (or even all) cases. The delayed production phenomenon was explained in terms of a well bottom being at a point in a body of hot water at which the hydrostatic pressure is initially greater than the vapor pressure at the temperature at that point. A subsequent water table drop in response to nearby production eventually lowers the hydrostatic pressure to the value of the saturation pressure, and the onset of boiling causes production to commence. We see no other explanation for this phenomenon. Its non-occurrence anywhere except at the edges of the field (Celati, private communication) is consistent with the general picture of a great depression in the regional water table which is growing in response to steam production.

These observations by Ferrara, et al., in no way prove that the reservoir was initially filled with liquid water; rather, they simply document the lowering of a local water table by steam production and suggest that it is possible that the vapor dominated zone might have been created by an initially water saturated portion of the reservoir having been boiled dry. All in all, we believe that vapor dominated regions did exist in these reservoirs prior to commercial exploitation, but also that they have probably considerably increased in volume since commercial production began.

There is also the not at all straightforward question of initial temperature. The chief problem here is that it is very hard to be sure that the bottomhole temperature (either static or flowing) has not been

affected by prior or current steam production either from the given well or from nearby wells. Given the extraordinarily high reservoir permeability values typical of the more highly productive zones of these systems, it is difficult to say just what "nearby" may mean. Fortunately, all such effects cause a temperature decrease; thus, one may consider the maximum bottomhole temperature inferred in any given area to be a minimum estimate of the pre-exploitation temperature in that area. If the region near the well bottom initially contained little or no liquid water and if it hasn't been exposed to large transcurrent steam flows, this minimum estimate of the initial temperature may be quite close to its actual value.

Tha maximum flowing bottomhole temperature that Nathenson (1975a) has inferred for well VC-10 in the Prata zone (near the Serrazzano zone) may fulfill these requirements. (See Figure 4.1.) At the very least, the inferred maximum bottomhole temperature of about 272°C soon after the well was drilled in 1963 is far above the 234°C saturation temperature corresponding to the initial shutin pressure of 30.5 bar reported by Sestini (1970). These values indicate strongly superheated conditions near the well bottom, and this may, in turn, mean that little or no liquid water was initially present (i.e., prior to the beginning of exploitation of the Serrazzano zone). We will assume an initial temperature of 275°C in this area for the purposes of our discussion, but with the recognition that it may have been somewhat higher. We doubt, however, that it could have been much higher because no temperature above this has ever been measured or inferred on the basis of wellhead conditions anywhere in the Lardarello Basin. (Temperatures well above 275°C have been inferred from observed isotope ratios in the steam and its "noncondensible"

gases, but these temperatures may well exist only in regions far below what is considered to be the reservoir. See Figure 4.1.) The same estimate is probably also valid for the adjacent Serrazzano zone, but its relevance to the other, more distant zones is uncertain.

The shutin pressure of well Travale 22 which taps the vapor dominated zone in that system also indicates a reservoir temperature of about 275°C if saturated steam conditions are assumed (see Figure 4.1). The hydrogeology of the system suggests that this is a valid assumption. However, it seems likely that steam production from the liquid zone in that system had already lowered the temperature in the vapor dominated zone before Travale 22 was drilled; therefore, the initial temperature may actually have been higher.

The shutin pressures of newly drilled wells at the Geysers are typically 30-35 bar (Ramey, 1968, A.H. Truesdell, private communication). Assuming saturated downhole conditions, this indicates a shutin temperature range of about 234 to 243°C. Truesdell and Frye (1977) suggest that it may sometimes be as high as 250°C, which corresponds to a shutin pressure of 40 bar. Saturated downhole conditions are essentially certain at the Geysers, but these values in and of themselves strongly suggest that they are due to prior steam production from other wells. (See S4.10.) As at Lardarello, some isotope ratios indicate higher temperatures (Truesdell and Frye, 1976, Craig, 1963), but the significance of these values is again unclear.

S4.7 A Conceptual Model of the Lardarello System

As has been emphasized by Cataldi, et al., (1963) the most highly

productive Lardarello-Castelnuovo and Serrazzano zones correspond to structural highs in the basement rock. Also, in these areas the evaporite formation is thin or absent. Hence, the impermeable (Argille Scagliose) caprock is slumped over the structural highs in the metamorphic bedrock in these areas. The very highly permeable productive horizons in these areas appear to be intensely fractured zones near (within a few tens of meters) the contact between caprock and basement. This arrangement of impermeable caprock draped over a buried structural high constitutes a structural trap; in other words, it is hydrologically equivalent to an inverted cup. As pointed out by our colleague R. Schroeder (private communication), the existence of a structural trap explains how a steam bubble can stably exist below the level of the regional water table: the steam bubble is trapped underneath the arched caprock above it in exactly the same way that oil and gas pools are trapped in petroleum reservoirs of the structural trap type (see Chapter 6 of Levorsen, 1967). The caprock keeps the steam in, and the surrounding groundwater out of the vapor dominated zone. It is likely that in the pre-exploitation state the interface between vapor and liquid was at the level at which the pressure of the steam was equal to the hydrostatic pressure of the water which was, in turn, determined primarily by the depth of the interface below the groundwater table in the surrounding aquifers. (The temperature distribution within the water also has an effect on the interface depth which is on the order of 10%.) The existence of such an approximate hydrostatic equilibrium between the steam and water in the reservoir and the surrounding regional water table in the pre-exploitation state does not necessarily presuppose highly permeable hydraulic connections between

the two, simply because of the length of time available for equilibration. The existence of just such a "steam bubble" has also been inferred in a structural trap in the Sarayköy-Kizildere geothermal field in Turkey (Tezcan, 1975).

No particular formation mechanism need be invoked for the vapor dominated zone if the structural trap model is accepted. The steam bubble simply formed when the liquid water which presumably initially filled the whole system got hot enough.

The top of the reservoir is at about sea level in the Serrazzano and Lardarello zones, and at about 300 meters above sea level in the Castelnuovo zone (estimated from Figure 1 in Celati, et al., 1975). The average elevation of the regional water table at the edges of the great and deep depression associated with the Lardarello system seems to be about 100 meters above sea level (estimated from Figure 2 in Panichi, et al., 1974). If we assume that the initial temperature in these areas was 275°C and that the initial steam phase consisted of pure water vapor, the initial vapor dominated zone pressure would have been 59.5 bar. This is enough to balance a column of about 600 meters of cool ground water. This suggests an initial steam water interface at about 500 meters below sea level, which is deep enough to allow an initially vapor dominated zone of 500 meters height to have existed at Serrazzano and Lardarello, and one of 800 meters height at Castelnuovo.

The smaller productive zones at Lago and Lagoni Rossi also lie over structural highs in the basement rock, and there are, once again, distinct highs in the contours of the reservoir top (Cataldi, et al., 1963, Celati, et al., 1975). Essentially the same model seems to apply in

these areas also, although with the difference that the evaporite formation is present there. The structural relations at Sasso and Monterotondo are not clear.

A particularly attractive attribute of this model is that the structural trap need not be completely steam and water tight for the steam bubble to persist. The initial position of the steam-water interface is determined only by the balance of steam pressure with hydrostatic pressure. If some steam leaks out, it will be replaced by fresh steam which evaporates from the underlying water table. If some water leaks in, it will heat up to reservoir temperature, percolate down to the water table, and displace an equal amount of water out from under the structural trap. (Water leakage is likely to be mostly through permeable formations connected to the reservoir; R. Celati, private communication.) The only requirement for the maintenance of a steady state is that sufficient heat be supplied to the geothermal system from below to replace the lost steam and heat up the infiltrating water. It seems likely that the "local accumulations of recent water" which are apparently being depleted in some parts of the Lardarello system by steam production (see S4.5) consist of shallow water which leaked into the reservoir relatively recently.

The structural trap model also allows a plausible explanation for the apparent steam production related influx of recent water which has been inferred in the peripheral zones of the system at Lardarello. Steam production lowers the pressure in the vapor dominated zone to below the initial hydrostatic pressure at the steam-water interface, and this causes "recent" water from surrounding aquifers to flow underneath the edges of the structural trap and into the system. It is unclear whether this

influx of water is a consequence of steam production from each of the zones separately or of production from the system as a whole. The distinction hinges upon whether or not the system as a whole may be considered to be a single hydraulic unit and may actually not be meaningful (see S4.3).

Whether the steam-water interface rises or falls in response to steam production will depend upon the degree of hydraulic coupling between the hot water body underneath the structural trap and the surrounding aquifers. If the coupling is good, the interface will rise because of the drop in steam pressure. If, however, the coupling is poor, the amount of water removed from the water body by boiling may exceed the rate of influx caused by the pressure differential, and the interface will drop. Available information seems to indicate that the latter is the case throughout most or all of the Lardarello Basin. Above we estimated an initial "deep water table" level of about 500 meters below sea level (this estimate is probably most accurate for the Serrazzano and Prata zones; see S4.6). Recent drilling has gone down to about 700 meters subsea in the Serrazano zone, and as deep as 900 meters subsea in the "central" areas between the major productive zones (Celati, et al., 1975). We conclude that the fact that the "deep water table" has not been found by drilling (except at the very edges of the system) requires that it have dropped at least several hundred meters since commercial exploitation began.

The fact that the "deep water table" was not found earlier when it was higher in elevation is consistent with the history of development and drilling practices. Most wells go no deeper than the "reservoir top" (first productive horizon). Prior to 1950, drilling was almost completely restricted to the very tops of the various structural highs plus small

areas at Sasso and Monterotondo (Celati, et al., 1976). Since that time drilling has gradually moved down the flanks of the various highs and, thereby, progressively increased in depth. Now the reservoir top has been reached throughout the Basin. Apparently, throughout the history of exploitation the "deep water table" has dropped rapidly enough to stay below the deepest wellbottoms at all times and in all zones. The fact that the reservoir top has been reached in all zones without having reached the "deep water table" indicates that the (probably) isolated "steam bubbles" which were initially present at the various structural highs have now merged into one continuous vapor dominated zone which extends throughout the whole Basin. (We mean "continuous" only in the sense of not being broken up by intervening liquid dominated zones; this "continuity" is very likely broken up by zones of low porosity and permeability.)

There remains the question of which rock types the water of the "deep water table" are to be found in. Most of it is probably present in the so-called "evaporitic formation" which is composed of limestone ($CaCO_3$), dolomite ($Ca_{0.5}Mg_{0.5}CO_3$) and anhydrite ($CaSO_4$). Dolomite is intrinsically highly porous, and limestone is notoriously susceptible to pore formation through removal by dissolution in water. These two rock types lie at the top of the evaporite formation immediately below the Argille Scagliose caprock. All three rock types are believed to be tectonically brecciated (crushed) in places, particularly near their contacts with the caprock (Cataldi, et al., 1963). Thus, wherever the evaporites are present, there is probably a highly porous and permeable stratum directly below the caprock. This stratum probably contains the bulk of the liquid water within the system.

As previously noted, the evaporites are thin or absent in the Serrazzano and Lardarello-Castelnuovo zones. The fracture zone at the contact between caprock and basement in these areas is extraordinarily permeable; however, the pore volume associated with these fractures is probably small. Therefore, their role is that of steam conduits rather than steam sources. They conduct steam from its points of origin on the flanks of the structural highs and in the lows between them to the well bottoms near the crests. Note that this is the situation only at the two major productive zones cited; in all other productive zones in the Basin the evaporites are present, and the steam produced may well be locally derived.

The question of porosity and water supply will be returned to in S4.9.

S4.8 The Size and Estimation of Heat Reserves

The geothermal steam resource consists of both water and heat. The problem of estimating reserves is different for each of the two.

The heat content of the reservoir is determined by its temperature, heat capacity and volume. If the temperature distribution within the reservoir can be estimated somehow, it is a simple matter to arrive at an estimate of the heat in place above any given temperature. However, an estimate of this sort is really an upper bound to the amount of heat that can actually be extracted, because some of the heat is undoubtedly contained in impermeable and/or dry rock.

The turbine inlet pressures at the Geysers are about 8 bar. It seems reasonable to define "high grade heat" as heat above the corresponding

saturation temperature of about 170°C. Essentially, this is heat which can produce steam at pressures above 8 bar, or, in other words, high enough for the present power plants to utilize without major turbine modifications and power cutbacks.

Brigham and Morrow (1974) have estimated the volumetric heat capacity of the rock matrix of the Geysers reservoir to be about 2,460 kJ/m^3 - °C. This also seems reasonable for at least the metamorphic basement rock at Lardarello. We further assume a total steam rate of 10 kg/kWh (which includes preplant releases), an average latent heat of boiling of 1,800 kJ/kg in the temperature range of interest, and that the steam is generated by boiling water which was initially in the reservoir. These assumptions lead us to estimate that about 1.37×10^9 kWh = 15.6 MW-years of electrical energy may be extracted per km^3 of rock for every °C of initial temperature above 170°C. If the initial temperature is 240°C, this amounts to about 1,100 MW-years/km^3, and if it is 290°C, about 1,900 MW-years/km^3.

As we shall see in S4.9, it is unlikely that there is sufficient water initially present to cool any but the coolest reservoirs down to 170°C. If there is sufficient recharge water to ultimately cool the reservoir to 170°C, exactly the same amount of heat will have been extracted, but the amount of steam produced will be less. This is because the recharge water will probably be cooler than the reservoir rock when it enters the reservoir, and some heat will go to preheat it up to reservoir temperature. This preheating requirement could reduce steam output by as much as a third. However, the preheating loss will probably be less than this because part of the preheating will take place in the cooler periphery of the reservoir, and at least some of the steam will be produced from water

initially in place.

The drilled areas surrounding Geysers Units 1 to 15 cover about 20 km^2. Assuming an initial temperature of 240°C, an average reservoir thickness of 1.5 km, and ignoring the preheating losses leads us to an estimate of enough heat initially in place to generate about 33,000 MW-years of electrical energy. This corresponds to about 37 years of continuous power generation by these power plants, which is an excellent agreement with the 30 to 35 year estimates for the productive life of the system given by industry.

The amount of heat which may practically be extracted from a given reservoir in the form of steam suitable for electrical generation is essentially limited to the high grade heat as we have defined it. Steam produced by boiling water underground at much lower temperatures has such low density and pressure that bringing it to the surface in commercially attractive quantities and with a reasonable flowing pressure drop would require an impractically large number of wells. (In other words, wells which produce steam from a reservoir below about 170°C must be considered to be stripper wells.) In contrast to this, a hot water reservoir exploited with full reinjection could be made to yield most of the heat which it contains above the reinjection temperature with little or no drop in production well temperature until it is nearly depleted (Nathenson, 1975b). The reinjection temperature is likely to be about 100°C in the case of a double flash system and about 50°C in the case of a binary system. This means that the amount of heat that could be extracted by producing hot water would be on the order of twice that which could be extracted by producing steam. Of course, the "low grade" portion of the heat extracted

by producing hot water would be converted to electrical energy at much lower efficiency. Nonetheless, flooding a steam producing reservoir with enough water to convert it into a water producing reservoir after its high grade heat has been exhausted might prove practical if the water is available (unlikely at the Geysers).

Under certain conditions it may be possible to estimate the heat content of that portion of the reservoir which contains liquid water from wellhead data alone. The data required are a series of stabilized shut in wellhead pressures determined at intervals over some period of steam production. These pressure values must be stabilized in the sense that each has been measured after all of the wells which tap the reservoir have been shutin long enough for their wellhead pressures to have reached constant limiting values. (The length of time required to obtain such data may, in practice, be shortened by suitable extrapolation of shorter shutin time data.) The attainment of such stabilized values requires that the reservoir have reached equilibrium in regard to the internal evaporation and condensation of steam, and the convective motion of any continuous water body which may be present. This equilibrium in turn requires that the temperature be approximately constant throughout that portion of the reservoir which contains liquid water, whether that water be pore water or a "deep water table." (We ignore the small increase of temperature with depth which is possible at mechanical equilibrium due to the finite weight of steam and compressibility of liquid water.) It does not require that any dry or impermeable portions of the reservoir be at the same temperature. Dry, permeable regions may be hotter but cannot be cooler, or else they would condense steam and heat up. Impermeable portions may be either

cooler or hotter, although the latter seems much more likely if the reservoir has been producing steam.

Under these conditions the wellhead shutin pressures will be a function of the temperature of the water bearing portion of the reservoir alone. More precisely, the stabilized bottomhole pressure may be calculated from the wellhead pressure, and the saturation temperature corresponding to the former will be the temperature of the water bearing portion of the reservoir. Thus,

$$T_{Res} = T_{Sat} \quad (P_{BH}).$$

This gives the reservoir temperature in the water bearing zone, T_{Res}. The rate of decline of this temperature with steam production (as determined from a series of stabilized pressures over time) gives the heat capacity of the water bearing portion of the reservoir:

$$C = -h_{vap} \ (T_{Res}) \ \frac{\Delta M}{\Delta T_{Res}} \ ,$$

where $h_{vap}(T_{Res})$ is the latent heat of vaporization of water at T_{Res}, and the other factor is the reciprocal of the slope of the values of T_{Res} plotted as a function of cumulative steam production in kilograms.

A slightly more complicated but essentially similar analysis has been presented by Brigham and Morrow (1974).

Once the total heat capacity is known it is a trivial matter to calculate the heat content above any given temperature. If the volumetric heat capacity of the rock is known, the volume of the water bearing zone may be obtained by simply dividing the total heat capacity by the volumetric heat capacity. This analysis ignores the heat content of possible dry zones within the reservoir. Ignoring them is, however, consistent

with obtaining realistic estimates of heat recoverable with present day practices, as this is limited to heat contained in water bearing zones.

Applying this analysis to the shutin pressure data for the "upper reservoir" at the Big Geysers presented by Ramey (1968) gives an initial temperature (i.e., pre-1961 temperature) of 192°C and an estimated steam source volume of about 1.7 km^3. Ignoring preheat losses (which may actually be important in this case), these figures correspond to about 510 MW-years of electrical energy recoverable from high grade heat, or enough to run Geysers Units 1 and 2 for about 21 years.

The chief practical limitation on this sort of analysis is that it requires that the water bearing portion of the reservoir act as an isolated system with no flows of mass or heat entering it from outside. Thus, if it happened to be the case that the "upper reservoir" at the Geysers receives steam flowing from the deeper portions of the system, the analysis as it stands would be invalidated. To be sure, one could theoretically wait for the <u>whole</u> system to equilibrate before recording the pressure, but this is clearly an impractical proposition.

We have specifically excluded temperature equilibration with possible dry zones within the reservoir from our definition of equilibration The reason is that thermal equilibration by heat conduction alone over distances of more than a few tens of meters is so slow that it wouldn't have much effect over the whole productive lifetime of the reservoir, let along during a shutin period. However, heat flow over distances of about ten or twenty meters <u>will</u> be significant over the productive lifetime of the reservoir, but not during a one month shutin period. Therefore, impermeable volumes of rock of this size in the water bearing zone <u>will</u>

contribute heat to steam production, but their ultimate contribution may not be properly accounted for in the pressure decline analysis outlined above.

The analysis assumes that there is a "water bearing zone" which doesn't change with time. In reality, portions of the reservoir will eventually boil dry, and this will affect the pressure decline. Brigham and Morrow (1974) have presented a discussion of pressure decline analysis similar to ours in which they have considered effects of this sort in considerable detail.

Finally, even if a reservoir is highly permeable and water bearing throughout, and is isolated from external mass and heat flows, shutin periods of reasonable length may not provide adequate data. This is because pressure buildup which involves the reheating of locally thermally depleted reservoir matrix by steam condensation can be expected to be a relatively slow process (Nathenson, 1975a). For example, consider a group of wells which have created a local thermally depleted zone around their bottoms after several years of production. A few days or weeks of shutin time may suffice for a temperature and pressure reequilibration within that portion of the reservoir that has been reached by drilling. However, full reequilibration between the cooler exploited zone and the hotter, deeper portion of the reservoir which has not yet been reached by drilling will require as much time as the wells have been producing or even longer. In other words, in the case of a large reservoir the rate of pressure decline is likely to be indicative of the heat reserves of just that region that has been reached by drilling rather than that of the whole system. Even the estimates for that small region will be rendered unreliable

by its interconnection with the rest.

Stabilized shutin pressure data for Unit sized blocks of wells at the Geysers do exist. If each Unit (or even pair of Units) drew on its own isolated reservoir these data would probably suffice for the estimation of heat reserves. However, we very much doubt if this is the case. All in all, we suspect that existing estimates of heat reserves at the Geysers are not much better than our own crude estimates presented above.

We do not know whether even this much is known about the heat reserves in the Unit 12 to 15 areas. The few days of production testing each well gets are probably adequate to establish its productive capacity, but seem too short to establish an adequate static pressure decline curve. The commitment of new Units may be based mostly on production capacity data backed by favorable past experience and geologists' estimates of the probable steam source volume.

Shutin pressure data also exists at Lardarello. However, unit sized blocks of wells are never shutin, and the static pressures observed at isolated shutin wells seem to be determined much more by the effects of nearby producing wells than by reservoir temperature. Therefore, this sort of pressure decline analysis appears to be impossible to apply in any meaningful way. New powerplants are sited mostly on the basis of the "stabilized production capacity" of the newly drilled wells. In other words, the initially rapidly declining flow rate is extrapolated to a (quasi) asymptotic final value, and the powerplant is sized on the basis of that value. Sestini (1970) briefly discusses this procedure.

S4.9 The Size and Estimation of Water Reserves

Here we will consider the amount of water which may be initially in place in these systems. This amount will largely be determined by the porosity of the reservoir rock. In a water saturated zone the volume of water present will be equal to the pore volume. In a vapor dominated region the amount of water will be less than the total pore volume, but how much less will be determined by the nature of the porosity. Fine pores and structural entrapments may initially be nearly completely water filled. Coarse pores and most fractures will probably be nearly free of pore water.

As discussed in S4.7, the important water bearing rocks at Lardarello appear to be the limestone and dolomite which are found just beneath the caprock in most areas. Based on oil field experience, their porosity can be expected to be between about 8 and 15%. In the absence of significant amounts of other highly porous rock types, it seems fairly certain that they contain most of the liquid water in the reservoir. Small amounts of highly porous "Macigno" sandstone are also present in some areas, but this rock seems to be important only as a conduit for water recharge rather than as a water supply.

The metamorphic basement complex, the anhydrite portion of the evaporite formation and the Argille Scagliose caprock all have negligible intrinsic porosity. Such porosity as these rock types may have is due mostly to fracturing and shearing. The porosity associated with discrete fractures is most likely between 0.5 and 1.0%, but may (rarely) be as high as 2%. The porosity of crushed rock is harder to estimate because it depends strongly on the distribution of particle shapes and sizes and upon the degree of cementation between them, if any. It can probably lie

anywhere between the range of discrete fracture porosities and limestone porosities, but is probably not higher than about 5%. (The preceding discussion is based mostly upon conversations with J. Howard of this Laboratory.)

The Franciscan formation which comprises the reservoir matrix at the Geysers also has negligible intrinsic porosity under ordinary circumstances. It is, however, known to be intensely fractured and sheared. Also, drilling chips brought up in the Castle Rock Springs (Unit 13) area show evidence of substantial secondary porosity. This porosity is apparently caused by hydrothermal dissolution of some of the minerals in the rock. It is believed that the feldspars are the minerals thus removed. In place of the dissolved away grains there are cavities of the same shape, and within the cavities there is a small amount of fine sand which is presumably an alteration product. The occurrence of rock of this texture appears to correlate well with the steam producing intervals. This is consistent with the ascription of its origin to hydrothermal dissolution. Unfortunately, core specimens suitable for porosity measurements are unavailable. However, the porosity does appear to be substantial. (The above is based on private communications from G. A. Frye.)

There doesn't seem to be any simple way to estimate the quantity of water initially in place from wellhead data alone. Shutin pressure data are useless for this purpose because they reflect only the temperature of the steam source and whether there is any liquid water left at all; 1 kg/m^3 will cause the same shutin pressure as 40 kg/m^3 at any given temperature if the well bottoms out in a vapor dominated zone. The only recourse seems to be the laborious one of mapping the distribution of

water and porosity in the reservoir by geophysical methods and drilling. We know for sure that this hasn't been done at Lardarello and very much doubt that it has been done at the Geysers. Geochemical methods may help answer this question eventually, but such methods are still very much in their formative stage. The relationship of shutin pressure to heat and water in place has been discussed in detail by Brigham and Morrow (1974). Martin (1975) has presented similar arguments, but with consideration of the effects of different effective permeabilities for water and steam in flowing two-phase mixtures included.

Truesdell and White (1973) have presented a thermodynamic approach to estimating the initial pore water content of the reservoir matrix in the vapor dominated zone at the Geysers. Basically, they postulate that the difference in temperature between steam at the wellhead (typically about 185°C) and static reservoir conditions (about 240°C) is due to cooling of the reservoir matrix by the boiling off of pore water. However, it is evident from Figure 4.1 that the observed power plant inlet steam conditions at the Geysers are completely consistent with the separation of steam from liquid water at about 234°C, and very nearly isoenthalpic flow from that point within the reservoir at which the separation occurs up to the surface. The only thing this says about the amount of pore water initially present is that there was enough to cool the reservoir from its initial temperature to 234°C with some remaining. Truesdell and White do not believe that the flowing pressure drop in the wellbores is great enough to cause this much of an isoenthalpic temperature drop. However, this argument ignores the possibility that a substantial isoenthalpic pressure drop may occur in water free feeding fractures near the wellbore.

Finally, if the steam originates as saturated steam at 185°C, it must enter the wellbore at a pressure no higher than the corresponding saturation pressure of 11.2 bar. This allows for only an unrealistically small pressure drop of about 3 bar in the wellbore. Also, the degree of superheating required to raise the steam enthalpy from that of saturated steam at 185°C to that which is observed at the plant inlets demands that most of even this small pressure drop be associated with isothermal flow in dry rock near the wellbore. This allows for essentially no pressure drop within the wellbore. We conclude that the argument by Truesdell and White is incorrect. (Also see S4.10 and 11.)

All in all, we doubt that any existing estimate of the water supply of either system is much better than a guess. Still, we can try to address the question of water sufficiency in an approximate manner.

Table 4.1 shows the amount of steam produced and the final temperature attained when an initially water saturated volume of reservoir rock of given porosity and initial temperature is decompressed (i.e., "produced") to our postulated abandonment pressure of 8 bar. It is immediately obvious that if the initial temperature is above about 240°C, nothing less water rich than water saturated limestone or sandstone will be able to surrender all of its high grade heat by boiling off initially present water alone. This means that those portions of the porous limestone and dolomite formations at Lardarello which were initially water saturated may have contained enough water to carry off half or more of their high grade heat content without recharge. On the other hand, there is almost certainly insufficient water present to extract all of the high grade heat from the metamorphic bedrock which probably contains most of the heat within the

system. This rock type probably has significant fracture porosity only where it contacts the caprock at the crests of the major structural highs. In these areas it is definitely in the vapor dominated zone and contains no liquid water. Further down, it may not even have any significant fracture permeability, let alone 15% porosity. Limestone and dolomite initially in the vapor dominated zone probably do not contain sufficient water either.

The intensely fractured and hydrothermally altered rock in the Geysers reservoir may conceivably have a porosity approaching 15%, but this is unknown. If the average porosity of the reservoir is substantially smaller than this, or if the pore volume was initially only partially water filled, a huge water shortfall could develop at some time in the future. In S4.8 we estimated the reservoir volume of the Unit 1 to 15 areas at the Geysers to be about 30 km^3, and the initial temperature to have been 240°C. About 270,000 hectare-meters of liquid water would be required to cool this volume down to 170°C. If this much water is (or was) present in the reservoir, fine. However, a shortfall which amounts to any significant fraction of this amount would be extraordinarily difficult to make up on the watershort Geysers area.

S4.10 The Maximum Enthalpy Phenomenon

The material in this section is the most speculative and nebulous of any in the whole Chapter. The reader beware.

As is evident from the base chart of Figure 4.1 (a Mollier Chart), the enthalpy of saturated steam has a maximum value of about 2,804 kJ/kg at about 234°C and 30 bar. The cause of the enthalpy decrease at higher temperatures is the increasing density and, in general, increasing resemblance

of saturated steam to liquid water as the critical point is approached.

The practical significance of the enthalpy maximum is that when saturated steam which is initially dry and above 234°C in temperature expands isoenthalpically (as by flowing down an insulated pipe), it enters the two-phase zone; i.e., some of it condenses to liquid water. The remainder of the steam remains saturated and follows the saturation curve to lower temperature and pressure. The enthalpy of the remaining (saturated) steam increases. The heat that goes into this increase is simply the latent heat of vaporization which is released by that portion of the steam which condenses.

What happens after the steam reaches the maximum enthalpy point depends on whether or not it still has the water which has condensed out of it with it. If it does, it will continue to follow the saturation curve to lower temperatures and enthalpies, and the heat that it surrenders will go to reevaporate some of the entrained water. If, however, it has somehow divested itself of the entrained water (say by leaving it behind in the tortuous channels in the permeable rock), it will leave the saturation curve and enter the superheated zone. Its temperature will continue to drop (though rather more slowly), but its enthalpy will remain constant at 2,804 kJ/kg.

It is evident from Figure 4.1 that the enthalpy of the steam entering each of the various Units at the Geysers is very near to this value. The spread of Plant Inlet enthalpy values is greater at Lardarello, but the average value is nonetheless close to 2,804 kJ/kg. As noted by James (1968) it is very hard to avoid the conclusion that the enthalpy of the steam produced by these reservoirs is determined by the maximum enthalpy

point. In other words, it appears that the steam flowing into the bottoms of the wells starts out as saturated steam at some temperature above 234°C and is approximately isoenthalpically expanded to below 30 bar pressure while still in the reservoir under conditions which cause the liquid water which condenses out of it to be separated from it.

The above argument nicely explains the maximum enthalpy phenomenon in regard to flowing steam; however, it does not explain why the static temperatures and pressure of these reservoirs often seem to be near the maximum enthalpy point or just above it. In the Lardarello area, the maximum enthalpy pressure of about 30 bar manifests itself as a maximum bottomhole pressure observed when new wells reach the steam zone or when wells are shutin. Pressures of 30 bar or slightly higher are most typical of wells shutin or newly drilled in areas some distance away from the large volume productive areas at Lardarello, Castelnuovo and Serrazzano (see Celati, et al., 1975). The more typical lower shutin and new well pressures appear to be due to the perturbing influences of nearby wells or to local thermal depletion (at Castelnuovo). A steam zone temperature of 239°C has been reported at Kawah Kamojang (Hochstein, 1975). Initial pressures between about 30 and 33 bar have been reported for several wells in the Happy Jack and Sulfur Bank areas at the Geysers (Ramey, 1968).

However, this "maximum enthalpy rule" is not universal; specifically, well Travale 22 had an initial static pressure of about 61 bar (Burgassi, et al., 1975). Celati, et al., (1976) cite a well in the relatively undeveloped area between Serrazzano and Lagoni Rossi whose initial pressure was over 40 bar. Shutin pressures of about 37 to 40 bar have also been observed in several other newly drilled wells in the Lardarello Basin

(R. Celati, private communication). Truesdell and Frye (1977) give a range of 240 to 250°C for bottomhole shutin temperatures at the Geysers. The latter temperature corresponds to a saturation pressure of about 40 bar. It is possible that these "anomalous" pressures may be due to the presence of non-steam gases in steam of 30 bar partial pressure (see S4.14), but we suspect that this is not the whole explanation. Thus it appears that the "maximum enthalpy rule" is only approximate in application to the Geysers and Lardarello, and that it seems not to apply at all to Travale.

There is no way to get around the fact that the steam must flow for the maximum enthalpy phenomenon to manifest itself. In the case of Lardarello, it is easy to make a tentative connection: the maximum enthalpy pressure in the few newly drilled areas where it has been found is the result of massive steam production from adjacent areas. The Kawah Kamojang system lies under an area of intense surface manifestations; it is possible that this natural steam discharge has been voluminuous enough to impose maximum enthalpy conditions on the reservoir. Both commercial production and (formerly) sizeable natural seepage can be invoked at the Geysers. Travale we won't even venture a guess about.

The details of how steam production might impose apparent maximum enthalpy conditions on the reservoir are not clear. However, some mechanism which allows steam at and below 30 bar to flow freely but imposes a rapid pressure drop to 30 bar on flowing higher pressure saturated steam would do the trick.

A plausible mechanism of this sort has been proposed by James (1968) in the context of a somewhat different argument: the water which condenses out of flowing saturated steam above 30 bar accumulates to the point that

it hinders the steam flow and causes an enhanced pressure drop. Superheated steam and saturated steam below 30 bar flow freely with very little pressure drop because of the assumed high innate permeability of the reservoir matrix. We stress that this is only an unproven hypothesis, but it does seem to explain the "static" maximum enthalpy phenomenon.

Consider, for example, an initially water saturated reservoir of 10% porosity and with an initial temperature of 265°C. If it were isolated from steam flows from other portions of the reservoir it would boil dry at 206°C and about 18 bar (see Table 4.1). However, if an essentially unlimited flow of 30 bar steam is available from farther back in the reservoir the same volume of rock will eventually stabilize at 234°C and 30 bar with some of the initial supply of liquid water still present. This water may be retained as pore water in a newly created vapor dominated zone or it may partially drain down. Given a very high permeability to dry steam at and below 30 bar, the boiling down of the liquid water will stop at 234°C and further production will be of 30 bar steam created by boiling more rock and water down to 234°C. The 234°C zone will spread as production continues, and new wells drilled at some distance from the producing ones may also encounter conditions near the maximum enthalpy point as a result.

This argument also explains the frequently observed shutin pressures of 30 to 40 bar. It is reasonable to expect pressures like this in initially higher pressures (i.e., hotter) zones which have already been cooled part of the way down to 234°C by the loss of 30 bar steam to adjacent previously drilled areas, but have not yet reached 234°C. It seems reasonable to expect that the last few bars of pressure drop to 30 bar would be the slowest simply because of the low pressure differentials available to

drive the steam flow under these conditions.

There is some evidence which suggests steam wells often do produce steam which is saturated and above 234°C near the wellbottom when first drilled. Sestini (1970) notes that wells in the Lardarello area frequently begin to produce at a very high rate which drops to a "stabilized value" after some months or a few years. This rapid decline of production rate may be due to a rapid drop of bottomhole temperature and pressure from initially higher values to those corresponding to the maximum enthalpy point. (Another explanation for this phenomenon is that it is caused by the exhaustion of liquid water initially present near the wellbore. Truesdell and White, 1973). It is also quite obvious from the appearance of the steam jets that newly drilled Geysers wells frequently produce wet steam. This might be due to the condensation of liquid water from steam which is initially saturated above 234°C, although it could also be caused by the condensation of steam near 234°C on the walls of the well. In the first case the steam would turn dry after the attainment of maximum enthalpy conditions near wellbore, and in the second case, after the wellbore was heated up by the steam flow.

The above arguments seem to be directly applicable to the Geysers where saturated steam conditions seem to prevail throughout most of the reservoir (see S4.11). At Lardarello, however, superheated conditions prevail throughout most of the productive horizon (see S4.12). If saturated steam at above 30 bars flows into rock of a higher temperature than it itself is, it will become superheated rather than dropping liquid water and following the saturation curve. This tendency will, of course, be counteracted by the cooling off of the rock by yielding its heat to superheat

the steam. Under steady state conditions, superheating would cease and the steam would follow the saturation curve down to 30 bar. A possible intermediate state which might occur is one in which the steam follows the saturation curve down to some pressure higher than 30 bar, and then leaves it and enters the superheated zone. The dynamic effect of this situation would be that the steam would flow freely at the pressure at which it enters the superheated zone and lower, but would be hindered at higher pressures. In practice, this phenomenon would probably manifest itself by shutin pressures near to but above 30 bar in some newly drilled wells as has been observed at Lardarello. This argument also suggests that the steam at the bottom of these wells should be superheated. It isn't clear from the available information whether this is the case in these instances. New wells drilled into liquid water bearing zones might still produce wet steam initially, however.

S4.11 A Conceptual Model of the Geysers System

The most striking difference between the Geysers and Lardarello systems is how much deeper the Geysers reservoir's vapor dominated zone is known to extend. Some of the Geysers wells are about 2.5 km deep, while the deepest commercial wells at Lardarello are only about 1 km in depth. (There are a few deeper experimental wells, but these seem to have gone completely through the reservoir and bottom out in low permeability basement rock.)

In S4.7 we explained the origin and extent of the known vapor dominated zone at Lardarello in terms of initially present local vapor dominated zones underneath structural highs which grew and finally merged as the liquid water beneath them was boiled down. We argued that a "deep

water table" level drop of only a few hundred meters was necessary to account for the size of the vapor dominated zone in that system.

The great depth of the vapor dominated zone at the Geysers and the moderate temperatures which are characteristic of that system (less than 250°C) suggest that an initial steam bubble (structurally trapped or otherwise) can account for only the very top of the vapor dominated zone. Geochemical evidence and the observation of superheated steam in early wells (Allen and Day, 1926) suggest that there was indeed a vapor dominated zone initially present at least in the Units 1 and 2 area. However, the great depth of the presently known vapor dominated zone can only be explained by the boiling down of the "deep water table" by two kilometers or more.

This general model was first proposed by White, et al., (1971) and expanded on by Truesdell and White (1973). These authors conceived of their model as being a general model of vapor producing reservoirs, but we feel it is much more applicable to the Geysers than to Lardarello.

They note that the pressure within the vapor dominated zone is far below hydrostatic pressure at those depths. Toward the bottom of the vapor dominated zone at the Geysers the pressure differential must be over 200 bar! They theorize that the surrounding ground water is kept out of the vapor dominated zone by an "incrustation seal" of minerals deposited along the top and sides of the reservoir. They propose that the top is sealed by silica and clay minerals which are formed by hydrothermal alteration of the reservoir matrix. The lateral margins are held to be sealed by calcite ($CaCO_3$) and anhydrite ($CaSO_4$) deposits. These minerals have the peculiar property that their solubility in water decreases with increasing temperature. (In the case of calcite, this is due to the conversion of

soluble calcium bicarbonate to much less soluble calcium carbonate by the loss of CO_2.) Hence, it is to be expected that any groundwater which enters the vapor dominated portion of the reservoir will precipitate its content of the two minerals very near to its point of entry and, thereby, reduce the permeability at that point. Facca and Tonani (1967) had proposed and discussed the concept of an "incrustation seal" in a more general context even earlier, and came to similar conclusions.

We disagree with White, et al., and Truesdell and White in regard to precisely when and how the vapor dominated zone formed. They believe that it was formed by water loss via natural steam leakage prior to commercial exploitation. We prefer the theory that only the very top of the system was vapor dominated at the beginning of exploitation, and that it was the much greater commercial steam withdrawals that extended the vapor dominated zone to the present great depth.

The fact that the enthalpy of the Geysers steam is typically very near to 2,804 kJ/kg strongly suggests that the steam is separated from the last of the liquid water at approximately maximum enthalpy conditions and relatively near to the wellbore (see Figure 4.1). In other words, there is liquid water at 234°C near to the wellbottoms in the sense that the steam follows a nearly isoenthalpic thermodynamic path from where the last of the water is to the wellbottoms. (Ordinarily, isothermal flow is to be expected when steam flows through reservoir rock. The reason for this apparent exception is discussed in S4.12.)

The existence of liquid water near the wellbottoms at the Geysers is also suggested by another observation: many of the wells there must be allowed to discharge freely into the atmosphere for a period of time after

having been shutin in order to clean an accumulation of liquid water and loose rocks out of the wellbore. (We stress that this behavior is characteristic of wells that have been on line and producing steam for years. It shouldn't be confused with the frequently observed production of wet steam from newly drilled wells.) A substantial amount of liquid water is involved. Enough accumulates in the (uncased) bottom of the well to fill it to some depth, and this causes rocks and dirt in the walls of the wellbore to be loosened. It is primarily to keep these rocks and dirt from entering the powerplant that these wells must be cleaned out before being reconnected. Cooling of the steam as it flows up the wellbore clearly isn't the cause of this condensation, since the water accumulates while the wells are shutin.

We believe these accumulations of liquid water to ultimately be due to the expansion of the steam in the immediate vicinity of the wellbore and within it. This expansion is accompanied by a temperature drop which causes a local decrease of rock temperature after some period of production. After the well is shutin, the pressure build up involves replacement of this heat by steam condensation, and the resulting condensate accumulates in the wellbore. We doubt whether this flowing temperature drop would be large enough to cause condensation after shutin if the flowing steam were significantly superheated near the wellbottoms.

Finally, Truesdell and Frye (1977) have presented an elegant geochemical proof of the coexistence of steam and water near the bottom of a well in the Castle Rock Springs area under shutin conditions. They noted that the oxygen and hydrogen isotope ratios in the steam change when the steam flow is increased from a "bleed" volume to a significant fraction

of the well's production capacity. After the isotopic composition of the larger flow has stabilized (typically after one or two hours), its relationship to the isotopic composition of the "bleed" steam is that of liquid water to steam with which it is in equilibrium at the inferred bottomhole temperature. Thus, the "bleed" steam appears to come from the steam phase which exists in the vapor dominated zone under static conditions, while most of the steam produced at the larger flow rate is derived from boiling pore water.

The presence of pore water throughout most or all of the reservoir is consistent with our hypothesis of a "deep water table" which has been lowered by two kilometers or more. Given the proper sort of reservoir rock, it seems reasonable to expect abundant pore water if the rock had been immersed in water up until a few years ago. Such an enormous drop in water level over such a short time poses no particular conceptual problem. One need only postulate that most of the water initially present is still present in fine, slow draining pores, and that the transition to vapor dominance required the removal of only a small amount of pressure determining "free water" from relatively small volume fractures. This may be thought of as a "cracked sponge" texture: boiling removes the water from the "cracks," but leaves the bulk of the "sponge" nearly saturated.

More so than any other system, the Geysers system seems to be thermodynamically dominated by the maximum enthalpy principle. The obvious question is: how can 30 bar steam flow freely through a reservoir matrix which contains pore water when we have postulated that it is precisely liquid water in the matrix that reduces its pressure to 30 bar? The answer is that the bulk of the pore water need not be in the way of the flowing

steam. For example, the pore water may be present largely within the bulk of the "sponge," while the steam flow (and water condensation, if above 30 bar) is in the "cracks." Alternatively, one may imagine that the system consists of some number of smaller interconnected reservoirs. Within each one, abundant pore water is present and steam flows freely through large, well drained fractures. However, the water which condenses from flowing saturated steam above 30 bar accumulates in the fractures connecting the sub-reservoirs and leads to the creation of maximum enthalpy conditions "downstream."

The latter hypothesis seems to agree with the little that is publically known about the geological structure of the system (McNitt, 1963, Garrison, 1972, McLaughlin and Stanley, 1975). The structure is known to be dominated by a series of parallel thrust faults which dip steeply towards the Northeast and under Cobb Mountain. The porous reservoir matrix is probably the sheared material along these thrusts. It may be that there is one massive volume of fractured material throughout the system. On the other hand, since there are numerous thrust faults, there may be a whole series of thin, sheetlike reservoirs parallel to one another.

S4.12 The Superheating of Geothermal Steam

It is convenient to distinguish between two sorts of superheated steam at pressures of 30 bar or lower: that with enthalpy below 2,804 kJ/kg and that with higher enthalpy. As was first pointed out by Facca and Tonani (1961), the first type of superheating requires only that steam which is initially saturated at some pressure below about 30 bar be isoenthalpically expanded, say by flowing up the wellbore. (This thermodynamic

process would be represented by a horizontal straight line on Figure 4.1.) This simple observation is important historically, as it demonstrates how simply superheated steam could be made by boiling liquid water and puts to rest earlier statements to the contrary.

It is evident from Figure 4.1 that many of the powerplants at Lardarello take steam with an enthalpy significantly above 2,804 kJ/kg. One well, VC-10, has been observed to produce steam with an enthalpy as high as 2,950 kJ/kg. Clearly, enthalpy values greater than 2,804 kJ/kg cannot be produced by isoenthalpic flow starting with saturated steam. The simplest and most widely accepted explanation of this greater degree of superheat is that the steam gains additional heat from a region of dry rock near the wellbore through which it flows (Goguel, 1953, James, 1968, Truesdell and White, 1973). This dry zone is created by the boiling off of initially present liquid water by steam production. Initially, the temperature within this dry zone will be approximately constant. If only a small amount of pore water was initially present, the temperature within the dry zone will be only slightly lower than was the initial reservoir temperature. Steam flowing through the dry zone will initially follow an <u>isothermal</u> (i.e., constant temperature) thermodynamic path. It is obvious from Figure 4.1 that following an isothermal line will cause the enthalpy to increase. After the steam reaches the wellbore, it flows to the surface at approximately constant enthalpy and with some temperature drop. (There is actually a small drop in enthalpy; see below.) Such a thermodynamic path which connects the maximum enthalpy point and the "Average Lardarello P.I.C." point is drawn in dotted lines in Figure 4.1. It is clear that any one of the superheated steam points plotted in Figure

4.1 may be reached by such a combination of isothermal and isoenthalpic flow.

This explanation has an empirically testable corollary (James, 1968). Consider a reservoir in which a completely dry zone has been established near the well bottoms by production. As production continues, the boiling front recedes farther and farther from the well bottoms, and the steam has progressively farther to go to reach the wellbottoms. This means that, for a given flowrate, the pressure drop between boiling front and wellbottom will progressively increase and, if a constant wellhead pressure is desired at a constant flowrate, more wells (makeup wells) must be drilled. What this does is to reduce the flowrate per well, thereby reducing the pressure drop in the wellbore to compensate for the increasing pressure drop in the reservoir. It is easy to see that such an increase in flowing pressure drop within the reservoir with constant wellhead pressure will cause the temperature and enthalpy of the steam delivered to the powerplants to increase: the "wellbottom" point moves farther up along the isotherm it is on, and the "P.I.C." point moves farther up the isobar that it is on. Just such a progressive rise in wellhead temperature and enthalpy is well documented at Lardarello in the period up to about 1966 (Sestini, 1970).

Essentially the same argument holds if the drop in bottomhole pressure at constant wellhead pressure (and falling production per well) is due to the thermal depletion of the ultimate steam source rather than to a receding boiling front. This case has been exhaustively studied by Brigham and Morrow (1974).

As the dry rock superheats the steam which flows through it, its own enthalpy and temperature must decrease. As more and more heat is extracted

from the dry rock by the flowing steam, the thermodynamic flow path of the steam will deviate further and further from being isothermal. When a steady state is finally reached and the steam and rock are in thermal equilibrium at all points, superheating will cease and the steam will follow a path of constant enthalpy. Thus, we see that isothermal and isoenthalpic flow are only idealizations in practice; the actual flow through the dry zone will actually be somewhere in between.

The "isoenthalpic" flow up the wellbore is also an idealization. Actually, at least some of the steam's heat content must be converted to gravitational potential energy as it flows up the wellbore simply because of the gain in elevation. Some heat must also be lost by conduction out of the wellbore. This heat loss will decrease with time as the material surrounding the well heats up (Nathenson, 1975a).

The degree of superheating attainable clearly depends upon the temperature of the dry zone and the degree of pressure drop the flowing steam undergoes within it. The temperature will, in turn, depend on the initial temperature and the amount of liquid water initially present. The pressure drop will also depend in part upon the size of the dry zone. The rate at which the dry rock is cooled down by the flowing steam and the rate at which the degree of superheat decreases will also be determined by the size of the dry zone. We see that the differing steam enthalpy values observed at the Geysers and Lardarello are consistent with the different conceptual models of the two systems which we have proposed. The substantial degrees of superheat typical at Lardarello are consistent with our hypothesis of large initially vapor dominated zones which probably did not contain very much pore water. The enthalpy values of just around

2,804 kJ/kg typical of the Geysers are consistent with our hypothesis of abundant pore water and only a small dry zone near the bottom of each well or none at all.

S4.13 The Limited Efficiency of the Conversion of Geothermal Heat to Work

We have discussed how the enthalpy maximum phenomenon makes steam producing geothermal reservoirs behave as though their initial temperatures were no more than about 234°C regardless of how much higher they may have actually been. This flowing temperature drop causes a serious decrease in theoretically attainable thermodynamic efficiency. (See the next two Chapters.) If the reservoir is initially above 234°C, it is possible (although impractical) to deliver steam at a higher temperature and a pressure above 30 bar by simply reducing the production rate per well to a low enough value. However, steam produced in this way would inevitably be wet when it entered the turbine, and about 20% of it would condense inside the turbine. These operating conditions would erode the turbine blades so rapidly that no one would even consider trying this. The natural steam superheating observed at Lardarello does result in the production of somewhat higher enthalpy steam, but this enthalpy increase really isn't large enough to change matters much.

Exactly the same constraint applies to the maximum temperature of the turbine usable steam which may be produced by flashing geothermal brines. Enthalpies somewhat above 2,804 kJ/kg may be obtained by flashing very high salinity brines (such as those at Niland and Brawley, CA, and Ceasano near Rome) simply because of the salt content, but, once again, this is at most a minor improvement.

The only way to get beyond this barrier is to alter the thermodynamic cycle in some fundamental way. An optimized binary cycle may offer a suitable alternative in the case of the hot water resource, but presently known binary cycles are far less efficient than even the existing units at the Geysers and Lardarello.

Another possibility is to devise a turbine that can take wet steam or even better, a mixture of liquid water and steam. This would actually be the optimal technology for exploiting hot water at any temperature and the concept is being actively pursued under the name total flow device. However, this is again nowhere near commercial application.

Finally, one could attempt to superheat steam by supplying heat from some nongeothermal source. Particularly attractive is the thought of a solar-geothermal hybrid system which would require a far smaller area of solar collector per kilowatt than a purely solar system and thereby would be considerably cheaper. Once again, this is a rather distant prospect, but it is so attractive thermodynamically that we believe that it may well become the first technology to commercially convert solar heat to electrical energy.

S4.14 The Effect of the Non-Condensible Gases

The chief effect of those non-steam gases which are relatively water insoluble (i.e., all except NH_3, HCl and HF) is to increase the pressure of the steam phase. This means that the static pressure of the reservoir may be greater than the steam saturation pressure corresponding to the reservoir temperature, and that different areas in the reservoir may be in dynamic equilibrium with each other despite containing liquid water at

different temperatures. (Differences in elevation can, and probably do, cause this too.)

The effect of the noncondensible gases can be considerably greater than the mere weight concentration in the steam as determined at wellhead might suggest. For one thing, the pressure raising effects of the various gases per kilogram vary approximately inversely to their molecular weight. In particular, hydrogen (which is the lightest gas) will have about 22 times the effect per kilogram that carbon dioxide (which is the heaviest and most important) will have.

More subtle and probably more important is the fact that the amount of gas that is observed in the steam at the wellhead is probably considerably less than was present in the steam phase in the reservoir prior to exploitation. This is because that portion of the steam which is derived from boiling water mixes with that which was originally present and dilutes the latter's gas content. Consider, for example, a reservoir of 5% porosity which is initially at 275°C and has one-fifth of its pore volume initially filled with liquid water. If the steam produced contains 4% by weight of CO_2 (which is typical of the Lardarello area), the initial steam phase must have contained 23.1 weight % CO_2, or enough to raise its initial pressure from 59.5 bar to about 67 bar.

As the initially present steam phase is depleted, the gas content of the produced steam will go down. In particular, once most of the steam produced is being derived from the boiling of a continuous deep water body, its gas content should approximately stabilize at just that which comes out of the water body. The decrease in gas content will be reflected in the shutin pressure decline curve. The depletion of the gas initially present

in the vapor phase will show up as an initially very rapid decline in shutin pressure with production. The curve will then stabilize at a lower rate of decline which reflects the temperature decline of the producing zone. Just such a change of slope is evident in the shutin pressure decline curve for the upper reservoir at the Geysers presented by Ramey (1968).

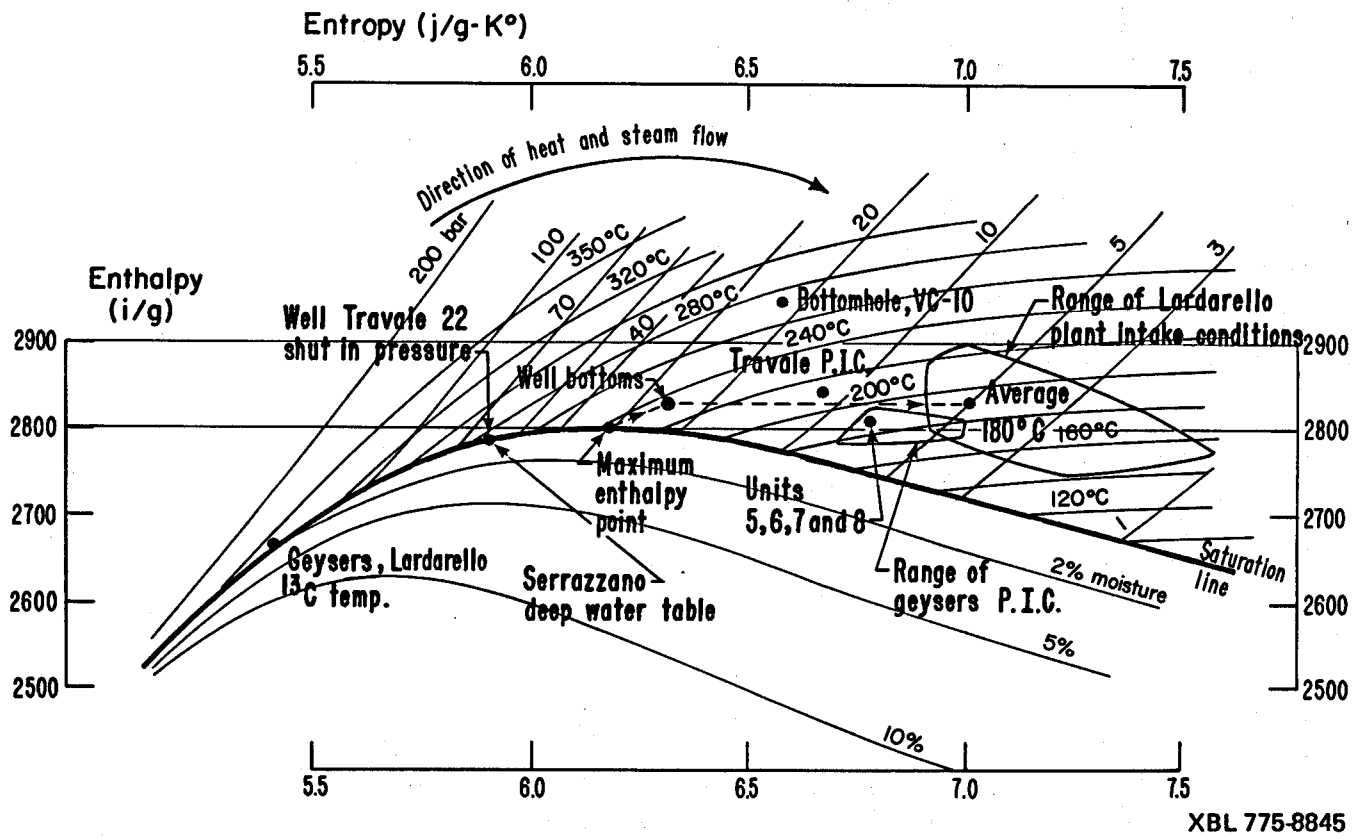

Fig. 4.1 Thermodynamic reference points for steam producing geothermal reservoirs.

NOTES TO FIGURE 4.1

The base chart is a tracing of a portion of the Mollier (H,S) diagram for steam included with the steam and air tables of Irvine and Harnett (1976).

"Geysers ^{13}C Temperature." The carbon-13 temperature is the temperature value which corresponds to the observed ratio of carbon-13 concentrations in the CO_2 and CH_4 contained in a given steam sample. Because isotopic re-equilibration between the two gases is slow, the temperature so determined serves as an estimate of the temperature at the place where the gases came from. The value for the Geysers is quoted from Craig (1963).

"Lardarello ^{13}C Temperature." Panichi (1976) has presented CH_4/CO_2 ^{13}C ratios for twenty-five steam samples from Lardarello. The indicated temperatures range from about 220°C to about 380°C, but the greatest concentration of points is centered at about 340°C.

"Well Travale 22." This point represents the 60.6 bar (60 atm) initial shutin pressure reported for this well by Burgassi et al. (1975), corrected to 58.5 bar to account for the effect of 9% (by weight) of non-steam gases. The gas fraction has been assumed to be predominantly CO_2 for the purposes of calculation. (Dilution of gas by pore water-derived steam ignored.)

"Serrazzano Deep Water." This point represents the small amount of 275°C steam-water mixture produced from a depth of about 2800 meters by an experimental well in the Serrazzano zone of the Lardarello Basin. The downhole temperature was certainly higher than this, but is not known.

The water could either be deep reservoir fluid or heated drill water.

"Maximum Enthalpy Point." The maximum enthalpy of saturated steam is about 2804 kJ/kg, and is observed between about 231°C and 239°C and the corresponding saturation pressures of 28.5 bar and 32.9 bar (from tables of Irving and Harnett, 1976).

"Bottomhole, VC-10." VC-10 is a well in the Prata zone (near Serrazzano) which was drilled in 1963. The point plotted represents the well bottom conditions of highest well bottom temperature achieved during flow tests performed soon after drilling. These conditions were calculated by Nathenson (1975a) on the basis of wellhead test data.

"Travale P.I.C." Represents the steam conditions at the plant inlet of the Travale powerplant as reported by Ceron, et al. (1975). This plant is completely supplied by well Travale 22.

"Range of Geysers P.I.C." Range of steam conditions at the plant inlets of the eleven Geysers Units. Quoted from the technical presentation given by P.G.&E. to the Lake and Northern Sonoma County Air Pollution Control Districts in March 1976. Only units 1 to 4 receive steam below 7 bar pressure. Unit 11 receives the highest enthalpy steam.

"Range of Lardarello P.I.C." Approximate range of incoming steam conditions at the various powerplants in the Lardarello Basin except for Lagoni Rossi 1, which takes steam at 156°C and 5.2 bar and generates 3.5 MW. Pressures below 4 bar only at Castlenuovo V.C. and Lago 2. "Average" point refers to power weighed average temperature and pressure for all plants in the Lardarello Basin plus the Travale plant. Data from Ceron,

et al. (1975).

The dotted line represents an approximation to a typical thermodynamic path that the steam follows from that point in the reservoir at which it is last in contact with liquid water to the power plant inlet. (See S4.11 and 12.)

TABLE 4.1

Final Temperature and Steam Yield for
Initially Water Saturated Reservoirs
Producing Steam to 8 bar Final Pressure

Initial Temp. (°C)	Porosity 0.01	0.02	0.05	0.10	0.15
190	183 8.8	176 17.5	170 24.2*		
215	208 8.5	202 16.9	181 42.4	170 56.5*	
240	234 8.1	227 16.3	208 40.7	176 81.4	170 89.9*
265	259 7.8	253 15.5	236 38.8	206 77.6	175 116.4
290	285 7.3	280 14.6	264 36.6	236 73.2	208 109.8

*Some liquid water remains.

Legend: Final Temperature (°C) 183
Steam produced (kg/m^3 of reservoir) 8.8

NOTES TO TABLE 4.1

The entries in this table were calculated by a simple heat balance procedure. Those values which correspond to a superheated steam/dry rock final state were calculated using the equation

$$(T_f - T_i)\ C\ (1-\phi) + \rho_{ws}\ (T_i)\ \phi\ [h_s\ (T_f, 8\ \text{bar}) - h_{ws}(T_i)] = 0$$

where T_i and T_f are the initial and final temperatures, C is the volumetric heat capacity of the reservoir rock, ϕ is the porosity, h_s is the enthalpy of steam at given T and P, and h_{ws} and ρ_{ws} are the enthalpy and density of saturated water at the given T. C is taken equal to 2460 kJ/(m^3 - °C). This equation is first solved for T_f using an estimated value of h_s. A new value of h_s is then obtained from the steam table and the equation is solved again. This is repeated until T_f and h_s stop changing, which generally takes no more than three iterations. The total amount of steam produced in this case is simply $\rho_{ws}\phi$.

In those cases in which some liquid water remains after decompression to 8 bar the final temperature is simply 170.42°C, the saturation temperature at 8 bar. The amount of steam produced was calculated by solving the equation

$$S\ h_{vap}\ (170.42°C) + (1-\phi)\ C\ (170.42°C - T_i) + \rho_{ws}(T_i)\ \phi\ x$$
$$[h_{ws}(170.42°C) - h_{ws}\ (T_i)] = 0$$

for S, where S is the amount of steam produced per cubic meter of reservoir and h_{vap} is the latent heat of evaporation at the given T.

CHAPTER FIVE - GEOTHERMAL DRILLING AT THE GEYSERS

S5.1 Introduction

Briefly, a well is drilled by a rotating bit that grinds the rock. The bit is connected to the drill rig by a string of pipe called the drill string. Power is transmitted to the bit by the drill string either by actually rotating it or by pumping mud through it to a downhole turbine or displacement motor. The power for this is provided by engines on the surface. Once the rock has been broken up by the bit into cuttings, these are carried back to the surface by the circulating medium, which can be mud, air or water.

Present day wells at the Geysers range from about 180 to 3100 meters in depth. The maximum depth appears to be limited by economic considerations rather than by the size of the reservoir or by technology.

In this Chapter we outline geothermal drilling and field development practices at the Geysers. The emphasis is on the environmental impacts which are associated with them and how these may be mitigated. The changes that are now taking place as development is spreading into Lake County are also addressed.

While reading this Chapter, the reader should bear in mind that drilling and field development practices at the Geysers have changed with time as experience has accumulated. The overall trend of these changes has been toward more careful site selection and more environmental protection in general. Many of our grim observations apply only to the older wells and areas in the field, rather than to the newer ones. Most of the developers state that they are now using the safest and environmentally soundest techniques available. We have chosen to discuss dubious past practices because

some of the hazards and environmental impacts they have created are of a continuing nature.

The difficulties and environmental hazards associated with geothermal drilling and field development at the Geysers are to a large degree due to the extraordinarily rugged topography and difficult geology of the area. The geological difficulties include areas of tectonically sheared and incompetent rock and numerous dormant landslides. The topography of many of the potential geothermal development areas in Lake County is much gentler and safe and stable drillsites generally appear to be available. Therefore, many of the problems which have been encountered at the Geysers will be milder or even completely absent in many areas in southern Lake County.

Finally, the various steam producing companies at the Geysers differ to some extent in their practices. Our description most closely reflects the drilling practices of Union and Aminoil which are, at present, by far the biggest operators. In some passages we have noted differences between their practices. In most places, however, we have been unable to, and have merely presented a description of "typical" practice. The reader should not assume that some practice is either universal or limited to any one company unless this is explicitly stated. In particular, a statement that company A does something does not mean that company B does or does not do the same; it usually means that we haven't asked company B about it.

Throughout this Chapter undated citations refer to personal communications from the individuals cited during the period of writing during the summer and autumn of 1976 or to comments we received on the draft which we circulated in the winter and spring of 1977.

S5.2 Exploration and Field Planning

Although geologic surveys can determine the possibility of a geothermal resource existing in a given area, only actual drilling can prove the presence of steam. Because exploratory wells are in a geologically unknown area, they are drilled wildcat and great care must be taken to prevent accidents. By regulation, drilling is prohibited in areas containing fumaroles, geysers, hot springs, etc. except by special permit. Even with surveys, actually making connection with the geothermal resource is difficult. Few exploratory wells do, as few as one in forty by one estimate (Turner). One new resource location technique, mercury sniffing, involves detecting anomalous amounts of mercury that have reached the surface. This is cheaper than current methods, but its resolution does not appear to be much finer. Another technique uses acoustic reflections to detect subsurface fracture planes. Through redundancy, the Vibraseis can counter the seismic noise problem. This method is able to easily detect features 50 m across and separted by vertical distances as small as 30 m (under the best conditions, about 17 and 19 meters, respectively). Unfortunately, this technique is very expensive ($2500 per linear km) and is best at "seeing" shallowly dipping features (Demlinger).

In exploratory drilling drill sites are arranged to test a large area. They are spaced to form a triangle if the area is totally undeveloped. If there is a proven resource area adjacent to the one under exploration, only two exploratory wells are necessary. They are placed at some distance from the producing area in a line about parallel to the edge of the field (Capuano). This practice is, however, not necessarily adhered to by Union.

Once the geothermal resource has been found in sufficent amount, the next step is to develop the field for production. A power plant in the

Geysers requires about 15 wells to generate 110MW. The plant is designed to last 30 years and it is expected that over this time period the production of the wells will decrease. To counter this production drop, makeup wells are drilled at a rate of about two every three years (the actual rate depends on actual conditions). Over the plant's life, it is expected that a total of 35 wells will be drilled. Wells must be within about 1.7km of the powerplant so that not too much heat is lost from the collection system.

The spacing of wells in a producing field is determined by both economic and physical factors. Too few wells would exploit the resource at an economically unattractive rate. Too many wells would cause a drop in production per well due to interference between them, and might deplete the resource too quickly. Usually between 8 hectares per well (Union's practice) and 16 hectares per well (Aminoil's practice) are allowed. Theoretically optimal well spacings notwithstanding, the actual locations of the well pads are determined mostly by where stable sites can be found.

The amount of land that is actually used in field and powerplant development is about 20% of the area spanned (Suter, 1974). For example, Unit 11's first 15 wells used 32 hectares of a total area of about 200 hectares (Teknekron, 1975). However, this 20% is not compact and unobtrusive. Rather, it straggles across the landscape in the form of well pads dotted here and there with tendrils of transmission pipes dissecting the space between well pads and powerplant. Judging from the appearance of the Unit 1 to 11 areas, it seems that little or no consideration was given to aesthetics during their development. In any case, constraints of topography and geology would have limited what might have been accomplished given even the best of intentions. Fortunately, the results are viewed mostly

by geothermal workers and cows.

Clearly, a development which looks like the inner Geysers would be totally unacceptable in southern Lake County. To be sure, a geothermal development cannot be made invisible. Fortunately, the gentler topography of Lake County and improved techniques have allowed a substantial reduction in visual impact. Furthermore, it is quite evident from the appearance of the Unit 13 area that at least Aminoil has made a conscious effort to reduce visual impact despite probable increases in their development costs. The activities of the other companies who are drilling (or will soon drill) in Lake County are not yet far enough along to judge the degree of their commitment on this score, but at least they all claim that they are being as careful as possible. The present regulatory climate makes it seem quite likely that they will be held to their word.

S5.3 Drill Site Selection and Stability

The selection of suitable drilling site is critically important given the rugged topography and treacherous geology of the Geysers area. For these reasons, the number of suitable drill sites is relatively limited. The geological stability of the drill site is particularly important in this regard, because landslide movement in unstable areas can result in well casing failure and consequent blowout. Another important consideration in selecting suitable drill sites is to minimize environmental degradation by erosion.

The cited geological circumstances make it impossible to find completely stable sites for all wells. However, it is at least possible to choose the best available sites and, to some extent, to improve their

stability by chemical treatment of the soil, slope engineering (cutting, filling and inserting drainage) and installing retaining walls.

Nowadays, site selection begins with detailed geological mapping of the general area. Based on this mapping, a site is selected and explored in detail by means of a subsurface investigation. This generally consists of drilling several shallow borings, performing shallow refractive seismic surveys and soil testing. A detailed engineering geology and soil property report which presents an analysis of site conditions is then filed with the State Division of Oil and Gas. If there is any doubt regarding the site's stability, further tests, stabilization measures, or continuing monitoring of any surface movements may be required. Union claims that this procedure virtually insures against problems with slope failure during the life of the well.

Unfortunately, the importance of engineering sites this carefully to guard against possible slope failure was not recognized earlier in the history of the development. Bacon (1976) claims that 91 of 168 wells surveyed are on landslides. (Union engineers point out that this estimate was based on regional mapping, and that detailed mapping and analysis are needed to determine the exact number.) One of these wells (GDC65-28; in the Unit 12 area) blew out in April 1975 because of renewed landsliding. This episode, and what is being done to prevent recurrences, is further discussed in S5.13.

While blowouts are certainly the most spectacular species of well related environmental impact, they are rare, and we believe that the overall environmental degradation associated with them is surpassed by that of erosion and general land spoilation. This too has been greatly

aggravated by the topography and undesirable geological properties of the area, and apparent carelessness during the early period of development. Erosion problems are evident in many places in the older parts of the field, and this damage is largely irreversible. Once again, improved practices and the gentler topography in the areas of most recent drilling have greatly reduced the severity of these impacts in them. Particularly significant in this regard is the increasingly widespread practice of directionally drilling several wells from one pad which is discussed in S5.8 and 9.

S5.4 Drilling Pad and Sump

The immediate area in which drilling operations occur is the drill pad. This is a level space, cleared of vegetation and engineered to keep the natural drainage separate from the drilling effluents. Access to the pad is a single lane road about 4.3m wide. Union states that their access roads are now designed to have the least possible environmental impact. The surface is usually improved with gravels and sometimes even asphalt to provide all weather access.

Where required, the pad is cut and/or filled to increase its size or graded to make it level. Aminoil's practice allows cuts of up to 15 meters deep and fills up to 24 meters deep. The surface is compacted to provide stability. Single well pads are between 0.4 and 1.2 hectares in area. This large area is required to make room for the bulky drilling equipment. The necessary equipment consists of: the rig (derrick), the pipe and piperack, the mud pump and tanks, the air compressor, the diesel engines, the blooie line, and the muffler. Also necessary are a portable office and outhouses. All this is taken away after drilling is completed.

This typically requires one or two months per well.

Also required is the sump. This is typically a large pit with gently sloping sides. It is used to store drilling wastes. Occasionally, an aboveground sump is constructed by fill. An impermeable liner is constructed by lining the walls with clay and compacting it. If soil conditions make this procedure inappropriate, a layer of gunite or a plastic liner may be used instead. The size of the sump varies with the expected depth of drilling, and ranges from a hundred to several thousand square meters in area and from one to ten meters deep. The sump's content consists of materials like drill cuttings, drilling mud, cement particles, lost circulation materials (usually organic; see S5.6), sodium bicarbonate, diesel oil, lubrication oil, and condensate from the muffler. Although none of these materials are particularly toxic, they could cause significant ground and surface water pollution if they were to escape into the environment, and this is why they are carefully contained.

The sump also enables the reuse of previously used water. A geothermal lease includes permission to use the land owner's water for drilling. Because drilling conditions vary so much from well to well, it would be hard to estimate how much water would be used in any future drilling, but the volume generally doesn't seem to be very large. While the drilling mud requires clean water, dirty water (e.g., from the sump) is adequate for spraying into the muffler to remove rock dust.

After drilling is completed, the sump's content is dried out, mixed with native soil, and buried in the sump. Union's present practice is to engineer the sumps to be Class II-1 disposal sites. This practice appears to provide adequate containment for the sump contents for as long as the

pad area itself physically exists.

An important attribute of the drill pad is its drainage. Just as none of the drilling wastes are allowed to leave the pad, none of the natural drainage, except what is used in drilling, is allowed to enter the pad. Ditches are arranged to divert the natural drainage around the pad.

Before the drill rig is used, a hole is dug with a bucket auger. This hole is 91.4cm (36") in diameter and is lined with a preliminary conductor casing of 76.2cm (30") diameter. The conductor hole is usually between 27m and 45m (90' and 150') deep, and is usually dug until hard rock is encountered. This serves to remove the soil from the drilling point and can serve to show intent to drill so that a drilling permit will not expire from inaction.

S5.5 The Drilling Process

The major interfaces between drilling operations and the environment are the circulating media (mud and air) both downhole and at the surface, and the drilling assembly downhole. Mud, air and factors in the downhole environment which determine the choice between them will be discussed in S5.6. Here we will discuss the hardware of drilling and downhole conditions in general.

There are two factors in drilling in the Geysers area that substantially increase expenditures of time and money - the geology and the temperature. These two factors greatly increase wear on drilling equipment and necessitate time consuming procedures. The bit, a bunch of toothed surfaces, cuts the rock and is worn down in the process - the harder the rock, the faster the wear. Changing the bit involves hauling up the entire

drill string, however many hundreds of meters which must be reinserted after changing the bit and other servicing. This is called roundtripping and takes more time than the actual drilling. Drilling time may be on the order of a couple hundred hours, but total time to reaching geothermal resource may be 5 to 7 weeks. The drill pipe is checked for excessive wear each roundtrip.

Another problem stemming from the geology is the difficulty in drilling a straight hole. The bit tends to want to take the easiest route and will "walk" along the strike of a formation or even updip. With constantly changing structures downhole, many adjustments of the drill string must be made. Sometimes this problem is dealt with by directional drilling which will be discussed in S5.8. It is the hard rock geology and hilly, unstable topography that make geothermal drilling in the Geysers twice as expensive as in the Imperial Valley (Teknekron, 1975).

Elevated temperatures (180°C-237°C) downhole cause problems. They generally speed up chemical reactions which interfere with cement setting, affect survey films, electrical sensors, and cause drilling mud to dry up.

While rotating, the drill bit heats up and this increases wear. Because of the high hole temperature, it is difficult to get rid of this excess heat. There have been some suggestions of using a rock melting bit which would take advantage of the hole temperature, but at present this device wears out more quickly than a conventional bit. (For a discussion of exotic drilling techniques see Maurer, 1968.)

There are basically two ways to power the bit: by rotating the entire drill string or by transmitting power through the circulating medium. Conventional drill rig power is faster and must be used when air drilling.

However, wear is greater since the whole drill string rotates and can whip against the hole wall. A downhole motor, driven by pumping drilling mud, saves on drill string wear since only parts at the bottom move, but is much slower. It also increases wear on the bit. The power source for either type of motor is an internal combustion engine with the usual burnt hydrocarbon and noise emissions.

Figure 5.1 shows where various sized holes are drilled and casings are installed. Depths are left general, due to the varying geology in the Geysers. The range of hole depth is about 180m to 3100m, and the average depth is about 2300 meters.

The equipment and casings used in geothermal drilling are generally above API standards. Taking those standards as 1, the safety factor in geothermal drilling ranges from 1.15 to 1.75 at Aminoil and is around 1.5 at Union Oil.

As drilling progresses, a well log is updated to record downhole temperature every 10 meters, formation pressure and seepage, returning volume, and the nature of the cuttings. These variables tell the drilling engineer what conditions exist downhole and enable him to know when to change to different techniques and help him to anticipate problems.

S5.6 The Circulation System and the Two Types of Drilling

Circulation fluids have many purposes: to cool and provide lubrication to the bit and drillstring; to hold back any formation liquids that would normally flow into the wellbore; and to remove the cuttings from the bottom and carry them to the surface. At the Geysers, both mud and air are used. These are used at different depths to fulfill other

purposes that change with downhole conditions and drilling needs. Table 5.1 summarizes these differences. Mud is usually used to drill holes larger than 31.75cm (12.5") in diameter to handle the greater volume of cuttings and to more efficiently cool a larger bit. Air is faster but can only be used in the smaller part of the hole (31.75cm (19.5") and 22.225cm (8.75")) where there is also very little seepage - less than a few tonnes of water per hour. Even at the upper end of this range, foaming agents must be used.

There are two ways to circulate the fluids - direct and reverse. In the first the fluid is pumped down the pipe and up the annulus between the pipe and the wall. Reverse goes the other way, down the annulus and up the pipe. The only advantage of reverse circulation is that it requires less pressure from fluid compressors. Direct circulation is the only method used in both air and mud drilling in Geyser Geothermal wells due to the high temperatures and formations encountered.

Drilling mud is 90% water, more or less (Suter, 1974). The water for it needs to be relatively clean, salt and cement free. Water from cooling towers; i.e., condensate, has been said to be adequate (Suter, 1974) and using such water would lessen the demands of drilling on local water resources. Other reasons for using mud involve the control of subsurface water flow. Mud covers the hole walls with "cake" which provides some waterproofing. The weight of the mud counters the formation pressure and controls the entrance of ground water.

In spite of the great temperature variations within the well, mud must be fairly the same throughout the well, which means that it must be chemically and physically stable. Besides water, mud may consist of the

following (from Suter, 1974):

- Bentonite clay - a volcanic mineral, this provides gelling
- sodium bicarbonate
- guebracho - a tannin
- graphite
- lignite - an organic thinner
- mica
- organic matter - such as cotton seed hulls, ground nut shell - for control of lost circulation if required
- caustic soda - for pH control, approximately .25kg/day/tonne of mud

The mud can be recirculated after the cuttings are allowed to settle out. When the mud can no longer be used due to lack of gel strength or cement contamination, it is deposited in the sump.

One of the major problems in mud drilling is lost circulation. This occurs in drilling through zones of large fractures (Cromling, 1973). The solution to lost circulation over $3m^3$/hr is to seal the fractures by adding some solid particles to the mud which get stuck in the fractures. Mica can be used for this, but organic matter is preferred because eventually it will carbonize and no longer plug the fracture nor impair eventual productive capacity.

High downhole temperatures can also cause loss of circulation and this is dealt with by varying the mud composition. When there is great loss of circulation into the formation, a flush is used to clean the well walls to improve cementation (Fabbri and Giovanni, 1970). While other geothermal areas (e.g., Lardarello) use additives to aid in drilling mud removal, the practice at the Geysers is to use plain water (Capuano).

Also, the flushes are in contact with the well walls for a matter of hours only. Since a reinjection well, which is returning fluid to the formation under pressure, has no apparent effect on the nearby hydrology until several weeks have passed (McLaughlin), it is unlikely that this flushing can possibly have any environmental impact.

When air is used as the circulating medium, the cuttings are removed from under the bit more quickly than when mud is used. The result is that bit cuts farther before it is worn out and quicker, because it is always cutting a fresh surface. In mud drilling, the mud holds the cuttings to the bottom and they are reground, thereby wearing the bit without deepening the hole as much. The cuttings that come out of an air drilled well are usually larger. Bit life in air drilling is 2.3 to 4.6 times as long as in mud drilling (Suter, 1974) and the drilling rate is four times as fast (Capuano).

Due to these advantages, Aminoil prefers to start air drilling as shallow as possible. The controlling factor is the amount of formation seepage. Air drilling is not possible when seepage exceeds several tonnes per hour, because the moisture causes the cuttings to cake and interfere with drilling. The change over from mud drilling to air drilling is easily accomplished, because the equipment is nearly the same. Another advantage that occurs in steam wells is that air drilling is unlikely to damage the production capacity (Cromling, 1973) and does not increase the time to sufficient steam capacity because the well does not need to dry out from contact with the drilling mud. This consideration is particularly important in a business in which time is money. This is the case with geothermal drilling where a rig costs $125-200/h. The rig remains set up until

sufficient steam is obtained and drilling wet can extend this time by 8 to 10 hours (Cook).

There are a couple of special hazards associated with air drilling. One is the fact that it is not possible to recover the drill string if it breaks and falls to the bottom. In mud drilling, the mud provides a cushion to the fall. In air drilling, the string jams against the bottom. It then becomes necessary to plug back the well and redrill. The other hazard is also due to the lack of mass in the well. In mud drilling, the mud column weight provides a counter to any formation pressure so that it stays in formation. The air column has insufficient weight to prevent steam from flowing. From the moment steam is encountered to the time the well is closed in, drilling proceeds at what has been nicely called a controlled producing well or more bluntly, a controlled blowout. Drilling proceeds until sufficient steam has been obtained. This stage can last from one hour to one week (Capuano). Precautions for this phase are discussed in S5.13.

Union's practice differs from that of Aminoil in that they prefer to drill with mud as long as possible. In practice, this means at least until after reservoir rock is encountered and the last casing string is set. The reasons cited for preferring not to air drill any more than is necessary include the problems of water infiltration and sloughing of the well walls, and increased drill string wear associated with air drilling (R.E. Choppell, private communication).

The rock need not be totally dry to permit air drilling. It may be worthwhile for the driller to take mitigating measures against small amounts of moisture. Below 0.5t/hr of water seepage, stearates are blown down the

Table 5.1

Comparison of the Two Drilling Methods

Drilling Conditions:	Mud	Air
Hole diameter	>44.45cm (17.5")	<31.75cm (12.5")
Ground water seepage	>few tonnes/hr.	<few tonnes/hr; preferably none
Actual application	Till through shallow aquifers	Rest of well
Drilling Characteristics:		
Drilling rate	1	4 (rel. to mud)
Bit Life	1	2.3-4.6 (do.)
Pipe Cooling	Good if circulation not lost	Fair
Wear	Drill bit	Drill pipe (from chips)
Time to drill whole well*	3 to 8 weeks	1 to 4 weeks
In drilling typical well	1 week	2 to 3 weeks
Recovery of lost string	Possible	Impossible
Effect on productive capacity	Delays and/or damages+	None
Formation pressure countered by	Mud weight	Blowout prevention equip.
Directional Control	Fair	Poor due to light string**
Directional Devices	Bent or kick sub	Whipstock
Environmental Impacts:		
Noise	Moderate	Extreme if unabated
Dust blown out of well	None	Great if unabated
Water use	Some	Only for dust and noise control
Land surface modification	Pad, sump, access road	Same
Water pollution	Possible	Unlikely
Air pollution	Diesel emissions	Diesel emissions; some steam and rock dust

*Theoretical, as both are usually employed with every well.

+Unlikely, as air drilling is used in steam zone.

**Union states that stabilizer wear is the main reason for poor control.

well to prevent the cuttings from caking. Stearates are added in amounts of 1% to 4% of the weight of the cuttings (Contini and Cigni, 1961). Air drilling produces up to 900 kg/hr of rock bits and rock dust at a drilling rate of 7.6m/hr. Much of this is eliminated from the air in the muffler. The final emission rate permitted in Lake County is 18.1kg/hr. While 900kg/hr is an upper limit and much of this is in larger bits that cannot be airborne, this still seems to assume great efficiency in cleaning the discharge of air drilling.

If the emissions reach 450kg/hr this means that up to 18.1kg of stearates are put into the environment every hour. The extent of dispersal and environmental impacts have not yet been investigated.

S5.7 Noise and Noise Control

Air drilling requires air compressors which make a certain amount of noise, and the air, steam, and cuttings make noise when they come out of the well. Some of the rock fragments are moving at the speed of sound (Neilson, et al., 1975, p. 21). Because of noise abatement requirements, the discharge line runs to a muffler. A cyclonic muffler, an upright can with interior baffles, has an attenuation of about 10 dBA (Atlantis, 1975, III-27). (Union claims an attenuation of 30 dBA.) As the muffler uses dripping water, it also removes rock dust from the air.

Other sources of noise are well testing and well bleeder lines. A bleeder line is 6.35mm to 12.7mm pipe which allows a small amount of steam to flow. A muffler is optional (Neilson, et al., 1975), but a very simple one is usually attached. The line is run underground to the bottom of a metal drum set in the ground. This drum is filled with rocks. The bottom

Table 5.2

Noise Sources

Activity	Frequency of Occurence
Well test venting	8 hours/4 days/well
Steam blowoff during drilling	3-7 days/well
Air drilling rig	2-3 weeks/well
Mud drilling rig	1 week/well
Truck and construction equipment	intermittant
Venting of standby wells	continuous
Flow through pipes to power plant	continuous after plant completion

from Atlantis Scientific (1975), p. III-27

Table 5.3

Noise Levels Due to Geothermal Development Activities

Activity	Maximum Expected Noise Level at 15.2 m (50 ft.)	Projected Noise Levels with Attenuation from Wave Divergence at 800 m (2600 ft.)
Drill Pad Construction	90 dBA	56 dBA
Mud Drilling	90 dBA	56 dBA
Compressed Air Drilling		
No Muffler	100 dBA	66 dBA
Cyclonic Muffler	90 dBA	56 dBA
Well Cleanout and Testing		
No Muffler	120 dBA	86 dBA
Cyclonic Muffler	95 dBA	61 dBA
Shut-in Well Venting	75 dBA	41 dBA

from Nielson, et al., (1976), p. V-146

is sealed to prevent condensate from entering the ground. A rock muffler works well for a 12.7mm pipe but is impractical for a production line of 25.4cm or 30.48cm.

Tables 5.2 and 5.3 present some sources, locations, and levels of noise from geothermal drilling. Unmuffled air drilling and well testing are seen to be the worst among them.

S5.8 Directional Drilling

A directionally drilled well is one that is deflected away from a straight vertical line. The vertical plan of such a well would look like a clock's hands at 7 o'clock more or less. Other shapes are possible, but this is the one suitable for conditions in the Geysers.

To change the direction of the bit, the bit must be guided to drill into the wall of the hole instead of the bottom. One way is to install a narrow wedge at the bottom of the well which shunts the bit off to one side. This wedge is called a whipstock. When it has a loop at the top which the drillpipe passes through but the bit cannot, it can be pulled out when the drillstring is pulled. This is a removable whipstock and is what is generally used. Here the bit is smaller than the regular bit, so that after the curve has been started, it is necessary to go back and ream out the curve to the same size as the rest of the hole.

Another way to start the curve is a kick sub. This is part of the drillstring immediately above the downhole motor which can be bent while downhole by means of a controlling wire line running to the surface. This device has the advantages of not requiring a round trip to set it up (as does a whipstock or a permanently bent sub), of being capable of a straight

alignment (unlike a bent sub) which lessens the chance of damaging the wall mudcake, and of not making a hole that needs reaming. The kick sub is used with a downhole motor and therefore can only be used in mud drilling. To air drill a deflected hole, a whipstock is used. A kick sub is capable of a faster angle build up than a whipstock, 21.3°-23.0°per 100m compared to 6.6°-8.2° per 100m. However, too fast a build up will result in a dogleg, which causes great trouble in running the drill pipe and the casings.

To find out where the hole is going, a survey instrument is sent downhole. One problem with the surveys is that they are recorded on film which is affected by the heat. A non-magnetic heat shield is used to protect the film while not disturbing the survey device's magnetic mechanism. Once the survey is recovered, the problem of interpretation is significant. The main way to improve interpretation of the survey is experience.

The next step is to orient the drill bit in the desired direction. This is not necessarily, and not usually, in a straight line with the final goal. The rotary action of the drill bit causes the hole to corkscrew slightly. The cumulative effect of directional drilling is to cause the well to curve along a very large spiral. Another reason the hole doesn't follow a straight line is that the bit moves differently as the geology changes. The bit wants to follow the easiest path, along a fracture or bedding plane, rather than across strata.

When the hole is not vertical, problems arise from there being a component of gravitational force which presses the drill pipe or casing against the hole wall. In moving the drill pipe either rotationally or longitudinally (i.e., drilling or roundtripping) this frictional force greatly increases wear on the pipe and the power needed to rotate it.

In casing, the usual placement of centralizers is inadequate and about three times as many must be used as would be otherwise.

Finally, to reach the same vertical depth, the hole must be longer and this takes more time and resources. What this adds up to is increased cost. Current charges by Eastman Whipstock are $275/day/man, $55/survey (done every 10 meters) and $1100/run for the downhole motor. Because of the complications in drilling and the increased hole length (called the total depth) drilling time may be increased 33% over the time it would take to drill a vertical hole to the same vertical depth (Bingham).

The critical issue in directional drilling application is how far laterally from your starting point you can drill. This is dependent on the size of the angle from vertical you can attain with reasonable effort, given that the vertical depth is not completely indefinite. The maximum displacement is often put at 400 meters as a rough figure. In a hole of about 1500m vertical depth from the kick off point, an angle of 15° would be required to achieve 400m displacement. As a rule, 15° of angle is very easy to do. In fact, up to 20° has been said to be no problem (Ashe, 1974). This greater angle would yield a displacement of about 550m at a vertical depth of 1500m.

The curve of the hole does not occur at or very near the surface. There are a number of factors which influence the depth at which a bent hole is kicked off. These are summarized in Table 5.4. Directional drilling is done in rock competent enough to support a well. This is below the soft surface layer and determines the limit of how shallow direction drilling can be used.

On the other hand, there are a number of factors which make it

desirable to deflect as shallowly as possible. Three of these have to do with the increase of drilling problems with increasing depth. Directional drilling requires numerous round trips and surveys. There is also normal maintainance round tripping, such as changing a bit worn by the hard formation, and fishing for lost drill pipe. All these things are easier and quicker to do nearer the surface. The effect of temperature, which increases with depth, is smaller. Also the tension on the drill stem (from counter action to the rotating bit) is less severe when the drill pipe is shorter. A fourth factor is the attainment of a greater displacement of the well bottom by a shallower bend.

Two other factors influence how deep the deflection point may be. Since kick sub motors are preferable and they require mud, the deflection point must be above the place where mud drilling is impossible, either because of excessive temperatures or large circulation losses due to fractures. The larger near surface hole size (44.5 cm (17.5") or 31.11 cm (12.25")) is drilled with a larger drill collar which is less affected by the geology (i.e., fractures and bedding) of the formation. However, drilling the large holes with the conventional 11.43 cm (4.5") drill pipe tends to create hole stabilization problems and excessive torquing of the drill pipe beyond its torque limitations.

The actual plan of the directional well will depend on where the drill pad is, relative to the planned well bottom and the geology of the rock in between.

The effect all these factors have on our original example of a directional well is that the deflection point would be perhaps 460m below the surface and the vertical depth of the well would be about 2000m. This

is shallower than the average of wells in the Geysers which is 2285 m (Teknekron, 1975). It would seem to be not very difficult to attain a displacement of 550m. In trying to achieve a greater displacement by increasing the drilling angle beyond 20°, problems begin to occur. There is the above mentioned problem with frictional force: at 20°, it is 34% of the weight; at 40°, it is 66%; at 45°, it is 70%. Above 45° there is a strong tendency for the bit to walk up dip (Petroleum Extension Service, 1974a). The higher the angle, the greater the occurrence of caving or slumping of the hole wall and more chance that the bit may be trapped. The total depth drilled to reach the same vertical depth increases. All these factors mean a decrease in control of drilling and increases in time and cost as the angle is increased. After the curve is completed, there is also a problem of the rig driven drill pipe rotating against the casing during air drilling because of the bend. It can actually wear through the casing, allowing drilling and geothermal fluids to enter the ground. In conclusion, the above mentioned problems can be eliminated by employing deeper deflection points; i.e., conduct all directional correction below the vertical, cased surface hole.

S5.9 The Reasons for Directional Drilling

Aside from exercising reasonable care in site selection, the directional drilling of several wells from one pad offers the greatest potential for mitigating the environmental impacts related to drilling and field development.

Republic Geothermal states that up to six wells may be drilled from one pad. Each additional well requires some additional pad area, but this increment is only a fraction of the single well pad area of 0.4 to

1.2 hectares. The required area depends on the spacing between the well heads on the pad, which varies between 6 meters (Aminoil) and 12 meters (Union). Thus, a multiple well pads require less total area than an equivalent number of single well pads. Furthermore, the wells which share a pad also share the same access road and steam gathering line, which reduces even more the total impact by reducing the visual impact and the amount of area disturbed.

Historically, directional drilling at the Geysers was used mostly for reasons of access, since it allows production zones which have no suitable drill sites directly above them to be reached. However, most of the older wells, directional as well as vertical, were drilled one to a pad. Had multiple well pads been more frequently employed, the area of land disrupted by drilling operations and the visual impacts of the access roads, steam lines, etc., would have been much less. Also, the use of fewer drill pads restricted to the best available sites would have considerably reduced the number of questionable sites which seem to have been employed.

The reason for this historical preference for straight wells drilled one to a pad was cost. Directional drilling of a well can increase its cost from the $200,000 range to the $300,000 to $500,000 range. Similarly, a directional well which is deflected further is more expensive than one which is deflected less. By comparison, a pad costs $10,000 to $40,000 to prepare for drilling. Thus, it is highly advantageous economically to minimize the number and amount of deflection of directional wells even if doing so requires many more well pads.

However, the practice of drilling several directional wells from one pad has come into much wider use in recent years as recognition of the need for careful site selection grew. Union states that nowadays "wells are usually drilled from multiple well pads" (R.E. Chappell, private communication). In Lake County, finding stable drill sites is somewhat less of a problem, but the need to minimize land spoilation and preserve visual qualities is much greater.

McCullogh Oil has stated that they intend to drill a unit sized block of wells on their Francisco leasehold in Cobb Valley from no more than two pads (Francisco Leasehold EIR). It is, perhaps, too early to predict that they will succeed in doing so, and their geological situation may not be comparable to that of the other developers. However, they have set a laudable precedent against which all future developments in Lake County will probably be judged. If this practice proves successful, the total permanent environmental and visual impacts of a unit-sized geothermal development may prove to be not much greater than those of the power plant and cooling towers alone.

S5.10 Casing and Completion

The casing of a well is the steel pipe that is cemented inside of the hole. Wells are cased to keep their walls from collapsing in on them, to keep the steam in them, and to keep shallow ground water out. The containment of steam is essential, as uncontrolled steam loss out of the well at shallow depth would cause a cratering blowout. Shallow ground water seeping into the well would interfere with drilling and could result in local thermal quenching of the reservoir.

Four layers of casing are usually employed at the Geysers. In order of decreasing diameter, these are: the conductor pipe, the surface casing, the tieback string, and the production casing. The tieback string is not essential, but is generally used as a safety precaution. The present standard procedure is to cement the full length of each casing into place.

In designing the casing, allowance is made for the worst expected conditions. When production wells are drilled, this approach generally gives a final result which is consistent with design. But with exploratory wells, in whose case the geology is to a great extent unknown, the originally designed casing is often too short and then extra casing must be run.

The flowrate dependent, high temperature of geothermal steam inevitably causes some problems with thermal stress. Fortunately, a good cement job can evenly distribute differential thermal stresses and prevent casing rupture. Through the use of flushes and scrapers to prepare the well wall and cementing techniques which distribute the cement around the whole circumference, a good bond between wall and casing can be achieved. Another precaution which is often used is to prestress the casing while it is being installed (when cold) so as to reduce compressive stresses when it heats up.

The only completion that a steam well requires is a production control valve which is installed at the beginning of drilling below the blowout prevention equipment (BOPE). It is drilled through until steam is encountered. After commercial quantities of steam have been encountered, the drilling assembly and drill pipe are pulled out, the valve is closed, and the rig and BØPE are removed.

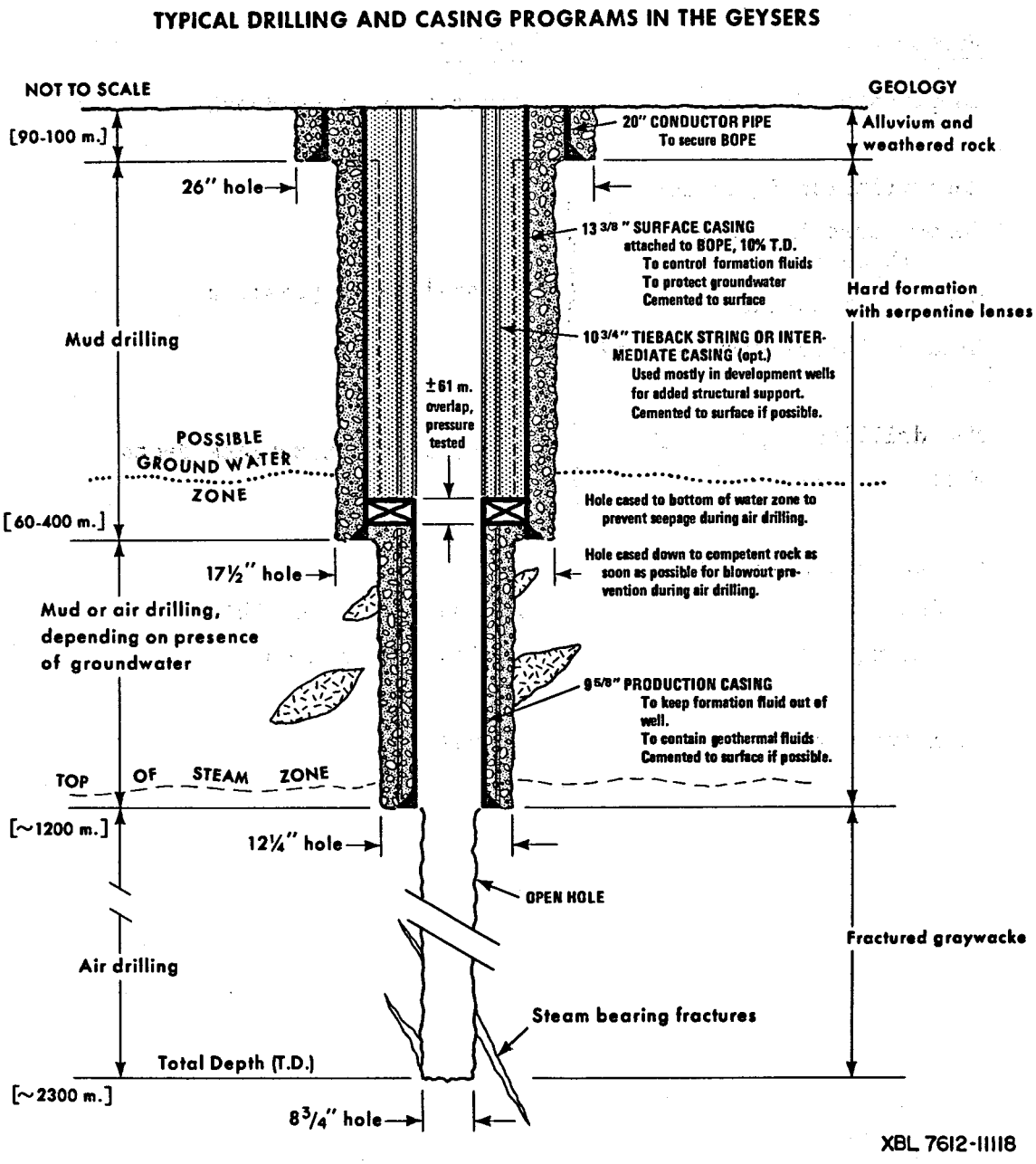

Fig. 5.1 Typical drilling and casing programs in the Geysers.

Table 5.4

Criteria Influencing Depth of Deflection Point

Factor	Effect
Competence of Rock	Limit to minimum depth
Roundtripping & fishing Temperature increase with depth Drill stem torque Greater bottom displacement	as shallow as possible
Mud drilling capability Well hole size	constraints on maximum depth
Casing through curve	
Cost	As shallow as possible
Casing ductility	At least 300m deep
Geometry & geology	Actual plan

Before a newly drilled well is piped into the turbine generating system, it is allowed to vent to clean out any debris, which may last anywhere from 4 hours to 1 day. The production valves are bolted on and, eventually, the steam line is hooked up (immediately if the well is to be connected to an existing power plant). If the power plant does not exist yet, a bleeder line is attached and run to a rock muffler, which reduces the noise of the "bleeding" (see below).

A well is considered to be completed 30 days after drilling operations have ceased and the well is capable of producing a geothermal resource, or 30 days after it has commenced to produce a geothermal resource, unless drilling operations are resumed before the end of the 30-day period.

S5.11 Testing and Steam Production

In order to find out what level of production a well is capable of, it must be tested. There is a preliminary test before the drill rig is removed and the sump filled. In a new field without transmission lines, a complete test is conducted by venting through a cone or barrel muffler or into the air. The noise from these tests is considerable (see Tables 5.2 and 5.3). The reason the more efficient cyclone muffler is not used is that it required a sump to contain the condensate. It would seem to be a fairly simple matter and generally desirable to use a portable sump, since the cyclone muffler is more effective.

When the well is to be hooked up to an existing collection system, it is tested through the line and does not require muffling.

Muffled or not, the steam from the tests enters the air. The cleanout phase mentioned in the last section puts out an estimated 160 kg

of H_2S per well per day for 3 or 4 days. During stand-by venting the H_2S emission is around 4.5 kg per well per day (Atlantis, 1975). These emissions and those associated with drilling in the steam zone are near negligible compared with the power plant emissions and those associated with power plant outages (see S8.2).

Finally the well is connected to the collection system and the steam begins to flow. The flowing temperature and pressure are invariably lower than the static reservoir values. (The temperature drop is not due to heat loss; rather it is simply a property of isoenthalpic steam flow.) The drop in pressure causes the steam to become superheated (see S3.4). The temperature change is typically about 35-50°C which isn't enough to cause casing failure. Fabri and Giovannoni (1970) cite a case of an uncemented 30 meter long casing deforming from a 100°C change in temperature. The stress caused by a 35°C temperature change has been estimated as about 900 bar (Smith, 1961) while the casings are of API grade J-55 and designed to withstand stresses of 30,900 to 53,450 bar (448,000 to 775,000 psi).

If a well were completely shut in, steam would condense at the well head and run down the casing. The contact of the relatively cool water with the hot casing would cause large thermal stresses which could damage the casing and/or the cement between the layers of casing. In order to prevent this, a well is never completely shut in. Rather, the well is allowed to "bleed" steam at a rate of about 1% of its production capacity. Wells not yet connected to a power plant are "bled" into rock mufflers which serve to minimize the noise.

The steam collection system is designed to maximize the free energy (i.e., the electric power generating potential) reaching the plant. A steam pipe requires a 4.6 m to 6.1 m wide path which is cleared of brush for construction and access. The total length of the lines depends on the configuration of wells and distance to the place.

Sometimes wells must be abandoned. There is a specific procedure for abandonment that the state requires. Generally the tops and bottoms of all casing strings are plugged with cement so that the ends are enclosed. Plugging functionally resembles casing in that it prevents the interzonal migration of fluids along the well.

S5.12 Drilling for Hot Water

It is generally anticipated that most of the geothermal reservoirs which may be found in Lake County outside of the Cobb Valley-Anderson Springs area will be of the hot water producing type. (See Chapter 12). Most of the hot water will probably be found in the Franciscan formation as is the boiling water at the Geysers. The most important change from practices employed in steam drilling will probably be the reduction or even elimination of air drilling. It is clear that air drilling would be unsuitable in a water saturated producing zone, and there may not be sufficient dry rock between shallow ground water and deep hot water to warrant a temporary switch to air. As previously noted, the gentler topography of much of the Lake County geothermal area should greatly reduce certain drilling related problems, but this has nothing to do with the type of resource which may be present.

A hot water well requires more complex well head equipment than does a steam well. A self-flowing hot water well requires high pressure heads, expansion heads complete with packoffs, and additional valves. A non-self-flowing hot water well would also require a down hole pump, something which is not yet really commercially available for geothermal service. A downhole pump would be desirable for use with a binary cycle plant in either case for thermodynamic reasons.

Cleaning out and testing a hot water well requires that something be done with the water produced. Clearly, the best means of disposal would be to reinject the water into a second well. This, of course, means waiting until a second well is completed before testing the first. Also, the first few hours flow would probably have to be put into the sump in order to keep rock fragements etc., out of the reinjection well. An environmentally less desirable procedure would be to flow the well into the sump or specially constructed pond. The water would then be disposed of by reinjection into the same well on completion of the tests.

S5.13 Blowouts - Causes, Prevention and Cure

A blowout is the uncontrolled release of geothermal fluids through or in association with a well hole. In the beginning of geothermal drilling, most blowouts were a result of equipment strength being insufficient to withstand the steam pressure or carelessness. As safety standards and equipment were improved, these dangers receded. Only two of the approximately 160 wells at the Geysers have blown out during drilling.

Blowout prevention equipment (BOPE) has been developed to reduce the hazard to life and property that blowouts present. The BOPE is

installed at the beginning of drilling, attached to the production valve on the well head of the conductor pipe and the surface casing. It is tested periodically throughout drilling and worn parts are immediately replaced from a stock of spare parts kept on site. The BOPE can be instantaneously closed by a hydraulic valve. Not only does it close the top of the hole, but also it controls the release of fluids, permits pumping into the hole, and movement of the drill pipe. (Petroleum Extension, 1974b). A remote control valve is installed at some distance from the hole to allow closure from a distance.

Other important factors in preventing drilling blowouts are knowledge of the rock formation and crew training. Besides equipment strength, other causes of drilling blowouts relate to the formation structure. If downhole conditions are known, then appropriate drilling techniques can be used and problems avoided. Circulation loss can be prepared for by changing the mud or adding lost circulation material to the mud. In a fracture zone where there may be alternative paths for the steam, casing can close off those paths and contain the steam in the well. Not surprisingly, the danger of a blowout is greater in exploratory drilling, where conditions are unknown, than in production drilling. There are signs of potential blowout conditions which the crew is trained to recognize. They are also trained to apply counter measures to those conditons.

Campbell (1974) has outlined several specific cases of blowouts. The first is drilling through hydrothermally altered or "punky" earth. The fact that Thermal No. 4 was drilled in an area of punky earth near a fumarole has proved a major contributing factor to its not having been successfully controlled in the 19 years since it blew out (see next section).

Another geologic hazard that can cause a blowout is drilling through a dormant landslide which reactivates at some later date. This is what caused the blowout of GDC65-28 on 31 March 1975, which took four months to bring under control (Bacon, 1976b). Because of the large number of landslides in the Geysers area and the large number of wells drilled through them (possibly more than half; see S5.2), the risk of more blowouts of this sort remains. Blowouts like this are rather unlikely among the newer, more carefully sited wells, but it is clear that, in this case, present care cannot completely compensate for past misjudgement.

In an attempt to forestall any more blowouts of these older wells, Union-Magma-Thermal has initiated a program of detailed investigations of landslide hazards at their sites. This program includes monitoring the sites for any surface movements and any distortion of the well casing which would signal the reactivation of a landslide. The intent is to detect an incipient blowout in time to take appropriate preventive action. This program is being coordinated with the California State Division of Oil and Gas. So far several casings have been found to be out of round. A number of wells have been reworked to modern casing standards in order to make them safer (Bacon, 1976a).

A danger against which the monitoring program does not offer very much assurance is that a major earthquake could conceivably occur in the area and cause one or more blowouts among the poorly sited older wells. To be sure, the largest earthquake that has been recorded in the area was of magnitude 5.9. However, several active faults are believed to exist in the immediate Geysers area (McLaughlin and Stanley, 1975). The fact that there hasn't been a large earthquake on one of them or elsewhere

nearby in the last hundred years does not mean that one is not possible; it merely means that it doesn't seem very probable.

A third possible blowout cause is hitting steam at such a shallow depth that the casing already in place is inadequate to contain it. This was the chief cause for the blowout of Thermal 4. This is why it is important to install a surface casing between the BOPE and fairly competent rock as soon as possible.

A fourth possible cause of blowouts is inadequate equipment strength alone. The one case of this that has been reported involved well head bracing which wasn't strong enough to contain the pressures encountered, thereby causing a break below the control valve to occur.

If a blowout occurs within 100 meters of the surface (which is usually or always the case) cratering and/or large volume steam seepage can occur because at these depths the (static) pressure of the steam exceeds the weight of the overlying rock. Clearly, blowouts must be controlled.

A strictly temporary measure is to quench to well with a large volume of cold water if this is possible. Water quenching is highly useful in temporarily stopping the steam flow just before implacing a cement plug which might be impossible otherwise. This is how GDC65-28 was ultimately brought under control. (It was then abandoned.)

Sometimes it is possible to repair the damage and salvage the well. If the break is at the surface or shallow enough to get at by excavating a pit, it may be possible to remove all of the damaged casing and attach new casing to the end of the undamaged casing below the break.

A third approach is to try to slant drill another well to a point near to the break in order to divert the steam flow or to quench the steam by injecting cold water underground. This was done (for the latter purpose) in the case of Thermal 4 (see S5.14).

A precautionary measure which can facilitate controlling a blowout, should one occur, is to pump grouting into the ground around the well before commencing drilling. If the steam finds an alternate path to the surface, it will be forced to exit outside the grouted area. This enables the crew to work from the original site to control the blowout.

Thus far we have discussed only blowouts of steam wells. It is also possible that a hot water well could blowout. Fortunately, this is even less likely to occur than in the case of a steam well. One reason is that air drilling is much less likely to be used when drilling for water, and drilling mud is too heavy to be blown out of the hole by any but the most enormous pressure surge. Second, the fact that hot water is itself much heavier than steam means that when something unexpected happens with a hot water well, it tends to happen more slowly and more controllably. Finally, hot water wells which have been shut in frequently need some sort of priming to make them flow again, let alone being prone to spontaneous blowouts.

However, a blown out hot water well could well prove harder to control than a blown out steam well. The reason for this is the hot water itself, which may come out of the well at a rate of two or more hundred tonnes per hour. This flow (or, perhaps, shower) of boiling water would make it difficult and dangerous to work near the blown out well. In particular, excavating down to an underground casing break would probably be nearly impossible. This means that a hot water well blowout could last longer and cause more environmental damage (see S5.15).

S5.14 A Famous Blowout - Thermal No. 4

Edited testimony of Dan A. McMillan Jr., President of Thermal Power Company in Rowan and Rowan vs. Commissioner IRS, 26 Tax Ct. Mem. 797 (1969); March 6, 1968. This comprises a discussion of the "blowout" of well Thermal number 4 at Geysers:

"...not knowing enough about the circumstances of the drilling, we put in only 180 feet of surface pipe and cemented it, and it probably was a poor cement job also, and then we continued to drill; and when we got to 500 feet we hit a pressure of maybe 250 pounds or so. And it found an old outlet from a fumerole of thousands of years ago, and it blew out the side of the mountain.

(Describes photograph taken one or two days after blowout). The well was drilled here where the rig is down here, and about 70 or 80 feet away it blew the side of the mountain out and blew rock and dirt two thousand feet in the air...it blew out big boulders and rocks and dirt and steam and dust. Rock powder covered the whole area about a mile and a half square all up and down the canyon.

(Describing second photo) this is the rig back here and the pipe racks, and this dirt all came out of the blow-out — all these rocks, and they are still coming down. He has his head back in there running back over to another area, but the blowout was here; and it just pitched this stuff all over...This lasted about a week altogether or about two weeks...

(Describing third photo taken about a week later.) The rig was on the right 70 feet away, and this was blowing out fine dust and steam and gases...This is dust and dirt and fine crushed rock that was blowing out...

We first tried to put boulders in the blowout here and cemented it. That was attempted about two months after this happened. Of course, we took the rig off as soon as possible, and that was unsuccessful. The cement wouldn't set, and we couldn't stop it that way. It caused more leak around the mouth...The whole area was steaming. The steam went around (the boulders), and we tried to cement it, we couldn't.

We didn't do anything (else to correct the blowout) for quite a while and then in the winter, that winter when it rained — it rains about 80 inches up there — And then the ground got soft, and it caved in at the

top right next adjacent to No. 4 well, and the crater formed was about 100 feet long and 80 feet wide and 60 feet deep. (Before the crater formed) we drilled a directional well No. 11 (defines "directional well") they curve the well with a survey to get to any point they wish in the ground. It is drilled down and set straight, and then you deviate it off at any angle you choose. We hoped to bring the bottom of the well directly under the foot of the No. 4 well. We were going to try to pump water into the well and try to kill the blowout.

We brought in several big mud pumps and had mud pumps down at the creek, and we pumped as much water as we could into the tanks. We had 200,000 gallon tanks approximately, and we pumped both those dry, plus the water brought in, probably 225,000 gallons, into No. 11. (A mud pump) is a pump they use on wells to pump the mud to circulate when they are drilling. (By pumping the water down No. 11) we killed the blowout. It was completely stopped. Then it just blew up again and blew out the whole area.

(Described another photo) that is a picture of the steam and mud and dirt blowing out four and one half hours after the water had been pumped in there. It exploded this way twice. Once like this, and then two or three hours later it did it again, and it continued to blow out through the blow hole. (This second eruption) lasted 10 minutes or so.

(Then) we removed the rig and didn't do anything for several months. Then, after the rains came, we had a cave-in. (The crater was) about 100 feet. It was rectangular in shape about 100 feet long, 80 feet wide, and 65 or 65 feet deep. This was on the side of a hill...the dirt was formerly around this area...sank down into this crater, and then we had to fill it up.

As soon as the weather became so we could work, we cut a hole or window in the side of this thing because it was up above ground, and it was about 20 feet through to the hole; and then we put in a big 30-inch pipe where we thought the old No. 4 was. And then we bulldozed the whole thing full. There was just a big open hole in the hill. We placed a pipe where (we) thought old Thermal No. 4 was...and bulldozed the ground around that.

(Describes fifth picture) it is steam coming out of the caved area, and we are bulldozing. We have two D-8's filling this hole. After we had

it leveled off leaving the 30-inch pipe sticking up about three feet, we brought in logs from the area, three or four-foot logs, and laid them about six to eight feet apart on top of this area we had flattened out and between the logs we put gravel and slotted pipe. We then started in pouring cement very rapidly over the top...(Then we) put the cement back in there and put the rig back on top and tried to — We drilled a small hole, say eight inches or eight and three-fourths inches down inside the blowout trying to get to solid rock and intercept the original hole. We were unsuccessful. Then we put TNT in there and tried to fracture it so we could pump gravel in the plug in the old hole, and that was unsuccessful, also.

The problem (that initially caused the blowout) was that our 180 feet of surface pipe that we cemeted in the hole was a poor cement job, and the ground in that area altered and broke up; and this happened to be a place where the steam — I mean, the high-pressure steam came up through the bore hole and came to a soft place and just dug itself out through an old fumerole probably. We have learned something from every well since these failures we have had, we have put in more surface pipe, and our cement jobs are better; and we have had no problems since with this type of problem."

Thermal 4 never has been successfully controlled. All that was finally accomplished was to bulldoze it over and insert several mufflers into the dirt which have at least succeeded in capturing and venting a large fraction of the steam flow in a more-or-less controlled manner. The rest of the steam flow seeps out of the soil. Needless to say, the bulldozed, steaming area is completely barren and fenced off.

Fortunately, another blowout from the same causes as Thermal 4 is very unlikely to occur. This is because it was caused by what can only be called a stupid blunder (too short casing poorly cemented in incompetent rock) which no one is likely to repeat ever again at the Geysers or in Lake County. However, it should be remembered as an illustration of just how bad a blowout can be.

S5.15 The Environmental Impact of Blowouts

The preceding narrative hardly needs elaboration in regard to how much land may be covered with blowout ejecta. It is likely that a substantial fraction of this material ultimately ended up in Big Sulfur Creek and caused heavy sedimentation damage. The attempts to control the blowout probably aggravated the damage.

A blowout also involves the release of air pollutants just as would unabated steam venting. The Northern Somona County Air Pollution Control District (1976) has estimated that the H_2S emissions from Thermal 4 alone amount to about 4% of the total emissions of the whole development.

Finally, a blowout is extremely noisy. If it occurs at the surface or near enough to it for the break to be exposed at the bottom of the crater, it can be expected to be as loud as an unmuffled well test — on the order of 86 db at 800 meters (Table 5.3). Noise hasn't really been much of a problem with blowouts up to this time, but this is mostly because they have all happened in the remote Geysers area. Noise would, however, most certainly be a major problem if a blowout were to occur in some populated area in Lake County and continue for several months.

A blown out hot water well could cause even more damage. The reason is that most high temperature geothermal brines are rather toxic (see Table 12.2). Two hundred tonnes per hour of the worst brines in Table 12.2 could easily destroy most life in a stream, and they would thoroughly poison any soil that they came into contact with. Also, as noted in S5.13, despite being even less probably, hot water blowouts could prove harder to control.

CHAPTER SIX - ENTROPY AND THE SECOND LAW

S6.1 Entropy and the Second Law of Thermodynamics

The entropy is a thermodynamic function with the dimensions of energy divided by temperature. The entropy of a given system in a given physical state is a measure of the number of ways in which the molecules, or what-have-you, inside that system may be arranged and still correspond to that physical state. (For example, the number of possible arrangements of molecules in one kilogram of liquid water at $0^{o}C$ is 1.5×10^{184}, while in the case of a kilogram of ice at $0^{o}C$, it is 2×10^{120}. More precisely, the absolute entropy is proportional to the logarithm of this number.) Adding heat increases the entropy of a substance and allowing it to expand usually also increases its entropy.

The Second Law of Thermodynamics states:

"The entropy of an isolated system does not decrease."

That is to say, the entropy of an isolated system may either remain constant or it may increase. In practice, it remains constant only if nothing at all happens within the system; if some internal change or process does occur, the entropy must increase. In general, the increase is greater if whatever is happening, happens more rapidly. The process of steam flow down a pipe illustrates this nicely. The only circumstance under which the flow will occur is if the pressure at one end of the pipe is lower than at the other; i.e., there must be a pressure drop. The result of the flowing pressure drop and the attendant increase in volume is that the steam coming out of the pipe has a greater entropy than it had going in. If a greater pressure drop is allowed, the flow rate increases, and so does the entropy of the steam coming out at the other end.

S6.2 The thermodynamic efficiency of heat engines

The thermodynamic efficiency of a power plant like those at the Geysers is defined as the fraction of the heat content (enthalpy) of the incoming steam

which the power plant converts to electrical energy. (Strictly speaking, the enthalpy of the incoming steam must be defined as the enthalpy relative to that of the warm water exiting the condenser cavity.) No power plant can possibly convert all of the heat content of the incoming steam to electrical energy, and the reason for this is rooted in the Second Law; i.e., it is absolute and inviolate natural law that this be so. Waste heat is that fraction of the steam enthalpy which is not converted to electrical energy and must somehow be disposed of.

An alternative (but completely equivalent) statement of the Second Law is:

"The best conceivable power plant is one which doesn't produce any entropy."

In practice, this means that the less the entropy of the steam increases when it flows through the turbine (and any associated steam pipes, including the well bores), the better the thermodynamic efficiency. A no entropy production (isentropic) power plant is, of course, impossible to build, but the concept serves as an ideal toward which engineers strive.

The most immediately relevant statement of the Second Law is:

"A heat engine which takes heat at temperature t_h(^oC) and rejects waste heat at temperature t_c(^oC) cannot have a thermodynamic efficiency greater than

$$\varepsilon_{Carnot} = \frac{t_h - t_c}{t_h + 273.16^oC} \text{ "}$$

(The strange number 273.16^oC in the denominator arises from the fact that the absolute zero of temperature is -273.16^oC. "Carnot" refers to the discoverer of the Second Law.)

In the case of the Geysers power plants suitable choices for t_h and t_c are 238^oC and 51.4^oC, respectively. This gives $\varepsilon_{Carnot} = 36.5\%$. This is the thermodynamic ultra non plus against which the performance of the Geysers power plants must be judged.

CHAPTER SEVEN - POWER PLANTS: BASICS

S7.1 Turbines and energy conversion

The heart of a steam power plant is the turbine, a device which converts a portion of the enthalpy of the incoming steam to mechanical energy. The turbines at the Geysers are of the axial flow type. They have several disk-like circular groupings of turbine blades fastened to a central turbine shaft and turning with it. These are the rotors. Alternating with the rotors are an equal number of similar disks of turbine blades called stators which are fixed to the turbine housing and do not rotate. Immediately upstream of the first rotor blades are a set of steam expansion nozzles. The steam flows through these, expands and, because of the expansion, accelerates. This expansion and acceleration results in the conversion of some of the steam's heat content into kinetic energy. When the steam jets hit the rotor blades, they are deflected in one direction, and push the rotor blades in the other. This slows down the steam, and converts part of its kinetic energy into mechanical work which the turbine shaft transmits to the generator. Having passed through the rotor blades, the deflected steam hits the stator blades. The stator blades deflect it back to its original direction of motion and into the next set of rotor blades, and so on. Each succeeding set of blades has a diameter larger than the preceding one, which allows the steam to keep on expanding and converting more and more of its heat energy into kinetic energy which is constantly delivered to the rotor blades and thence to the turbine shaft and generator.

The greater the expansion of the steam inside the turbine, the greater the fraction of its heat content (enthalpy) that is converted to mechanical energy. The degree of expansion which occurs is determined by the pressures at either end of the turbine. It is desirable that the pressure of the steam going into the turbine be as high as possible, and that the pressure of the

steam coming out of the turbine be as low as possible. We will discuss the particular choice of inlet pressure later on. For now we merely note that it is determined by the producing characteristics of the reservoir and by the economic interests of the steam producers. Therefore, it isn't really a variable of plant design.

S7.2 Condensers and the need for cooling

The pressure at which the steam exits the condenser (the turbine back-pressure) is determined by plant design. Clearly, the backpressure on the steam is just the pressure existing in the place into which the steam exhausts. The simplest thing to do is to let the steam exhaust into the atmosphere as is usually done with small steam engines; for example, "Geysers Unit 0" at the Geysers resort back in the 1920's. However, 1 atmosphere (about 1 bar) backpressure is much too high to even consider in a large power plant. What is done instead is to allow the steam to exhaust into a large, chilled, air-tight box called the condenser where the steam is condensed to liquid water, thereby keeping the pressure below atmospheric. (Look at table A2 again.) In this way backpressures as low as 0.1 bar can be achieved. The condensing steam releases its latent heat when it condenses and this heat must somehow be removed from the condenser if condensation is to continue at a constant pressure.

In a contact condenser (such as those used at all of the existing Geysers Units) this heat removal is accomplished by pouring huge volumes of cool water through the condenser. The steam exiting the turbine condenses on contact with the cooling water, and the mixture of condensate and warmed up cooling water flows out of the bottom of the condenser. In a surface condenser (such as Units 13, 14 and 15 will have) the cooling water flows through a large number of metal pipes rather than simply being poured into the condenser cavity. The steam condenses on the cool walls of these pipes and the resulting condensate dribbles down to the hotwell at the

bottom of the condenser from whence it is removed. As we shall see, this arrangement has definite environmental advantages.

The volume of water which flows through the condenser of a large power plant is enormous, and at the Geysers it is about twice as high per unit ouput as at a modern fossil fuel plant because of the relatively low steam quality and correspondingly low thermodynamic efficiency. For example, Unit 6, which presently has a net output of 50MW, has a water flow of about a hectare-meter per hour through its condenser. (This works out about 8,800 ha-m per year, which is equal to about one-half of the total annual export of Clear Lake water to Yolo County!) The obvious problem is where to find such a volume of cool water. If the power plant is on a seashore or near a large lake or river one can simply take water from the natural body, send it through the condenser once, and return it to its source a few degrees warmer. Wherever feasible this is done as it is by far the simplest and cheapest arrangement. Unfortunately, this is totally out of the question at the Geysers and even Clear Lake isn't really big enough for this purpose (because of the thermal pollution problem). The only other alternative is to take the water exiting the condenser and cool it back down for reuse. This is what the <u>cooling towers</u> do. Those used at the Geysers are of the <u>wet mechanically forced</u> variety. Basically, each cooling tower cell is a big box full of redwood planks with air baffles on the sides and a large electrically driven exhaust fan on top. (Redwood is used because it can stand the condensate for years before rotting away.) The fan sucks air up through the packing, and the warm water dribbles down through it. Some of the water evaporates on contact with air, and this cools down the remainder. The cool water collects in the water basin at the bottom of the tower, and from there it is pumped back to the condenser.

S7.3 The gas ejectors

As is by now known to all, the Geysers steam is not pure water vapor. Rather, it contains a few tenths of a percent of other gases. Some of these gases (CO_2, N_2, H_2 and CH_4) are not very soluble in water and when the steam condenses, they mostly remain in the gas phase rather than dissolving in the water. (Essentially all of the NH_3 and, unfortunately, most of the H_2S do dissolve in the water.) If these gases were allowed to accumulate in the condenser cavity, they would rapidly raise the backpressure to atmospheric, thereby blowing all of the hot water out of the hotwell and causing all manner of mayhem. This is why they must continually be removed. The gas ejectors do this. The gas ejectors are simply low grade vacuum pumps which suck the gases out of the condenser cavity and compress them to just above atmospheric pressure so that they can be discharged through a stack. This compression is accomplished in two stages. The gas ejectors used at the Geysers are of the steam jet type, which are by far the simplest, cheapest, and most reliable. They work on the Venturi principle - a jet of steam flows through a Venturi orifice, and the partial vacuum which it creates on its flanks sucks the gases into the steam jet. This steam jet is condensed in a small condenser very much like the main one, and the gas is deposited in this smaller condenser cavity at a higher pressure. The second stage gas ejector removes these gases from the first stage condenser. The pressure of the gases in the second stage condenser is slightly above atmospheric, and they are simply released to the atmosphere through a stack.

S7.4 Unit 6 - a typical Geysers power plant

Figure 7.1 is a "design" schematic for Units 5 and 6 quoted from Finney, et.al. (1972). Figure 7.2 is a somewhat simplified version of the preceding Figure in metric units. Figure 7.2 is actually somewhat more accurate, as most of the mass flows and thermodynamic values are taken from

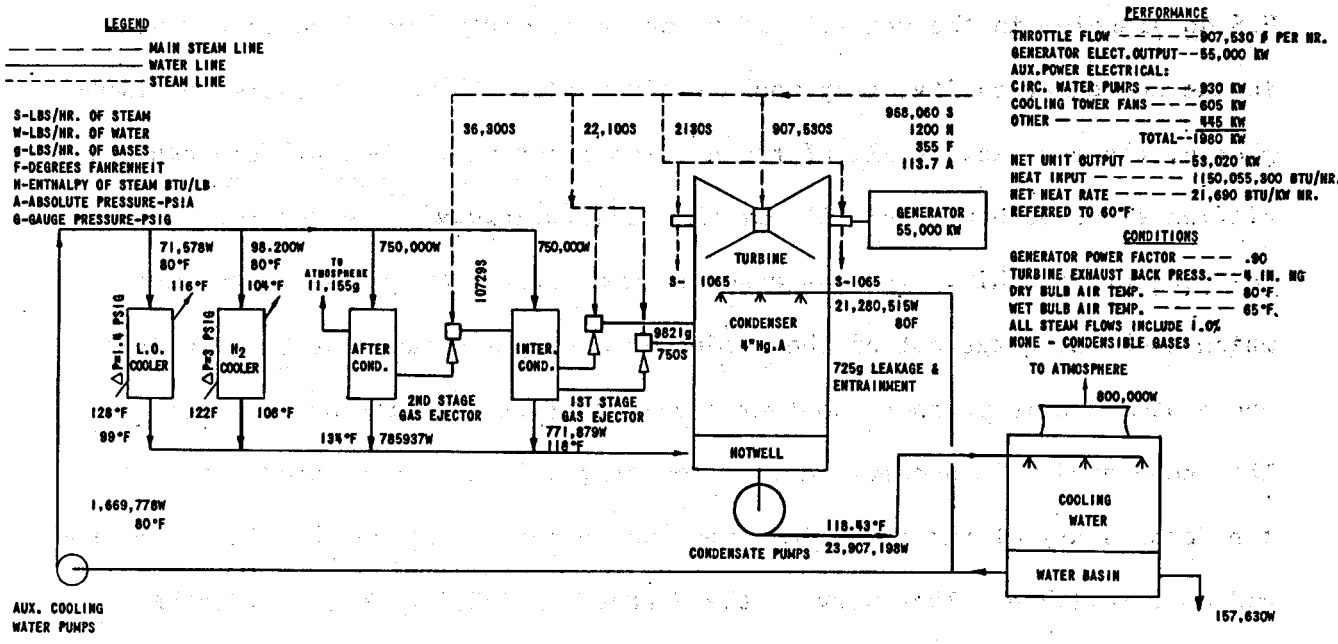

Fig. 7.1 Heat balance diagram, designed load, Units 5 and 6. From Finney, Miller and Mills (1972). By permission of PG&E.

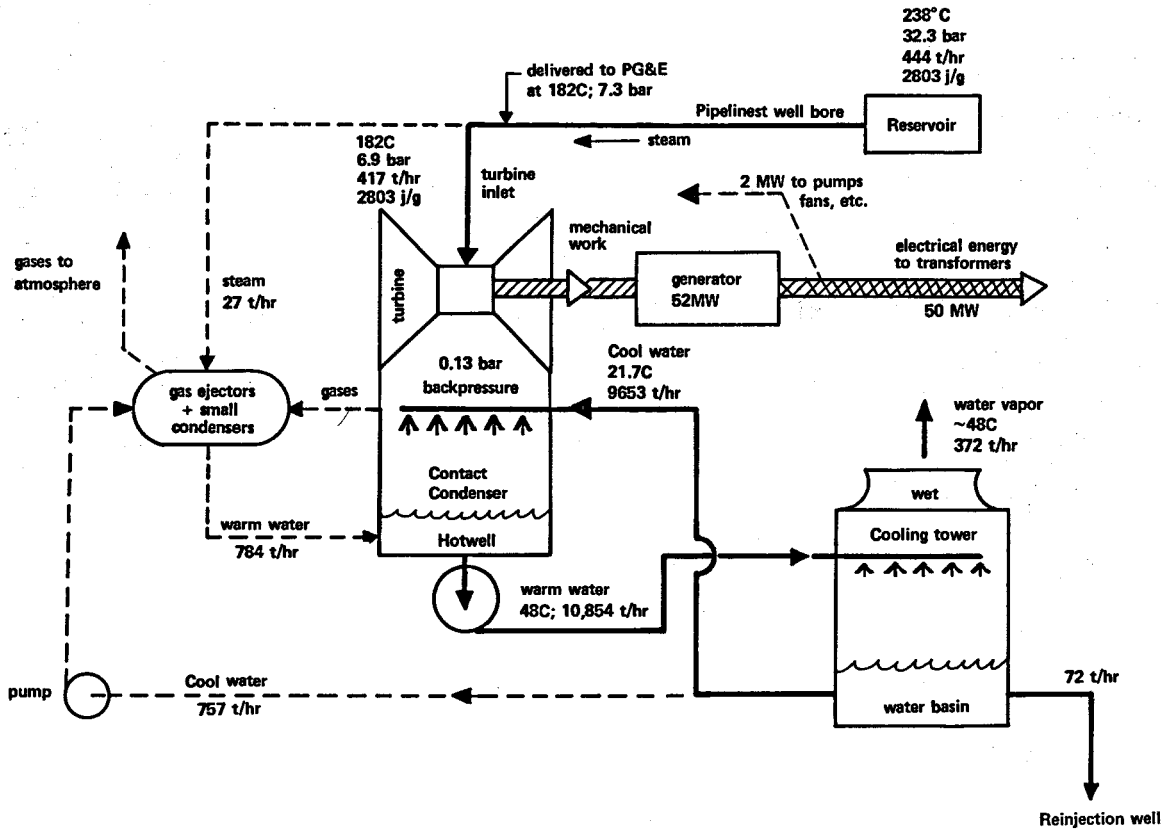

XBL 769 4015

Fig. 7.2 Simplified schematic of Geysers Unit 6.

Heavy lines - major water and steam flows
Dashed lines - minor flows
Mass flows in metric tonnes per hour
Enthalpies relative to 0°C liquid water

Based on actual operating data for 1st shift - 3/7/76 and Finney, Miller and Mills (1972).

actual operating data. (The three water flows out of cooling tower water basin, the hotwell temperature and the auxiliary power load are taken from Figure 7.1.) All of the minor steam and cooling water flows are lumped in with the gas ejector flows because these are by far the most important of them. The indicated split of the water leaving the plant between cooling tower evaporation and reinjection is only approximate. The actual split depends on meteorological conditions; on hot, dry days more water evaporates, while on cool, damp days more is reinjected. The conditions stated for the reservoir are simply those of saturated steam at its maximum enthalpy which is probably a fair approximation of what the reservoir was like when it was first drilled. By now the temperature and pressure are probably somewhat lower due to the depleting effects of several years of production, but we use the presumed initial conditions anyway because they serve as a convenient reference point and because reservoir data is not available.

Note the large pressure and temperature drop between the reservoir (actually, the point in the reservoir at which boiling takes place) and the point of delivery to PG&E. This drop could easily be reduced by going to a smaller flow rate but as noted earlier, this would be uneconomic for the steam producers. The temperature drop is not due to heat losses. (Notice that the turbine inlet enthalpy is actually a little bit higher than the reservoir enthalpy due to a small amount of superheating between boiling front and well-bore.) Rather, it is simply a result of the pressure drop at constant enthalpy which occurs in the well-bore and in the fractures near it.

The net flow of water (including steam) through the plant is in through the turbine and gas ejectors and out through the cooling tower (as water vapor) and down the reinjection well. All of the liquid water in the plant is steam condensate.

The larger steam and water flows are very large indeed. Particularly important is the amount of cooling water which is consumed by evaporation from the cooling tower. This is approximately the rate at which water would have to be supplied from an external source if condensate cooling were to be eliminated. Note that the mass of cooling water which flows through the condenser is about 22 times greater than the mass of steam it condenses.

Figure 7.1 shows a few details which have been dropped from Figure 7.2 in order to simplify it. The "L.O. Cooler" is the lubricating oil cooler. The "H_2 Cooler" is precisely that. Because hydrogen has the smallest molecular weight of any gas, it offers the least resistance to objects moving through it of any gas. The generator housing is filled with it in order to minimize the friction on the rapidly rotating (3600 rpm) parts. The two very small steam flows, shown going to either end of the turbine shaft flow through the bearings in order to keep air from being sucked into the low pressure portions of the turbine housing thereby, making more work for the gas ejectors.

Units 5 through 10 are all very nearly identical. Units 3 and 4 were initially essentially the same except for being only half the size; now, however, their reservoir has been depleted to the point that they are being modified to take lower pressure steam (about 4.5 bar). Units 1 and 2 are still smaller (11 and 13 MW respectively) and have a different condenser design which, however, is also of the direct contact type. Unit 11 is rated at 110 MW net output, but aside from being twice as large, it differs from Unit 6 only in that it has H_2S abatement equipment and two turbines rather than one. The H_2S abatement equipment is really an "add-on" rather than an integral part of the plant cycle. For this reason we will delay discussing

it until the H_2S abatement Chapter. Unit 12 will be identical to Unit 11 or very nearly so.

There is an excellent reason for these plants all being pretty much alike; this particular design is the simplest and cheapest that is consistent with a decent thermodynamic efficiency in the absence of sufficient water for once through cooling. Most (though not all) of the units at Lardarello are very nearly identical to the Geysers Units, the only difference being that they use large mechanical vacuum pumps instead of steam jet ejectors for removing the gases from the condenser cavity. Unfortunately, these plants simply were not designed with H_2S abatement in mind. Units 11 and 12 represent a none-too-successful attempt to put a bandaid on this old design. The corrosion problems encountered with Unit 11 seem to essentially insure that Unit 12 will be the last plant of this design that the Geyers will see.

S7.5 The thermodynamic performance of Unit 6.

Table 7.1 is based on Figure 7.2. It shows how Unit 6's overall thermodynamic efficiency of 15.6% comes about. The 100% efficiency of heat transfer is simply an expression of the First Law - each joule of heat that leaves the rock ends up in the steam. The 36.5% is the maximum efficiency with which 238°C heat can be converted to mechanical or electrical work by a heat engine which dumps its waste heat at 51.4°C as is the case with Unit 6. (51.4°C is the saturation temperature corresponding to the backpressure of 0.13 bar.)

Please understand that this 36.5% depends on plant design <u>only</u> through the value of the backpressure - the rest is steam quality and natural law. The only ways to improve this absolute limit are to raise the heat source temperature (impossible in this case) or to lower the backpressure. The backpressure

is determined by the temperature of the warm water leaving the condenser and is generally a bit higher than the corresponding saturation pressure. The only way to lower it is to reduce this temperature. This, in turn, can only be done by increasing the size of the cooling tower and the volume of the cooling water flow. These are already much larger at the Geyers Units than they would be in the case of conventional power plants of the same output. The economic constraints on this course of action are obvious.

31.9% is the highest conversion efficiency for 238°C steam (over a 51.4°C heatsink) which is consistent with the Second Law i.e., what a (non-existent) isentropic turbine might be able to do. This value is lower than the Second Law Efficiency for 238°C because only a part of the enthalpy of 238°C saturated steam (the latent heat of vaporization at that temperature) is actually heat available at 238°C. The balance is sensible heat which is available only at lower temperatures. Thus, 31.9% is the very best that can be done with the very best steam available from the Geysers reservoir, and it is this number against which the performance of the Geysers Units must be judged.

The pressure drop that the steam suffers flowing up the well causes a very serious drop indeed - 31.9 to 24.0%. This drop is a consequence of the basic thermodynamic principle that if you want something done in a hurry, you have to pay for it with an entropy increase. In this case what is being done in a hurry is to move very large volumes of steam up the wellbore at a high flow rate, and the increase in entropy ultimately expresses itself as a decrease in the thermodynamic efficiency. The 7 bar or so turbine inlet pressure employed at the Geysers was decided on because this is the value at which the amount of power that may be generated from a given well is maximized (Finney, 1973). It would be easy to reduce the pressure drop by simply connecting more wells to each plant and taking less steam from each one but, of course, this would mean less power generated per well. On the other hand, reducing the turbine inlet pressure would increase the steam

flow from each well, but the further deterioration of steam quality would again decrease the power output per well. The reason that maximizing the power output per well is the criterion upon which the turbine inlet pressure (and, thereby, the steam flow rate per well) is based is that it is essentially identical with the criterion of maximizing the steam producers' profits. PG&E pays for the steam it uses on a per kilowatt-hour generated basis regardless of thermodynamic efficiency. Thus, the price paid for the steam is completely independent of inlet pressure and PG&E doesn't have much reason to care what the latter is within broad limits, and anything that the steam producers like is fine for PG&E. However, the costs to the steam producers of producing 1 kWh worth of steam varies inversely with electric power generation per well. Hence, maximizing the power generated per well maximizes their profits. The fact that maximizing current power production and profits from each well isn't consistent with maximizing energy output over the whole life of the well pulls no economic weight.

Note, however, that the calculations in Table 7.1 are strictly applicable only at the start of the reservoir's productive life; i.e., a 238°C reservoir temperature is assumed. As the temperature and static pressure slowly decrease over years of steam production more wells are drilled (the replacement wells) in order to maintain a reasonable steam flow. Thus, the steam production from each well decreases with time, and the flowing pressure drop losses also decrease.(Note, however, that the overall efficiency doesn't change because this improvement just cancels out a reduction in Second Law Efficiency which is due to the decreasing reservoir temperature. Of course, Unit 6's reservoir is probably considerably cooler than 238°C by now. It is just this compensation by the addition of replacement wells that keeps most of the calculation relevant to its case.) Ultimately, a point is reached beyond which any additional wells become uneconomical and the turbine inlet pressure must be reduced. Units

3 and 4 have already reached this point, and have been modified to a turbine inlet pressure of about 4.5 bar. If they had started out at a higher turbine inlet pressure, this point would, of course, have been reached just that much sooner.

Returning to Table 7.1, the next drop in efficiency (from 24.0 to 22.5%) is due to the diversion on 6.1% of the steam flow from the turbine to the auxiliary equipment. Most of this steam goes to the gas ejectors. There is clear room for improvement here, as the steam jet gas ejectors are rather inefficient vacuum pumps. The available alternative is mechanical gas ejectors like the ones employed at Lardarello. These are rather more energy efficient devices. Using the nomograms presented by Dal Secco (1975) and assuming 1 weight % gas content in the steam with an average molecular weight of about 30 (the design criteria for the gas ejectors on Units 1-12), we estimate that two stage mechanical gas ejectors for Unit 6 would require on the order of 1 MW to power them. Substituting mechanical ejectors for steam ejectors would, therefore, involve replacing a 6% steam flow diversion by a 2% electrical or (equivalently) mechanical power diversion - a clear thermodynamic gain which would improve the bottom line to about 16.2%. The reason that steam jet ejectors are used at the Geysers is that they are extremely cheap, simple, and trouble free (no moving parts). In contrast, mechanical ejectors are fairly sophisticated and expensive machines. They are used at Lardarello because the steam there is so gassy (typically about 6.5% by weight) that the low efficiency of steam jet ejectors would be intolerable.

The throttle and strainer losses are inevitable (given what comes up in the steam) and too small to worry about.

The turbine efficiency related loss is the largest of all. However, it is perhaps the least likely of all to be significantly reduced. As it happens, large steam turbines of the sort used in powerplants are one of the most important and most highly perfected technological products of our civilization. They have been around for over a hundred years, and their longstanding technological maturity is illustrated by the story of Unit 1's turbine-generator set (Finney, et al., 1972): this turbine was originally manufactured in 1924 and installed in a fossil fuel plant in Sacramento. By the time that Geysers Unit 1 was built in 1963, the old fossil fuel plant had been dismantled, and its turbine-generator was overhauled and transferred to geothermal use. Despite being more than 40 years older and 4 times smaller than Unit 6's turbine generator, its conversion efficiency (relative to the hypothetical isentropic turbine) when running on 6.9 bar steam is only slightly lower - about 64% as compared to 72.6%. Considering how many billions of dollars worth of utility turbines have been sold since 1924, it seems unlikely that there is much room for further improvement.

72.6% is actually not very impressive as utility turbine efficiencies go, but it is quite good for these turbine inlet conditions. The considerably larger turbines used in modern fossil fuel and nuclear plants have (differential) efficiencies on the order of 80-85%. However, they use much hotter (typically above 300°C) and higher pressure steam. This means that a greater fraction of their power conversion occurs in the smaller and more efficient early stages. Also, they take steam with considerably more superheat than the Geysers steam has. This is important, because superheat reduces the fraction of the steam which condenses to water droplets

while still in the turbine (because of the cooling it undergoes). A rule of thumb for estimating a turbine's differential efficiency is ε = 80-% liquid water at turbine exit. In the case of Unit 6 the exiting steam contains 10% liquid water, and 72.6% is not bad at all.

(Quite aside from its thermodynamic undesirability, this hypersonic drizzle eats away at the turbine blades and we understand that 10% is near to the limit of tolerability. Other and even more serious turbine problems at the Geysers are caused by the dust in the steam, which also erodes the blades, and embrittlement of the turbine blades by the various gases in the steam. The combination of these three problems is so bad that, when a rotor blade breaks, it is not repaired; rather the blade opposite from it is broken off to balance the turbine until enough damage accumulates to force a complete overhaul!)

The final efficiency loss is due to the diversion of about 4% of the Unit's output to power its various electrical auxiliary equipment. The only portion of this which could reasonably be eliminated is the third that powers the cooling tower fans. The way to do this would be to go to natural draft cooling towers (which do not require fans) and are fairly common in large fossil fuel and nuclear plant use. Unfortunately, they are so big that there is literally no place to put them in the up-and-down topography at the Geysers. It would be easy to find room for such a tower at some place like Borax Lake, but we doubt that a 100 meter tall monster peeking over those low ridges would be appreciated by the neighbors!

Although the actual thermodynamic efficiency of the Geysers Units is only about half of what thermodynamic law allows given (and assuming) the initial reservoir conditions, there does not really seem to be much room for improvement. The only quick and easy modification would be to use

Table 7.1

Geysers Unit 6 - Efficiency Losses

51.4°C Liquid water taken as enthalpy zero

	Differential Efficiency (%)	Cumulative Efficiency (%)
Heat extracted from rock[1]	100.0	100.0
Second Law of Thermodynamics (t_h = 238°C, t_c = 51.4°C)	(36.5)	(36.5)
Best possible steam cycle efficiency relative to Second Law Efficiency[2]	(87.4)	(31.9)
Losses due to flowing pressure drop in formation, well and pipes	(75.2)	24.0
Fraction of steam going to turbine[3]	93.9	22.5
Losses due to pressure drop in throttle and steam strainers	99.2	22.3
Turbine efficiency	72.6	16.2
Fraction of gross power delivered to lines[4]	96.2	15.6

[1]Assumes turning 51.4°C water into 238°C saturated steam by adding 238°C heat.

[2]The enthalpy of 238°C saturated steam relative to that of 51.4°C liquid water is 2585 J/g. However, only the 1774 J/g of this which represents the latent heat of vaporization is heat available at 238°C. The indicated Second Law Efficiency applies to only this latent heat. The remaining 811 J/g is sensible heat which is available at temperatures between 51.4 and 238°C. This is what causes the best steam cycle efficiency loss.

[3]Most of the rest goes to the gas ejectors.

[4]Most of the rest goes to run the condensate pumps and cooling tower fans.

mechanical gas ejectors instead of the steam jet variety, but this improvement would be so small that it hardly seems to be worth bothering with. A rather more impressive improvement would result from using more wells and, thereby, increasing turbine inlet pressures, but this would probably require instituting a direct or indirect subsidy in order to make it palatable for the steam producers. Also, it would carry with it greater drilling and steam pipeline related environmental impacts and force PG&E into constant tinkering with the powerplants to compensate for the effects of reservoir depletion. All in all, considering all of these complicating factors, the thermodynamic performance of the existing Geysers plants is as good as can be reasonably expected.

S7.6 Unit 13 - A surface condenser equipped power plant

Figure 7.3 is a schematic of what Unit 13 will be. The chief difference from the earlier plants will be in the condenser.

In a contact condenser the steam is condensed by direct contact with a deluge of cool water. Because of the very large amount of water which pours through the condenser cavity, most (60-80%) of the H_2S initially in the steam leaves the condenser dissolved in the water and goes to the cooling tower where it is stripped from the cooling water by the air flow and thereby ends up in the ambient air. The huge volume of this water flow severely limits the possibilities for removing the H_2S from it. That fraction of the H_2S which leaves the condenser cavity via the gas ejectors is easy to deal with, but it is such a small fraction of the total that PG&E doesn't really consider it worth bothering with.

The surface condensers which are to be installed in Units 13, 14 and 15 are specifically intended to shift most of the H_2S content of the

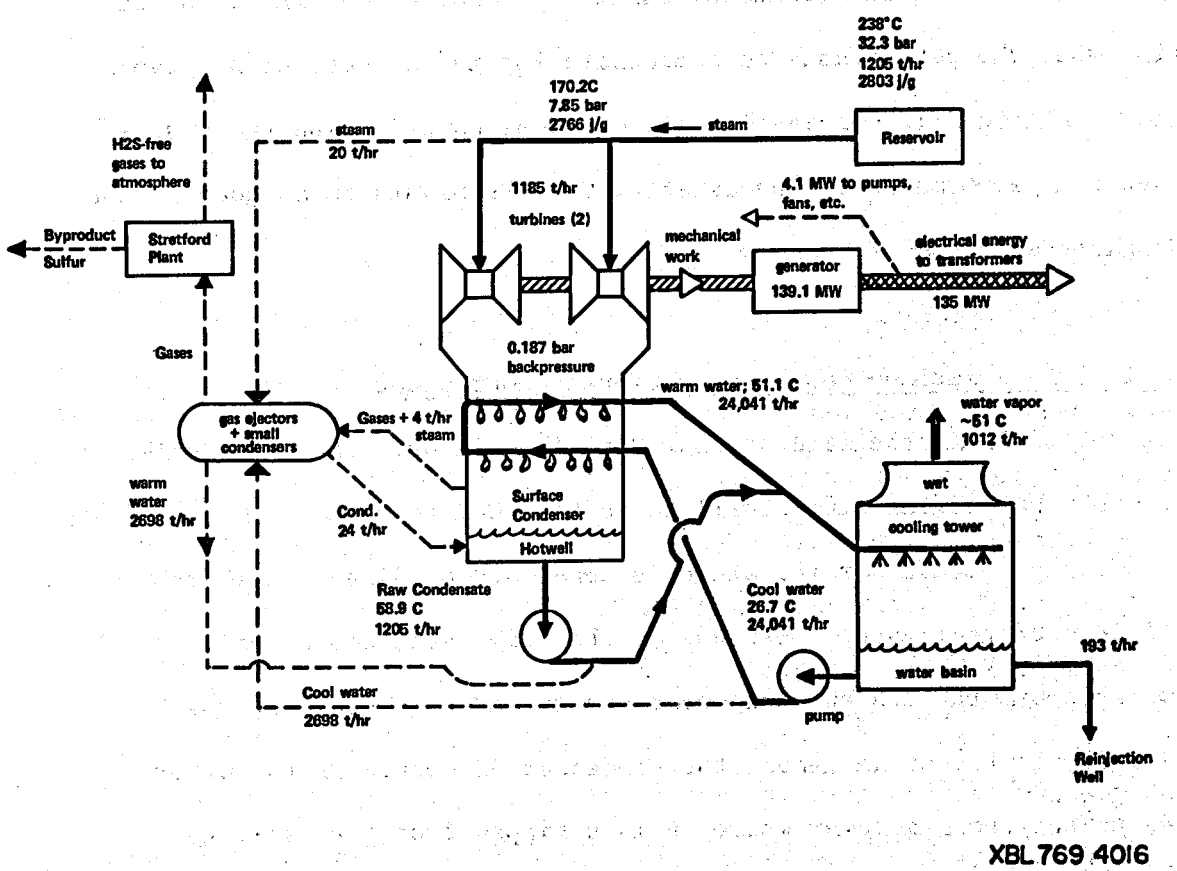

Fig. 7.3 Simplified schematic of Geysers Unit 13.

Based on Figure 15 in PG&E (1975).

steam to the small and, thereby, easy to scrub off-gas stream. The way this is accomplished is to eliminate the direct contact between steam and cooling water. Rather than going through the condenser cavity in the form of a deluge, the cooling water flows through the surface condenser by way of several hundred thin walled metal tubes (a titanium alloy will be used at the Geysers in order to essentially guarantee the absence of corrosion problems). The steam condenses on the cool outsides of the tubes, and H_2S and cooling water never meet. Thus, the only water leaving the cavity of a surface condenser which will have been in contact with the H_2S in the steam will be the condensate. Because the volume of the condensate stream is only about 1/20th of the volume of the cooling water stream, it is hoped that the fraction of the H_2S which leaves the condenser cavity dissolved in water will be much smaller than is the case with the contact condensers. The rest of the H_2S will leave the condenser via the gas ejectors and go to a small chemical plant (the Stretford Plant) which will destroy it. (A detailed discussion of how well this is likely to work will be presented later on.)

The key remaining problem is that the plant still needs cooling water and that condensate is the only source available up at the Geysers. Thus, although the condensate leaving the condenser will contain a considerably smaller fraction of the H_2S when it leaves the condenser cavity, this H_2S will still end up going to the cooling tower and, from there, out into the atmosphere. There will be no significant amount of H_2S emitted via the off-gas stream because the Stretford plant should closely approach 100% abatement efficiency and if it does not (highly unlikely) it will be easy enough to devise something that will. Thus, the only point of H_2S emission from these plants will be the cooling towers, and this only because the condensate must be used for cooling water. If an alternate source of cooling water could be found or the need

for the wet tower could be dispensed with, Unit 13 could be made to run completely clean.

The reader should remember this well, because what it really means is that Unit 13 is one minor plumbing change away from the fabled "closed system" of which some speak so fondly. There is no reason to dream of downhole heat exchangers, binary cycles or anything else of the sort - all of these schemes would require an outside source of water or nonevaporative cooling too. Basically, there is simply no environmental reason to bother with them for, if their cooling needs can be met, so can those of the completely clean version of Unit 13. (Note, however, that the binary system is thermodynamically preferable if the input fluid is liquid water at a temperature below 200°C. The downhole heat exchanger is, however, an intrinsically dumb idea which simply would not work regardless of the fluid.)

The small condensers in the gas ejector system (not shown) will also be of the surface type in these plants. There is one way short of finding an outside source of cooling water in which Unit 13 could be made cleaner. As the design stands, the water which is reinjected is taken from the cooling tower basin, because this is the easiest place to take it from. To be exact, there is a pipe or spillway built into the basin wall and when the water reaches that level, some overflows and goes to the reinjection system. However, the water in the cooling tower basin is the cleanest water in the system. It would be environmentally desirable to reinject the dirtiest water in the system which is the raw condensate. If only raw condensate were reinjected this would reduce the Unit's remaining emissions by 15 or 20%. The PG&E staff informs us that they do not like this idea because it would require an active reinjection control system and this would, of course, increase the number of things that could go wrong. Another reason is that the sludge

which invariably accumulates in the cooling tower basin requires some flushing to control it and, for that reason, at least some reinjection water must be taken from there. In any case, we feel that the system could be modified so that at least most of the reinjection water would be raw condensate.

S7.7 Alternate cooling methods

As noted before, if a surface condenser equipped plant were provided with a means of cooling other than wet towers using condensate for cooling water it would have essentially no H_2S emissions during normal operation. This makes the question of alternate cooling methods environmentally important.

The simplest and best alternative would be to simply reinject all of the condensate and supply water from some other source to the cooling water circuit. A plant like Unit 13 would require an average of about 1000t/hr (the exact value depending on the weather) which is about 880 ha-m/year. This is a rather large amount of water, but could probably be squeezed into Lake County's water budget if a serious commitment to zero-emission geothermal development was made. Of course, Clear Lake (or its outflow Cache Creek) are the only sources from which this much water could reasonably be taken, and the possible locations of such plants would be restricted accordingly. (Note that the Borax Lake basin is near enough to Clear Lake to deliver water too.) Also, it seems unlikely that more than a very few such plants could reasonably be supplied with their cooling water needs from the Lake unless water exports to Yolo County were reduced.

An alternate cooling technology which would not consume any cooling water at all is that of dry cooling towers. These work exactly the same way as an automobile radiator does - warm water flows through thin walled, finned tubes which are cooled by air blown over them by a fan. No water evaporates, and no gases at all are released as the cooling water never comes

into contact with the atmosphere. For this reason contact condensers could (and most probably would) be used with dry towers without increasing the emissions from essentially zero. Unfortunately, dry towers have disadvantages of thermodynamic performance, size and cost which are so bad that there is not a single one in utility use anywhere outside of Europe at this time. The thermodynamic problem is that dry cooling towers cannot possibly cool water to below the ambient air temperature. On hot days this can cause a catastrophic increase in backpressure and, thereby, a drop in thermodynamic efficiency precisely when power demand peaks because of heavy air conditioner use. (Wet towers can cool to well below ambient air temperature as long as the relative humidity is low.) This problem can be somewhat moderated (but not eliminated) only by making the towers very large so that at least they can cool the water to not far above ambient air temperature. Their large size, of course, makes them expensive. The PG&E staff has estimated what equipping Unit 13 with dry towers would have meant (PG&E, 1975, pp. 112-114): the base of the tower would measure 52m x 213m (rather than the 24m x 52m size of the wet tower which will actually be built) and it would cost about 8.5 million dollars more. It is pointed out that the cost increment (and, presumably, the size) could be decreased, but only at the cost of power output curtailments during the summer when they would be least tolerable.

A possible compromise between the benefits of wet and dry towers are the so-called <u>dry-wet combination</u> cooling towers (Patel, Croley and Cheng, 1975). Basically, these consist of a dry tower-like section and a wet tower-like section arranged so that the dry section cools down the water as far as it can, and then the wet section cools it down to the final temperature desired. On cold days the dry section does most of the cooling and little or no cooling water is consumed, while on hot days the wet section takes over

most of the cooling load. The split of the cooling load between the two sections may be continually optimized by use of any desired criterion such as minimizing cost or minimizing water consumption. The advantage over all-wet towers is obvious: sample calculations which the cited authors present for various meteorological conditions seem to indicate that an (annual average) reduction of water consumption by one-half may reasonably be achieved at reasonable cost. The advantage over all dry towers is that the dry section need not be very large because the wet section is there to help on hot days; i.e., the dry section can be designed with the criterion of being able to handle the full cooling load on February 8th rather than on August 8th, thereby achieving a huge reduction in cost and size. Although there are none in use yet, we strongly recommend that combination towers be seriously considered for use with any future powerplants to which an external supply of water might be available (i.e., in areas like Borax Lake and Mt. Konocti). We note, however, that there would be no environmental advantage in using them with condensate cooled plants, as most of the H_2S dissolved in the condensate would still be released from the wet section under most meteorological conditions.

Finally, we consider once-through cooling which is the simplest, cheapest and most widespread of cooling technologies. This would simply consist of taking cool water from Clear Lake or Cache Creek, sending it through the heat exchange tubing, and putting it back whence it came. The problem is the huge volumes that would be required. For example, if the 24.4^{o}C temperature rise indicated in Figure 7.3 were environmentally acceptable in the context of once-through cooling (which it certainly would not be), about 24t/h = 21,000ha-m/yr would be required to cool a plant the size of Unit 13. This is more than the annual export of Clear Lake water to Yolo County of 18,500ha-m (Clear Lake Observer, 1976)! Furthermore, a powerplant would require a steady

yearround flow which agricultural water withdrawl is not. We believe that Cache Creek could, at most, cool one power plant smaller than Unit 13 in this way and this would mean that at least its upper portion would have to be written off ecologically. Backup cooling of some sort would probably be required during periods of low water flow.

Clear Lake itself may be large enough to use for once-through cooling with a reasonable temperature rise. However, we are informed that the increased thermal stratification which this practice would cause would aggravate the algae problems, and that the large natural rate of evaporation from the Lake renders it unwise to do anything which would enhance evaporation as warming up the water would. (Horne, 1976.) Being smaller, the Lower Arm (near which geothermal development seems likeliest) would be the most susceptible to these and other thermal pollution effects. On top of all this is the fact that once-through cooling would consume about the same amount of water as would wet towers. This is because the water returned to its source would rapidly cool down to about its initial temperature by evaporation. All in all, once-through cooling seems most impractical for geothermal use in Lake County.

CHAPTER EIGHT - H_2S EMISSIONS

S8.1 A warning

Data concerning steam composition in the Geysers area (and other geothermal areas) are difficult to come by and not very reliable. A natural reason for this is that the composition of steam varies enormously from well to well and, to a lesser degree, even between subsequent samplings of the same well. For example, we have seen data from two of the Geysers Units which show a change by nearly a factor of two in H_2S concentration within a few months. Particularly treacherous in this regard are data collected from wells which have not yet been hooked up to a power plant, as these variations appear to be greatest during the early part of a Unit's life. Another difficulty in predicting the steam compositions for the proposed Units is that not all of the wells which will supply them have been drilled. (This is because the steam suppliers are reluctant to invest money in "fill in wells" until the Unit they are to supply is nearly completed.) A practical difficulty is that steam samples are hard and burdensome to collect and analyze properly. This has caused the available analyses to be few, often incomplete and, in some cases, unreliable in regards to some components.

The situation with the emission data is much the same. In large measure this is due to the quality and quantity of available composition data. The situation is further complicated by a lack of steam field and plant operational records which would be necessary for an accurate calculation of emission rates. Finally, everyone who says anything about the subject seems to have his own unique way of calculating things, and this seems to have introduced numerous

minor inconsistencies into the literature. We will be careful to explain our calculations, but have made little effort to beat everything down to consistency. All we can say is that these inconsistencies and estimates almost certainly introduce an uncertainty into the results smaller than that caused by the quality of the composition data.

S8.2 Steam compositions

Data concerning the gas content of Geysers area steam are presented in Tables 8.1 and 8.2. The gas composition data in the two tables are the same except for the units that they are expressed in. The weight fraction values of Table 8.1 (ppmw) are convenient for calculating emission rates, while the volume fraction values of Table 8.2 (ppmv) are more meaningful chemically and keep the large concentrations of the lighter gases from being deemphasized.

Volumetrically, the order of gases in the Geysers steam from most to least important is: CO_2, H_2, CH_4, NH_3, H_2S, N_2, C_2H_6. Over half of the total is CO_2 alone. The sequence is the same in the case of the Ottoboni wells except for the reversal between NH_3 and CH_4. (The Ottoboni wells cited may actually be part of the "Geysers" group, but this is not clear from the source of the data.) However, the proportions of the gases in the Castle Rock Springs analysis are totally different. NH_3 is the most important gas while CO_2 occupies second place and CH_4 is not important at all. Table 8.3 presents similar data concerning the compositions of condensate samples collected from ten wells in the Castle Rock Springs area. These samples were collected by using an ice cooled condenser, and it is likely that essentially all of the NH_3 and most of the CO_2 and H_2S were retained in the condensate. The water

insoluble gases (H_2, N_2, CH_4, etc.) were, of course, not retained and not analyzed for. NH_3 is seen to be the volumetrically dominant gas here as well though not by as much as in the CRS analysis in Table 8.2. The presence of chloride in the analyses in Table 8.3 is also unexpected, as Griffin et al. (1974) specifically state that there is no chloride in Geysers steam. (The presence of chloride in this steam is bad news, as chloride is highly corrosive.) All this shows how dangerous it is to generalize even over a few kilometers.

The ranges between the "High" and "Low" concentrations of the various gases reported in Tables 8.1 and 8.2 are large. Table 8.4 shows that, at least in the most important case of H_2S, these concentration extremes among wells carry over to differences between Units.

The geochemical origin of these various gases is unclear. It is tempting to assume that they are of volcanic origin simply because of the proximity of dormant volcanoes and because these gases are also typical of the emanations of volcanic fumaroles. However, it is just as plausible that they were cooked out of the reservoir matrix (and, particularly, its minor organic components) by the action of hot, high pressure steam over tens of millenia. The same can be said about the traces of Hg, As and B which are present in the steam, for these elements all form moderately volatile compounds and if they are present in the rock, they can be expected to show up in the steam. The presence of chloride in the Castle Rock Springs steam may indicate some admixture of gases of volcanic origin, but this is by no means certain (White, 1970). The whole question of gas composition clearly deserves closer study since it would be good to understand and predict what

trace contaminants occur in geothermal fluids and why. Also, the gas compositions may prove to be the key to unraveling the properties and origins of vapor producing reservoirs.

Geysers steam also contains a small amount of the radioactive gas radon-222. Data presented by Serpa et al. (1974) indicate a radon concentration of about 1.3×10^{-8} Ci/kg in the steam supply of Unit 7. Stoker and Kruger (1975) report concentrations for ten unidentified wells sampled under flow conditions which range from 0.32×10^{-8} to 3.14×10^{-8} Ci/liter of condensate. (This is the same unit as Ci/kg steam within experimental error.) The source of the ^{222}Rn is the radium-226 which is present in minute concentrations in most crustal rocks. The ultimate source of the ^{226}Ra and, thereby, of the ^{222}Rn is uranium-238 in the rock. (Most natural gas and well water also contain ^{222}Rn on the same account.)

Table 8.5 compares the composition of the gas fractions of the Geysers and CRS steam with those from other geothermal areas. (Wairakei and Cerro Prieto are both liquid producing reservoirs, and the steam analyzed is that produced by flashing in the well bore and above ground rather than by boiling in the reservoir. Lardarello is a steam producing reservoir much like the Geysers.) Most striking is how much more important NH_3, CH_4 and H_2 are at the Geysers and CRS relative to the other gases than at the other areas. The comparison also underlines just how atypical the low CO_2 concentration in CRS steam is.

Table 8.1

Gases and Solids in
Geysers Area Steam (ppmw)

	Geysers[1] Range of Conc. Measured		Geysers[1] Average	Ottoboni State Wells[2]	Castle Rock Springs[3]
	Low	High			
CO_2	290	30600	3260	4123	216
H_2S	5	1600	222	277	96
CH_4	13	1447	194	146	3.6
NH_3	9.4	1060	194	176	140
N_2	6	638	52	47	2.2
H_2	11	218	56	57	2.0
C_2H_6	3	19	Neg		0.03
C_3H_8					0.06
As	0.002	0.050	0.019		
B	2.1	39	16		
Hg	0.00031	0.018	0.005		

[1]Overall average from 61 producing wells measured in 1972-1974. Approximately corresponds to Units 1-10. From Griffin, et al. (1974). Unclear if "Low" and "High" columns refer to individual values or specific wells.

[2]Quoted from California State Lands Commission (1976). Average of 7 wells in Ottoboni State group. Unclear if ammonia reported as NH_3 or NH_4^+ (in condensate sample).

[3]One well from Castle Rock Springs Area. Data courtesy Aminoil USA. This well is somewhat atypical because of unusually high NH_3 content and unusually low total gas content.

Table 8.2

Gases in Geysers Area Steam
(ppmv)

	Geysers Range of Conc. Measured		Geysers Average	Ottoboni State Wells	Castle Rock Springs
	Low	High			
CO_2	120	12500	1330	1687	89
H_2S	3	850	118	146	51
CH_4	15	1628	218	165	4
NH_3	10	1120	205	187	148
N_2	4	410	33	30	1.4
H_2	99	1960	500	517	18
C_2H_6	2	11	Neg		0.02
C_3H_8					0.03

Data same as in Table 8.1, but re-expressed in parts per million by volume. Number of significant digits adjusted to be consistent with Table 8.1.

Table 8.3

Condensate Analyses from
Castle Rock Springs Area

	ppmw			ppmv[1]		
	High	Low	Average	High	Low	Average
CO_2	198	14	49	81	6	20
Total S as H_2S[2]	86	26	64	46	14	34
Total N as NH_3[2]	78.1	9.2	27.1	82.7	9.7	28.7
HCl	8.2	6.2	10.5	4.0	3.1	5.2
HF	0.03	0.06	0.09	0.03	0.05	0.08
B	0.08	nd	0.28	0.13	nd	0.46
SiO_2	1.1	13.6	17.9	0.3	4.1	5.4
Mg	0.25	nd	0.03	0.19	nd	0.02
Ca	0.06	nd	0.05	0.03	nd	0.02
Fe	0.6	0.2	0.2	0.2	0.06	0.06

Based on 12 analyses of condensate from 10 wells in Unit 13 area. Data courtesy of Aminoil USA. "High" and "Low" are the two samples which respectively contained the highest and lowest combined amounts by weight of all components reported. Non-water soluble gases (H_2, CH_4, etc.) presumed lost during collection and not analyzed for. Some (but not very much) H_2S and CO_2 probably also lost. The bottom four reported constituents probably came up as dust rather than as gases.

[1]Actually "molecules per million", which is the same as ppmv for gas mixtures.

[2]Small amounts of SO_4 and NO_3 reported assumed due to air oxidation of H_2S and NH_3 during collection and analysis. Maximum correction on this account 2.6 ppmw.

Table 8.4

H_2S Concentrations in the
Steam of Individual Geysers Units

Unit	Rated Net Power (MW)	H_2S Concentration (ppmw)	(ppmv)
1	11	170	90
2	13	170	90
3	27	450	240
4	27	570	300
5	53	280	150
6	53	250	130
7	53	230	120
8	53	160	85
9	53	110	60
10	53	100	50
11+	106	258	137
(12)*	106	130-170	70-90
(13)*	135	60 - 90	30-50
(14)*	110	110-150	60-80
(15)*	55	130-190	70-100

*Estimated, as these Units do not yet exist.

Data for all Units except 11 from Weinberg (1975). The accuracy of the values is stated to be ± 20%, though the values for 12 to 15 are probably not even that good, since not all of the wells for these Units have been completed.

+Unit 11 value from Allen et al. (1975)

Table 8.5

Composition of Gas Fraction of the Steam at Selected Geothermal Developments (Weight %)

	Geysers[1]	Castle Rock Springs[2]	Lardello[3]	Wairakei[3]	Wairakei[4]	Cerro Prieto[3]
CO_2	81.9	47.0	95.89	97.26	93.86	75.5
H_2S	5.6	20.9	1.032	2.30	4.86	19
CH_4	4.9	0.8	0.074	0.10	0.28	
NH_3	4.9	30.4			0.49	0.955
N_2	1.3	0.5	2.834	0.316	0.30	4.35 (Air)
H_2	1.4	0.4	0.028	0.024	0.07	
C_2H_6	nil	0.02 (incl. butane)			0.11	
He,Ar,Ne			0.14[6]			
Total w%	0.398	0.046	6.5[5]		0.156	∿1.5[7]
Gases in steam			4-20[6]			

[1]Based on "Average" values in Table 8.1.

[2]Same well as in Tables 8.1 and 8.2.

[3]Quoted from Dal Secco (1975).

[4]From Axtmann (1975a). Quoting Wilson (1955).

[5]Quoted from Dal Secco (1975) in reference to Lardarello Plant No. 3.

[6]Quoted from Dal Secco (1970).

[7]Estimated from gas ejector flow rate at Cerro Prieto Unit 2 reported by Mercado (1975).

S8.3 Hydrogen sulfide emissions

Much of this section is based upon a recent review of the air pollution situation at the Geysers by the Northern Sonoma County Air Pollution Control District (1976). The major results of this review are presented in Table 8.6. Although we disagree with some of the details of the NSCAPCD calculations, we accept their results as being about the best that can be done with the available data.

The major emissions are clearly those from the power plants themselves under conditions of routine operation. Most of the H_2S in the steam delivered to the unabated plants (Units 1 to 10) is emitted to the atmosphere. A small fraction of the H_2S is naturally oxidized to other sulfur species such as elemental sulfur, thiosulfate and sulfate and is ultimately reinjected with the excess condensate (or blowdown) in that form. The NSCAPCD has calculated that the reinjected sulfate alone is equivalent to 1.5 to 7.6% of the H_2S coming into the various plants. Further small amounts of H_2S are reinjected as dissolved H_2S or HS^-. Most (60-80%) of the H_2S emitted from Units 1-10 is emitted from the cooling towers. The remainder is emitted from the condenser off-gas exhaust stack. Plant emissions and the possible means of abating them will be further discussed in Chapter XI.

The "well drilling" emissions are those caused by the discharge of steam along with compressed air during the final stages of drilling when the well has already penetrated the top of the reservoir, but has not yet encountered enough steam flow to be considered deep enough. The NSCAPCD estimates that

about 1.4×10^8 kg of steam were released during the drilling of 17 wells in 1974, which corresponds to about 8300 metric tonnes per well. Assuming a typical H_2S concentration of 222 ppmw in the steam (from Table 8.1) gives an estimate of about 1800 kg of H_2S emission per well during the drilling phase. Assuming that this is evenly spread over a week gives an emission rate of about 11 kg/hr.

After a well is completed it must be cleaned of debris and dust by allowing it to discharge directly into the atmosphere for awhile. It must also be flow tested in order to determine its production capacity and, if possible, the volume of reservoir that it draws steam from. The NSCAPCD reports that present practice at the Geysers is to test each new well for about five days, which amounts to a steam release of about 6.3×10^6 kg. Assuming 222 ppmw H_2S, this corresponds to a 1400 kg release of H_2S at an average rate of about 12 kg per hour. It is stated that five days is the bare minimum needed to obtain reliable data. Though the NSCACPD does not reveal the source of this statement, we infer it to be Union Oil. Aminoil's practice is to conduct four eight hour tests (Atlantis, 1975, p. III-28). This can probably be taken as the minimum test duration to establish the well's production capacity. The five day minimum test duration reported by the NSCAPCD may refer to the minimum period required to determine the well's steam supply volume in the reservoir.

A well must be cleaned out anew every time that its flow is turned back on (say, after having been turned off to allow maintenance work on its Unit). There is a fundamental thermodynamic reason for this: during normal production conditions the flowing pressure drop extends well into the

formation. Under (quasi) steady state flow conditions the steam flow is isenthalpic or very nearly so, and this means that the pressure drop causes the steam temperature to drop as it nears the well bore. This has the ultimate effect of cooling the rock near the well bore to well below the "bulk" reservoir temperature. When steam flow is stopped, the pressure at the bottom of the well bore builds up to the saturation pressure corresponding to the "bulk" reservoir temperature which is, of course, greater than the saturation pressure corresponding to the lower rock temperature near the well bore. The inevitable result of this is steam condensation. Futhermore, this moisture causes bits of rock and grit to loosen. When the well is turned back on this water and rock must be blown out and steady state flow conditions reestablished before the well is reconnected to its Unit.

When a well is shut-in its steam flow cannot be shut off completely, as this would cause the well casing to cool down and cause hazardous thermal stresses. This is avoided by allowing a small amount of steam to bleed from the well-head through a small orifice which is typically 6.35 mm in diameter. The NSCAPCD estimates this steam release from a shut-in well to be between 140 and 540 kg/hour which, again assuming 222 ppmw H_2S steam, translates into an H_2S emission rate of 0.03 to 0.12 kg/hour.

The uncontrolled well contribution is mostly due to Thermal 4, a well which blew out during drilling in 1957 and hasn't been successfully controlled since. (The crater it made has been bulldozed over and now the steam seeps out through the soil and several small vent pipes rather than jetting out.) A minor contribution is that of GDC 65-28 which blew out in the spring of 1975 and took four months to control.

"Steam stacked at plant" is steam which is released through a bank of mufflers when a power plant is shut down for less than three days as an alternative to shutting off the wells and having to clean them out upon restart. Stacking at the plant is a greater source of H_2S emission than well cleanout because most plant shutdowns last less than one day. One means of reducing stacking is to connect the wells which ordinarily supply a Unit which is down to the steam supply lines of another Unit. This results in both groups of wells producing sufficient steam to avoid the need for a cleanout afterwards. Six such cross-over lines are now in existence connecting 5 and 6 to 1 and 2, 3 and 4, 7 and 8; 7 and 8 to 11; 7 and 8 to the future site of 12; and 9 and 10 to the site of 14. Another means is the use of so-called V-ball valves which allow stacking at a smaller flow rate. These apparently are not useable with all of the wells, but they are gradually being installed on the more important wells in the place of the older slab-gate valves which could not be partially turned down.

"Pipeline vent" emissions are those associated with the small steam flows which push captured dust and moisture out of the centrifugal separators and condensate out of the condensate traps built into the pipeline systems. Almost half of the steam and condensate which is emitted from these vents is now collected for disposal via reinjection, and this collection system will be expanded to include the rest of the vents. The pipeline systems for the new plants will also all be equipped with such collection systems.

The value given for "natural fumarole" emissions is based on recent measurements by the NSCAPCD which indicate a natural emission rate of about 2.2 kg/hr. The smallness of this number is an excellent reason to doubt the

occasionally heard statements that the H_2S odor in Lake County was as evident before the development of the Geysers as it is now. To be sure, the development of the Geysers probably caused a fair amount of steam to be diverted from natural seepage to productive use, but even assuming that this caused natural emissions to drop by an order of magnitude doesn't get us anywhere near to the present level of emissions.

At present H_2S emissions are overwhelmingly due to the powerplants themselves, but the minor sources will grow in relative importance as the power plant emissions are progressively abated. For example, if the emissions of all of the existing powerplants were abated by 92% as are those of Unit 11 when its abatement systems is fully functional, the fraction of H_2S emissions due to "pre-plant" sources would rise from the present 12.1% to about 60%. A split of this order seems quite likely in future geothermal developments.

The pipeline vent emissions will soon be eliminated while the natural fumarole emissions and bleed emissions are too small to worry about. All three are also constant rate emissions which means that the average values presented in Table 8.6 do not disguise any major peaks. The rather large uncontrolled well emission is also of this nature. The other categories of emissions are sporadic in nature. In the case of well drilling and testing this is not very important, as it seems highly unlikely that more than, say, three wells would be emitting steam in either of these modes at any given time. This means that these emissions, when they occur, do not add very much to the total emissions at that time. However, plant stacking and well cleanout emissions happen simultaneously with plant-sized blocks of wells. This means that, if all powerplants were 92% abated, a full stacking of Unit 11's

steam alone would cause overall emissions to nearly double. Stacking and cleanout emissions clearly deserve second priority after power plant emissions for abatement efforts.

Table 8.7 presents our own best estimates of the H_2S emissions from the Geysers and compares them with Axtmann's (1975b) estimates for selected other geothermal developments. Our Geysers figures include the contributions of the various pre-plant emissions. It is this contribution and that of abatement system downtime which make Unit 11's overall abatement performance rather less good than the instantaneous 92% abatement reported by Allen et al. (1975). Nonetheless, Unit 11's performance is a major improvement over that of the other Geysers Units and shows what even a "first try" abatement effort can accomplish. Also noteworthy is that the Geysers is surpassed only by Wairakei in cleanliness, while Cerro Prieto, which is a hot brine based development just like Wairakei, is the dirtiest development by far. Hopefully, this observation should lay to rest the occasionally heard claims that either one or the other type of geothermal resource is intrinsically cleaner than the other.

Table 8.6

Breakdown of Average 1975 H_2S Emissions
from
Geysers Geothermal Development
(Based on Table III-8 in NSCAPCD, 1976)

Unit	Rated Net Power (MW)[1]	Date on line	Inlet H_2S (Kg/hr)	Annual Average Emissions (Kg/hr)	Percent of Total
1	11	9/25/60	15	14	1.7
2	13	3/19/63	18	17	2.1
3	27	4/28/67	105	99	12.3
4	27	3/2/68	132	125	15.7
5	53	12/15/71	115	108	13.4
6	53	12/15/71	103	98	12.1
7	53	8/18/72	95	90	11.1
8	53	11/23/72	66	63	7.8
9	53	9/15/73	45	43	5.3
10	53	11/30/73	45	42	5.2
11	106	5/31/75	115	(9)*	(1.2)*
		Power Plant Total -	854	708	87.9
		Well Drilling		4	0.5
		Testing and Clean-out		13	1.6
		Well Bleeds		3	0.4
		Uncontrolled Well		33	4.1
		Plant Stacking		28	3.4
		Pipeline Vents		14	1.8
		Natural Fumaroles		2	0.3
		Total Pre-Plant Emissions		97	12.1
		Total Emissions		805	100.0

*7 months emission averaged over full year. Assumes 92% abatement and no abatement system downtime.

[1]Power ratings from Griffin *et al.* (1974)

Table 8.7

Hydrogen Sulfide Emissions of Selected Geothermal Areas

(Autumn 1976; Geysers lower now)

	Rated Power	g/kwh	Metric Tons/ 100 MWy	Metric Tons/ day
Cerro Prieto[6]	75	14	12,400	25
Broadlands[1,2]	200 (est)	6.6	5,800	32
Lardarello[1]	365	5.8	5,000	50
Geysers (Units 1-10)[3]	396	2.3	1,990	22
Geysers (Unit 11)[4]	106	0.5	430	1.2
Geysers Total[5]	502	1.9	1,660	23
Wairakei[1]	192	0.5	500	2

[1]Emissions from these plants recalculated from data presented by Axtmann (1975b). Axtmann's values don't seem to include the contribution of pre-plant emissions.

[2]Estimated, as the Broadlands plant has not yet been built.

[3]Assumes 231 ppmw H_2S in steam (weighed average of values for Units 1-10 in Table 8.4), 3% natural oxidation and a steam rate of 8.9kg/kWh (from Figure 7.2). The data in Table 8.6 suggests that pre-plant venting totals about 1.2 kg/kWh for these Units, and the associated H_2S emissions have been included in our value. Unit 4's burner-scrubber system assumed inoperative.

[4]Unit 11 is equipped with a $Fe(OH)_3$ catalyst H_2S abatement system. Allen et al. (1975) report the attainment of 92% abatement during tests in December 1975 when the incoming steam contained 258 ppmw of H_2S. This corresponds to an impressively low specific emission rate of 0.2g/kWh. Another 0.3g/kWh is due to preplant venting. It is apparent that non-productive venting is responsible for about 60% of this Unit's H_2S output. Until October 1976 Unit 11 emissions were probably greater due to reliability problems.

[5]Weighed average of preceding two rows.

[6]Calculated from 9.4 kg/kWh steam rate and 1500 ppmw H_2S in the steam of Cerro Prieto Unit 2 reported by Mercado (1976).

S8.4 Dispersion of Hydrogen Sulfide

The dispersion of H_2S emitted from the Geysers is determined by the balance between the synoptic (general regional) winds and the valley circulations which are determined by the rugged topography of the area. The prevailing winds are from the west and northwest and range from speeds of less than 7 km/hr in the early morning hours up to 35 km/hr on summer afternoons. During the winter southerly winds of more than 35 km/hr are often associated with precipitation. Overall, wet season winds are stronger than dry season winds and this causes H_2S to dilute and disperse more rapidly during the wet season. During periods of precipitation the wind associated reduction of H_2S concentrations is furthered by the scrubbing action of the precipitation itself and the strong vertical convection normally associated with precipitation. (A historical aside: a convenient flurry of snow and hail instantly dispersed a considerable concentration of H_2S just as President Ford's helicopter touched down on his visit to the Geysers in April, 1975, which led him to erroneously conclude that geothermal energy has no environmental impacts!)

The valley circulations are caused by daytime heating and nighttime cooling of air near the ground. On sunny days the air warmed by the ground tends to flow uphill until it reaches a ridgetop where it is picked up and rapidly diluted and carried away by the prevailing winds. During the nighttime the ground surface cools by radiation and cools the air adjacent to it, causing it to flow downhill and collect in valleys carrying any H_2S it contains with it. By dawn, enough cool air often collects in Big Sulfur Valley to cause a visible inversion with a base at about the elevations of Units 9 and 10 which persists till late morning. This, of course, tends to concentrate the H_2S emitted during the night in the immediate Geysers area.

Swanson and Mooney (1973) have reported a large number of 12 and 24 hour average H_2S concentrations measured by means of "Colortec" detectors, which are specially treated paper slips which change color in response to H_2S exposure. Though this method is not accurate enough to use for absolute concentration measurements, it is quite adequate for making general comparisons. Their results bear out these general meteorological predictions: dry season H_2S concentrations are generally two to ten times higher than wet season concentrations, and nighttime dry season concentrations are generally higher than dry season daytime concentrations. During the wet season, however, day and nighttime concentrations are roughly the same due to the dominance of synoptic winds over valley circulations.

There are two ways for H_2S to get from the Geysers to Lake County. The first is to be carried over the ridge by the powerful wet season winds or the combination of summer afternoon (uphill) valley breezes and synoptic winds. Although these mechanisms are probably capable of carrying most or all of the emitted H_2S into Lake County, they involve such powerful mixing that the H_2S thus carried over is diluted to insignificance. The other way is for the synoptic winds to just barely overcome the nighttime (downhill) valley breezes and push H_2S contaminated cool air through the various gaps and passes in the Macayamas. Once on the other side, this air can drain down into the Cobb Valley undiluted and unimpeded. This transport mechanism is most likely responsible for the occasionally detectable H_2S concentrations which occur in southern Lake County.

The same type of phenomena will govern the dispersion of H_2S emitted from future sources in Lake County. The major difference will, or course, be that the H_2S will be emitted on the Lake County side rather than having its

transport to Lake County depend largely on the occurrence of a rather special match between synoptic and valley circulations. It is clear that concentrations will again tend to be greatest on dry season mornings and that H_2S transport will generally follow the various valleys through the mountains.

S8.5 Present day H_2S concentrations in the immediate Geysers area

Altshuler (1976) has presented extensive data concerning ambient air H_2S concentrations in the immediate Geysers area. He employed an accurate "wet" chemical technique and samples collected over half hour sampling times. Some simultaneous determinations of H_2S and SO_2 were also made using a chromatograph column equipped total sulfur analyzer. Unfortunately, to quote Altshuler directly, "sites on knolls and bluffs were chosen rather than sites in small canyons and ravines to assure good ventilation and air circulation". This choice of sampling sites clearly biases the data toward lower H_2S concentrations as sites with "good ventilation and air circulation" are precisely those where the cleanest air is to be expected. Also, sampling was restricted to daylight hours and days without rain. The first restriction again biases the results toward lower values, while the second biases them toward high values. The overall bias is almost certainly toward lower values, and this must be kept in mind.

37 sampling stations throughout the Geysers development were employed and the average of all measured concentrations was 21 ppbv. The lowest average concentration at a given station was 3 ppbv and the highest 126 ppbv. The low average concentrations were recorded at sites on the periphery of the development, while the highest average was immediately adjacent to Units 3 and 4.

The second and third highest averages were 60 and 53 ppbv recorded near Units 5 and 6 and Units 1 and 2, respectively. The highest single measurement was 878 ppbv at the site near Units 3 and 4. Concentrations exceeding the (1 hour average) California ambient air standard of 30 ppbv were recorded at 27 of the sampling sites, and the concentrations at four sites were above 30 ppbv in 50% or more of the determinations. (This is actually legal as the measurements were all made within the area of the Geysers, and the law recognizes the right to pollute one's own property.)

SO_2 concentrations of up to 10% of the H_2S concentration were sometimes detected under morning inversion conditions. The absence of any SO_2 associated with freshly emitted H_2S was noted and it was concluded that the SO_2 was a product of the atmospheric oxidation of H_2S. The maximum SO_2 concentration recorded was less than 10 ppbv, and thus well below the applicable standards of 40 ppbv maximum 24 hour average and 50 ppbv maximum 1 hour average.

S8.6 Present day H_2S concentrations in southern Lake County

PG&E, Union Oil, Pacific Energy and Aminoil have recently funded the Stanford Research Institute to install and operate (for two years) a network of eight automated H_2S monitoring stations and associated meteorological monitoring equipment. Their locations are shown on Figure 8.1, as are the wind flow patterns which are presumed to be responsible for most of the ground level H_2S in Lake County. The first two quarterly reports on this work have been issued(Cavanagh and Ruff, 1976; Ruff and Cavanagh, 1976). The main results

are nicely summarized in Table 8.8 which we have copied in toto from the latter report. It is clear that the ambient air quality standard is frequently violated at the county line, and also that it is only very rarely violated in Cobb Valley. However, concentrations above 10 ppbv are not at all uncommon in the Cobb Valley. As we shall see in the following Chapter, 5 ppbv is the average threshold concentration for smelling H_2S and almost everyone is capable of smelling it at 10 ppbv. The conclusion is obvious: although the ambient air quality standard is only rarely violated in the Cobb Valley, there are frequent occasions on which H_2S concentrations are readily perceptible. This is the simple truth behind all of the odor complaints from the inhabitants of the Cobb Valley. The unfortunate fact is that the existing air quality standard simply does not provide complete protection against the H_2S odor nuisance that now exists in Cobb Valley.

Very occasionally H_2S odor has been noticed further into Lake County. It is plausible that H_2S from the Geysers may penetrate a few kilometers beyond the Cobb Valley by way of the various connecting valleys. However, this explanation fails to account for Swanson and Mooney's (1973) report of measureable H_2S concentrations in Lakeport and Lower Lake. A much likelier source of this H_2S is decomposing organic material in Clear Lake or the boggy areas near some parts of its shore.

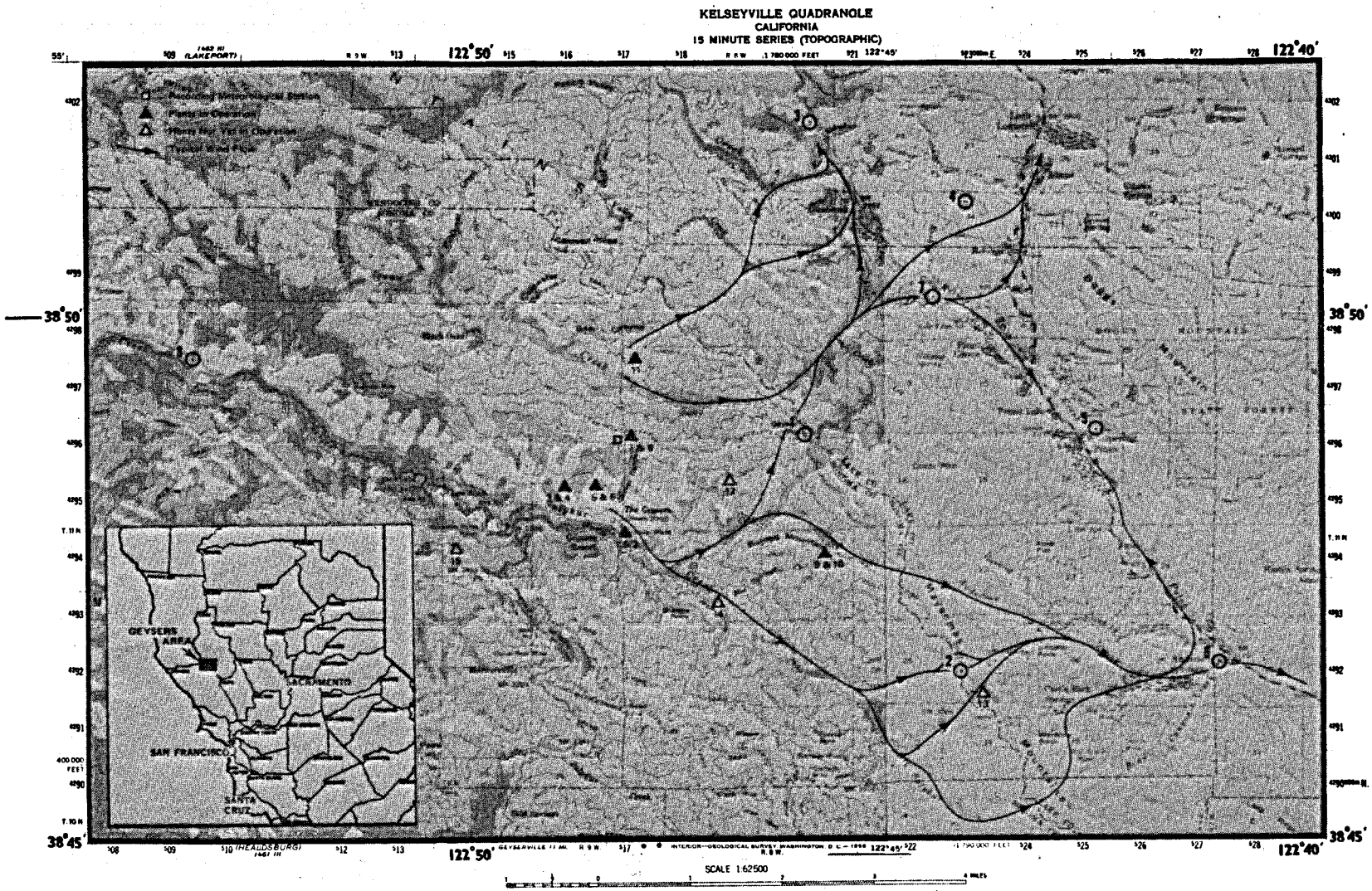

Fig. 8.1 Location and layout of the Geysers monitoring network with wind flow patterns. Reproduced from Cavanaugh & Ruff (1976) by permission of PG&E.

Table 8.8

H_2S FREQUENCY OF OCCURRENCE SECOND QUARTER

(APRIL, MAY, JUNE) 1976

Station	Hourly Averages Equal to or in Excess of				Number of Valid Points
	40 ppb	30 ppb	20 ppb	10 ppb	
1 (Geyser Rock)	34	71	161	353	2071
2 (Anderson Ridge)	103	181	348	689	1703
3 (Kahm Ranch)	2	12	37	132	2029
4 (Pine Summit)	1	2	8	48	2062
5 (Whispering Pines)	0	2	30	121	1972
6 (Anderson Springs)	0	4	14	60	2027
7 (Sawmill Flats)	0	2	17	99	1850
8 (Aidlin Ranch)	11	41	88	173	2039

From Ruff and Cavanaugh (1976)

S8.7 The History of H_2S emissions and their future

Table 8.9 contains our best estimates of past, present, and near future H_2S emissions from Geysers Units 1-12. Units 13, 14 and 15 are also expected to go on line on about 10/1/79, 10/1/78 and 10/1/78, respectively, but we haven't included their emissions as it seems highly premature to estimate the H_2S abatement efficacy of their surface condenser systems at this time.

The NSCAPCD notes that H_2S odor complaints began in volume in about 1972 and suggests that a "nuisance threshold" emission level was reached at about that time. Table 8.9 suggests that this threshold is around 400 or 500 kg/hr, and that the commissioning of Units 5 and 6 caused it to be reached. 1975 and 1976 are seen to be the worst years on record, with 1976 average emissions at least 50% above the "nuisance threshold". However, the projected iron catalyst system retrofitting of Units 3 to 6, which is scheduled to be completed by about the last quarter of 1977 will cause a dramatic drop in H_2S emissions down to below the 1972 level by 1978. The commissioning of (iron catalyst abated) Unit 12 in late 1978 will cause only a minor increase in average emissions.

However, it must be remembered that average emissions do not have the same relationship to maximum emissions in the case of abated plants as they do in that of unabated plants. For example, Unit 11 receives the same amount of H_2S in its steam as Units 3 and 4 together: about 245 kg/hr. If Units 3 and 4 were forced out simultaneously and their steam stacked, H_2S emissions would not change significantly, because (neglecting the few percent natural oxidation in the plants) the same amount of H_2S which is normally emitted from the powerplants would now simply be emitted from the stacking mufflers. On the

other hand, if Unit 11 were forced out and its steam vented, H_2S emissions would increase by about 225 kg/hr because the 92% abated H_2S flow through the plant would be replaced by a 0% abated flow through the mufflers. Basically, what this means is that, when abated power plants are present, the actual instantaneous emission rate has peaks far higher than the average emission rate; for example, at the time of writing (September 1976) the stacking of Unit 11's steam causes the emission of H_2S to rise to about 950 kg/hour. This problem will, of course, become worse as the mix shifts toward even more abated Units. Although the volumes stacked will be reduced in the future, stacking will never be completely eliminated. About the only course of action available is to try to avoid stacking the steam supply of more than one abated Unit at a time in order to keep the size of the peaks under control.

The big remaining question is, of course, how much H_2S Units 13, 14, and 15 will emit. The best possible scenario is that their abatement systems will approach 100% efficiency during normal operation, thereby causing a total average emission increment on the order of 20-40 kg/hr which would be due mostly to pre-plant emissions. However, even in this happy circumstance they would considerably increase the frequency of stacking related emission peaks. Particularly disturbing in this respect is the thought of Unit 13's steam being stacked during a windless summer might, poised, as it is, directly above the town of Anderson Springs; we can only hope that the buoyancy of the steam will suffice to punch it on up through the radiation inversion and away from the ground. The absolute worst that could happen is a complete failure of their abatement systems, but this doesn't seem at all likely. A more plausible "worst possible case" would be 50-60% abatement, resulting

Table 8.9

Estimated Historical and Projected H_2S Emissions, Geysers Units 1-12*

Year	Total steam production (10^9 kg/year)[1]	Preplant steam releases (% of total)[1]	Average H_2S emissions from plants (Kg/hr)[2]	Average preplant emissions (Kg/hr)[3]	Average total H_2S emissions (Kg/hr)[4]	Average total (g/Kwh)[5]	Units put on line (Date)	Units Retrofitted (Date)
1960	1.91	83.9	5	50	55	14	1(9/25)	
1961	2.00	56.1	15	30	45	4.0		
1962	2.03	54.6	15	30	45	3.8		
1963	2.73	46.5	25	30	60	3.2	2(3/19)	
1964	3.54	51.9	30	45	80	3.6		
1965	3.45	53.4	30	45	75	3.7		
1966	3.82	60.6	30	60	85	4.5		
1967	4.64	33.1	100	40	140	3.5	3(4/28)	
1968	5.21	18.9	185	25	210	3.9	4(3/2)	
1969	7.56	26.9	250	50	300	4.2		
1970	7.71	38.7	210	75	290	4.7		
1971	8.62	37.5	235	80	320	4.6	5,6(12/15)	
1972	16.45	16.2	475	65	540	3.1	7,8(8/18,11/23)	
1973	22.28	14.8	560	85	645	2.6	9,10(9/15,11/30)	
1974	27.41	11.5	620	80	700	2.3		
1975	31.70	10.7	645	85	730	2.0	11(5/31)	
1976	34.7	11	655	95	755	1.9		3,4(12/31)
1977	35.8	11	435	100	535	1.3		5,6(10/1)
1978	38.0	11	305	105	410	0.9	12(10/1)	
1979	44.3	11	315	125	440	0.9		

Notes for Table 8.9

*Note that Units 13, 14 and 15 are not included in this tabulation, although they are expected to go on line approximately 10/1/79, 10/1/78 and 10/1/78, respectively. New Unit and retrofit dates are approximate. (C.J. Weinberg, private communication.) Retrofits with iron catalyst system.

[1]1960-75 data from NSCAPCD (1976). 1979 steam production figures estimated as follows: steam production associated with Units 1-10 assumed constant at 1974 levels. Steam production rate associated with Unit 11 calculated on this assumption, and assumed to hold in 1976. In 1977-79 availability of Unit 11 is assumed to be 87% (approximately that of the other Units) rather than the 76% recorded in the last 7 months of 1975 and its associated steam production is estimated to rise accordingly. Unit 12 assumed to take steam at the same rate as Unit 11 after it comes on line. Figures do not include steam losses during drilling.

[2]Unabated Units assumed to emit 97% of H_2S coming into them. (3% natural oxidation.) In 1975 and 1976 Unit 11 is assumed to suffer 10% abatement system downtime with the result that it emits 17.2% of the H_2S coming into it. In 1977-1979 the abated Units are assumed to emit 8% of the H_2S coming into them. Total quantity emitted from plants during any given year calculated as

$$Q = S \times F_p \sum_{i=1}^{12} f_i \, c_i \, P_i \, e_i \Big/ \sum_{i}^{12} f_i \, P_i$$

where S is the steam production that year, F_p is the fraction going to the plants, P_i is the net power rating of plant i, f_i is the fraction of that year that it's on line, c_i is the concentration of H_2S in its steam supply, and e_i is the fraction it emits.

[3]Assumes 222 ppmw H_2S in preplant steam releases

[4]Sum of previous two columns - A few values are inconsistent because of rounding.

[5]Assumes 8.9 kg/Kwh steam flow to plants

in an increase in average emissions of about 105 kg/hr. (These Units would almost certainly not be licensed to operate by the Public Utilities Commission if they did any worse than this, not to mention what the probable reaction would be in Lake County!) This would still give a total 1979 average emission rate considerably below that of 1975, though accompanied by a somewhat more serious peak emission problem.

All in all, the expansion and retrofitting of the Geysers development through the end of 1979 will probably result in a moderate but quite tangible overall improvement in the H_2S situation, although steam stacking related emissions will probably contribute to a frequency of nuisance episodes greater than that which might be inferred from the considerably reduced average emission rate alone. However, air quality in the town of Anderson Springs might be degraded to an as yet unpredictable degree due to its proximity to the site of Unit 13. These predictions are, of course, utterly dependent upon the retrofitting schedule being adhered to and the abatement systems working as they should.

S8.8 The Atmospheric Chemistry of H_2S

Although the study of the atmospheric chemistry of air pollutants is a science notorious for its inconclusiveness, at least the major pathways of sulfur emitted as H_2S to its final form as sulfate particulates seem well established.

Available information concerning the oxidation of H_2S to SO_2 has recently been reviewed by Sprung (1975) with particular reference to the fate of geothermal H_2S emissions. He estimated what the concentrations of the various

possible H_2S oxidants were likely to be in the several geothermal areas in California, and then inserted a typical set of these concentrations into the best available kinetic expressions for the various possible reactions in order to determine their relative importance.

He determined the most important pathway to be

$$H_2S + OH \longrightarrow HS + H_2O$$

$$HS + O_2 \longrightarrow SO + OH$$

$$SO + O_2 \longrightarrow SO_2 + O$$

(In the last two reactions the oxygen molecule is in its $^3\Sigma$ ground-state.) He also found that the reaction

$$SO + NO_2 \longrightarrow SO_2 + NO$$

was a minor alternative pathway for the second step which accounted for about 6% of the total reaction. He estimated the mean residence times for H_2S, HS and SO to be 18 hours, less than 2×10^{-3} seconds, and 8.8×10^{-3} seconds, respectively. The first step is clearly rate determining.

Sprung considered the possibility of catalytic oxidation mechanisms only in that he noted that the formerly popular theory that heterogeneously catalyzed reaction with ozone was important is incorrect. However, we feel that the possibility of catalysis should not be discounted, particularly in view of the extraordinarily successful catalytic oxidation by iron salts that has been achieved in the cooling water of Geysers Unit 11. It seems quite possible that water droplets containing dissolved iron (from iron rich condensation nuclei, for example) and sufficient ammonia to enhance the solubility of H_2S in them might provide an important alternative pathway under some circumstances.

The subsequent oxidation of SO_2 to sulfate is less well understood, but one thing is clear: this reaction <u>is</u> catalyzed, because the known homogeneous reaction pathways are all much too slow to be important. Water droplets containing small amounts of transition metal salts or ammonia are known to greatly speed up the reaction. The reason that ammonia in water is an effective catalyst is apparently that the reaction of sulfite ion ($SO_3^=$) with oxygen is quite rapid and, of course, ammonia reacts with SO_2 to give sulfite in aqueous solution. The full reaction pathway in the presence of ammonia and water droplets is:

$$2NH_3(g) + SO_2(g) \longrightarrow SO_2(aq) + 2NH_3(aq)$$

$$SO_2(aq) + H_2O \longrightarrow H_2SO_3$$

$$H_2SO_3 + 2NH_3 \longrightarrow SO_3^= + 2NH_4^+$$

when they contain small amounts of dissolved transition metal salts or when ammonia is present.

$$SO_3^= + 1/2\ O_2 \longrightarrow SO_4^=$$

The sum of these reactions is

$$2NH_3(g) + SO_2(g) + 1/2\ O_2(g) + H_2O \longrightarrow 2NH_4^+(aq) + SO_4^=(aq)\ .$$

In other words, ammonia and SO_2 react with oxygen in aqueous solution to give a solution of ammonium sulfate. Under suitable conditions (i.e., foggy with some ammonia present) this pathway is probably fast enough to insure a mean SO_2 residence time of no more than a few hours. (The foregoing discussion was based mostly on the review by Hidy, 1973.)

Unfortunately, this pathway does not explain SO_2 oxidation in dry weather which also seems to occur at a reasonable rate although not as quickly as in the presence of water. Another catalytic pathway has recently been demonstrated by Novakov et al. (1974): catalysis on the surface of soot particles to give sulfuric acid and solid sulfates attached to the soot. This mechanism nicely explains the production of sulfates in dry polluted urban atmospheres.

The importance of these reactions is that both H_2S and sulfates are rather worse things to breath than SO_2. The destruction of H_2S is not, in and of itself, very important environmentally because the H_2S is diluted to inconsequentially small concentrations by the time any significant fraction of it has been oxidized. However, the formation of sulfate may be important because at least some of this sulfate is formed over the Central Valley which already has a sulfate problem (among others) because of automobile emissions. The amount of sulfate contributed to Central Valley air by the Geysers H_2S emissions depends upon the rate of oxidation and the transport time, neither of which can be reliably determined on the basis of available information. However, this is clearly a question which deserves further attention, as the Geysers may quite possibly be the largest single source of atmospheric sulfur compounds in California. By way of comparison, the total daily SO_2 emissions from the 19 petroleum refineries in the Los Angeles air basin have been estimated at about 15.4 metric tonnes per day, which is, on a volume (or mole) basis equivalent to 8.2 tonnes of H_2S per day. The total SO_2 emissions from Bay Area refineries are about 54.4 tonnes per day, which is equivalent to about 29 tonnes of H_2S per day (S.F. Chronicle, 1975).

S8.9 Addenda and Errata

The Authorities to Construct which have been issued by the NSCAPCD for Units 12, 14 and 15 require that research on eliminating preplant H_2S emissions be instituted, and that Units 3 to 6 be retrofitted.

It has been pointed out that our assignment of 21% of the preplant emissions to Unit 11 (proportional to its power) is rather arbitrary (cf., Table 8.7) since the uncontrolled well has nothing at all to do with Unit 11, its wells are already all completed, and so on. We grant that this is arbitrary, but have been forced to do so because any possible improvement on this procedure would have led to complications much greater than the possible improvement justifies.

It should be remembered that only those emissions associated with routine plant operation and abatement system malfunction (without plant outage) are the legal responsibility of PG&E; preplant emissions are the responsibility of the steam producers, since the steam belongs to PG&E only beyond the point at which it enters the power plant (plant stacking occurs before this point).

Mercado (1976) has recently presented new steam composition data for Cerro Prieto. Most immediately relevant is his statement that the steam at the turbine inlet of Unit 2 contains 110 ppmw NH_3, 1500 ppmw H_2S, and 14100 ppmw CO_2. He also states that the steam rate is 9.4 kg/kWh. However, he also states that each of the two Units generates 37,500 kW and normally takes 285,450 kg/h of steam, which corresponds to a steam rate of 7.5 kg/kWh. Considering the steam quality (160°C and 5.17 bar) reported by him, we consider 9.4 kg/kWh to more likely be correct.

Crecelius et al., (1976) have reported a suspiciously low figure of 140 kg/hr for the H_2S emissions from the Cerro Prieto development. This is so much lower than any other of the estimates we have seen (or made ourselves) that we reject it as erroneous.

The "per day" and "per year" values in Table 8.7 refer to a full day or a full year of continuous operation. This leads to calculated emission values somewhat greater than the actual average emissions because it ignores periods during which the plant is down and the wells shut in. In the case of the Geysers this amounts to about 10%.

Tables 8.7 and 8.9 are slightly inconsistent in their treatment of Unit 11's emissions in that the latter allows for 10% abatement system downtime, while the former does not. This downtime has probably been eliminated as of the time of writing (11/76) and, therefore, Table 8.7 reflects the situation better at this time.

CHAPTER NINE - HYDROGEN SULFIDE: POSSIBLE HEALTH EFFECTS AND ODOR

S9.1 The purpose of this chapter is to cite some of the literature available on these subjects. The review is informative rather than bibliographic: for lengthy bibliographies, the reader is referred to the reviews by the Illinois Institute of Environmental Quality (1974) and Miner (1969). We present summaries of and quotations from what we believe to be important sources. Particular attention has been given to a number of important Soviet articles which have been largely or completely ignored by earlier American reviewers. Loginova (1957) and Duan (1959) are the only articles we found which deal extensively with H_2S effects at concentrations similar to those found near the Geysers. (The first of these is available in good English transalation.)

Two major caveats before proceeding further: first, this chapter is written by someone who is not a physician, toxicologist, or anything else of the sort. Therefore, it can hardly be considered definitive; rather, it is merely intended to try and satisfy an obvious need for accessible information on the subject of H_2S. Second, for all anyone knows, there may well be other malodorous and toxic sulfur compounds in the steam (such as mercaptans, carbon disulfide, or other organic sulfur compounds) which haven't been detected simply because they haven't been analyzed for. From what we've seen of the quality of the steam composition data, it would not surprise us! After all, other industrial sources of H_2S pollution like pulp mills and rayon plants generally emit such compounds along with H_2S; there is no justification for excluding this possibility

in the case of geothermal energy development. Therefore, the scope of this Chapter may not really be broad enough to encompass the whole problem. (Conversely, most of the literature cited deals with the effects of mixtures of H_2S and other pollutants rather than with the effects of H_2S alone.)

Throughout, concentrations are expressed in terms of Parts Per Million by Volume (ppmv) and Parts Per Billion by Volume (ppbv). Remember that 1 ppbv = 1 ppmv/1000. Also, 1 mg/m^3 = 0.66 ppmv.

Section 9.2 covers the acute effects of H_2S at concentrations above about 100 ppmv. No one has ever been poisoned like this at the Geysers. We discuss acute poisoning mainly because its symptoms are so obvious. Some of them (nervous system effects, eye irritation and nausea) may be found in milder form at lower concentrations.

Section 9.3 deals with the much milder poisoning which sometimes results from prolonged exposure to a few ppmv, as in industry. Exposure to these concentrations is quite conceivable among the workers at the Geysers.

At levels typical of industrial exposure the effects may be subtle enough for their detection to require close or complex observation. The effect may not be a specific symptom (nausea, etc). For example, it may simply express itself as an increase in menstrual irregularity or runny noses – neither of which is either uncommon or desirable. To detect such an effect requires a fairly sophisticated statistical analysis involving the health records of many people and a carefully planned and executed study. It may be difficult to separate the effects of the given substance being studied from those of other potential toxins or non-chemical

environmental factors. This is an important consideration in interpreting the H_2S industrial toxicology literature, as much of it deals with the viscose rayon industry, in which workers are exposed to carbon disulfide (CS_2) as well as H_2S.

Section 9.4 describes how people may react to concentrations of a few tens to a few hundreds of ppbv which exceed the present California Ambient Air Quality Standard (AAQS) of 30 ppbv, but are often found in the inner Geysers area. These concentrations have been known to be caused by inadequate sewage disposal systems and some types of industrial operations.

Section 9.5 reviews what little is known about the effects of H_2S on people at concentrations below 30 ppbv. Such concentrations are already sometimes found in the Cobb Valley and could conceivably become commonplace throughout large areas of Lake County if large scale geothermal development occurs.

Effects at these very low levels are very difficult to demonstrate if, indeed, they exist. All the same problems which complicate resolving the question at concentrations of a few ppmv are present plus new ones. For example, an industrial toxicologist can, if he so desires, talk to hundreds of workers, carefully select study and control groups from different shops, and examine his subjects' complete medical records. A public health hygienist, on the other hand, must usually rely on complaint records which may or may not be complete or consistent from place to place and, perhaps, use questionnaires in a survey. Such difficulties are completely avoided in laboratory studies; however, such low concentrations simply will not cause symptoms within the time and subject number limits

of such a project. Rather, if anything can be found, it might be a physiological change or merely a perception of odor. Though this change may be very well characterized, the question remains: will this change lead to illness?

Section 9.6 discusses the odor perception threshold question. It turns out that the lowest published determinations indicate an average threshold concentration of about 5 ppbv, although some people may be able to smell it at levels as low as 1 ppbv. Most people can smell it at 10 ppbv and above. This observation demonstrates that the number of odor complaints coming from the Cobb Valley is consistent with the measured H_2S levels. Section 9.7 discusses the H_2S Ambient Air Quality Standards of various constituencies and the basis upon which they rest.

S9.2 Acute toxicity (50 ppmv to 2000 ppmv). The effects of very high concentrations of H_2S are summarized in Table 9.1. CARB (1970) also quotes Yant (1930) to the effect that concentrations of H_2S above 1000 ppmv cause death in a few minutes. Patty (1949) and Poda (1966) note that high concentrations of H_2S paralyze the olfactory nerves and weaken or block the perception of its smell. Patty places the concentration threshold for this effect at about 200 ppmv and Poda places it at about 100 ppmv. Poda also states that persons exposed to a concentration of H_2S high enough to render them unconscious report perceiving its smell as sickly sweet, rather than as resembling the "rotten egg" odor of lower concentrations. He suggests (for industrial workers) a "rule of thumb – if you can smell the characteristic "rotten egg" odor of H_2S, you can escape from a gas contaminated area." (Poda, 1966).

Evans states that the toxicity of H_2S is roughly comparable to that of hydrogen cyanide, and that the modes of action of the two gases are probably the same. The anions of both of these (weakly) acid gases bind to the metal ions of certain enzymes (particularly iron bearing enzymes) and, thereby, inactivate the enzymes. (Also see IIEQ (1974) and the references therein). The effects of hydrogen sulfide and its anions on gross physiological parameters are apparently fully reversible, and H_2S does not accumulate in the body. Nerve tissue is apparently the most sensitive to H_2S and death from acute H_2S poisoning takes the form of respiratory paralysis (Evans, 1966).

Poda (1966) has presented a detailed review of the symptomology of acute H_2S poisoning based on the medical records of the Dana heavy water plant which operated in the years 1951-57 near Terre Haute, Indiana. A total of 123 cases of H_2S poisoning are discussed, 25 of which involved loss of consciousness, but only two of which required artificial respiration. There were no deaths. The acute symptoms exhibited by ten or more people were: weakness (33), nausea (29), dizziness (27), headache (26), nervousness (20), eye watering or burning (13), and clinical shock (11). The major delayed symptoms (exhibited by ten or more persons more than 4 hours after exposure) were: nervousness (27), headache (19), nausea (18) and insomnia (12). These last four symptoms plus a dry cough together constituted a syndrome exhibited by "practically all persons who recieved enough gas to either stagger them or render them unconscious." This syndrome proved easy to treat by means of simple medication. Three categories of unusually susceptible workers were identified. First, people

who had been drinking within 24 hours of coming to work (but were completely sober at work) were overcome by concentrations of H_2S much lower than those involved in the other cases. Second, people with perforated ear drums, in whose case portable respirators did not offer adequate protection because of contaminated air seepage into the ear. Third, people with mental illnesses had their conditions seriously aggravated by H_2S poisoning – Poda states that these were the worst of all cases, and took the longest to recover.

On the morning of November 24, 1950, a flare which burned H_2S removed from natural gas by a partially completed but operative desulfurization plant in Poza Rica, Mexico malfunctioned. This happened at 4:50 AM under conditions of pronounced inversion and low wind speed. The H_2S release lasted about 20 minutes. The houses in the area were of the sort intended to maximize ventilation and, thereby, offered no protection from the H_2S. McCabe and Clayton (1952) describe the result:

> "Distribution of Cases: Human. The 22 persons who died ranged in age from 2 to 50 years. Of these, 9 persons were under 13 years of age, 10 were between 14 and 35 years, and 3 were between 36 and 50 years.
>
> The hospital record showed that the 22 fatalities occurred according to the following chronological order: 9 persons were dead upon arrival; 4 died within 2 hours of arrival; 4 died within 6 hours of arrival; 1 died 24 hours after arrival; 1 died 2 days after arrival; 1 died 5 days after arrival; 1 died 6 days after arrival; and 1 died 9 days after arrival.
>
> In all 320 persons were treated. The following is a summary of their hospitalization: one hundred seventy were discharged after two to three hours; 90 were discharged after six to seven hours; 32 were discharged after several days, and 13 died in the hospital.
>
> Animal. An undetermined number of canaries, chickens, cattle, pigs, geese, ducks, and dogs lived in the affected area. All the canaries in the area were reported dead after the incident. It is estimated that approximately 50% of the other animals in the area died during this period."

Table 9.1

Effects of Inhaling Large Concentrations of H_2S

(From Henderson and Haggard, 1943)

Concentration of H_2S (ppmv)	
20	Maximum allowable concentration for prolonged exposure
70-150	Slight symptoms after exposure of several hours
400-700	Dangerous after exposure of 30 minutes to 1 hour
800	Fatal in exposure of 30 minutes

Table 9.2

Frequency of Symptoms and Signs in Forty-Seven Hospitalized Patients
(Poza Rica; from McCabe and Clayton, 1952)

	Cases	
	No.	Per Cent
1. Nervous System		
Loss of sense of smell	47	100.00
Severe headache	29	61.7
Unconsciousness	25	53.2
Conjunctival Irritation	13	27.6
Convulsions	8	17.0
Vertigo	7	14.9
Hypertonia	2	4.2
2. Respiratory System		
Dyspnea	18	38.3
Cough	14	29.8
Pulmonary edema	9	19.1
Pulmonary congestion	5	10.6
Bronchopneumonia	3	6.4
3. Digestive System		
Nausea	15	31.9
Vomiting	11	23.4
Dysphagia	3	6.4
Diarrhea	1	2.1

S9.3 Toxicity at concentrations occurring with occupational exposure (1 ppmv to 50 ppmv)

We begin with four reports concerning the health of viscose rayon plant workers, who are typically exposed to both H_2S and CS_2 (carbon disulfide). Be aware that it is difficult to assign these various symptoms to either one or the other gas.

A description of what happened to workers in the early rayon industry is given in a classic report by the Pennsylvania Department of Labor and Industry (1938). Various common symptoms like irritability, chronic fatigue, loss of memory, hallucinations and brain lesions are discussed. The authors attributed most of them to CS_2 because the workers who developed them had been exposed to very high concentrations of CS_2 but little or no H_2S. The only symptoms attributed specifically to H_2S are various sorts of eye irritation. For example, 159 workers who filled out questionnaires reported: irritation of eyelids (56), inflammation of eyelids (72), pain in eyes (54), feeling of sand in eyes (68), photophobia (61), tearing or burning in eyes (31) and haloes around lights (34). These symptoms were apparently found mostly among spinning room workers who were exposed to moderate concentrations of both gases (and were the best represented shop in the sample by virtue of being the largest shop in the plant). Unfortunately, the Pennsylvania report makes no mention of the gas concentrations which existed in the two plants studied.

Rubin and Arieff (1945) questioned and examined one hundred rayon plant workers. At the time of the study (1944) typical gas concentrations in the men's work environment averaged 1.6-4.0 ppmv H_2S and 1.9-5.1 ppmv CS_2.

In previous years, however, reported CS_2 averages were sometimes above 20 ppmv. Some of the workers slept badly and some felt sluggish, but this complaint was largely limited to shift workers. More interesting were the neurological symptoms recorded: bilateral increases in tendon reflexes (23), pathological reflexes (8), decreased arm movements associated with walking (7), decreased corneal reflexes (16), decreased superficial reflexes (21), sluggish pupillary reflexes (6), and diminished hearing (16). However, these authors reviewed the data then available concerning the incidence of these various conditions in people not exposed to the gases and concluded that the numbers of the various symptoms recorded were not really significantly higher than among similar unexposed populations. Their main conclusion was that they could find no hard evidence for chronic poisoning. However, neither did they prove that the gases were not causing these effects in at least some of the workers; rather, they simply found the available data to be insufficient to resolve the question either way.

Glebova (1949) described a well defined and serious syndrome exhibited by several breast feeding infants and young children whose mothers worked in the spinning shop of a rayon plant. The children were kept in a nursery near the plant and breast-fed by the mothers during work breaks. The children fed normally but soon after feeding they would vomit. They had digestive upsets, developed poorly and gained weight slowly and irregularly if at all. The children were pale, reacted weakly to their environment and were unusually susceptible to infections. The correlation of this condition with the mothers' occupational H_2S and CS_2 exposure was clear. Only those breast feeding children whose mothers worked in the spinning room (where the gas concentrations were highest) developed the syndrome — children whose mothers worked in other shops did not.

Glebova noticed that when these women came to the nursery to breast feed their children, their clothing, which they did not change before feeding their children, exuded a distinct "spinning room" odor. She proceeded to collect and analyze samples of air from inside the mothers' clothing immediately after they left work in order to determine what the children were breathing while they were nursing. She found 18-36 ppbv of H_2S and no CS_2. Her conclusion was that the syndrome was caused by the children being poisoned by the H_2S seeping from their mothers' clothing while they were feeding. The children recovered quickly and completely when their mothers were transferred to other departments in the plant.

Besides the obvious inference that nursing mothers should not be allowed to work under conditions of H_2S and/or CS_2 air contamination, Glebova also concluded that small children are gravely susceptible to poisoning by H_2S, even at concentrations below 36 ppbv. However, we have serious doubts about the validity of this conclusion. The acute syndrome described by Glebova is very different from the low grade, subtle effects which all other available information concerning this low concentration regime suggests. A more plausible explanation which fits the facts equally well is that chronic occupational exposure to the gases caused the mothers' breast milk to contain fat soluble toxic sulfides. This interpretation is supported by Glebova's comment that H_2S concentrations 1 kilometer away from the plant were sometimes as high as 33 ppbv. All but one of the affected children were in a nursery 800 meters away from the plant, and it seems highly likely that the <u>unaffected</u> children were sometimes exposed to

comparable H_2S concentrations in the ambient air without developing the syndrome. Nor is it clear that the effects were due to H_2S rather than CS_2. For these reasons we have chosen to include our discussion of Glebova's paper in this Section as an occupational problem (albeit an indirect one).

Vasilieva (1973) studied the menstrual functions of three groups of female viscose rayon plant workers between the ages of 20 and 40. The first group of 500 women worked in the spinning shop of the plant, where CS_2 concentrations of more than twice the USSR occupational exposure standard of 3 ppmv were sometimes encountered, but H_2S did not exceed the corresponding standard of 6.6 ppmv. The second group of 209 women worked in the finishing shop where both gases were present but neither ever exceeded the given standard. The third (control) group worked in the spooling and sorting shop, where neither gas was present in appreciable quantity. Vasilieva's chief results are presented in Table 9.3. The difference between the two exposed groups and the control group is large and, because of the large size of the groups, the inferences drawn are probably free of errors associated with inadequate sample size. Vasilieva also noted that the incidence of irregular menstruation and dysmenorrhea increased with increasing time on the job. In particular, of those spinners who had worked less than 5 years, $1.8 \pm 1.2\%$ had irregular menstruation, of those who had worked 6-10 years, $4.7 \pm 1.8\%$, and of those who had worked there more than 10 years, $11.7 \pm 2\%$ ($P < 0.001$). Finally, Vasilieva exposed female rats to the conditions in the shops, and found that their estrual cycles became longer and less regular.

Vasilieva's results merely prove that a combination of CS_2 and H_2S has an effect upon the menstrual cycle. The degree to which either one of these gases was responsible for the symptoms observed is not possible to determine from her data.

As a follow up to Vasilieva's work, Bariliak, Vasilieva and Kalinovshaja (1975) exposed female (and male) rats to H_2S and CS_2 levels of 6.6 ppmv and 3.0 ppmv respectively, and noise levels of 90 dB before and during pregnancy. The number of miscarried embryos and the cytological and anatomical effects upon the newborn rats were studied.

Six groups of rats were used:

1) Both males (M) and females (F) exposed to stated conditions for 70 to 90 days prior to mating, females kept under experimental conditions for duration of pregnancy.

2) F exposed as above, M not exposed at all (kept in vivaria under ordinary laboratory conditions).

3) M exposed as above, but not F.

4) F exposed only during pregnancy.

5) F exposed for 70 to 90 days, kept in vivaria under ordinary laboratory for additional 70 days, and then mated, but not exposed during pregnancy.

6) Control - neither females nor males exposed.

After giving birth, both the females and their litters were sacrificed and autopsied. The number of corpus lutea in the female's ovaries were counted in order to find out how many ova had been released. The number of implantation sites in the uterii were counted in order to

determine the number that were fertilized and successfully attached to the uterine wall. These numbers were then compared to the number of live births, thereby giving the pre- and post-implantation embryo losses. The results are given in Table 9.4. Noteworthy is the fact that exposing the males alone (group 3) had almost the same effect as exposing the females. Also, exposure of the females during pregnancy alone (group 4) apparently had less effect than exposure before pregnancy alone (group 5).

Various cytological and anatomical effects were also noted. Quoting the English language abstract:

> "Prolonged exposure to the agents gives an embryotoic effect at the pre- and post-implantation stages and they are responsible for the appearance of abnormalities of predominantly genito-urinary and bone systems in a small amount of embryos, disturb embryonal blood formation and the ossification process, result in severe changes of the parenchymatous cells of the liver and kidneys of rat embryos."

The American recommended occupational exposure limit (Threshold Limit Value) for H_2S is 10 ppmv average over an 8 hour work day, with short time concentrations not to exceed twice that value (ACGIH, 1971, p. 132-133). This value is based mostly on a number of reports of eye irritation occurring at concentrations between 10 and 20 ppmv, and one of conjuctivitis being caused by 20 ppmv (loc. cit.). The corresponding Soviet value is 6.6 ppmv (Vasilieva, 1973).

Table 9.3

Vasilieva's (1973) Comparison of the Rates of Menstrual Irregularities Among Three Groups of Female Rayon Workers

Shop	Menstruation of 5 or More Days (%)[1]	Irregular Menstruation (%)[1]	Unusually Heavy Menstruation (%)[1]	Dysmenorrhea[2]
Spinning (N=500)	17.8 ± 1.7	7.6 ± 1.1	12.5 ± 1.1	36.4 ± 2.1
Finishing (N=209)	10.5 ± 2.1	-	11 ± 2	38.2 ± 3.3
Spooling and Sorting (Control; N = 42)	5.1 ± 1.0	1.6 ± 0.6	2.3 ± 0.7	17 ± 1.8

[1]Reported distribution stated to be statistically reliable to $P < 0.001$.

[2]"Boleznennye mesyachnye" in original.

Table 9.4

Embryotoxic Effects of H_2S and CS_2 Exposure of Rats

From Bariliak, Vasilieva and Kalinovshaja (1975)

Group	Number of rats in group	Number Corpus luteum found in ovaries	Number of implantation sites	Preimplantation losses		Postimplantation losses		Total Embryo losses		Live births
				Number	%	Number	%	Number	%	
1	11	118	98	20	16.9 ± 3.6	39	39.8 ± 4.5	59	50.0 ± 4.6	59
2	13	129	99	30	23.2 ± 3.7	50	50.5 ± 5.0	80	62.0 ± 4.3	49
3	11	115	92	23	20.0 ± 3.7	22	23.9 ± 4.4	45	39.1 ± 4.5	70
4	12	123	110	13	10.6 ± 2.8	14	12.7 ± 3.1	27	21.9 ± 3.7	80
5	11	111	89	22	19.8 ± 3.8	17	19.1 ± 4.2	39	35.2 ± 4.5	72
6	26	258	246	12	4.7 ± 1.3	12	4.9 ± 1.4	27	9.3 ± 1.8	234

S9.4 Effects at 30 ppbv to 1 ppmv

The California State Department of Public Health has conducted several odor nuisance and health effect surveys in the rural pulp mill towns Eureka and Anderson, and the urban refinery towns Carson and Richmond (Goldsmith, 1973). In the two former communities the air pollution consisted mostly of H_2S and methyl mercaptan (CH_3SH) emitted from paper pulp mills, while in the latter two it consisted of H_2S, hydrocarbons and other refinery emissions plus ordinary urban smog.

The studies conducted in the first three towns consisted of personal interview surveys regarding the perception of odor, the subjects' responses to it, and the subjects' health. The responses from three different areas with different exposures to odor were compared to determine if the frequency of nuisance reactions and various medical complaints could be correlated with the degree of exposure to odor. In Anderson, a mail out questionnaire was also employed. The format of the Richmond study was rather different and because of this and the preliminary nature of the results, we will not discuss it further.

In each case, the concentration of odorous pollutants was determined by determining the dilution of air with clean air necessary for a panel of "trained noses" of known sensitivity not to be able to smell it. This is clearly the best measure of "odor" in the air, but makes it difficult to discuss the results in terms of the concentrations of specific air pollutants. However, some chemical measurements made in the dirtiest area studied in Eureka revealed an average concentration of about 23 ppbv H_2S and 12 ppbv CH_3SH (J.R. Goldsmith, private communication). The "odor"

measurement made in the dirtier portions of Anderson and Carson suggest pollutant levels considerably higher than this.

The overall conditions concerning health effects were (quoting the Introduction of Goldsmith, 1973):

> "In Eureka and Carson few significant differences in health effects were found related to differences in exposure by area. In Anderson a greater number of such differences occurred. Symptoms showing significant area differences in at least one study include constipation, dizziness, nausea, or vomiting; headache; runny nose; cough; sinus congestion; irritation of the nose; chest pain; and the MRC symptom of persistent cough and/or phlegm and shortness of breath...The greater frequency with which many symptoms were reported by women indicates the importance of adjusting for sex in the analysis.
>
> Symptoms showing a relationship to the amount by which the respondents were bothered by the odor regardless of the exposure area in which they live include the following: headache; dizziness, nausea, or vomiting; eye irritation; and burning or irritation of the nose."
>
> "We believe that there is suggestive evidence that health reactions above and beyond the annoyance reactions to odor are occurring, but the present studies have not been capable of elucidating these reactions. Although evidence is not convincing, we suggest that the most likely effects apart from annoyance due to community odor exposure are changes in ventilatory function of the lung, changes in secretions of the respiratory tract, changes in gastrointestinal function, the occurrence of gastrointestinal and respiratory symptoms and headaches."

In regard to Anderson alone:

> "For all subareas combined, significant area trends occur for the percent reporting the following symptoms frequently or occasionally: headache, among both men and women; nausea, men only; runny nose, both sexes combined; cough, men only. Corresponding trends occurred for percents who reported the following symptoms during the last two weeks: headache, both men and women; sinus congestion, both sexes combined; runny nose, both sexes combined and men; and cough, both sexes combined. No significant area trends were found for percents reporting symptoms only frequently (sic, infrequently?).

All cough and phlegm MRC symptoms show significant area trends for both sexes combined; phlegm grade 1 and 2, and persistent cough and phlegm show significant trends for men."

"Eight respondents attributed at least one symptom specifically to odor in the air; these included headache, insomnia, sinus congestion, eye irritation, burning or irritation of the nose, runny nose and cough. An additional seventeen respondents attributed at least one symptom to air pollution without specifically mentioning odor."

"Several symptoms show some suggestion of being related to exposure to pulp mill odor. These include headache, nausea, sinus congestion, runny nose, and cough for all subareas combined; and shortness of breath, irritation of the nose, cough and chest pains for rural subareas only. Significant area differences were also found for cough and phlegm as defined by the MRC questions. It should be noted, however, that some of these results are based on relatively small numbers of observations. Furthermore, the area differences could be related to some factor other than exposure."

In regard to Carson:

"Only one significant area trend was found in responses to the health questions to support the hypothesis that the exposure to odor is related to medical symptoms, as measured by the health questionnaire. This was for dizziness, nausea, or vomiting, which showed a significant relationship to exposure to odor in the percent who reported it frequently among those very much or moderately bothered by the odor. The results, however are based on small expected values. For all areas combined, significant relationships were found between the amount by which the respondent reported being bothered by the odor and the percents reporting certain symptoms frequently or occasionally. These were dizziness, nausea, or vomiting; eye irritation; and burning or irritation of the nose. Although these findings would support the hypothesis that the odorous pollutants are a causative factor in producing these symptoms, several other possibilities should be considered. The symptoms could be caused by other pollutants which may occur in a pattern similar to the odor, they could be caused by some unidentified third factor, or the same respondents may tend both to complain of the odor and to complain of their symptoms (reflecting a general tendency to verbalize or complain). In any event, statistically significant association alone is not proof of causation."

Miner (1969) summarizes a report concerning an air pollution episode which occurred in Indiana (USPHS, 1964):

> "In the Terre Haute, Ind. episodes in May and June 1964, hydrogen sulfide concentrations were sufficient to cause foul odor, resulting in 81 public complaints of discomfort and paint-blackening. Of the complaints, 40 referred to property damage, and 41 referred to health effects. The main symptoms reported were nausea, loss of sleep and abrupt awakening, shortness of breath, and headaches. However, almost none of those affected sought medical attention. The source of the hydrogen sulfide was a 36-acre lagoon used for biodegradation of industrial wastes. Hydrogen sulfide concentrations in the atmosphere during the episodes ranged between 34 and 450 μ/m^3." (34 and 450 μ/m^3 are equal to 22 and 300 ppbv, respectively.)

The IIEQ (1974) quotes a personal communication from Wm. C. Hoyle of the Division of Air Pollution Control, Illinois Environmental Protection Agency:

> "Alton, Illinois residents recently experienced an H_2S episode during the summer of 1973. Two hundred and sixty-six of the 458 citizen complaints to the Illinois Environmental Protection Agency concerned health effects, the latter being dyspnea and nausea."

The IIEQ also quotes another apparently unpublished study (Schieler, 1973) concerning the effects of chronic exposure:

> "A recent report from Seattle correlates the high incidence of mental depression on the West Coast with levels of H_2S air pollution. The preliminary study used suicide, divorce rates, and psychiatric admissions to hospitals as indicators of depression and found that the highest rates correlated with the highest hydrogen sulfide distribution. The exposure was chronic and the highest measured H_2S level was 0.12 mg/m^3. Other effects observed in this study included dizziness and blurred vision."

(0.12 mg/m^3 is about 80 ppbv. One should be cautious about drawing interpretations from unpublished reports as they have not been subjected to

peer review as to the validity and soundness of interpretation. We quote this one, however, because it appears to have affected the recommendation of the IIEQ).

Gurinov (1952) summarizes another study dealing with this concentration range (Levine's translation):

> "In 1947 - 1948 the scientific staff of the F.F. Erisman Sanitary Institute distributed question lists among the inhabitants of a village situated within a radius of 3.5 km from a petroleum processing plant. The information obtained indicated that 84% of the answers (over 700) were to the effect that the odor of H_2S was perceptible in the village; within a radius of 2 km the odor was sensed by 90 - 100% of the inhabitants. Results of several hundred analyses of the atmospheric air of the village showed the H_2S concentrations to range between tenths and hundredths of mg/m^3. Fifty-seven percent of the persons who sensed the odor complained of general debility, headaches, vertigo, nausea, and other subjective sensations. The nature of the complaints was identical with those which I.D. Mishenin regarded as characteristic of chronic H_2S poisoning; this author is of the opinion that the complaints were more plausibly associated with reflex manifestation. The important fact is that the low H_2S concentrations found in the air of villages situated in the vicinity of the petroleum processing plant evoked in the inhabitants a feeling of hygienic discomfort and, therefore, could not be accepted as permissible".

A tenth of a mg/m^3 is 66 ppbv. These reports nicely illustrate why very few places allow H_2S ambient air concentrations above about 100 ppbv.

S9.5 Effects of H_2S at ambient air concentrations below the California Ambient Air Quality Standard (30 ppbv)

The only epidemiological studies other than the pulp mill studies in California involving this range of concentrations which we have been able to find are those reported by Loginova (1957) which were conducted in the "Second Baku" petroleum area east of Kuibyshev:

> "...491 persons were studied by the question method. Of 310 persons residing in villages the air of which had an H_2S concentration below the limit of maximal single allowable concentration 73% stated that they sensed H_2S odor in the air; 33.5% complained of headaches, nausea, vertigo and associated such symptoms with the petroleum gas pollution of the air; residents reported occurrence of discoloration and corrosion of metallic objects which they believed was caused by the corrosive action of H_2S in the air. The answers indicated that under the atmospheric conditions created by the petroleum centers the presence of H_2S in the village air in concentrations within the allowable limits affected unfavorably the feeling of well-being and general living conditions of residents."

This narrative is particularly interesting in that the "maximal single allowable concentration" in force in the USSR at that time was 33 ppbv — almost exactly equal to the present day California standard of 30 ppbv! However, Loginova goes on to note that the probable presence of hydrocarbons and mercaptans may have also had an effect, and that dirty gas was used for heating in the area. The gas may well have leaked in quantities sufficient to raise indoor concentrations to well above ambient air concentrations.

These observations convinced her and her coworkers to proceed with a full blown epidemiological study comparing the morbidity of people in the city of Buguruslan who lived in gas equipped dwellings with that of people who did not. The rationale for this comparison was that the available gas contained about 0.8% H_2S and sufficient moisture to make it highly corrosive. Thus, the gas heated dwellings were polluted by H_2S leaking from the corroded pipes and primitive ovens. 359 air samples from 120 gas equipped dwellings were analyzed:

> "The H_2S content in 73.8% of the air samples was 0.013 — 0.030 mg/m^3; it exceeded the limit of single allowable concentration in only 16%; despite that, the occupants of the living quarters complained of ill-feeling which they

associated with indoor air pollution with the gas. Headaches constituted the dominant complaint which occurred mostly in the morning; among the frequent complaints were also nausea, loss of appetite, easy fatigability, impairment of vision. Occupants of residences the air of which contained 0.010 – 0.013 mg/m^3 of H_2S did not complain of headaches. Occupants of residences the air of which contained 0.05 mg/m^3 of H_2S or over complained of one or more of the following symptoms: most frequently headaches. general weakness, nausea, easy fatigability, disturbance of vision, etc."

(0.013 mg/m^3 = 8.5 ppbv; 0.050 mg/m^3 = 33 ppbv.)

The results of examining the medical histories for 1948 of 7,000 people from two sections of the city which differed only in that one was supplied with gas and the other was not are presented in Tables 9.5 and 9.6. Loginova summarizes the data in Table 9.6 (and also some data from 1947 which were not presented).

"...The number of cases with infectious diseases per 1,000 of the undifferentiated residents in the gas-equipped section in 1947 exceeded that of the control section by 40% in 1947 and by 84% in 1948. Cardio-vascular disturbances were generally higher in most age groups of the gas-equipped section. Nosologically 40-50% of all cases were diagnosed as myocardial dystrophy, myocarditis and myocardial sclerosis. Among the chronic cases with gastro-intestinal disturbances the most frequently occurring were peritonitis, typhlitis, appendicitis, liver and gall bladder diseases; chronic gastritis and enteritis occurred most frequently among those grouped under the general diagnosis of chronic gastro-enteritis; gastric ulcers were excluded. The initial hospital visits per 1,000 of this group in the gas-equipped section exceeded those in the control section by 91% in 1947 and by 78% in 1948; more than 50% of them were diagnosed as chronic gastritis and chronic colitis.

"There were twice as many cases of gastric and duodenal ulcers among the residents of the gas-equipped as in the control section in 1947 and 1 3/4 times as many in 1948.

"Nervous diseases among the residents of the gas-equipped section occurred three times as frequently as among residents of the control section in 1947 and twice as frequently in 1948. The condition of 50% of the sick was diagnosed as neuropathy, 35% as neuralgia and neuritis, and the rest as ischia, reactive

hysteria, vegetative neurosis, etc. The diagnosis of neuropathy was made on the basis of complaints of headaches, vertigo, nausea, easy fatigability, impairment of vision, etc; in some cases the examining neurologist recorded the complaints without arriving at a diagnosis.

"The number of cases with female ailments in the gas-equipped section exceeded the cases in the control section by 60% in 1947 and by 68% in 1948 per 100 of those 18 years or older."

These observations of Loginova's make grim reading; however, she herself recognizes that the hydrocarbon and other components of the leaking gas may have contributed to the morbidity in the gas equipped section. To this we add that the "primitively constructed brick ovens" of which she speaks sound like they may well have released considerable amounts of combustion products like SO_2 and CO into the air in the dwellings. There may also have been other conditions which differed between the two areas. All in all, Loginova's results are not convincing in regard to their relevance to the effects of H_2S alone. We quote them as fully as we do because apparently, the Soviet authorities accepted them as being relevant and useful.

Duan (1959) studied the effects of small concentrations of H_2S upon the light sensitivity of the eyes of three human subjects via the "adaptometric method". This method is described in detail by Ryazanov, Bushtueva and Novikov (1957), and by Ryazanov (1962). Briefly, the subject is exposed to the given gas at given concentration throughout the experiment. First he or she stares at an illuminated milky ball for three minutes. The ball is then removed and replaced by a dim red point of light. While the subject keeps his eyes fixed on the red point, his peripheral vision light sensitivity is determined by gradually increasing the brightness of another white disk off to the side of the apparatus until the subject is able to see it. This light sensi-

Table 9-5

Number of sick per 1000 in 1948 in the gas-equipped and control sections of the city

Age Group	(A) Gas-equipped section	(B) Control section	Percent ratio (A/B) -100
Children up to 14 yrs.	504	530	- 5.0
Adults	916	528	+73.0
Total	803	529	+52.0

Reproduced from Loginova (1957)

Table 9.6

Morbidity Among Buguruslan Residents per 1000 of Given Age Groups

Nature of sickness	Gas-Equipped section							Control Section						
	Up to 3 yrs	4-7 yrs	8-14 yrs	15-19 yrs	20-49 yrs	50-59 yrs	60 yrs and older	Up to 3 yrs	4-7 yrs	8-14 yrs	15-19 yrs	20-49 yrs	50-59 yrs	60 yrs and older
Infectious	327	349	223	57	332	57	48	262	343	266	88	197	44	31
Cardiovascular	9	8	5	5	139	59	132	4	6	3	6	66	50	92
Digestive	15	15	16	17	185	65	74	19	13	30	12	125	15	77
Neurological	6	8	6	11	119	33	23	-	-	3	13	52	35	20
Female	-	-	-	-	265	17	7	-	-	-	-	172	16	14
Respiratory	150	100	33	8	135	48	51	100	143	113	27	86	43	60

Reproduced from Loginova (1957)

tivity test is repeated at intervals of first five and then ten minutes for an hour thereby generating a curve of light sensitivity against time. This whole procedure is repeated several times and resulting curves are averaged.

Duan found that H_2S concentrations of 6.6 and 8.6 ppbv caused the adaptation curves to change, while the 5.3 ppbv curves did not differ significantly from the clean air curves. His paper contains the actual curves, and, indeed, the changes observed at the higher two concentrations are quite obvious and qualitatively consistent among all three subjects. The change in the 6.6 ppbv curve presented by Duan seems to be the lowest concentration H_2S effect upon humans ever reported other than the perception of its smell.

S9.6 Odor perception threshold

Fourteen determinations (and estimates) of the minimum concentrations of H_2S at which its odor is perceived are presented in Table 9.7. As we will discuss below, these various determinations may not be strictly comparable since they were made in various different ways. However, the more-or-less steady drop with time is obvious, and we suspect that this is at least in part due to improvements in experimental technique. This is quite plausible, as odor threshold experiments are difficult to do properly. (The difficulty is indirectly evidenced by the great care and complex experimental design that Wilby (1969) and Leonardis, et al., (1969) apparently considered necessary to produce reliable results. Also see the discussions of technique in Karolinska Institute (1970).)

We feel that the most trustworthy determinations are those by Wilby (1969) and the higher of the two values reported by Leonardis, et al., (1969). We believe this because 1) these authors appear to have paid the closest attention to experimental detail 2) these determinations are among the most recent and 3) they are in excellent agreement despite the very different subjects and experimental procedures employed: Wilby simply took 33 of his fellow employees at the Southern California Gas Company up to the roof and reported an average threshold value while Leonardis, et al., worked with a panel of four highly trained and experienced odor chemists in a special testing facility and reported the concentration at which all four agreed that they could detect and recognize the odor of H_2S. We have somewhat less confidence in the lower value reported by Leonardis, et al. As noted by these authors, the reason for the discrepancy between the two results is probably due to the contamination of the hydrogen sulfide from one or both of the sources which they used by other, even more malodorous compounds in trace concentrations. (See S9.8.) We feel that it is more plausible that a trace contaminant adds (or intensifies) an odor rather than that it weakens it.

Another thing evident in Table 9.7 is the considerable spread between the highest and lowest threshold determined among their groups of test subjects by some of the authors. The importance of this observation cannot be overemphasized; a concentration which one person doesn't notice may be readily perceived by others. It also appears that a given person's threshold concentration may change from occasion to occasion above and beyond the obvious effects of olfactory fatigue and possible masking odors. The threshold

data presented by Wilby (1969) for his 33 subjects is based on the average of three "tests" for each one. He found that, on the average, the ratio of the highest of the three thresholds determined for each subject to the lowest is 3.29. Thus, if he had reported the distribution of results for all 99 of the tests included in his statistics rather than that of their averages for each of the 33 subjects, the spread between minimum and maximum would probably have been even greater.

Unfortunately, the difficulties of studying odor thresholds are by no means limited to questions of technique and physiological variation. Even more difficult to answer are questions relating to the definition of "odor" and to the practical significance of the results. These matters are discussed at length in Karolinska Institute (1970), Kendall and Lindvall (1971), and Goldsmith (1973).

First of all, there is the subtle but important distinction between asking someone if he smells <u>an</u> odor or <u>the</u> odor of H_2S. This distinction is particularly important in the case of H_2S because its odor at very low concentrations (approaching the given individual's olfactory threshold) is generally perceived as being musty or swampy rather than as that of rotten eggs, which is perceived at higher concentrations (Pomeroy and Cruse, 1969). Indeed, H_2S is the main component of not only the odors of rotten eggs and geothermal plants, but also those of swamps, musty water, sewage treatment plants and oil refineries! It is clear that a test subject who expects to smell "rotten eggs" may well mistake the musty odor of low concentrations of hydrogen sulfide for nothing more than the background odor of the room unless he is

forewarned. However, a subject may easily be trained to recognize low concentrations of H_2S (Leonardis, et al., 1969).

Second, there is the question of bias on the part of the experimenter. For example, if the experimenter expects a result of 30 ppbv, the subject reports smelling H_2S at 5 ppbv, and the experimenter doubts or questions the result, the subject will be rather less likely to "be able to smell it" at 5 ppbv the second time around. We suspect that this factor may be quite important in explaining why the drop of reported thresholds with time has been so slow and smooth.

Third, there is the simple fact that whether or not you expect or even want to smell it can have a major effect on whether you do. Kendall and Lindvall (1971) expand on this;

> "The most important consideration might be the interaction of learning or experience and odor perception. Psychologists have repeatedly stressed the extent to which prior bias, either for or against an alleged odor source, can influence the emotional reponse to an odor dosage. Thus any other aesthetic insult from the source, whether in the form of visible emissions, noise, vibration, or glare, or even such non-specific factors as disorderliness or distasteful plant architecture, may largely negate any potential decrease in community annoyance from reduction in odorant dosage, however, achieved."

Fourth, everyone is familiar with how easy it is to get used to an odor to the point of not noticing it any more. This is particularly to be expected in the case of H_2S, whose specific effect on the sense of smell is well known (see S9.2).

Finally, it is not at all certain that the smell of the Geysers is due to H_2S alone. We will return to this possibility in S9.8.

Table 9.7

Various Reported H_2S Odor Thresholds
(ppbv)

Single value reported or average	Minimum	Maximum	Standard Deviation	Number of Subject	Reference
4.5	1	20	2.9	33	Wilby (1969)[1]
4.7				4	Leonardis, et al. (1969)[2,4]
0.47				4	Ibid.[3,4]
	≤3	≤30		5	Pomeroy and Cruse (1969)[5]
10					Larsen (1966)
	6	30			Adams and Young (1965)
29	12	69	5	16	CSDPH (1962)[6]
10	8	20	2.6	12	Duan Fen-Djuy (1959)[6]
26	20	33		11	Loginova (1957)
	6	33			Ibid.[8]
∿70					Libster (1952)
	∿7				Loginova (1952)[8]
25					Patty (1949)
130					Katz and Talbert (1939)

[1] Type of average and standard deviation computed not specified, but seem likely to be arithmetic.

[2] H_2S from reacting Na_2S with acid.

[3] H_2S from commercially supplied cylinder. Leonardis, et al., believe that the disagreement between the results of the two determinations using the two gas sources are probably due to the effects of trace contaminants.

[4] Values reported are minimum concentrations at which all four members of a panel of odor chemists agreed that they could smell the gas.

[5] Subjects smelled water containing a known concentration of dissolved H_2S. Air concentrations related to water concentrations via Henry's law. $\leq$ sign allows for effect of probable dilution with clean air.

[6] Geometric average and standard deviation.

[7] Geometric average and standard deviation calculated by present authors from "minimum detectable" data for all 12 subjects presented by Duan.

[8] Estimated in field by correlating public complaints with measured concentrations. May also be unreliable because of possible presence of other sulfur compounds.

S9.7 H_2S Air Quality Standards

Selected H_2S air quality standards of various jurisdictions are presented in Table 9.8.

First of all, it must be understood what an air quality standard is and what it isn't. The 30 ppbv (1 hour average) H_2S Ambient Air Quality Standard (AAQS) presently in force in California does not mean that the law has been violated if the one hour average H_2S concentration at some point not on the polluter's property exceeds 30 ppbv. What it means is that each Air Pollution Control District in the state should strive, in its regulations, policy and practice, to insure that a 30 ppbv one hour average is never exceeded except, perhaps, on the same parcel of property as is the source of pollution. The USSR AAQS is also considered, in practice, to be a goal to strive for rather than a law (Ryazanov, 1962).

Second, note the different "Averaging times" indicated in the table. The very simplest choice here is "Instantaneous," which simply means that if the needle is ever seen to go beyond X ppbv, the standard has been exceeded. Because of the difficulty of making very rapid measurements, a much more common choice is 1 hour, which means that the standard is being adhered to if the average concentration determined for any hour long period chosen never exceeds X ppbv. However, the concentration may go much higher for shorter periods without exceeding the standard; for example, 100 ppbv for 12 minutes and 10 ppbv for the rest of the hour would (just barely) be within the California AAQS. For this reason, X ppbv instantaneous is a much tougher standard than is X ppbv 1 hour average. Likewise, X pbbv 1 hour average is tougher than, say X ppbv 8 hour average. This must be remembered when comparing the various standards.

It is somewhat difficult to compare the Soviet standards with the American ones because the former are specifically for application in humanly inhabited areas only, while most or all of the latter apply to any point beyond the property line of the polluter. However, industry spokesmen have repeatedly asked that the California standard be applied only to the inhabited areas near the Geysers and, indeed, this is how the standard has been enforced in practice. This interpretation makes it possible to compare the two standards and it is obvious that the Soviet standard is much tougher – so tough, in fact, that the Geysers development would at this time be deemed "Impermissible" under the Soviet standard on account of the situation in the Cobb Valley.

The two occupational exposure standards are roughly 1,000 times higher than the various ambient air standards. This is because industrial exposure is limited to a few more or less healthy people and to 40 hours a week. Also, the hazards are reasonably well known and means for protecting exposed workers exist and are used.

It is interesting to compare how some of these standards were arrived at. The current (1962) California standard is squarely based upon the determination of the odor perception threshold by the CSDPH (1962). They found the geometric average of the measured thresholds to be 29 ppbv, and simply decided to round this off to 30 ppbv and make it the standard. The toxicological review of the CSDPH is almost completely limited to the well known high level effects. If the same criterion of setting the standard were applied using the more recent determinations of Wilby (1969) and Leonardis, et al., (1969) the California standard would also be about 5 ppbv.

The Illinois standard is based on a more thorough review (IIEQ, 1974). This review also suffers from being devoted mostly to the higher concentration ranges, but at least the 30 ppbv to 1 ppbv range is covered well. Unfortunately, the only Soviet paper these reviewers cite is Glebova (1949) which we really consider to be more misleading than useful in regards to the below 30 ppbv range. All in all, the IIEQ simply decided that 10 ppbv was sufficiently below the concentrations discussed by Glebova (1949) and Schieler (1973) to offer an adequate margin of safety.

The 1952 Soviet standards were determined in essentially the same way as the 1967 California one. Gurinov (1952) reviewed the available occupational toxicology literature, considered the H_2S nuisance situation in a village near a refinery, conducted some odor threshold experiments and decided that 33 ppbv (instantaneous) offered an adequate margin of safety. Surprisingly, Gurinov seemed unaware of Glebova's report and of some of the epidemiological studies reported by Loginova (1957) which appear to be at least partially based on work done during the 1940's. It is not very surprising that he recommended almost the same standard as is in force in California today.

The 1957 Soviet standards were based on Loginova's (1957) recommendations. Because Loginova strongly suspected that the increased morbidity she found among users of dirty gas was at least partly due to various non-H_2S constituents of the gas, she recommended tight standards for H_2S in the presence of other gas and oil components. The standards for H_2S from other sources which she recommended were twice as high; i.e., tighter by only a third than the 1952 standards had been.

The 1959 Soviet standard was recommended by Duan on the basis of his "adaptometric" experiments. He recommended 5.3 ppbv for the new standard because at this concentration he had observed no effect upon the adaptometer curves of his subjects.

More important than the historical and scholastic details of the setting of the AAQS's discussed above are the underlying assumptions, attitudes, and goals that entered into the process. The Soviet approach to determining AAQS's (as explained by Ryazanov, 1962) is an extreme one which is explicitly intended to err in the direction of lower and, thereby, safer "Maximum Permissible Values" even if these should prove impractical and unenforceable. (The idea in that case is to set a goal for industry to strive for, rather than proposing a "reasonable" standard and, thereby, taking the pressure to clean up off of industry.) The basic principle employed is a theoretical one: that any environmental factor which is capable of eliciting a reflex in the human body is potentially harmful and should not be allowed. That reflex may be some measurable physiological change (as in Duan's studies) or a perception of odor. (Extensive Soviet research on the threshold concentrations for eliciting various physiological effects has shown that, for many substances, the threshold concentrations for causing various different effects are roughly the same. The minimum odor thresholds for many substances are apparently also roughly comparable to the various physiological thresholds.) Complaints from the public are also considered evidence of a "harmful stimulus". These principles are concisely stated and justified in two quotes from Professor Ryazanov:

"The organoleptic evaluation of atmospheric pollutants should be regarded as of special significance. Complaints of populations against unpleasant odors emanating from a production plant should not be regarded lightly. They should be given due consideration. In the light of Pablovian principles of physiology slight irritants should be regarded as substantial environmental factors affecting the functional state of the cerebral cortex and through it the entire organism."

- Ryazanov, (1952b)

"The substances which strongly affect our olfactory senses are, in general, the substances whose threshold for odors is based on reflex action. The levels affecting strictly the sensory reflexes are lower than those that are toxic – that is damaging to health. For those substances without odor, or with very weak odor, the threshold for the toxic effects is lower than the threshold affecting the respiratory reflexes. But the more we work in this area, the more we find that the threshold for toxic effects is considerably lower than the figures we have now. That is, the centers must respond to lower concentrations than we have thought heretofore. I believe that with the finer methods of study and continued work we will find that the toxic doses we now think are safe are too large. They will have to be much smaller."

-In response to a question following the oral presentation of his 1962 paper.

American epidemiologists generally do not accept this conservative approach and try to base their recommendations on data concerning concrete health effects. This, for example, is was what the IIEQ did (though not very well) in recommending a standard which is apparently mostly based on the rather incompletely convincing results of Glebova and Schieler.

An intermediate approach was taken by the CSDPH which recognized nuisance potential as a valid basis for setting the California AAQS. Since that time the CSDPH group has made a serious attempt to tie together odor threshold, nuisance threshold, and health effects in their pulp mill and refinery town studies (S9.4). It seems clear that it is through studies of this sort that the apparent contradiction between the Soviet and American approaches will be reconciled (if it ever is).

Table 9.8

Ambient Air Quality Standards:

Value(ppbv)	Averaging Time	Jurisdiction	Reference
30	1 hour	California	CSDPH (1962)*, CARB (1970)
5	24 hours	Pennsylvania	Stern (1968b)
100	1 hour	Pennsylvania	Ibid.
10	8 hours	Illinois	IIEQ (1974)*
5.3	Instantaneous	USSR[2]	Duan (1959)*
20	Instantaneous	USSR[2]	Ryazanov (1957b)*
(10)	Instantaneous	USSR[2,1]	Ibid.
33	Instantaneous	USSR[2]	Ryazanov (1952b)*
5.3	24 hours	USSR[2]	Duan (1959)*
6.6	24 hours	USSR[2]	Ryazanov (1957b)*
(3.3)	24 hours	USSR[2,1]	Ibid.
10	24 hours	USSR[2]	Ryazanov (1952b)*

Occupational Maximum Permissible (Instantaneous):

10 ppmv	USA	ACGIH (1975)
6.6 ppmv	USSR	Vasilieva (1973)

* Indicates that reference cited is report upon which the standard quoted was based

[1]"When in combination with petroleum gas"

[2]"Permissible Maximum in Inhabited Areas"

Unfortunately, it seems clear that the California AAQS has, at least in the Cobb Valley, failed to achieve its explicitly stated purpose of preventing an H_2S odor nuisance from occurring. To be sure, many people in the Cobb Valley can well be expected to have atypically low "nuisance thresholds" for the simple reason that they moved to Lake County precisely to get away from air pollution and other unpleasant aspects of urban life. However, we cannot see any reason why their definition of nuisance should be valued any the less merely because it is stricter than most. The fact is that many of them do smell it and do complain about it. We are happy to report that the California AAQS for H_2S is presently being reviewed.

S9.8 Possible other odorous emissions

As previously noted, the quality of the available steam composition data is such that presently unknown air pollutants might actually be emitted either now or in the future. The most likely presently unknown compounds which might prove to be practically important are the various organic sulfur compounds which typically accompany H_2S emissions from other sources. As it happens, some of these compounds are even more malodorous than H_2S. The odor threshold values that Wilby (1969) and Leonardis, et al., (1969) have reported for some of them are given in Table 9.9. (These values were determined by exactly the same methods as the H_2S values given by these authors and, therefore, may be compared with the H_2S values.) The mercaptans are clearly much stronger smelling than H_2S, and it is clear that if the steam should contain even a few ppmv of them, they could significantly contribute to the overall odor nuisance. Since these various compounds don't smell very different

from H_2S (they are what gives gas delivered to homes its smell), a mixture of them with H_2S could (and most probably would) be mistaken for H_2S alone by someone expecting to smell H_2S alone. Carbon disulfide (CS_2), on the other hand, has a considerably weaker odor than H_2S. Carbonyl sulfide (OCS), which could conceivably also be present (but is not included in the table) is likewise much less smelly (Braker and Mossman, 1971, p.115).

The toxicity of mixtures of CS_2 with H_2S has already been more or less adequately covered in the preceeding Sections. Another brief discussion of CS_2 alone and more references are given in ACGIH (1971, pp. 40-41). Relatively little is known about the health effects of the other gases. The brief discussions of methyl mercaptan and ethyl mercaptan given by ACGIH (1971, pp.167-68 and 197, respectively) compare their high level effects to those of H_2S, but state that (on a volume basis) these gases are somewhat less toxic than H_2S. Braker and Mossman say essentially the same thing about OCS (pp.115-118). They also discuss methyl mercaptan (pp. 378-380), but say little about its toxicity. Note, however, that, despite their toxicity apparently being no greater than that of H_2S, the (industrial) Threshold Limit Values for methyl mercaptan and ethyl mercaptan are 20 times lower than that for H_2S (0.5 ppmv vs. 10 ppmv; ACGIH, 1975) on account of their extraordinarily powerful smell (ACGIH, 1971).

All in all, we doubt that emissions of these compounds in the amounts which seem plausible (i.e, smaller than the amounts of H_2S) could have any health or nuisance effects significantly different from those of the emitted H_2S alone, though they could contribute somewhat to the latter.

Table 9.9

Odor Thresholds for Various Reduced Sulfur Compounds
(ppbv)

	From Wilby (1969)			From Leonardis, et al., (1969)
Compound	Average	Minimum[1]	Maximum[1]	Value Reported
Methyl Mercaptan	0.99	0.2	3	2.1
Ethyl mercaptan	0.40	0.1	1.5	1
i-Propyl mercaptan	0.45	0.04	1.5	
n-Propyl mercaptan	0.75	0.1	5	
n-Butyl mercaptan	0.72	0.1	3	
Dimethyl sulfide	2.5	0.2	8	1
Diethyl sulfide	5.9	1.3	20	
Hydrogen sulfide	4.5	1	20	0.47,4.7
Carbon disulfide				210

[1]Approximate values read from graph.

CHAPTER TEN - OTHER EMISSIONS

S10.1 Water Quality and Condensate Spills

The results of extensive programs of water quality monitoring in Big Sulphur Creek and its tributaries have recently been reported by Le Gore, et al., (1975) (the "Parametrix report"), Price and Griffin (1975), and Kubicek and Price (1976). The major results of these three studies are well substantiated and the same: the major water quality impacts of the Geysers development seem to be those due to occasional massive releases of silt and power plant water. This is reasonable, as there are no routine water emissions other than a little bit of "domestic" water runoff. The only form of water quality degradation found to be chronic was the gradual increase in turbidity, color and settleable solids over the period May 1968 to May 1974 reported by Price and Griffin (1975). This average increase in muddiness is the consequence of the inevitable erosion due to the clearing and steepening of the soil and general construction activity. (Which is not to say that it couldn't be reduced; some cuts along those roads seem to have been made with great abandon!)

On the other hand, the 7 kilometer portion of Big Sulphur Creek just below the Geysers appears to be largely devoid of fish during the summer when the flow rate drops to about 14 liters/sec. This is apparently due to the high concentrations of ammonia and nitrate and high water temperature in this stretch. The source of the ammonia has been fairly convincingly demonstrated to be the natural geothermal emissions from the various hot springs and fumaroles in the Geysers area. Price and Griffin (1975) have actually found a small but statistically significant decrease in temperature, ammonia, sulfate and boron concentrations since 1968. This is most likely due to weakening

of the natural geothermal activity by development. Le Gore, et al., (1975) have demonstrated that most of the ammonia and a large fraction of the nitrite and excess heat along this stretch are due to inflows from several hot spring and fumarole fed tributaries. Nitrite is an oxidation product of ammonia and geothermal heat releases aggravate solar heating during the summer-time low flow period. In other words, natural geothermal activity has thoroughly poisoned that stretch without much help from the development. PG&E has embarked on an ambitious program of recording the present state of the streams over a wide area surrounding the Geysers in order to be better able to distinguish natural pollution from industrial in the future (cf. Price and Kubicek, 1975 and 1976).

The only significant water pollution causes appear to be siltation, spills of drilling related fluids, and spills of condensate from the power plants. Several typical (partial) analyses of plant condensate are presented in Table 10.1. This condensate should not be confused with that collected from the wellhead or pipeline steam flows because it is the product of steady state cycling in the power plant. Comparison with the "Average" steam composition in Table 8 demonstrates the effects of this cycling. The concentrations of boron and arsenic in the plant condensate are generally much higher than in the steam. The reason is that the stable compounds of these elements are not at all volatile at ordinary temperatures, and they accumulate in the cooling water circuit until disposal by reinjection matches inflow with steam. Some of the incoming mercury is released to the atmosphere as the free metal, and the rest of it probably ends up in the cooling tower sludge rather than accumulating in the water. The various other metals.

reported in the condensate are most probably there from the scrubbing of dust from the air by the cooling towers and the slow corrosion of the various metal surfaces exposed to the cooling water flows. Sulfate is derived from the natural oxidation of H_2S.

The most worrisome substances reported in these analyses are boron and ammonia. Such concentrations of boron in soil or irrigating water would quickly kill most plants. In practice, this means that soil soaked by a condensate spill is rendered incapable of supporting plant life until thoroughly leached by rain and runoff. Fortunately, boron at these concentrations seems harmless to fishlife, but the ammonia most certainly is not. The arsenic concentration is also murderously high, but the slow acting, cumulative nature of this metal's toxicity means that it probably wouldn't have time to take effect before dilution reduced the concentration to safe levels. Le Gore, et al., made a bioassay of the toxicity of the condensate from Units 5 and 6 to fish using fish (roach) caught in Big Sulphur Creek. The condensate was diluted with water from Big Sulphur Creek in various ratios, and 20 fish were used per tank. At concentrations of 45% and higher all of the fish died within 1 hour. At 30%, 11 died within 1 hour and all within 4. At 15%, five died within 2 hours and all within 14. A second set of bioassays was conducted to more closely assay the toxicity at lower concentrations. It was found that 12% condensate killed 6 fish within 1 hour, 18 within 8 hours and all within 24 hours. 8% condensate killed one fish within 8 hours and 13 within 60 hours. 4% condensate didn't kill any fish at all within 96 hours. In practice, this means that a spill of 22 tonnes of this condensate reaching the Creek at its low flow (14 liters/second = 50.4 tonnes/hour)

within 1 hour would kill about half the fish (of this species) for some distance down stream. Larger releases and/or longer durations would make matters worse, while higher stream flows would reduce or eliminate the danger by diluting the condensate further.

Lollock (1975) has reported seven condensate spills at the Geysers in the period May 1974 to September 1975 of which the California Department of Fish and Game was aware; it seems likely that there were other spills of which they were not aware. The volumes of six of these spills were estimated as ranging between about 11 to 740 tonnes. To be sure, not all and maybe only a small part of each such spill actually reached Big Sulphur Creek, and condensate contributed by spills which occured during winter and spring was probably immediately diluted to well below toxic levels. However, it is clear that the potential for a major fish-kill from a summertime spill exists.

Actually, matters seem to be rather more complicated than this. Le Gore, et al., have presented detailed discussions of two spills of condenate from Units 5 and 6 which occurred while they were working at the Geysers. The first occurred on 9/9/74 and released about 17 tonnes of condensate. It killed an estimated 5,000 fish in a 460 meter stretch of Big Sulphur Creek. The second spill, which released about 170 tonnes of condensate on 9/15/74 didn't seem to kill any fish at all. Estimates based on the condensate and stream flow volumes and the results of the bioassays indicated that just the opposite should have occurred – the first, smaller spill should have been harmless, and the second one should have killed fish. An explanation of the second spill's harmlessness was easy to come by: before reaching a tributary of Big Sulphur Creek the condensate flowed some distance over

dry ground, and much of it probably soaked into the ground before it reached the water.

The explanation of the extreme lethality of the first spill was not so simple, but proved well worth working out. This spill took a different route to the Creek: via a tributary the Parametrix group designated as "F". "F" is an unusual little spring-fed stream. Its water has a pH of about 3 (as compared to the pH 8 typical of Big Sulphur Creek and its other tributaries) and it runs through an area of fumaroles and geothermal alteration on its way to Big Sulphur Creek. Upon investigation it was found that the soil adjacent to "F" in this area contained so much sulfuric acid (from the oxidation of H_2S) that mixing samples of it with water gave pH's well below 2. These observations plus the well known phenomenon of mercury accumulation around hot springs suggested an explanation: rather than killing the fish itself, the spilled condensate picked up a lethal dose of mercury and, perhaps, other toxic substances from the soil in the fumarole area near "F" and delivered it to the Creek. This interpretation is strongly supported by the observation that the condensate was extremely turbid when it entered the Creek, and that the Creek itself was rendered turbid for at least 2.5 km downstream by the spill. An analysis of the sediment deposited on the stream bed by the condensate flow just downstream from "F" revealed an astoundingly high 1.5% mercury and 0.21% arsenic. The injection of this highly toxic material into the Creek by the condensate spill seems to explain the fish kill quite well.

All of these observations are nicely tied together by one scientific fact: the solubility of mercuric sulfide (and other heavy metal sulfides) depends strongly on pH. Below about pH 7, the solubility increases by about

a factor of 100 per each drop of one pH unit. The following overall mechanism suggests itself: highly acid water (pH 1 or 2) seeps through the soil of the fumarole area and carries mercury to F. When it reaches F, its pH rises to about 3 and much of the mercury precipitates out as mercuric sulfide. That portion of the mercury which reaches the Creek is immediately precipitated out by the much higher pH's prevailing there and accumulates just downstream of F. When the spill occurred, the flood of condensate washed additional mercury (and arsenic) from the fumarolic ground into F, picked up the mercury-rich sediments from the bottom of F, and delivered the whole mess to the Creek. Also, the condensate may have picked up enough sulfuric acid from the soil to enable it to dissolve some of the mercuric sulfide, thereby ultimately converting it to a very fine and biologically available hydrosol a bit farther down the Creek. The presumed mercury deposit on the bottom of the Creek near F's infall is probably also stirred up and partially dissolved.

This story nicely illustrates how industrial activity can aggravate natural pollution. Also, remember that the condensate spill killed the fish because it was a spill rather than because it was condensate; a 17 tonne spill of clean water would have had essentially the same effect.

S10.2 Emissions of dust and debris

These emissions are difficult to quantify, but are clearly significant. Heavy earthmoving activities greatly increase siltation and stir up some dust. Well drilling has the potential to produce a large amount of dust. This emission appears to be largely controllable by the injection of water into the Blooie line through which spent drilling air and drilling chips

Table 10.1

Typical Plant Condensate Analyses from the Geysers

Source*	1	2	3	4	5
Units No.		1&2	4	10	5&6
Date Sampled		5/74	6/12/74	6/12/74	9/14/74
pH		7.7	6.66	5.16	7.50
Major Constituents in ppmw:					
Sulfate		216	7.0	6.0	120
Boron	129	197			236
Ammonia as N		74	224	13	115.0
Nitrate as N		0.3			0.95
Nitrite as N					0.012
Silica		2.6			
Minor Constituents in ppbw:					
Mercury	3.7		0.22	0.05	0.24
Arsenic	59		5.9	102	315.0
Copper			0.2	0.2	5.9
Zinc			0.01	0.01	
Cadmium			4.4	0.04	0.02
Lead			2.0	16.0	8.5
Selenium			0.4	0.6	
Chromium					1.9

*Notes to Table 10.1

[1]"Average concentrations in cooling water" used by Griffin, et al., (1974) to calculate cooling tower drift emissions.

[2]Most recent of four analyses of Units 1 and 2 cooling tower overflow presented by Dodd, et al., (1975).

[3]Unit 4 condensate analysis presented by Le Gore, et al., (1975) in their Table 19. Point in plant cycle that the sample was taken from is not specified, but low pH strongly suggests condenser hotwell or the pipeline between it and the cooling tower.

[4]Unit 10 condensate from the same source as above.

[5]"Units 5 and 6 Settling Pond." From Table 21 of Le Gore, et al., (1975).

Some components and parameters have been dropped from several of the analyses in the interest of brevity. CO_2 and H_2S are not reported because these gases are to a large degree lost during collection and analysis. Some bicarbonate is, however, probably present.

are ejected. Neilson et al., (1976, p. V-14) quote the NSCAPCD to the effect that the drilling dust emission rate varies from 0.09 to 195 kg/hour/well depending on the material drilled through and the amount of water injected. It is particularly desirable that this emission be abated when drilling through serpentine on account of the possible presence of chrysotile asbestos in this rock. A considerable amount of dust is probably thrown into the air during the initial cleanout of a newly drilled well.

Some dust is also brought up by the steam during normal operations. Serpa and Lorenz (1974) present figures regarding the volume and composition of the sludge which accumulates in the cooling tower basins which suggest a maximum dust content of about 25 ppmw in the steam delivered to the power plants. (This figure is a maximum estimate because it probably includes some dust scrubbed from the ambient air by the cooling towers.) 25 ppmw in the steam translates into about 0.03 g/kWh dust emissions from preplant steam releases. (Almost all of the dust that actually goes to the plants probably ends up in the cooling tower sludge.) These emissions probably consist of quite ordinary rock dust and seem to be too small to really worry about.

The emissions associated with well blowouts and similar misfortunes are rare but can be serious. The blowout of GDC 65-28 on 31 March 1975 created an oblong crater measuring about 30 x 37 meters and about 7 meters deep (Bacon, 1975). This means that on the order of 6,000 tonnes of material was thrown into the air. Most of this material was coarse enough to immediately fall back down to the ground, much to the detriment of the vegetation surrounding the site and of the fish in the Creek below. Probably not very much remained airborne, but even a small fraction of 6,000 tonnes constitutes

a large injection of dust into the atmosphere. Potentially compounding the impact was the fact that the rock in which the casing failure occurred was serpentine, which is known to often contain a large fraction of asbestos fibers. Fortunately, this particular serpentine body had been metamorphosed and, for that reason, probably contained little or no asbestos. Also, the amount of serpentine blown out of the hole was probably small, as the crater itself was in superficial alluvium. However, the potential for a major blowout involving asbestos occurring in the future is clear.

Neilson, et al., (1976, p. V-73) describe another sort of episode: "Severe local impacts have been experienced at Shell's U.S. Geothermal One Well #1 where unusual drilling problems were encountered. A fine colloidal sand was expelled with the steam which tended to clog well flow during testing. These sands were not filtered out by normal abatement procedures. The sands settled over an area of approximately 1.2 km in diameter around the well, covering the surrounding vegetation, soil, and rocks with a white deposit up to 15 mm thick (especially within 0.6 km of the well). The deposit hardened into a heavy slick crust during the summer months which increased runoff and substantially impeded infiltration of water and gaseous exchange between soil and air. Precipitation will gradually incorporate this material into the soil where structural and chemical changes will occur. Soil pores will tend to be clogged and the nutrient balance of the soil will be shifted."

S10.3 Other chemical emissions

Table 10.2 presents our best estimates of the emissions of all materials from the Geysers development which may be of environmental concern.

H_2S is the only substance emitted in sufficient quantities to make it an acute environmental problem. The ammonia is emitted from both the off-gas stack and the cooling towers, the split being similar to that of H_2S. A small percentage of the ammonia is reinjected with the excess condensate. The ambient air concentrations of ammonia are probably roughly comparable to those of H_2S and, therefore, nowhere near any known threshold of toxicity or smell. The CO_2 emissions are of interest only in light of the general concern about the slow rise in atmospheric CO_2 over the past century (due mostly or completely to the combustion of fossil fuels); it is reassuring that the CO_2 emissions per kilowatt-hour are about 30 times smaller than from a coal burning power plant (Axtmann, 1975b).

Boron and arsenic form compounds sufficiently volatile to come up with the steam as vapors, but not volatile enough to be emitted from the power plants as gases. Rather, once they condense along with the steam in the condenser they remain in the cooling water. Boron is almost certainly present as dissolved boric acid, while the form of the arsenic is uncertain. During normal operation the only way that these substances can escape the power plant and get out into the environment is as constituents of the cooling tower drift, which is the drizzle of small droplets of cooling water which are carried out of the cooling tower by the air flow.

The amount of cooling water lost this way is rather small; in the case of Units 7 to 11 it is guaranteed by the manufacturer of the towers to be less than 0.015% of the water flow passing through the towers, and in the case of Unit 12 it will be less than 0.008%. For Units 1 to 4 the guaranteed maximum is 0.2% and for Units 5 and 6, 0.05%. (The manufacturer claims that the actual drift rates of the older Units are well below the guaranteed maxima.) Griffin et al., estimated the cooling tower drift emissions of B and As by assuming a drift rate of 0.015% for all eleven Units and an "average" cooling water analysis. We have corrected this figure to account for the higher drift rates of Units 1 to 6 to obtain our "Normal operation" values.

Crecelius, et al., (1976) have recently reported on the emissions of As (and also Hg and H_2S) from Cerro Prieto, and their results appear to indicate that essentially none of the incoming As is released to the atmosphere in gaseous form, in agreement with the conclusions of Griffin et al., in regard to the Geysers.

Mercury emissions from the Geysers have been reported on by Robertson, et al.(1976). They found that most of the mercury present in the incoming steam was in the form of elemental mercury vapor (∿70 to 80%). About half of the incoming mercury (∿40 to 60%) was found to be emitted from the off-gas stacks and cooling towers, again mostly (∿85%) in the form of elemental mercury vapor. The balance of the incoming mercury apparently mostly ended up in the cooling tower sludge which was found to contain between 0.02 and 0.2% mercury. The results of Crecelius, et al. (1976) regarding mercury emissions from Cerro Prieto were similar.

Of these three elements, only boron appears to be emitted in quantities of environmental concern. Boron concentrations of more than a few ppmw in soil or water are well known to be harmful to plants. It is reasonable to expect that boric acid would accumulate on leaves and on the ground in areas sprinkled by cooling tower drift, and then be delivered to plant roots as a fairly concentrated dose when dissolved by rain (Sharp, 1976). (Some boric acid is probably also delivered to Big Sulfur Creek by the same mechanism, but this is probably less important as fish are known to be resistant to boron concentrations of hundreds of ppmw.) Indeed, some damage to plants has been reported near Units 3, 4, 5 and 6 which emit most of the "normal operation" boron (Osterling, 1975; Sharp, 1976). However, poisoning by other cooling tower drift constituents or H_2S cannot be excluded, as these Units are dirtiest in all respects. The emissions of arsenic and mercury seem to be significant only in view of the contributions to the environment's inventory of these noxious elements they represent. Although these emissions are certainly undesirable, these elements are not known to have caused any environmental damage at the Geysers or to accumulate at any point in the local ecosystem other than stream bottom sediments.

A striking difference between B and As on the one hand and the various gases and Hg on the other is the extent to which pre-plant steam releases contribute to their total average emission rate. This is due to the smallness of the "normal operation" emissions of boron and arsenic, i.e., the power plants have a high degree of "natural abatement" in the case of these elements. This is exactly the same situation as with H_2S emissions from H_2S abated power plants. The boron and arsenic values in the far right

column of Table 10.2 are fair estimates of the increments by which total emissions of these substances are increased over the "normal operation" values when Unit 11's steam is stacked. The total emission of boron more than triples and that of arsenic goes up by a factor of six. Remember also that most of the "normal emissions" of B and As are due to Units 1 to 6. Relative to the "normal operation" emissions from Unit 11 alone, the stacking emissions are higher by factors of about 8 and 20 respectively! In this particular case these huge increases aren't really cause for concern because the quantities involved are small, but they dramatically illustrate the pitfalls of estimating total average emissions on the basis of normal operation emission rates alone. It seems likely that most of the cooling tower drift falls to the ground within a kilometer or two of its point of origin. (This "fallout" is well appreciated by anyone who has ever walked or driven past a Geysers Unit!) However, some of the smaller droplets probably dehydrate to dust before they reach the ground and are carried away by the wind in that form. It seems highly likely that the B and As compounds released with the preplant steam releases condense to a fine dust as soon as the steam bearing them mixes with air and cools and are transported away in that form. This may be the origin of the very fine bluish haze seen rising above the point at which a steam plume from a Geysers well completely evaporates on a dry day. In humid weather this dust is apt to serve as condensation nuclei, each mote becoming a minute droplet and rain or snow probably washes many of these droplets out of the air. Not shown in Table 10.2 are the very large amounts of water vapor emitted from the Geysers: roughly 8 kg/kWh. This is 2½ or 3 times

more than it would be in the case of a coal burning plant because of the much lower thermodynamic efficiency of the Geysers power plants and the preplant steam emissions which have no equivalent with fossil fuel plants. This large water emission almost certainly enhances fog formation when the relative humidity is just below 100%. However, it would be hard to argue that a bit more fog during the wet season (which is naturally quite foggy in this area) would really matter much; during the dry season the relative humidity is, of course, much too low for this to occur. It is conceivable that the unnaturally high and highly variable humidity caused by these emissions during the dry season could have some effect on local plantlife, but there is no evidence for this.

S10.4 Radon emissions

The radioactive gas radon-222 is normally present in ambient air in concentrations of 3×10^{-14} to 3×10^{-12} Curies/liter. (A Curie is the amount of any given radioactive substance in which 3.7×10^{10} atoms disintegrate per second. In the case of radon-222, a Curie is 6.5×10^{-6} grams.) The ultimate source of the radon is uranium-238 which is present in small amounts in most rocks; a uranium atom undergoes six sequential disintegrations and turns into an atom of radon as a result. Some of the radon produced in the reservoir rock diffuses out into the steam, and comes up to the surface with the steam when it is produced. Small amounts of radon occur in well water and natural gas for the same reason.

Radon-222 has a half-life of 3.8 days; i.e., half of any given number of atoms will disintegrate within that time. The disintegration of an atom of radon-222 produces an atom of polonium-218 which is also radioactive and undergoes four further disintegrations within a few hours. This burst

Table 10.2

Emissions of Environmentally Suspect Substances
from the
Geysers Development

	Units 1 to 11					
	g/kWh			Actual Average Amounts (kg/h)		Venting of steam supply of 106MW Unit (kg/h)
	From normal operation[1]	Preplant releases	Total	From normal operation	Total	
H_2S	1.6	0.3	1.9	790	970	210
NH_3	1.7	0.2	2.0	870	980	180
CO_2	29	4	33	$15x10^3$	$17x10^3$	$3.1x10^3$
B	$13x10^{-3}$	$19x10^{-3}$	$33x10^{-3}$	6.7	16	15
As	$6x10^{-6}$	$23x10^{-6}$	$29x10^{-6}$	$3.1x10^{-3}$	$15x10^{-3}$	$18x10^{-3}$
Hg	$28x10^{-6}$	$8x10^{-6}$	$37x10^{-6}$	$14x10^{-3}$	$18x10^{-3}$	$6.6x10^{-3}$
^{222}Rn*5	$1.8x10^{-7}$	$0.2x10^{-7}$	$2.1x10^{-7}$	0.093	0.11	0.02

*Radon values in Curies/kilowatt-hour and Curies as appropriate

Notes to Table 10.2

[1]B and As "normal operation" values based on estimates of Griffin, et al., (1974) for Units 7 to 10 but corrected for higher drift rates of Units 1 to 6. Drift rates of 0.2% for 1 to 4, 0.5% for 5 and 6, and 0.015% for 7 to 11 are assumed, and per kWh normal emissions from 1 to 4 and 5 and 6 are scaled accordingly. Values in Table are net power weighed averages. To obtain values for 1 to 4, multiply values given by 3.91, for 5 and 6, multiply by 0.98, for 7 to 11, by 0.29, and for 12, by 0.156. Actual values may be somewhat smaller than this, as actual drift rates are claimed to be smaller than the guaranteed maximum rates quoted above. NH_3 and CO_2 emissions assume "0% abatement", 8.9 kg/kWh steam rate, and steam concentrations given in "Averages" column of Table 8.1. Hg value based on empirical value of 2.99 g/h reported by Robertson, et al., (1976) for Hg emissions from Units 7 and 8 together

[2]Except for H_2S, Hg and Rn, based on "Average" values of Table 8.1 and preplant steam releases of 1.2 kg/kWh. Hg value based on 6.6 g/h value for Hg delivered to Units 7 and 8 together during normal operation reported by Robertson et al., multiplied by 1.2/8.9 to give average preplant emission rate.

[3]All values except for Rn calculated assuming 8.9 kg/kWh steam rate and "Average" values of Table 8.1.

[4]Except for last column, H_2S emissions calculated as in Table 8.7.

[5]Radon emissions based on 0.0098 Ci/h normal emissions from Unit 7 reported by Serpa et al., (1974) and steam rates as above.

of radioactivity results in an atom of lead-210 which is a much more weakly radioactive isotope with a half-life of 21 years. Another three disintegrations finally turn lead-210 into the stable isotope lead-206 of which automobile batteries are made.

As polonium is a solid rather than a gas, the newly formed polonium atom sticks onto the first dust mote it encounters. Because of this, atmospheric dust is always somewhat radioactive, and the small amount of dust and gaseous radon always present in the lungs continually delivers a dose of radiation to lung tissue considerably greater than any other part of the body normally receives. Some scientists believe that this natural radiation exposure of the lungs is responsible for a large part of the natural incidence of lung cancer. It is even possible that the way cigarette smoking causes lung cancer is that the fine smoke particles deliver an even larger amount of polonium-218 to the lung tissue. Manmade radon emissions don't do anything different – rather, they simply increase this natural radiation exposure in the same proportion that they increase radon concentration in the air. (This is not at all the same as saying that they increase the incidence of lung cancer in the same proportion. Actually, no one really knows what the dose-response relationship is at radiation levels this low.)

Most of the radon released from the Geysers is released from the off-gas stacks (Serpa, et al., 1974). The remaining few percent are released from the cooling towers, and it seems highly unlikely that more than the most minute fraction is reinjected. The only conceivable way of abating the radon emissions would be to compress and reinject the condenser off gases.

Fortunately, the total randon emissions from the Geysers are rather small. Anspaugh and Phelps (1975) have reported the results of a large number of measurements of the concentrations of radon-222 and its decay products in the Geysers area. The only measurements higher than the California ambient air standard for radon-222 of 3×10^{-12} Ci/liter were those made inside the condenser cavities and steam exhaust pipes of several of the Units soon after shutdown. Even here, where the only people who might ever be exposed to the radon are maintenance workers (and even they rarely and for short periods of time), the radon concentration was never much higher than about 10^{-11} Ci/liter. All of the measurements made outdoors were well below 3×10^{-12} Ci/liter. In general the outdoor concentrations were so low that on the basis of them alone one would probably not even guess that there was a radon emission source in the immediate area. The concentrations inside the power plant buildings were generally somewhat higher, but still well below 3×10^{-12} Ci/liter. Anspaugh and Phelps also ran some measurements on the concentrations of radon decay products in soil samples in a search for unusual accumulations of them. In no case were any unnaturally high concentrations found. All in all, much as is the case with the As and Hg emissions, the only significance of the radon emissions from the Geysers lies in the minute increase over naturally emitted radon concentrations they represent. The magnitude of this contribution may be judged by comparing it to the natural seepage of radon from the ground, which Anspaugh and Phelps quote as averaging 0.75 atoms/cm^2/sec. The 0.11 Curie/h total average emission rate from the Geysers is about equal to that from an average 70 square kilometers of

land. Furthermore, the effects of these releases are more or less evenly spread over most of the continental U.S. rather than being concentrated near the Geysers (because prevailing winds carry most of the emitted radon far to the East before it decays and does its potential damage).

Serpa and Lorenz (1975) have also studied the possible accumulation of radon decay products in the sludge which accumulates in the cooling tower basins. In the case of Units 1 to 10, the composition of the sludge (when dry) is about 65% sulfur and 35% dust, both from the steam and from the air. (In the case of Unit 11 the sludge also contains a large amount of iron hydroxide precipitate.) When wet it contains about 20% water and has a density of about 2 g/cm^3. (Unit 11 sludge is 90% water when wet, and is corresponding lighter and much more voluminous.) On a dry weight basis, about 1.9×10^5 kg of sludge accumulate in each of Units 5 to 10 over a two year period, corresponding to about 0.23 g/kWh.

Serpa and Lorenz determined the concentrations of various gamma emitting radionuclides in sludge from three Geysers Units (4,6 and 10) and three wet tower equipped fossil fuel plants (Avon, Martinez and Kern). They found an average of 55×10^{-12} Ci/g (dry weight) of all radionuclides measured at the Geysers, and 27×10^{-12} Ci/g at the three fossil fuel plants. However, most of the activity was due to fall-out radionuclides rather than radon decay products, which means that the higher radioactivity of the Geysers sludge was not due to the radon in the steam. Using typical reported values for the ambient air concentrations of two of these radionuclides and the cooling tower air flow rate (about 9×10^6 kg/h for a 53 MW Unit), they determined that the measured activities of the sludge

were consistent with the assumption that the cooling towers scrubbed and retained essentially all of the radionuclides contained in the air going through them. This unexpected scrubbing must be granted to be a minor environmental credit, as it is better to have this fallout buried at a solid waste disposal site than to have it floating around in the air.

Unfortunately, Serpa and Lorenz were apprently unable to determine the concentrations of lead-210 (the only long-lived radioactive decay product of radon-222) with their instruments because of the low energy of its gamma emissions. Instead, they estimated the amount present by assuming complete scrubbing of typical atmospheric concentrations of lead-210 from the air flow through the towers. Their estimate was 9.3×10^{-12} Ci/g, which corresponds to about 2×10^{-12} Ci/kWh. This is only about 2% of the quantity of lead-210 which the radon emitted from the Geysers ultimately decays to. In other words, the radon decay product scrubbing effect of the Geysers cooling towers comes nowhere near to compensating for the radon emissions. Including the various fallout radionuclides doesn't change this proportion very much, and we see that, after all, the Geysers development is a net atmospheric radionuclide emitter, albeit a minor one.

The LFE Company of Richmond has also measured radon-222 and its decay products in various materials in the Geysers area. The results reported (LFE, 1975) are in general agreement with those of the other studies cited. In particular, the 2.8 to 66.0×10^{-12} Ci/g range of lead-210 concentrations found in the cooling tower sludge of five Units is consistent with the estimates of Serpa and Lorenz.

CHAPTER ELEVEN - POWERPLANT HYDROGEN SULFIDE ABATEMENT

S11.1 The basic principles and strategies of H_2S abatement

In this chapter we expand upon the discussion of possible means of H_2S abatement begun in Chapter VII. Table 1.11 presents various possible means of which we are aware of removing H_2S from the major steam and/or cooling water flows. Some of these methods actually destroy the H_2S in the steam or water, while others remove it in the form of a small gas or aqueous solution stream for destruction elsewhere. Not included are the various possible means of disposing of the H_2S once it is separated such as the Stretford process; this is a rather different matter and it will be discussed in S11.15.

As is evident from the table, many diverse schemes of abatement have been proposed. However, regardless of the exact nature of the scheme, there are certain things that it must not do: it must not require outside water if outside water is not available, it must not degrade incoming steam quality to an intolerable degree, it must not grossly increase backpressure, it must not rely upon the reaction of the full H_2S flow (or that of any other steam component) with externally supplied chemicals, it must not grossly degrade plant reliability, and it must not be a nuisance to operate or maintain. Given the huge mass flows through a geothermal powerplant and the (in most cases) thermodynamically marginal nature of the resource, these constraints are deadly serious ones; if a scheme violates any one of them, it is not even worth considering. On the other hand, an abatement scheme may be permitted to use as much air as necessary (as long as this doesn't result in air pollution), reasonably generous amounts of steam, electric power, cooling capacity, any of the various steam constituents in the quantities in which they are practically available, and anything that can be

conveniently made out of them. In particular, it can employ as much CO_2 or SO_2 as may seem necessary. Also acceptable is the use of such things as catalysts and regenerable gas absorption fluids which are not consumed.

Preplant removal of H_2S has two major advantages over removal at later stages. One is that, if truly successful, preplant removal would allow the design of the powerplant proper to be determined by thermodynamic and economic considerations alone; in practice, this means that the basic Units 5 to 10 design or a scaled up version of it could be used forevermore. The other advantage is that the operation of a preplant abatement system could probably be made pretty much independent of the operation of the powerplant itself. A preplant system might need electric power for pumping or some excess condensate for makeup water, but these could be supplied by other nearby powerplants in case of a plant outage. This means that the abatement system could stay on during a period of steam stacking due to plant outage and continue to abate the stacked steam.

Another important attribute of an abatement system is its suitability for use in retrofitting existing powerplants. Ideally, it should be possible to install an abatement system by simply tacking it on with little or no modification of the powerplant itself. Preplant abatement systems also tend to be fairly good in this respect, as the only significant modifications which most of them seem to demand is to adapt the turbine to operate on somewhat lower pressure saturated steam. Such a modification isn't really a very big thing, as the turbines are readily accessible and have to be periodically overhauled in any case. Some other abatement systems, most notably the iron catalyst, need only be added on to the plant with little or no other modification required. At the other extreme is the surface condenser system which, if employed as a retrofit, would just about involve completely disassembling the Unit in order to replace the

condenser which is located beneath most of the other equipment.

Something that must be remembered in evaluating these various systems is that they may not be equally useful in dealing with all of the various types of geothermal fluids. For example, preplant oxidation presently appears promising only in the context of preplant hot water treatment. More subtle is the effect of ammonia in the steam which appears to be potentially important in the case of the steam convertor and surface condenser systems. It appears that these systems (and especially the latter) should be quite effective in shifting H_2S to the off gas if the incoming steam contains little or no ammonia. Indeed, at least the surface condenser system appears to be a completely adequate (although not perfect) solution of the H_2S problem in the absence of ammonia. However, large amounts of ammonia in the Geysers area steam could hurt the performance of these systems there.

The ammonia problem arises because both of these methods are based on the separation of an H_2S rich gas phase from a relatively H_2S free liquid (condensate) phase. The success of this approach clearly depends upon the solubility of H_2S in the liquid phase. In the absence of ammonia the dissolved H_2S is present as simply H_2S, and the solubility is reasonably low. However, ammonia is a moderately strong base and can react with H_2S to produce bisulfide ion (HS^-). This effectively increases the solubility of H_2S and thereby reduces the efficiency of its separation from the liquid phase. The presence of CO_2 helps matters somewhat because it is a slightly stronger acid than H_2S and tends to replace HS^- with bicarbonate (HCO_3^-) to some extent, thereby releasing H_2S. However this reaction is slow, and this considerably reduces the ability of CO_2 to counteract the effect of ammonia. All this will be discussed in greater detail in S11.6 and 7.

Table 11.1

Powerplant H_2S Abatement Strategies

Strategy	Implementation	Status
Preplant removal:		
Physical separation	Steam converter (condenser/reboiler)	Some Units at Lardarello[1]
Absorption scrubbing	Metal oxides, $CuSO_4$ solution	R&D[2]
Upstream oxidation	Air injection, H_2O_2 injection	R&D
Condenser partition shift:		
Condenser redesign	Surface condensers	Planned for Geysers Units 13,14,15
pH control	SO_2 recirculation	Burner/scrubber, Geysers Unit 4[3]
Increased off-gas volume	Larger gas ejectors,	Design change, Geysers Units 13,14,15
Increased off-gas volume	Air bleed into condenser	Tried at Geysers, limited effect
Complete reinjection:	surface condensers binary system	Obvious choice if outside cooling water available
Condensate treatment:		
Steam stripping	Condensate reheater in surface cond.	Built into surface condensers
Catalytic air oxidation	Fe, Ni catalysts	Effective; Geysers Unit 11[4]
Chemical oxidation	H_2O_2 oxidation	Possible backup for surface condenser system

[1]Used for thermodynamic reasons if gas fraction exceeds 10% rather than for H_2S abatement specifically.

[2]Sodium carbonate solution scrubbing employed at some Lardarello Units for boric acid recovery.

[3]Primarily intended as H_2S disposal device.

[4]Planned for Geysers Unit 12, and will be used to retrofit Units 3,4,5 and 6, but causes corrosion problems.

S11.2 Steam convertors

The use of steam convertors to remove gases from geothermal steam is literally as old as the geothermal industry itself. All of the powerplants installed at Lardarello and Castelnuovo (near Lardarello) prior to 1940 (totalling 140 megawatts of capacity) were equipped with steam convertors. The very first one of these plants was installed in 1913 (Villa, 1975). Figure 11.1 is a rough schematic of one of these pre-war steam convertors. The basic idea is that when steam is condensed by removing heat, the resulting condensate is relatively free of dissolved gases which mostly remain in the residual steam and gas phase. The gas phase is separated from the condensate, and the condensate is again boiled to make steam. The heat released from the condensing steam is transferred through a heat exchanger to the boiling condensate. The condensate is almost but not completely boiled down to make the secondary steam. The little bit that remains contains the boric acid that was originally in the primary (or endogenous) steam concentrated to about 1% by weight (of boric acid rather than of boron itself). This boron was extracted and sold, which used to be an important secondary use of the geothermal resource. (Actually, Lardarello was originally developed as a boric acid recovery operation, and the first wells were drilled for this purpose. The first powerplants were installed to provide power for this operation. The steam convertor actually seems to be descended from early geothermally heated evaporative boric acid concentrators; in other words, in this case the abatement system seems to have been invented before the power plant!)

The steam convertor was not originally intended to be an H_2S abatement system and has never been used this way in Italy. (They probably do remove most of the H_2S from the steam, but the H_2S is apparently simply released to the

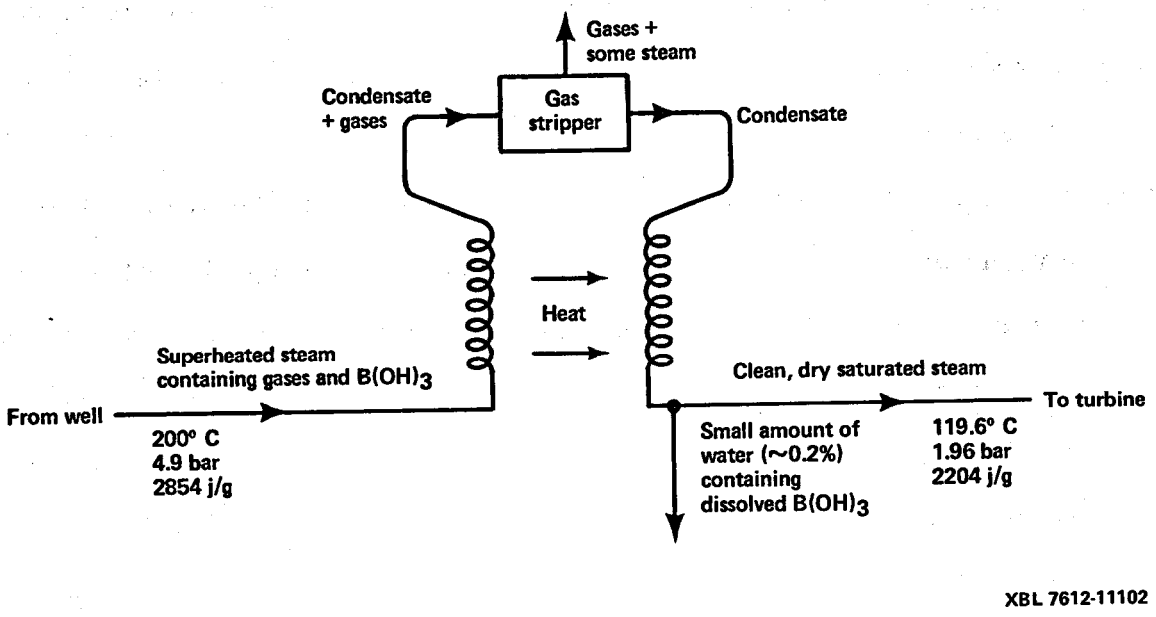

Fig. 11.1 Schematic of a typical steam converter unit.

atmosphere rather than being destroyed.) The major reason for using them was that prior to the development of effective mechanical gas ejectors just before the War, there was literally no other way (short of atmospheric exhaust) to deal with the high gas content of the Lardarello area steam, which is typically about 6.5% by weight and sometimes as high as 30%. Steam jet ejections were available but could never have been practical with these huge gas concentrations on account of their gross thermodynamic inefficiency and correspondingly high steam consumption per unit gas removed.

Although they are quite effective in removing gases from the steam, steam convertors have the major drawback of seriously degrading the quality of the steam. This is inevitable, as there is no way that heat could flow from the condenser side to the evaporator side if the latter did not produce the secondary steam at a lower temperature and pressure. (It is not clear from the available reports what happens with the enthalpy lost by the steam passing through the convertors. Some of the loss is no doubt due to ordinary heat leakage and, perhaps, some externally supplied water is added on the evaporator side to generate more steam.) The result of this steam degradation was that these plants consumed about 14 kilograms of steam per kilowatt-hour rather than the 8kg/kWh typical of the modern mechanical ejector equipped plants (Zancani, 1975). All of the convertor equipped plants were destroyed during the War and were mostly replaced by mechanical gas ejector equipped plants after the War. (There were only 20 MW of convertor equipped capacity among the postwar plants.) This change was made mostly because of the miserable thermodynamic performance of the converter equipped plants, and also because of the availability of cheap American borax after the War.

However, convertor R & D has continued in Italy. Zancani (1975) reports

that a modern convertor equipped plant would have a steam consumption equal to that of a mechanical ejector equipped plant with steam containing 12 weight% CO_2 (13.4 kg/kWh), and do better than the latter at higher gas fractions. At lower gas fractions its performance would not be as good as that of the ordinary plant, but not by nearly as much as would have been the case with the prewar convertors. Zancani presents a schematic and mass balance for a plant taking steam containing 5% CO_2 at 180°C and 6.08 bar. This system uses two steam convertor stages to produce 51 MW worth of clean steam, and the residual gassy steam fraction is sent through a small turbine which exhausts to the atmosphere and produces an additional 2 MW. The main turbine is equipped with an ordinary contact condenser. If H_2S abatement were intended the small turbine would probably be equipped with a surface condenser or air cooler, and the gas sent to an H_2S destruction facility. This system would have a steam consumption of 9.9 kg/kWh which is quite low enough to be acceptable. Unfortunately, no cost estimates are presented, and the proposed system seems sufficiently complicated to be expensive. Its complexity may also make it difficult to retrofit to, although a less efficient one-stage convertor system should be easily retrofittable. If the incoming steam contains little or no ammonia the H_2S removal efficacy of the steam convertors should be fairly good. The Italian discussions of the performance of the steam convertors indicate that essentially all of the CO_2 in the incoming steam (CO_2 is the dominant gas by far at Lardarello) is removed by the steam convertors. As H_2S is only about three or four times more water soluble at these temperatures, the fraction of H_2S getting past the convertors should be about three or four times greater than the fraction of CO_2 getting through them. As the latter fraction is reportedly small, the former should also be tolerable. Besides abating the H_2S, steam convertors would also essentially completely eliminate

boron emissions. Arsenic and mercury emissions might also be reduced. A steam converter would also prevent dust from reaching the turbines which would tend to reduce blade damage, although the greater degree of condensation within the turbine due to the saturated nature of the secondary steam would have the opposite effect. Finally, the preplant removal of gases would reduce corrosion problems throughout the plant and, of course, reduce the steam (or power) requirements of the gas ejectors.

Unfortunately, the utility of this system at the Geysers is uncertain due to the presence of ammonia in the steam. The unavailability of detailed design and operational data concerning the steam convertors and the lack of knowledge concerning the complex chemistry of CO_2 at these temperatures make any quantitative estimate of abatement efficiency in the presence of ammonia impossible at this time.

Actually, the steam convertor could be rendered 100% effective in abating H_2S by simply supplying clean water from an outside source to make the secondary steam from rather than using the condensate. The condensate could then be completely reinjected. This would actually constitute a binary system in which the secondary fluid is also water. However, it presents the same problem of externally supplying large amounts of water as does the "closed system" version of the surface condenser plant. Also, some heat would inevitably be lost with the condensate, and the heat exchangers necessary to reduce this loss (though never quite eliminate it) would further increase the complexity and cost of the powerplant. All in all, if outside water were available surface condensers would probably be the better choice of the two.

S11.3 Preplant oxidation

PG & E has briefly experimented with injecting oxygen into the steam supply of Unit 2 before it enters the turbine. The results were not encouraging in that injecting twice as much oxygen as is stoichiometrically required for full oxidation caused an H_2S reduction of only about 5%, a value which may actually be no different from zero if the possibility of experimental error is recognized (Allen, 1974). Upstream injection of hydrogen peroxide (H_2O_2) has also been tried with the same unimpressive results. Catalytic enhancement of the rate seems dimly possible, but the whole idea has been abandoned in favor of more promising approaches.

Research on upstream H_2S removal from geothermal brines by upstream injection of oxygen is being pursued by the Dow Chemical Company with funding from ERDA (Wilson, 1973 and ERDA, 1976). Various simulated brines with compositions spanning the "low salinity" range and temperature of 121° to 177°C are being experimented on. The early results have been quite encouraging. At a mole ratio of injected oxygen to H_2S of 1.5 essentially all of the H_2S is removed in one minute. Unfortunately, this much excess oxygen causes corrosion problems, and a ratio of 1.25 or 1.3 to 1 seems to be a reasonable compromise between abating H_2S and avoiding corrosion. Some H_2S survives, and a longer reaction time is required. However, in no case does a reaction time of more than about five minutes seem necessary. Brines containing ammonia have not yet been tried, but will be in the near future (J. S. Wilson, Dow Chemical, private communication).

As good as all of this sounds, oxygen injection is not yet a solution to anyone's immediate H_2S problems. First of all, it is clearly not applicable to natural steam plant abatement since the reaction takes place in the liquid phase

and requires a length of time far greater than that which the steam spends between wellhead and turbine. Second, even in the case of liquid producing geothermal fields a mixture of water and steam flows up the well rather than water alone due to flashing in the formation and wellbore. Most of the H_2S can be expected to be in the steam phase of this mixture and, therefore, untreatable by this method. This problem will only be resolved by the development of the so-called down-hole pump which will push up the brine in completely liquid form. Third, the quoted reaction times are fairly long, and what this means is that the brine must somehow be held up long enough for the reaction to complete itself before proceeding to the steam separators and powerplant. Fortunately, given reasonable assumptions concerning plant and piping system design, it appears that the time it takes the brine to flow from wellhead to plant will suffice for the reaction if the oxygen is injected at the wellhead. However, some sort of reaction vessel may be needed for the brine produced by the wells closest to the power plant, although this vessel probably need not be larger than a few tens of cubic meters at the most in the case of a 100 MW plant. Still, even a vessel this size will be no trivial matter considering the high temperatures and pressures involved, and it is clear that the design will require careful optimization when (and if) the matter arises in practice. Finally, air seems rather more likely to be used instead of oxygen. This simply means that a fairly large amount of nitrogen will be injected into the system and will have to be dealt with by the gas ejectors. However, this really seems to be a secondary nuisance rather than a fundamental problem.

There actually is one use for this method that we can forsee at the Geysers. It would probably work quite well as a means of removing H_2S from steam convertor condensate prior to its reevaporation if need be. However, a plant taking 10^6 kg/h

of secondary steam (about 100 MW worth if Zancani's design is employed) would need a reaction vessel of 83 tonnes capacity to give a five minute reaction time. It seems fairly certain that this would have to be considerably reduced to make the scheme acceptable.

S11.4 Upstream absorption scrubbers

The usual method used to selectively remove some component from a gas mixture (which geothermal steam is) is to contact the gas stream with an appropriate scrubbing solution in a counterflow tower so that the gas to be removed dissolves in the solution. Some drop in temperature and pressure would be an inevitable result of making the steam flow through the scrubber, but available indications are that pressure drops of much less than 1 bar should be attainable, which is rather better than what steam convertors can do. With this small of a pressure drop the maximum possible temperature drop probably would also not be very important.

Actually, absorbing the H_2S is easy; the trick is to regenerate the absorber solution for reuse. The reader should remember this well: without regeneration of the solution or some means of producing it as a geothermal by-product, no upstream absorption scheme is of any practical use whatsoever, regardless of its scrubbing efficacy.

Upstream absorption of H_2S by aqueous cupric sulfate ($CuSO_4$) solution has been investigated by the EIC Corporation of Newton, Mass., with funding from both ERDA and PG&E. The basic chemical reaction involved is approximately

$$Cu^{++} + SO_4^{=} + H_2S \rightarrow CuS(s) + HSO_4^{-} + H^{+}$$

(The actual precipitate was a nonstoichiometric sulfide whose composition averaged around $Cu_{1.2}S$. A small amount of free sulfur was apparently produced by the partial reduction of the copper.) Two reports describing this work have been released: Harvey et al. (1976), and EIC Corp. (1976). The chief result was that at NH_3/H_2S mole ratios of 1.6 to 1 or higher (which is typical of the Geysers) H_2S removal efficiencies of better than 90% were consistently obtained. This performance deteriorated markedly at NH_3/H_2S mole ratios less than 1 to 1. In the latter case, as well as in the absence of ammonia, the scrubbing efficiency was as good as though ammonia were present as long as the pH remained above about 1.2 (as measured after cooling the scrubbing solution down to room temperature). However, the pH quickly fell at the low ammonia concentrations, and the H_2S removal efficacy dropped along with it. This drop of scrubbing efficacy appears to be most probably due to a kinetic inhibition of the precipitation of CuS at these low pH's (W.W. Harvey, private communication). Along with the copper sulfide the reaction produces sulfuric acid, and the pH drops until the reaction stops. The beneficial effect of the ammonia is due to its ability to neutralize the sulfuric acid which is produced and, thereby, keep the pH from dropping. It would certainly be easy enough to control the pH in the absence of ammonia by neutralizing the sulfuric acid with externally supplied alkali (NaOH would probably be required, as the cheaper CaO would cause $CaSO_4$ to precipitate). However, this strikes us as impractical. The other possible means of dealing with the sulfuric acid would be to simply dispose of the scrubbing solution after removing all of the copper from it in the form of copper sulfide. The separated sulfuric acid solution would, of course, have to be disposed of somehow or, perhaps, employed in the regeneration of the cupric sulfate. However the sulfuric acid problem

is dealt with, it seems clear that the relatively low ammonia concentrations in the geothermal steam from most sources will tend to restrict the applicability of the scheme to the few areas which do have significant amounts of ammonia in the steam (such as the Geysers).

The big question is how to go about regenerating the cupric sulfate. In principal, this is well known as the copper sulfide produced is quite similar to natural copper ores with which metallurgical chemists are well acquainted. A leaching process is favored at this time, and we have no doubt that a successful one will be developed. As with the scrubbing step itself, chemical performance alone will not determine the overall viability of the regeneration process; it must also prove itself reasonably simple to operate and maintain, and it must be economical.

The feasibility of using solid H_2S absorbents for H_2S scrubbing has been investigated at the Battelle Northwest Laboratories with ERDA funding (Li _et al._, 1976). It was found that zinc oxide (ZnO) did an excellent job of removing H_2S from the steam. However, no means of regenerating the ZnO was found, and the work is being discontinued for this reason (R. Loose, private communication).

It is noteworthy that substances other than H_2S can also be effectively removed from the steam. For example, the EIC workers found that their scrubbing solution removed rock dust, ammonia, and boric acid from the steam quite well. In fact, upstream scrubbing with sodium carbonate (Na_2CO_3) solution has in the past been used in Italy to recover the boric acid in the steam on a commercial basis (Dal Secco, 1970).

S11.5 The "Deuterium Process"

The Deuterium Corporation of White Plains, New York has installed and tested a device intended to remove the H_2S from a portion of Unit 7's steam supply before it reaches the plant. This device is known to be of the liquid absorption scrubber type, but the chemical reaction employed is proprietary information which is presently unavailable to us. The early test results indicate 90% or better H_2S removal, but the regeneration problem has yet to be addressed.

However, the Deuterium Corporation is in the business of producing heavy water (D_2O) and the major goal of their participation is to evaluate the feasibility of heavy water production at the Geysers. As it happens, the so-called "GS process" for heavy water production uses copious amounts of process steam, electrical power and H_2S (Proctor, 1966). The source of the deuterium which is concentrated is water, most of which leaves the plant polluted with H_2S. There is reason to believe that geothermal condensate is a suitable type of water for this application and if the processing is limited to that portion of the condensate which is to be reinjected, the added H_2S will cause no harm. Overall, the production of heavy water seems to be an ideal "alternate use" of geothermal energy, and indeed, Valfells (1970) has presented a detailed schematic of a geothermal heavy water plant designed for use in Iceland.

One thing should be utterly clear to the reader; the H_2S scrubber is only one component of the Deuterium Co. device and should work as well (or not as well) in the absence of an associated heavy water plant as in its presence. The heavy water plant itself would be a secondary geothermal industry rather than

an abatement system. We doubt whether a suitable site for a full scale heavy water plant could be found in the rugged Geysers area. Perhaps the required water and H_2S flows could be piped from the Geysers over into Lake County, but this brings up the obvious question of whether that area is suitable for supporting two heavy industries rather than one.

S11.6 Condensate chemistry in contact condenser plants

Figure 11.2 presents a simplified mass balance for Geysers Unit 3. It is not an exact mass balance, but it is probably as good as any that are presently available. Immediately evident is how much more important ammonia is in the chemical composition of the cooling water than it is in the steam. Ammonia is extremely water soluble and reacts with the acid gases (CO_2 and H_2S) to give ammonium (NH_4^+) ion which effectively further increases its solubility. This means that very high concentrations of ammonia build up before losses to the atmosphere and through reinjection equal addition by incoming steam. Boric acid is another major cooling water constituent which, unfortunately, was not included in calculating this mass balance (see Table 10.1). Although its concentration in the steam is rather small, it is completely nonvolatile and builds up to concentrations high enough for reinjection to remove as much as the steam brings in. Also not shown is the sulfate ion ($SO_4^=$) which is apparently a minor constituent in most condensate analyses and a major one in a few. No other substances are known to be dissolved in the cooling water of the existing Units in numerically significant quantities. (However, dissolved oxygen and, perhaps, transition metal

ions may be chemically important despite their small concentrations in the cooling water.)

Table 11.2 presents a detailed chemical interpretation of the changes that the cooling water undergoes when it goes through the condenser. (The various ionic equilibria involved have been calculated mostly following Truesdell and Jones, 1974 , but not using their program.) The amount of boric acid shown in the table was estimated from the reported pH of the incoming water. The value arrived at is roughly comparable to that reported in the various analyses in Table 10.1. The relatively small amount of boric acid added by the incoming steam is ignored as including it would make no significant change in the results. No attempt has been made to fit the reported hotwell pH, as this value is too high to be consistent with the reported gas concentrations regardless of how much of whatever else (within reason) may or may not be present. In other words, there was some inconsistency or error in the source data upon which we based our calculations.

It seems simplest to discuss the chemistry of gas absorption by the cooling water stream in terms of a slightly artificial set of fundamental reactions. In terms of kg-moles/hr and ignoring the participation of water molecules in them for simplicity, these reactions are:

simple solution of CO_2 and H_2S without chemical reaction

$$9.4\ CO_2(g) \rightarrow 9.4\ CO_2(aq) \tag{6.1}$$

$$1.6\ H_2S(g) \rightarrow 1.6\ H_2S(aq) \tag{6.2}$$

solution of NH_3 along with CO_2 and H_2S with simultaneous acid-base reaction

$$3.5NH_3(g) + 3.5(CO_2(g),\ H_2S(g)) \rightarrow 3.5NH_4^+ + 3.5(HCO_3^-,\ HS^-) \tag{6.3}$$

(Where $3.5(CO_2,H_2S)$ indicates some combination of CO_2 and H_2S which totals 3.5 kg-moles, etc.)

Also important are solution of CO_2 and H_2S with simultaneous acid-base reactions with basic species already present in the cooling water when it enters the condenser:

$$2.3NH_3(aq) + 2.3(CO_2(g),\ H_2S(g)) \rightarrow 2.3NH_4^+ + 2.3(HCO_3^-,\ HS^-) \qquad (6.4)$$

$$2.0B(OH)_4^- + 2.0(CO_2(g),\ H_2S(g)) \rightarrow 2.0B(OH)_3 + 2.0(HCO_3^-,\ HS^-) \qquad (6.5)$$

$$0.4CO_3^= + 0.4(CO_2(g),\ H_2S(g)) \rightarrow 0.4HCO_3^- + 0.4(HCO_3^-,\ HS^-) \qquad (6.6)$$

All in all, 6.2 kg-moles of CO_2 enter solution as HCO_3^- versus 9.4 kg-moles picked up as an un-ionized CO_2, and 2.0 kg-moles of H_2S enter solution as HS versus 1.6 kg-moles as un-ionized H_2S. All of the incoming ammonia enters solution as NH_4^+ and, indeed, half of the un-ionized ammonia brought in by the cooling water is converted to NH_4^+. Clearly, the transport of H_2S to the cooling tower is in large measure due to the formation of HS^- by acid-base reaction. The formation of HS^- (and HCO_3^-) is overwhelmingly due to the presence of ammonia. This is obvious in the case of reactions (6.3) and (6.4) which involve direct reactions of the acid gases with ammonia, but not so obvious in the case of reactions (6.5) and (6.6) in which the reacting bases are $B(OH)_4^-$ and $CO_3^=$, respectively. However, consider that these two species are the conjugate bases of the acids $B(OH)_3$ and CO_2 which are delivered to the plant by the steam; the basic species are there only because the acids from which they are derived have reacted with ammonia. A moment's reflection shows that the presence of boric acid in the solution has no really significant effect upon the absorption of H_2S and CO_2, for if $B(OH)_4^-$ were not available to react with these gases, the pH of the incoming cooling water would be slightly higher and there would be more un-ionized ammonia available to react with them.

Exactly the opposite processes occur in the cooling tower where the very large air flow strips the various gases from the cooling water stream. (Note,

however, that the quantities involved are slightly different because some of the water leaving the cooling tower is reinjected rather than being returned to the condenser.) Since the solubilities of CO_2 and H_2S in water are not very large, the un-ionized fractions of these gases are almost completely stripped on passage through the cooling tower. The stripping action is even powerful enough to undo the acid-base reactions (6.3) to (6.6) to some degree, thereby allowing some of the CO_2 and H_2S brought to the tower in ionized form to be released to the atmosphere (in un-ionized form). Some of the un-ionized ammonia produced by undoing reactions (6.3) and (6.4) is also stripped off and released to the atmosphere. However, unlike the other two gases, un-ionized ammonia is <u>extremely</u> soluble in water. It is so soluble, in fact, that the amount stripped off is smaller than the amount released by the undoing of reactions (6.3) and (6.4), (i.e., by the stripping of CO_2 and H_2S), and the water which is returned to the condenser contains more un-ionized ammonia than does the water leaving the condenser. The condition of chemical equilibrium assures the presence of large amounts of NH_4^+ along with the un-ionized ammonia, which, in turn, demands the company of an equivalent amount of the negative ions. HCO_3^- is the most important counter-ion because it is the least strongly basic of the four.

The stripping of the acid gases also regenerates $B(OH)_4^-$ and $CO_3^=$ which then returns to the condenser for a new load of CO_2 and H_2S. The net effect of these acid-base reactions is to considerably increase the amount of CO_2 and H_2S released from the cooling tower. Their occurrence is (directly or indirectly) due to the presence of ammonia in the stream and, indeed, it is apparent that ammonia utterly dominates the acid-base chemistry of the condensate.

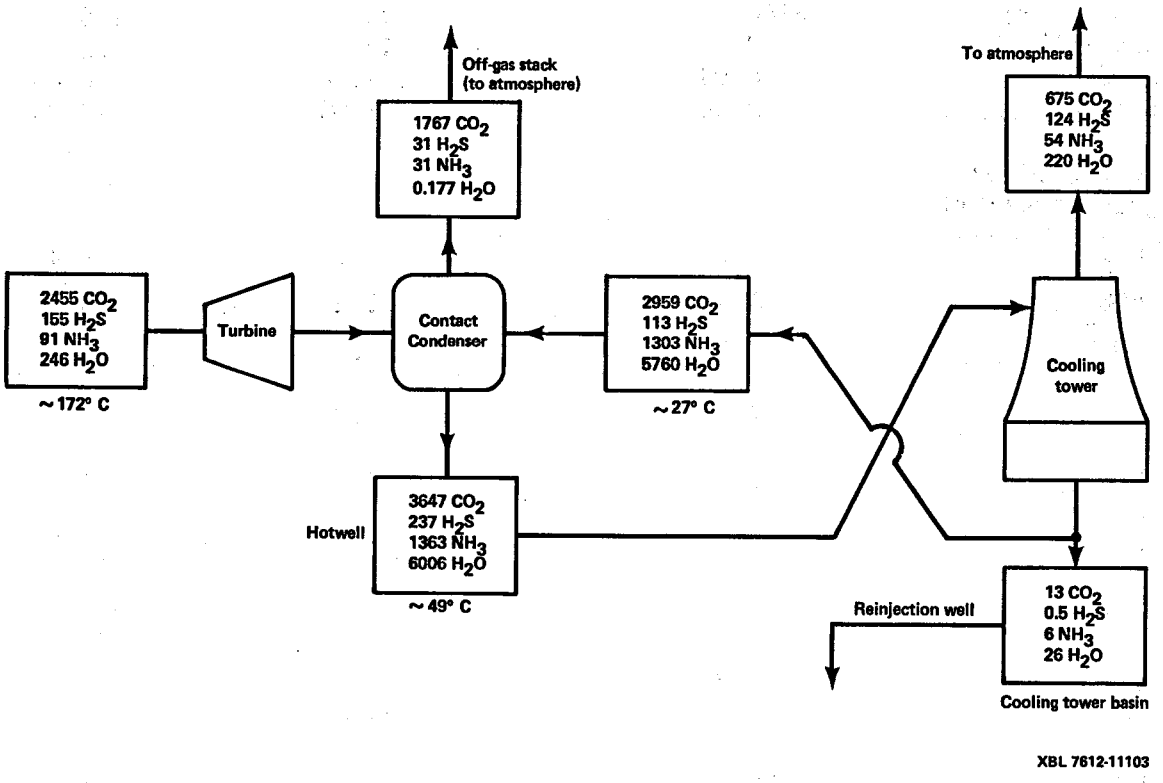

Fig. 11.2 Simplified mass balance for Geysers Unit 3.

Water flows in metric tonnes/hour, other mass flows in kg/hour. H_2, N_2, CH_4 and O_2 ignored. Adapted from Fairfax and McCluer (1972).

Table 11.2

Simplified Condenser Chemical Balance,
Geysers Unit 3
(Based on Figure 11.1)

		Incoming Water (From Cooling Tower)	Outgoing Water (Hot Well)	Difference
Water flows (t/hr)		5760	6006	246
Temperature (°C)		27	49	22
pH (reported)[1]		8.05	7.30	-0.65
pH (calculated)[2]		8.04	7.09	-0.95
Other material flows (Kilogram-moles/hr):				
	CO_2	1.2	10.6	9.4
	HCO_3^-	65.5	72.2	6.6
	$CO_3^=$	0.5	0.1	-0.4
Total	CO_2	67.2	82.9	15.5
	H_2S	0.2	1.8	1.6
	HS^-	3.1	5.1	2.0
	$S^=$	~0.0	~0.0	~0.0
Total	H_2S	3.3	7.0	3.6
	NH_3	4.6	2.3	-2.3
	NH_4^+	72.0	77.9	5.9
Total	NH_3	76.6	80.2	3.5
	$B(OH)_3$	32.2	34.2	2.0
	$B(OH)_4^-$	2.4	0.4	-2.0
Total	$B(OH)_3$	(34.6)[3]	(34.6)[3]	~0.0

[1]Rounded off from values reported by Fairfax and McCluer (1972).

[2]Calculated from chemical compositions and temperatures given.

[3]Estimated on basis of incoming pH. Little or no sulfate present, or pH's would be much lower.

S11.7 The chemistry of surface condensers

The main difference between a contact condenser and a surface condenser is, of course, that in the latter the cooling water does not come into contact with the condensing steam. Rather, condensation occurs on the outside surface of metal tubes which have the cooling water flowing through them. Chemically speaking, this means that the gas and condensate which leave the condenser cavity are completely derived from the condensing steam alone, and there is no contribution whatsoever from the cooling water stream. The amount of water leaving the condenser is much smaller than is the case with the contact condenser (which is the whole point of the surface condenser concept), and the accumulation of boric acid and ammonia in the cooling water has no effect whatsoever upon the partition of H_2S (or anything else) between the exiting water and gas streams. In the last section we examined what determines how much H_2S is absorbed by the cooling water in a contact condenser, thereby ultimately allowing it to be released to the atmosphere from the cooling tower. Now we must ask how much H_2S condenses along with the water vapor and is ultimately conveyed to the cooling tower.

It is clear that simple solution unaccompanied by chemical reaction cannot be very important because of the rather small volume of condensate involved. Clearly, simultaneous solution with ammonia accompanied by acid-base reaction will be responsible for most of the H_2S present in the condensate.

$$H_2S(g) + NH_3(g) \rightarrow HS^- + NH_4^+$$

However, CO_2 is also present in the steam, and, since it is a somewhat stronger acid than is H_2S, it can be expected to displace ionized H_2S to some extent, therby effectively reducing its solubility.

$$CO_2(g) + H_2O + HS^- \rightarrow HCO_3^- + H_2S(g) \qquad (7.1)$$

A functional equivalent of this displacement is the acid-base reaction of CO_2 and ammonia

$$CO_2(g) + H_2O + NH_3(g) \rightarrow HCO_3^- + NH_4^+ \qquad (7.2)$$

which reduces the amount of ammonia available to react with the H_2S. If HCl is present in the steam (as it is at Castle Rock Springs) it too will displace H_2S from solution:

$$HCl(aq) + HS^- \rightarrow Cl^- + H_2S(g)$$

As HCl is a far more powerful acid than H_2S and much more water soluble too, this reaction will proceed until all of the HCl is consumed. In effect, each mole of HCl effectively negates the effects of a mole of ammonia.

These simple considerations suggest that a surface condenser should be quite effective in keeping H_2S out of the cooling water if typical CO_2 rich Geysers steam is used, but would probably do much worse with the low CO_2 steam of Castle Rock Springs. (The amount of HCl isn't really great enough to change things much in the latter case.)

However, things aren't this simple. First of all, the foregoing arguments implicitly assume that no refluxing of any sort occurs within the condenser; in other words, that any given parcel of steam condenses to produce parcels of condensate and gas which never come into contact with any other parcels of steam, condensate, or gas before they leave the condenser. This is the so-called <u>plug flow reactor</u> approximation and it is clearly invalid in this case. Probably the most important refluxing action in the surface condenser is that caused by the <u>reheating hotwell</u> feature that the condensers of Units 13, 14 and 15 will have. The condenser supplier describes it thus:

> "The hotwell is designed to reheat the condensate essentially to the saturation temperature corresponding to the condenser steam inlet

pressure. This is done by breaking up the condensate thereby exposing a maximum of surface for reheating. Hot steam from the turbine exhaust flows down the ducts on either side of the tube bundle and passes through the falling condensate, fully reheating the condensate and liberating any remaining gases which might be dissolved in the condensate. The hotwell is vented directly back to the tube bundle near the air cooler, permitting gases and excess steam to escape and assuring a continuous flow of steam through the falling condensate."

(Ingersoll-Rand, no date)

The basic idea here is to strip as much of the dissolved gases as possible from the condensate before it leaves the condenser by contacting it with a major portion of the incoming steam flow. This reheating hotwell arrangement should effect a considerable reduction in the amounts of H_2S and ammonia leaving the condenser dissolved in the condensate. However, its effectiveness in this respect will be self-limiting to some extent because the stripped off gases will end up in the newly entering steam, thereby effectively increasing its H_2S and ammonia content. Also, it must be remembered that the reheating hotwell was really designed to remove dissolved air from the condensate rather than far, far more soluble gases like ammonia and H_2S.

Something that complicates the evaluation of the H_2S abatement performance of the surface condensers even more is the fact that reactions of the type (7.1 and 7.2), which involve the conversion of CO_2 to HCO_3^-, are rather slow. (Kern, 1960, Pinsent _et al._, 1956. Related chemical properties of CO_2 are discussed by Roughton, 1941, Sirs, 1958 and Harned and Davis, 1943.) There are two paths by which CO_2 can react to give HCO_3^- and, thereby, consume OH^- and lower the pH. In near neutral solutions the intermediate formation of carbonic acid is rate determining:

$$CO_2 + H_2O \xrightarrow{k_u} H_2CO_3 \quad k_u(53.5°C) = 0.12 \text{ sec}^{-1} \tag{7.3}$$

This is followed by the unmeasurably fast neutralization reaction proper

$$H_2CO_3 + OH^- \rightarrow HCO_3^- + H_2O$$

In basic solution direct reaction with hydroxide is more important:

$$CO_2 + OH^- \xrightarrow{k''} HCO_3^- \quad k''(53.5°C) = 59{,}000 \text{ liter/moles-sec} \qquad (7.4)$$

(53.5°C is the saturation temperature corresponding to Unit 13's design backpressure.)

The rate of reaction (7.4) depends strongly on pH because (7.4) involves hydroxide ion; it increases by a factor of ten for each increase of one pH unit. The rate of (7.3) is independent of pH. The two rates are equal at about pH 7.5, at which value and 53.5°C the half-life of dissolved CO_2 (under conditions of gross disequilibrium) is about 3 seconds. At lower pH's the half-life increases to a limiting value of 6 seconds at pH's lower than about 6.5, at which the rate of (7.4) is negligibly small. At higher pH's the half-life decreases rapidly because of the rapid increase in the rate of (7.4); at pH 7.8 it is about 2 seconds, and at pH 8.1, about 1.2 seconds. Both reactions are, of course, slower and the half lives correspondingly longer at lower temperatures. 53.5°C is well above the maximum temperature expected in condensers of Units 14 and 15. Therefore, these half-lives are really minimum estimates of what they will really be in practice.

The importance of these measurably long half-lives is that they are about as long as it probably takes for the condensate to pour from the heat exchange tubes down to the hotwell at the bottom of the condenser. Once the condensate arrives in the hotwell and is exposed to the powerful stripping action of the relatively clean steam flow there, the remaining unreacted CO_2 will be removed and the displacement of HS^- will cease. The rough equality of the decay and residence time scales means that the total amount of CO_2 which will be able to react before the unreacted CO_2 is stripped off will be of the same order as the amount of CO_2 that can dissolve in the condensate via simple (unreacted) solution. (This is because the reaction isn't fast enough for very much dissolved CO_2 to react

and "make room" for more to dissolve and become available for reaction before the reaction is terminated.) Since CO_2 is less than half as soluble as H_2S and only about 1/100th as soluble as ammonia at these temperatures, this means that the total amount of CO_2 which will ultimately react will probably be considerably smaller than the amount needed to displace most of the HS^-. In other words, the CO_2 will hardly have any effect, and, if the surface condensor design as it stands succeeds in abating H_2S emissions, it will do so largely because of the reheating hotwell feature. This is particularly true of Unit 13 whose steam contains relatively little CO_2.

Unfortunately, a quantitative estimate of the abatement efficacy of the surface condenser design in the presence of ammonia would entail a major computational effort well beyond the intended scope of this project. On the other hand, it seems essentially certain that if there is no ammonia present in the steam, the surface condenser design should approach 100% abatement. (The basis for this conclusion will be discussed in the following Section.)

S11.8 A nonchemical means of H_2S partition control

Besides the obvious dependence on direct solubility and ammonia content, the partition of the H_2S between off-gas and cooling water depends on the ratio of the volumes of these two phases at the point at which they separate within the condenser.

As it happens, this ratio is easily controlled with either kind of condenser, although by different means. For thermodynamic reasons, the contact condensers have a so-called counterflow configuration. The steam entering the condenser first meets the warm water on its way out. Some

of it condenses, and the rest moves up to meet intermediate temperature water midway through the condenser where some more condenses. Finally, it meets the cool water just entering the condenser and most of the remainder condenses. What finally remains, and is removed by the gas ejectors, is mostly (over half) gas with not very much associated steam, because its temperature is quite low. (It approaches that of the incoming water, at which the vapor pressure of water is considerably less than the total pressure of the exiting gases.) The obvious way to increase the ratio of gas to condensate volume is to let more gas into the condenser. The simplest and most innocuous way to do this is to simply let air bleed into the condenser. This has been tried, and it works quite well although, of course, it is useless in the absence of off-gas treament facilities. It requires no modifications whatsoever to implement as the gas ejections are designed to handle rather more gas (1% by weight) than is actually present in the steam. Increasing gas ejector capacity without bleeding air into the condenser probably wouldn't work because of the condenser's efficacy in "scrubbing" water vapor from the off-gas stream. However, a larger gas ejector capacity would certainly allow more air to be bled in than a smaller one would.

The case with surface condensers is somewhat different. Here the temperature of the gases removed from the condenser is higher and they contain a correspondingly larger fraction of water vapor. Also, at least part of the steam flowing through the reheating hotwell takes a shortcut to the gas ejectors which involves passage through the final (air cooler) tube bundle alone. The purpose of this is to intentionally reduce the fraction of this relatively small steam flow which is condensed so that its gas content does not end up in the liquid phase again. This further increases the fraction of water vapor in the off-gas stream. The large fraction of

water vapor in the surface condenser off-gas means that the volume of gas and water vapor removed doesn't really depend very much on the amount of gas entering the condenser. Rather, the off-gas draws off as much steam-gas mixture as it can. This means that the off-gas volume may be most effectively increased by simply installing larger capacity gas ejectors. Simply bleeding air into a surface condenser probably wouldn't have much effect on the ejector flow volume. Units 13, 14 and 15 have, indeed, already been redesigned to increase their gas ejectors' capacities. (Two identical sets of ejectors will be installed in each Unit rather than one as originally planned.)

In the absence of ammonia, simple calculations based on the gas/condensate volume ratio suffice for an approximate estimate of the partition ratio. The simplest approximation begins by assuming that the volume of the off-gas flow is simply that of the incoming gas (in the steam) and air bleed at the turbine backpressure and corresponding saturation temperature. The partition is then simply calculated as that which would be obtained if that volume of gas were equilibrated with the corresponding volume of liquid condensate at the given temperature. Applying this argument to the surface condenser design with 0.4% by weight air bleed (the revised design figure) and assuming that no ammonia is present (pH of the condensate less than 6) gives an estimate for the fraction of H_2S out via gas ejectors (i.e., abatement efficiency) of about 96%. This is actually somewhat conservative because it ignores the beneficial effect of the reheating hotwell, the presence of water vapor in the

off-gas stream, and the fact that the pressure of the gases leaving the condenser is significantly lower than the backpressure. (The latter because of dynamic gas-flow resistance between turbine outlet and gas ejector.) In other words, we believe that in the absence of ammonia these plants would be capable of attaining an H_2S abatement efficiency of better than 96%.

S11.9

This section has been deleted.

S11.10 The burner-scrubber system

The burner-scrubber was mainly intended to destroy the H_2S in the condenser off-gas by burning it. The burner unit mixes the gas with air and burns it. (The H_2S, NH_3, H_2 and CH_4 content is high enough to make the gas moderately flammable.) The burner exhaust gases are contacted with a portion of the cooling water to scrub out the SO_2, and then released to the atmosphere. The high solubility of SO_2 and the presence of ammonia in the cooling water stream insure most of the SO_2 stays in the cooling water until it is reinjected rather than being released from the cooling tower to the atmosphere.

The burner-scrubber on Unit 4 has fallen into disuse, and the idea is quite definitely not being considered for extension to the other Units. Its inability to reduce emissions by more than about half is the main reason for this. Another reason is that the burner-scrubber is a major nuisance to operate. This is due to the marginal flammability of the off-gas, and the pulsating nature of its flow.

Despite its unimpressive practical results, the work on the burner-scrubber is of interest because it has demonstrated in practice the various effects of SO_2 on condenser performance, albeit on the performance of a

contact condenser. For example, during the tests described by Allen and Semprini (1975), operation of the unit lowered the pH of the cooling water (entering the condenser) from 7.8 to 7.1, and reduced the proportion of total incoming H_2S emitted from the cooling tower from 58% to 47%. The latter effect is clearly the result of the lower pH causing a correspondingly larger fraction of the H_2S to leave the condenser with the off-gas stream. In other words, the acid gas SO_2 displaced part of the HS^- from solution. It was also noticed that turning the device on caused the fine white sulfur suspension initially (and normally) present in the cooling water to disappear. This was most probably due to the reaction of SO_2 with the sulfur to give thiosulfate:

$$SO_2 + H_2O + 1/8S_8 \longrightarrow S_2O_3^{=} + 2H^+$$

Also noted during the burner-scrubber tests in December 1975 (Allen and Semprini, 1976) was that about half of the SO_2 in the cooling water had been oxidized to sulfate. It is noteworthy that this was observed during the winter, when the contribution of non-evaporative cooling was sufficiently large to allow a reinjection fraction of about one-third. Under conditions of smaller reinjection volume the mean residence time of the SO_2 in the cooling water cycle would have been longer and, therefore, the fraction oxidized to sulfate probably larger.

The burner-scrubber's design and costs are discussed in considerable detail by Payette, et al. (1974). (This report is, in general, the best available account of PG&E's H_2S abatement work prior to 1974.)

S11.11 pH control by SO_2 injection

An obvious and elegant way to reduce the amount of H_2S leaving the surface condenser cavity dissolved in the condensate is to supply some acid other than CO_2 which is not slow to react in order to displace the HS^-. Realistically, the acid would probably have to be a geothermal by-product for this to be economical. The experience with the burner-scrubber suggests that SO_2 may be appropriate for this application, and the use of SO_2 for pH control has been considered by PG&E if it proves necessary.

SO_2 seems quite adequate for this purpose: its hydration reactions are immeasurably fast, the first dissociation has $pK_a \sim 1.8$ and the second, $pK_a \sim 6.9$. Furthermore, SO_2 is more than ten times as soluble in water (in the un-ionized form) as is H_2S. Together, these properties mean that each mole of SO_2 bled into the condenser should undo the effects of between one and two moles of ammonia, the exact value depending on the pH. Since essentially all of the H_2S would be removed from the condenser with the off-gas under these operating conditions and would be available for SO_2 production, there should be almost exactly the right amount of SO_2 available to deal with the ammonia in the incoming steam. (Recall that the mole ratio of H_2S to NH_3 in the steam is typically between 1:1 and 1:2.)

In order to make this scheme work properly, the SO_2 would have to be introduced into the condenser in a place where it would be able to do its work rather than being immediately pulled away by the gas ejectors or something else of the sort. However, this sort of problem should be readily avoidable by foresight and sensible design.

The SO_2 introduced into the condenser will engage in chemical reactions beyond the simple acid-base ones discussed above. For example, it can be expected to react with any elemental sulfur which may be produced in the cooling water circuit to give thiosulfate. This reaction is clearly desirable in that it would cause some decrease in the rate of cooling tower sludge accumulation, and would reduce the chances of suspended sulfur fouling the condenser. Even more encouraging is the possibility that it might react directly with dissolved H_2S to give thiosulfate:

This reaction has been observed in bench scale experiments on condensate treatment with SO_2 (Payette et al., 1974). In the context of a surface condenser plant this reaction is clearly desirable in that it reduces the amount of H_2S delivered to the cooling water circuit by the condensate. (The SO_2 scheme was abandoned in the context of contact condenser because thiosulfate is impractical to recover from solution and make more SO_2 from. Elemental sulfur was the hoped for product.)

Rather less appealing is the prospect of partial air oxidation to sulfate which was also observed in the course of the burner-scrubber tests. The practical importance of this reaction is that bisulfate (HSO_4^-) is a much stronger acid than bisulfite (HSO_3^-). At the near neutral pH's of interest the former species is fully dissociated, while the latter is only on the order of half dissociated. Therefore, the conversion from SO_2 to sulfate results in the release of more protons (those which are associated with the HSO_3^- that is oxidized), and lowers the pH.

In the case of a contact condenser plant the very large buffering capacity of the ammonia and bicarbonate systems in the condensate keeps this pH decrease (and that due to the dissociation of the SO_2 itself) fairly small. However, the buffering capacity of the surface condenser plant's cooling water will probably be considerably smaller because of the near absence of any form of CO_2. (Recall that essentially all of the CO_2 will go to the gas ejectors in this case.) Ammonia will still be present and reasonably concentrated in the cooling water. Unfortunately, below pH 7 most of the ammonia is already in ionic form (97+%) and its ability to buffer additions of acid correspondingly small. Below pH 6 it would have essentially no buffering capacity at all. Boric acid would likewise have no buffering capacity to speak of at these pH's. In other words, most of the buffering capacity available would be that of the bisulfite ion itself. It is clear that air oxidation of SO_2 to sulfate could cause a catastrophic pH drop down to the 3 to 4 range, once the buffering capacity of the remaining bisulfite was exceeded. Since pH 5.5 is presently considered to be the minimum value consistent with a tolerable rate of corrosion, it is clear that this could prove to be a serious practical objection to the SO_2 injection scheme.

Besides this purely chemical problem, the SO_2 injection rate would probably require close control to keep it well matched with the ammonia content of the steam. This would again be difficult on account of the small buffering capacity present.

S11.12 pH control with H_2SO_4

Converting the SO_2 to sulfuric acid (H_2SO_4) and adding the latter to the condensate (in smaller quantities) would at least eliminate the problem of a further more-or-less uncontrollable pH drop due to SO_2 oxidation in the cooling water circuit. However, H_2SO_4 is most definitely a liquid rather than a gas, which makes it quite unsuitable for simple injection into the condenser. Attempting to inject its anhydride (SO_3) could well cause a major sulfuric acid mist and/or ammonium sulfate problem. (SO_3 is notorious for its propensity to form an extremely hard to scrub mist of H_2SO_4 on contact with water vapor. Some of this mist would undoubtedly end up in the ambient air, a prospect almost as bad as H_2S pollution itself.) A more reasonable way of introducing the H_2SO_4 would be to add it to the condensate just after it leaves the condenser, strip off the liberated H_2S in a counterflow column, and take it to the Stretford unit from there. However, the cumulative complexity of such a system would probably dissuade its adoption.

S11.13 The iron catalyst system

In the presence of air, H_2S dissolved in water at normal temperatures is unstable in respect to oxidation to free sulfur:

$$H_2S + 1/2O_2 \longrightarrow H_2O + 1/8S_8 \qquad (13.1)$$

However, this reaction is ordinarily too slow to have a significant effect upon H_2S emissions from the cooling towers. Fortunately, this reaction may be speeded up by the use of appropriate catalysts. The best of these is dissolved ferric ion (Fe^{+++}), which catalyzes the reaction pathway:

$$2Fe^{+++} + H_2S \longrightarrow 2Fe^{++} + 1/8S_8 + 2H^+$$

$$2Fe^{++} + 1/2O_2 + 2H^+ \longrightarrow 2Fe^{+++} + H_2O$$

The second of these reactions regenerates the ferric ion and enables it to oxidize more H_2S. The net reaction is simply (13.1).

This catalytic oxidation scheme is presently in service at Geysers Unit 11 (Allen et al., 1975). Iron concentrations in the cooling water are maintained at 30ppmw or higher (mostly in the form of ferric hydroxide – $Fe(OH)_3$ – suspension) and the condenser off-gas is released into the bottom of the cooling tower which allows its H_2S content to be oxidized too. Under these conditions only 6 to 8% of the H_2S coming to the plant with the steam is released.

The original source of iron was "Ferrifloc", which is the residue of sulfuric acid steel pickling and contains a large fraction of ferric sulfate ($Fe_2(SO_4)_3$). Ferrifloc is a dusty powder which comes in paper sacks. These sacks were broken by a bag-breaker and the Ferrifloc mixed with water in a large stirred mixer to form a slurry which was then piped to the cooling water circuit. Unfortunately, these various contraptions proved to be such a maintenance headache that Ferrifloc had to be abandoned as an iron source. Now a solution of ferric sulfate hauled in in liquid form is employed as the source of iron. This system will also be used at Unit 12 when it is completed, and at Units 3 to 6 when they are retrofitted.

Despite its good performance in abating H_2S emissions, the iron catalyst system has two drawbacks which stimulated the search for an alternative which has resulted in the surface condenser scheme. The more

serious of these is that the dissolved iron salts in the cooling water greatly increase the rate of corrosion of metals exposed to it. The reason is that ferric ion attacks metal surfaces through reactions like:

$$2Fe^{+3} + Fe \longrightarrow 3Fe^{+2}$$

This problem is so severe that iron based alloys are completely unusable in the presence of ferric ion. The problem is less severe with non-ferrous metals, but still severe enough to preclude the use of aluminum or copper based alloys and some stainless steels. Dodd and Ham (1974) have concluded that metal parts which will be in contact with the cooling water of an iron catalyst plant should not be made of anything except type 316,316L or 17-4PH stainless steels, and this has been adhered to in the design of Units 11 and 12. It is believed that this choice of materials will reduce the corrosion problems in these plants to manageable proportions, but increased maintenance costs are still anticipated. In the case of the Units which are being retrofitted it is, of course, too late to change the materials of construction, but the benefits of eliminating their H_2S emissions have been judged to outweigh the costs of increased maintenance.

The other problem is that of sludge accumulation. This sludge consists of the free sulfur produced by the catalytic oxidation and of the ferric hydroxide itself. The chief problem with it is that it is 90% water by weight. This means that the accumulation is so rapid that it must constantly be removed from the cooling tower basin and hauled away. This is accomplished by keeping the sludge stirred up and taking water out of the cooling tower basin for filtration through a sand filter,

after which it is returned to the plant. Every few hours the sandfilter is backwashed, which process removes the sludge from the filter and transfers it to a settling tank. Some water is decanted from the settling tank back into the system, and the sludge is hauled away in tank trucks.

Catalytic oxidation by copper and nickel have also been experimented with, and both have proved to be even more effective than iron (Payette et al., 1974). However, both are rather more expensive than iron, and copper plates out on the exposed metal surfaces making it impossible to maintain a sufficient concentration at a reasonable cost. Nickel works in concentrations as low as 1 or 2ppmw, but produces sulfur in the form of a fine colloid which accumulates in various crannies in the plumbing and causes it to plug up. However, the excellent abatement performance of nickel suggests that the idea might be worth pursuing further. For example, the addition of SO_2 (made by burning sulfur from surface condenser/ Stretford unit equipped plants, perhaps) might eliminate the problem by converting the sulfur to thiosulfate. It may also be possible to stabilize the sulfur suspension or else to precipitate the sulfur in a controllable manner by the use of surfactants. The corrosiveness of nickel bearing cooling water is presently being investigated by PG&E.

S11.14 <u>Condensate treatment with hydrogen peroxide</u>

Although there are many ways known to destroy H_2S dissolved in water, most are immediately excluded from consideration as a primary means of H_2S abatement on account of their need for externally supplied chemicals.

However, the chemical supply constraints are considerably weaker if the chemical treatment is to be used only as a secondary line of defense. Workers at the FMC Corporation of Philadelphia (a major H_2O_2 producer) have found that hydrogen peroxide (H_2O_2) can essentially completely destroy H_2S dissolved in water in less than 15 seconds if 1ppmw of iron is present to catalyze the reaction. 1ppmw of iron is sufficiently low for corrosion and sludging problems to not arise. Oxidation by externally supplied H_2O_2 is presently favored as a second line measure, should surface condenser condensate prove to contain unacceptable amounts of H_2S (G.W. Allen, private communication).

The amount of H_2O_2 required depends on the products of the reaction which, in turn, depend upon the pH. Below about pH 6.7 the predominant reaction is:

$$H_2S + H_2O_2 \longrightarrow 2H_2O + 1/8S_8$$

which requires exactly 1 kg of H_2O_2 per kg of H_2S. Above about pH 8 the major product is sulfate:

$$H_2S + 4H_2O_2 \longrightarrow H_2SO_4 + 4H_2O$$

which requires 4 kg of H_2O_2/kg H_2S. Between pH 6.7 and pH 8 free sulfur, sulfate and thiosulfate are all formed, and an intermediate amount of H_2O_2 is consumed. It is clear that oxidation to sulfate will rapidly lower the pH and thereby cause a change in mechanism which will reduce the H_2O_2 requirements of further oxidation. If the H_2S is present in the form of ammonium bisulfide (as would be the case in the surface condenser application) the pH drop will be limited by the fact that the oxidation to free sulfur will release free ammonia. It seems likely that the pH will either remain in or change to near neutral, mixed product values. In practice, this

means that the H_2O_2 consumption will be somewhere between 1 and 4 kg/kg H_2S. Since H_2O_2 currently costs about $1.27/kg (in the form of 50% solution delivered in drums), this corresponds to between $1.27 to $5.07/kg H_2S. Cost reduction through pH control doesn't really make much sense in this context, since one might as well employ pH control to keep the H_2S out of the condensate in the first place and not bother with H_2O_2 at all.

Actually, there is an electrolytic process for making H_2O_2 which was once the predominant one for many years. The power consumption of this process is about 15kwh/kg H_2O_2 (Thorpe's Dictionary, 1943, Vol. VI, p. 342). This is low enough to seriously consider electrolytic H_2O_2 as a primary means of H_2S abatement in the absence of ammonia. However, the mildly alkaline and well buffered Geysers contact condenser condensate would probably require too much H_2O_2 for this approach to be practical. Since the surface condenser scheme would work very well in the absence of ammonia, it is highly likely that it would be chosen over H_2O_2 oxidation even in this case.

§11.15 Destruction of separated H_2S

The whole purpose of the steam convertor and surface condenser designs is to separate the H_2S from the main steam flow or the cooling water flow, respectively. Once separated, this H_2S must be disposed of somehow. The H_2S separated by either device comes off in fairly concentrated form: a gas which consists mostly of CO_2 and water vapor and contains a few percent of H_2S. This fact makes the task of destroying it rather easier than is the case when it is dissolved in the condensate.

The only major constraint on choice of method is that externally supplied chemicals cannot be used except as catalysts. Consequently, air oxidation of some sort is again preferred. Fortunately, the task of removing a few percent of H_2S from a gas stream is a common one in fuel gas purification and petroleum refinery pollution control applications, and the necessary techniques are well developed.

The most promising H_2S disposal process appears to be the so-called Stretford process which has been widely employed in the United Kingdom and Germany for some years for H_2S removal from synthetic gas (Miller and Robuck, 1972). It will be employed with Geysers Units 13, 14 and 15 to remove the H_2S from their condenser off-gas streams prior to venting them to the atmosphere. These units have been designed and will be installed by the Ralph M. Parsons Co. of Pasadena (Ralph M. Parsons Co., 1975).

The Stretford process is a catalyzed air oxidation process which converts H_2S to free sulfur. The sulfur may be purified to commercial quality and this will probably be done at the Geysers with the intention of selling it. The reaction takes place in an aqueous solution in which the various catalysts are dissolved. This solution is contacted with the gas to be cleaned in a counterflow tower. Because the pH of the solution is maintained at about 8.8 by addition of sodium carbonate (Na_2CO_3) as needed, the H_2S dissolves as the ion:

$$H_2S + CO_3^{=} \longrightarrow HS^- + HCO_3^-$$

This scrubbing is guaranteed to reduce the H_2S content of the gas stream to 10ppmv or less, which corresponds to a scrubbing efficiency well above 99%. The HS^- is then oxidized to sulfur by the reaction:

$$2HS^- + 4VO_3^- + 4HCO_3^- \longrightarrow 1/4S_8 + V_4O_9^= + 4CO_3^= + 3H_2O$$

The VO_3^- is then regenerated by reaction with dissolved oxygen;

$$V_4O_9^= + O_2 + H_2O + 2CO_3^= \longrightarrow 4VO_3^- + 2HCO_3^-$$

This reaction is itself catalyzed by 2, 7-anthroquinone disulfonic acid (ADA), which is a complicated organic compound with the structure;

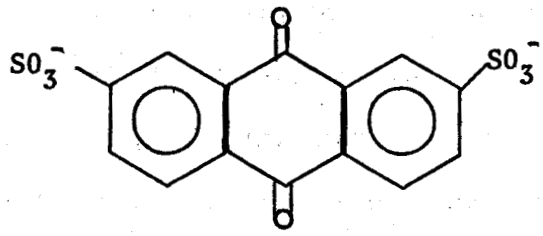

(in its oxidized form in basic solution). The dissolved oxygen is replenished and the sulfur removed by bubbling air through the solution in another vessel. The sulfur accumulates at the top of this vessel as a froth, and is skimmed off and transferred to yet another vessel where it is dried and purified by melting it.

The only effluent which the Stretford plant itself produces is a small stream of the solution itself which must constantly be slowly removed and replaced by fresh solution because of the slow buildup of undesirable by-products, such as sulfate and thiosulfate. This purged solution will be held in a storage tank and removed by tanker trucks at the rate of about one haul per Unit per month. Disposal by reinjection with the excess condensate is also under consideration. As far as is known, the Stretford plant will cause no significant environmental impacts. All indications are that the Stretford units will work well.

Another application for H_2S destruction units is the removal of H_2S from the off-gas of the contact condenser equipped Units. This is, of course, what the burner-scrubber was intended to do. More recently, Union Oil has proposed a solid catalyst air oxidation process to SO_2 which seems to be a reasonable substitute for the troublesome burner portion of the burner-scrubber. This scheme has already been worked up as a design (Ralph M. Parson Co., 1976), but is not presently being considered for use by PG&E.

S11.16 H_2S abatement of preplant steam releases

Successful removal of H_2S from raw geothermal steam at the Geysers has been demonstrated by Castranta et al., (1976). This was accomplished by injecting dilute solutions of sodium hydroxide (NaOH) and hydrogen peroxide (H_2O_2) into the steam flow. The NaOH pulls the H_2S into solution by the reaction:

$$OH^-(aq) + H_2S(g) \rightarrow H_2O + HS^-(aq)$$

and the H_2O_2 oxidizes the H_2S to sulfate. The final product of the reaction is an aqueous solution of sodium sulfate, with some carbonate and unreacted NaOH and H_2O_2 probably also present. Most of this effluent solution was successfully separated from the treated steam before the latter was released to the atmosphere.

H_2O_2/H_2S and $NaOH/H_2S$ weight ratios of 4 to 1 and 2.8 to 1, respectively, resulted in 91% H_2S removal. At the estimated prices of these chemicals (delivered in bulk to the Geysers) of \$1.268/kg and \$0.375/kg, these ratios give an approximate chemical cost of \$6.73/kg H_2S removed.

More H_2O_2 and NaOH gave even better H_2S removal, but at a considerably higher cost.

This price is clearly too high to seriously consider H_2O_2 oxidation for routine preplant removal of H_2S. However, it appears to be tolerable if only the relatively small drilling and pre-plant steam stacking emissions are to be treated.

S11.17 Summary

"Closed" systems based on the surface condenser, steam convertor, or binary cycles would have no routine emissions at all. However, they all require dry cooling or an external supply of water and this severely restricts their practical utility. Among such closed systems, the one based on the surface condenser is most attractive thermodynamically except with hot water below about 200°C in which case the binary system would probably do better.

The iron hydroxide abatement system has been demonstrated to be effective, but causes such maintenance and waste disposal problems that it can only be considered a last resort to be used when absolutely nothing else is available. Its only future use beyond Units 11 and 12 is expected to be for retrofitting the existing powerplants, as it is cheap and easy to retrofit.

The clear system of choice for new powerplants at this time is the surface condenser/Stretford Unit design of Units 13, 14, and 15. The H_2S abatement performance of these Units is not predictable because of

the ammonia in the steam, and may not be as good as was initially hoped. However, two plausible retrofit schemes are available should they prove necessary. It is essentially certain that H_2O_2 treatment of the condensate would essentially completely clean up these plants, although perhaps at a greater cost than one would wish if a substantial fraction of the H_2S goes into the condensate. H_2O_2 treatment does, however, have the advantage of requiring an absolute minimum of plant modifications and capital investment which means that it could probably be put into service within weeks if necessary. The ability to essentially eliminate routine H_2S emissions also recommends it for use in populated areas or under bad meteorological conditions regardless of how well the surface condenser may do. Injection of SO_2 into the condenser for pH control would certainly be cheaper, but may prove to cause corrosion problems which makes its overall utility uncertain at this time. Both H_2O_2 and SO_2 treatments have the definite advantage that they can be turned on and off as needed; for example, they could be used only when meteorological conditions warrant.

NaOH-H_2O_2 scrubbing is a viable approach to 90% or better abatement of preplant H_2S emissions although, again, at some cost.

All in all, essentially completely H_2S emission free condensate cooled geothermal development appears to be technologically feasible at this time. How close future developments come to this zero emission ideal will be determined by economic and regulatory factors rather than by the availability of technology. The H_2S control technology

which has been developed at the Geysers should prove applicable to hot water based geothermal development as well. Of course, this is not to say that future improvements in the direction of lower cost and greater reliability will not be forthcoming; however, matters have reached the point that these questions need no longer concern the people downwind.

PG&E's experience with the H_2S problem at the Geysers should serve as a lesson to everyone else involved in dealing with geothermal chemical problems, be they H_2S abatement related, corrosion related, or brine chemistry.

Perhaps the greatest lesson to be learned from PG&E's experience at the Geysers is that environmental impact control has got to be considered <u>before</u> the powerplant is built. Once built with no regard to these matters, a powerplant is difficult to retrofit properly. Furthermore, the abatement system should be designed at the same time that the power cycle itself is being designed rather than being considered an add-on. A case in point is the surface condenser which is, by its very nature, an integral part of the power cycle. As such, its adoption was possible only after PG&E staff broke away from their previous habit of optimizing the power cycle first with no regard for H_2S emissions and then, finally, considering the H_2S emission behavior of the result.

The second lesson is that a geothermal powerplant has <u>chemical</u> behavioral characteristics on top of the usual thermodynamic ones common to all powerplants. These chemical characteristics are as important in determining the emissions from the plant as the thermodynamic ones, if not more. Clearly, abatement work must be based upon a clear and funda-

mental understanding of these characteristics if its results are to be predictable and successful. This understanding must be as holistic as the understanding of the power cycle is. In other words, simply sticking a pH meter electrode into the cooling tower basin won't do — you have to know what determined the value of the pH if you hope to predict its value after you modify the powerplant, or build a new one with a different design. A minimum goal would be to be able to theoretically predict the chemical balance and pH's of the cooling water system of a powerplant.

The third lesson is that geothermal powerplants have a pronounced tendency to sprout various sorts of chemical gadgetry intended to control their chemical behavior. On the one hand, this is simply something that everyone will have to learn to live with. On the other hand, with too many gadgets in the design, the thing is likely to become a chronic nuisance with recurrent control and maintenance problems. Because of this practical consideration, overly imaginative designs (those involving sulfuric acid plants, hauling in tank cars of liquid chlorine, and the like) are likely to be as popular with the utilities as high level waste. This should <u>always</u> be remembered by anyone involved in geothermal powerplant design.

CHAPTER TWELVE - HOT WATER BASED GEOTHERMAL DEVELOPMENT

S12.1 Hot water in Lake County?

Vapor producing geothermal reservoirs of the sort that exist at the Geysers and at Castle Rock Springs are rare; the only other ones presently known to exist within the United States are in Yellowstone and Lassen National Parks. Given how much more common liquid dominated (and producing) reservoirs are, it would be foolish to assume that steam and only steam producing reservoirs will be found throughout Lake County. In fact, the (nearly) general consensus seems to be that only liquid dominated reservoirs will be found east of Highway 175. In other words, most people believe that the vapor producing reservoirs of Lake and Sonoma Counties are very special products of the unusual geology of the Macayamas Range.

As it happens, hot spring water which is formed by the condensation of underground steam contains very little chloride; always less than 20 ppmw (parts per million by weight) and usually less than 10 ppmw (White, et al., 1971). In contrast to this, the waters of liquid dominated reservoirs and the hot springs fed by them contain much higher concentrations of chloride. This and similar considerations support the conclusion that most or all geothermal strikes east of Highway 175 will be of the hot water type. (See, for example, White, et al., 1973, McColl, et al., 1976, tables A and B of Garrison, 1972, and Renner, et al., 1975.)

S12.2 Hot water geothermal technologies

The simplest way to generate electric power from hot water is to partially decompress the water when it reaches the surface, thereby causing part of it to turn to steam, separate the resulting steam from the flash residue and utilize it in a powerplant just like the ones

presently used at the Geysers. This so called single flash system is presently employed at Cerro Prieto (Mexico). Even more steam and, therefore, electrical energy, may be gotten from the flash residue exiting the first separation step by flashing it again at an even lower pressure. The use of two input steam flows at two different pressures means that the powerplant proper must be equipped with at least two turbines of different design but, except for this one detail, it is of the same sort as powerplants which utilize natural steam; in particular, the condenser and cooling towers can be made exactly the same. The design of the Wairakei (New Zealand) powerplant is based on this double flash principal. A double flash plant configuration seems likeliest to be employed if hot water with a temperature above about 200°C is found in Lake County.

At water temperatures below about 200°C a so-called binary system proves to have a thermodynamic efficiency even better than that of the double flash system. A binary system does not involve steam. Rather, the heat content of the hot water is transferred to some low boiling-point fluid like isobutane or Freon by means of a counter-current surface heat exchanger thereby causing it to boil. The vapor thus produced is sent through a turbine, condensed in a surface condenser at the other end, and pumped back to the heat exchanger. This system is intrinsically a completely closed one which would have zero routine emissions. Though zero routine emissions is certainly to this system's credit, it is an advantage which must be paid for by supplying cooling water from an external source, as there is no condensate available for this purpose. We shall see that this "String" renders the supposed environmental superiority of the binary system more apparent than real, thereby making the binary cycle the system of choice only with hot water below 200°C.

Quite aside from thermodynamics, the binary system presents two technical problems which are less pronounced or absent in the case of flash steam systems. The first is that of scaling. Since a binary system cools the water down to about 50°C, a greater amount of dissolved solids can be expected to precipitate out within the powerplant. Unfortunately, much of this scaling will occur in the heat exchangers which are particularly vulnerable to it. The second is that the binary system is really practical only when a single liquid phase is delivered to it. Attempting to use a two phase mixture in a binary system would cause a drop in thermodynamic efficiency (relative to the hotter single phase that the mixture was derived from) and greatly aggravated carbonate scaling problems (due to the loss of gaseous CO_2 from the liquid phase). The necessity of avoiding a two phase flow means that the wells supplying a binary cycle plant cannot be self-pumping as is the case at Wairakei and Cerro Prieto, except in the unlikely circumstance that the well in question is Artesian and remains that way throughout its productive life. Rather, the water must be pumped up and out of the well by means of a down-hole pump. The fact is that there is, as yet, no practical down-hole pump design available.

Thermodynamically preferable to both double flash and binary cycles regardless of the temperature of the incoming water is the so-called total flow device which would actually run on a two phase mixture. It may be thought of as a many flash stage flash steam system in which the flashing takes place inside the turbine (or other equivalent fluid expansion device) and the two phases are never separated. Its thermodynamic advantage over the double flash steam system is that each bit of steam produced begins to do work at its initial pressure rather than having its pressure unproductively dropped to one of two turbine inlet pressure. Its

advantage over the binary system is that no temperature degradation occurs on account of heat flow through heat exchange surfaces or heat capacity mismatch. Also, down-hole pumping would not be necessary (though still desirable). The thermodynamic advantages of a total flow concept are so great that, if a truly practical device of this type was developed, it would very likely quickly and permanently displace flash and binary systems. Both industry and ERDA are actively pursuing the idea, but, unfortunately, success does not yet seem to be at hand.

The environmental characteristics of a commercial total flow system would be roughly the same as those of a flash steam system. The reason is that the steam and water phases would be separated upon exiting the total flow device, and the steam would have to be condensed in order to maintain a reasonably low backpressure. The condenser could be of either the contact or surface type.

S12.3 H_2S emissions from hot water geothermal plants

We refer the reader's attention back to Table 8.7. It is instructive that the dirtiest geothermal development (Cerro Prieto) and the cleanest one (Wairakei) are both hot water developments. The Geysers and Lardarello (the only other natural steam developments fall in between. This shows that it is impossible to generalize about the relative environmental merits of the two types of resource. It just so happens that Cerro Prieto water is rather high in H_2S and Wairakei water is rather low in H_2S. Likewise, Lardarello steam contains more H_2S than does Geysers steam.

Choice of technology has an equally powerful effect upon H_2S emissions. Geysers Unit 11 is the only H_2S abated powerplant included in Table 8.7. Although its steam is at least as dirty as the average of that going to

Units 1-10 and despite Unit 11's reliability problems (which have been taken into account) its emissions per kilowatt hour are lower by nearly a factor of three than the average of those of Units 1-10.

Unit 11's overall abatement efficiency of about 70% is important in that it has been concretely demonstrated and represents something that we can fall back on. In particular, the iron hydroxide system should work just as well with flash steam as it works with natural steam.

Likewise, the surface condenser design is equally applicable to flash steam systems. Again, its performance will be largely determined by the amount of ammonia present in the steam. It so happens that the Geysers development is the only one which has significant concentrations of ammonia in its steam. This unhappy circumstance seems to be due to the fact that the Geysers is a vapor dominated reservoir in which small pockets of water containing dissolved ammonia may actually boil dry, thereby delivering the ammonia to the steam phase. Under the much milder conditions in the flash steam separator of a hot water based plant by far the better part of the ammonia will stay with the residual brine. Therefore, the surface condenser abatement system should work quite well with flash steam. The only circumstance under which there is any chance at all of a significant amount of ammonia showing up in flash steam is if there is a huge amount of it dissolved in the brine to begin with. Actually, this seems likely to prove to be the case in the Borax Lake - Sulfur Bank area where hot spring waters are known to be extraordinarily high in ammonium salts. The possibility of using a closed system plant to completely eliminate routine H_2S emissions from a hot water based development is subject to exactly the same cooling water supply restriction that is encountered at the Geysers (cf. S7.7).

All in all, the task of controlling H_2S emissions from flash steam cycle plants does not appear to be any different from the task of controlling H_2S emissions from the natural steam plants at the Geysers, and the technology should prove transferrable.

S12.4 Problems of water supply and disposal

Table 12.1 compares the heat and water flows through three different kinds of geothermal power plant. The water flows are given in terms of hectare-meters per 100MW-years and thus represent a full year's flow through a geothermal plant of typical size. To better appreciate these figures, please remember that 1 hectare-meter = 8.11 acre-feet!

Of particular importance is the volume of cooling water consumed. In the case of the natural and flash steam cycles, this is the amount of water that would have to be supplied in order to completely eliminate routine emissions. In the case of the binary cycle plant, there is no choice; this is the amount of water that has to be supplied, period. It seems that the cooling water needs of one or two such plants could probably be squeezed into Lake County's water budget, but larger scale development of this sort probably would not be possible unless water exports were reduced. Note also that the binary cycle plant would require nearly twice as much cooling water as the other two. To be sure, a flash steam plant operating on 160°C brine would do even worse, but a binary cycle plant operating on 210°C brine would do no better. This is why binary cycle plants are hugely impractical above about 200°C.

Even more immense are the volumes of brines which the two brine based systems would have flowing through them. It is precisely these huge numbers which have caused the development of hot water based geothermal energy

to lag so far behind steam! First of all, these geothermal waters are invariably poisoned by substances like arsenic, boron, mercury and ammonia. Table 12.2 presents the chemical compositions of a variety of geothermal fluids. It is quite obvious that none of these fluids could be disposed of in the quantities involved by any means other than reinjection (or, perhaps, dumping into the ocean) without causing grave environmental damage. (The Wairakei analysis in the table looks reasonably innocuous, but this is only because arsenic was not reported; other data indicate 2 or 3 ppmw.)

It is precisely surface disposal of residual brine that causes the major environmental impacts at Wairakei and Cerro Prieto. At Wairakei the flash residue is simply dumped in the Waikato River, which is a fairly large river with an annual average flow rate of 127 cubic meters per second. The result has been that the water is unsafe to drink during low flow periods because of the arsenic in it, and that a downstream reservoir has developed a chronic water plant clogging nuisance (Axtmann, 1975a). At Cerro Prieto it is simply dumped into an evaporation pond with an area of 16 square kilometers (Mercado, 1975). Obviously, no such surface disposal scheme would be acceptable in Lake County. In particular, if water with a chemical composition similar to that of the Sulfur Bank Mine specimen in the table is found at Borax Lake (which is just across a ridge from Sulfur Bank Mine), there is no question at all that even small releases into the environment will have to be carefully avoided on account of the extremely high boron and ammonia content.

The only acceptable alternative is to reinject the residual brine into the reservoir. So far the feasibility of routine reinjection has been demonstrated only at two small hot water based developments in Japan and

El Salvador, and it seems premature to predict success in all other places and circumstances. To be sure, the excess condensate at the Geysers is routinely reinjected with no problems, but this really proves nothing, as the volumes involved here are much smaller, the condensate doesn't contain any silica or carbonate minerals which could clog up the formation, and the vapor dominated reservoir has certain very special physical characteristics which make reinjection almost trivially easy. Nonetheless, it is clear that hot water development without reinjection would be completely intolerable environmentally.

S 12.5 Subsidence and groundwater problems

Subsidence is simply the drop in ground level which occasionally occurs when large amounts of water are withdrawn from an underground aquifer. The withdrawal of geothermal brine isn't really any different from the removal of ordinary ground water in this respect. It is clear that hot water development without reinjection could cause gross subsidence and, indeed, subsidence with a maximum displacement of 3 meters has been reported over an area of about 75 square kilometers around Wairakei (Hatton, 1970). Reinjection would certainly reduce this problem but probably not eliminate it completely because the redistribution of large volumes of water underground could still cause a "sump here and a bump there" sort of change in the land contour. About all that can be said on this subject given the present lack of information is that the Franciscan formation (in which most of Lake County's usable geothermal resource is likely to be found) is a geological environment in which subsidence is not likely to be very large.

A related potential problem is that of depletion or disruption of groundwater aquifers adjacent to a geothermal reservoir. For example, it is possible to imagine an ordinary body of cool groundwater overlying and floating on top of a hot high salinity brine. Left alone, the system is stable because the salts dissolved in the brine make it heavier than the fresh water above despite its higher temperature. However, if any brine is withdrawn from the reservoir, the water table will drop and if any brine is reinjected elsewhere an equal volume of brine will be pushed up into the fresh water zone. Fortunately, in Lake County, the possibility of finding brines of high enough salinity for this exact situation to exist seems remote. But once again, we don't really know what the chances of something like this happening really are. All that can be said is that the services of a good hydrologist will most certainly be required! We are happy to report that the Geonomics Company of Berkeley has recently been awarded a contract by the Environmental Protection Agency to consider just this class of problems in Lake County and several other geothermal areas.

S12.6 Environmental impacts of non-electrical uses of geothermal brines

The most likely such uses will be to supply heat to towns for domestic and commercial use, to processing plants of various sorts for industrial use, and to agriculture (either field or greenhouse) in order to extend the growing season. It seems likely that only waters with temperatures not much above 100°C will prove chemically pure enough for direct use as irrigation, process, or domestic water. The heat content of hotter and, thereby, most likely more saline and chemically polluted waters would have to be transferred to clean water through a heat exchanger. The clean secondary water or steam would then be delivered to the consumer, and the cooled down brine reinjected. Such a system would have no routine chemical releases whatsoever.

We anticipate that the environmental impacts of non-electrical geothermal development will be limited to those associated with drilling, the piping system and related construction, and occasional accidental releases. These are essentially the impacts of geothermal electrical development minus those of the power plant itself, but differ from the latter in scale. Consider, for example, a typical geothermal well which taps a 210°C reservoir and is capable of producing 200 tonnes/h of water and steam. If connected to a double flash cycle power plant, it would enable the generation of about 4.5 MW. If, however, it were used to produce 100°C clean steam for domestic and commercial use, it would be able to supply the full heating or cooling needs (the latter by means of absorption air conditioning) of

Clear Lake Park and Clear Lake Highlands on any day of the year when running at one-half capacity or less. This means that supplying the full heating and cooling needs of these towns need not require the drilling of more than three geothermal wells at Borax Lake: one each for production, reinjection, and standby.

It is easy to see that, whenever there is a choice between the two, direct non-electrical utilization of geothermal heat will have a smaller environmental impact than the production of an equivalent amount of electrical energy will. For example, allowing for transmission losses of one-third, the delivery of 1 kWh of 100°C heat to the consumer as 100°C steam will require the production of about 10 kg of 210°C brine. The production of the same amount of electrical energy (for use in an electric space heater) by a double flash cycle plant would require the production of about 45 kg of 210°C brine. Furthermore, the powerplant would probably emit at least some H_2S which the direct utilization system would not. The reason for this difference is that direct utilization avoids the gross thermodynamic inefficiency which is unavoidable when heat is converted to electrical energy.

We believe that Lake County is optimally suited for non-electrical geothermal development, regardless of how unsuitable certain parts of it may be for electrical development. There is no natural gas service in the county, and all heating is done with electricity or rather expensive bottled gas. Direct use of geothermal heat seems to be the obvious alternative in those areas where towns and geothermal resources are juxtaposed.

Table 12.1

Water and Heat Flows
in Three Geothermal Plant Cycles

	Steam 185°C (Geysers)	Water 210°C (Double Flash)	Water 160°C (Binary)
Thermodynamc Efficiency (%)	15	11	9
Fluid Produced (ha-m/100MW-y)	780	3,900	6,800
Fluid Reinjected (ha-m/100MW-y)	60	3,200	6,800
Residual Brine (ha-m/100MW-y)	0	3,100	6,800
Cooling Water Consumed (ha-m/100MW-y)	720	760	1,310
Heat In/Electrical Energy Out	6.5	9.1	11.0
Heat Rejected/Electrical Energy Out	5.5	5.8	10.0
Heat in Flash Residue/Electrical Energy Out	0	2.3	0

Enthalpies relative to liquid water at 40°C.

ha-m = hectare-meter meant in the sense of 10^7 kilograms of water; i.e., the water and steam flows are given in terms of their volumes as liquid water at about room temperature.

Steam and double flash cycles assumed to be condensate cooled, and full cooling load assumed borne by evaporation. (This slightly overstates the cooling water needs, and slightly understates the reinjection volumes.)

Based on data presented by Nathenson (1975).

TABLE 12.2 - CHEMICAL COMPOSITION OF SELECTED GEOTHERMAL FLUIDS

	CRS. Cond.	CRS. Res. Fluids	Sulfur Bank Mine (Hot Spr.)	Long Valley	Wairakei	Broadlands	Cerro Prieto	Salton Sea
				(ppmw)				
Li			4.4	2.8	12	12	24.4	215
Na	nd	117.0	1190	390	1235	1050	8238	50400
K	nd	86.0	23	45	197	224	2058	17500
Rb				0.48				137
Cs				0.6				16
Mg	0.03	37.0	55	0.1				54
Ca	0.05	10.0	20	0.9			556	28000
Sr			2.2	0.14				609
Ba				nd				235
Mn			0.1	<0.02				1560
Fe	0.2		0.0	0.05				2090
Cu				<0.03				8
Ag				<0.04				0.8
Zn				0.10				790
Hg		0.054		10^{-4}				0.006
Al	?	<0.02	0.6					
Tl								1.5
Sn								0.5
Pb				<0.1				84
As	nd		0.00	2.2		8		12
Sb				0.2				0.4
F	0.09	8.0	1.0	12	9	7.3		15
Cl	10.2	10.0	644	280	2180	1743	16329	155000
Br			1.6	1.1		5.7		120
I			3.2	0.4		0.8		18
B	0.28	24.1	620	15	30	49	17.3	390
Total CO_2	48.9	8.8	2370	346	8(44)	128(748)		>108
Total SiO_2	17.9	400.0	42	340	620	805	1291	400
NH_3	25.6	43.1	438	0.4		2.1		386
NO_2			0.0	<0.05				
NO_3^-	5.4	2.2	0	<0.05				
PO_4				0.18				
Totals* as H_2S	61		12	10	(3.5)	1.0(120)		17-29
SO_4	7.3	414.0	598	130	34	8		5.4
pH	5.1-6.7	5.1	6.8	9.2				

Notes for Table 12.2

The data presented here refer to analyses of water specimens rather than steam or total flow specimens. This is why some geothermal gases like hydrogen and methane are not reported, as they generally go with any vapor or gas phase which is separated from the water. CO_2, H_2S and NH_3, on the other hand, have a large solubility as the corresponding ions at the proper pH values. Therefore, they are reported, but the quantity that actually comes out of the ground is generally understated. This understatement may be anywhere between negligible and severe, depending on the gas, the pH, and the conditions of collection. In the case of NH_3 the error is most probably negligible in most cases, and in the case of CO_2, it is probably significant in most cases. H_2S lies between them in this respect. In the case of the analyses from Wairakei and Broadlands, another value representing the total amount of gas in the total flow (water and separated steam) is also given in parentheses for H_2S and CO_2. The Long Valley and CRS Condensate specimens were also collected in ways which minimize gas losses. On the other hand, the CRS Reservoir Fluid, Sulfur Bank Mine, and Cerro Prieto specimens have most likely suffered extensive gas losses and their reported gas contents are not to be trusted. Magnitudes of gas losses from Salton Sea specimens are uncertain. Some water is also boiled off with the gases when geothermal fluids are brought to the surface. This results in a spurious increase in the concentrations of dissolved solids. The CRS Reservoir Fluid and Cerro Prieto specimens have probably lost considerable water this way. The CRS Condensate, Sulfur Bank Mine, and Long Valley specimens were collected under circumstances which minimized the water loss. The Wairakei, Broadlands, and Salton Sea analyses have been corrected to compensate for the water loss. In all cases, blanks signify not reported or illegible in report rather than 0.

In some cases, concentrations have been recalculated in order to make the species reported consistent among the various specimens.

CRS Cond. = Castle Rock Springs Condensate. From the Castle Rock Springs Geothermal Field near Anderson Springs, Lake County, California. Data courtesy of G. Frye of Aminoil, Santa Rosa, California. Average of 12 samples from 10 wells sampled 5/13/75 and 10/2/75. Steam condensed by passage through an ice-water cooled condenser. Comparison with other data

Notes for Table 12.2 (continued)

suggests that essentially all of the incoming water and NH_3 were contained in the condensate, about 85% of the H_2S and about 90% of CO_2. Some elements reported probably came up as dust and some possibly as dissolved solutes in water mist. SO_4 and NO_3 possibly due to air oxidation of H_2S and NH_3 after collection, respectively. 0.2ppm Al reported in one analysis but none was detected in the others.

CRS = Castle Rock Springs reservoir water. Analysis quoted from Frye (1975), wherein it is designated as "analysis #2". Water entry at a depth of 2176m with a flow rate of about 13 tons/hour. Associated vapor phase not sampled and the circumstances of collection were such that most gas content and considerable steam were probably lost. At higher flow rates saturated steam was produced. Specific conductance at 25°C, 1000.0μΩ.

Sulfur Bank Mine = Sample of water taken from "Herman pit Northside 'geyser' spring" in the Sulfur Bank mercury mine near Clearlake Park, Lake County, California. Analysis by C.E. Roberson, reported by White and Roberson (1962), wherein it is designated "Analysis Number 5". As this specimen was collected from a natural seep, most of the H_2S originally in the water must be presumed to have been lost. (The reported CO_2 was reported as HCO_3^-.) Specific conductance at 25°C, 7430μΩ. Total dissolved solids after evaporation at 180°C, 5220ppm.

Long Valley = Water from Geothermal Well Magma-Ritchie 5 in Long Valley, Mono County, California. Analysis performed and reported by Willey, O'Neil and Rapp (1974). Sampled 5/19/72 by flowing water from well into an ice-cooled chamber. Method of sampling suggests that most of the water and dissolved gases and steam were retained. Sample designated 35/28E-32E95. Also reported but not shown in Table (in ppm): < 0.01 Be, < 0.01 Cd, < 0.06 Co, < 0.1 Au, < 0.05 Ni, < 0.001 Se. Specific conductance at 25°C 1920μΩ, total dissolved solids (evaporated at 180°C), 1420ppm. Down-hole temperatures estimated as 200-240°C.

Notes for Table 12.2 (continued)

Wairakei = Wairakei (N.Z. Bore 71, sampled 8/31/66, analyzed by Glover. Analysis reported by Weissberg (1969). Corrected to account for steam lost by flashing at atmospheric pressure. Values for H_2S and CO_2 given in parentheses give total amount in water plus separated steam. Max imum measured temperature 239°C.

Broadlands = Broadlands (N.Z.) drill hole 2, sampled 8/23/66, analyzed by Mahan. Analysis reported by Weissberg (1969). Same corrections applied as to Wairakei specimen above, same presentation of H_2S and CO_2 data. Maximum measured temperature 294°C.

Cerro Prieto - Cerro Prieto (Mexico) Well No. M-19A, sampled 9/23/76. This water is the residue of brine flashed at atmospheric pressure. Chemically uncombined gases and 0.284 kg steam/1 kg residual brine lost in collection. Data courtesy of A. Mañon M.

Salton Sea = Well No. 1 IID in the Salton Sea area. Composition based on analyses Donaldson and Roberson, and White, interpreted, partially corrected and reported by Skinner, White, Rose and Mays (1967). Water loss apparently avoided or corrected for. Gas losses uncertain. This is why CO_2 is reported as a minimum value and H_2S as a range.

CHAPTER THIRTEEN - PHYTOTOXICITY OF GEOTHERMAL EMISSIONS

13.1 Introduction

Injury to vegetation resulting from exposure to air pollutants is a major concern in evaluating man's impact on the environment. Increasingly, attention is being focused on the relationship between energy production, air pollution, and vegetation damage. One case in point is the Geysers Geothermal resource area in Northern California. Begining in 1973 it was noted that certain trees surrounding some generating units appeared to be in a stressed condition. Vegetation stress was characterized by a discoloration of leaves known as chlorosis, and marginal die back or necrosis. Subsequent studies have indicated that cooling tower emissions are responsible for these conditions. Chemical leaf analysis suggests that boron may be the primary toxic agent involved.

13.2 Area showing vegetation stress

The area of vegetation stress is centered on PG&E generating Units 3&4 (27 MW each) and 5&6 (53 MW each). To a lesser degree the vegetation surrounding Units 7&8 (53 MW each) was noted as showing similar symptoms. Field sampling and aerial infrared photography has indicated that 60 percent of all stressed vegetation is to be found within 300 meters of the generating units, while 96 percent is within 425 meters (P.U.C. 1975). The degree of injury to vegetation generally decreases as one moves away from the units. Annual surveys indicate that no expansion in the area of injury has occurred since the problem was recognized in 1973.

13.3 Species involved

The vegetation composition of the Geysers area is a complex mosaic

of different species associations known as coniferous forest, douglas fir forest, mixed evergreen forest, chaparral, and oak woodland. Although over 60 species have been identified as occurring throughout the area, only a few have shown signs of injury.

Bigleaf Maple (Acer macrophyllum) has shown the greatest injury. It is a deciduous tree which grows best on deep alluvial soils near streams. Its distribution tends to be limited by the availability of water.

Douglas Fir (Pseudotsuga mensiesii) has shown limited injury. It tends to be limited to well drained soils with adequate moisture.

Oaks, primarily Live Oak (Quercus agrifolia), Black Oak (Quercus kelloggii), have shown only limited signs of injury. Injury has only occurred in those trees growing next to the generating units mentioned.

The two pines, Yellow Pine (Pinus ponderosa), and Digger Pine (Pinus sabiniana), which grow in the area have not shown signs of injury.

Shrubs, especially Scrub Oak (Quercus dumosa), and Leather Oak (Quercus durata), have shown very limited signs of injury.

No herbaceous species have as yet been recorded as showing signs of injury. Most of the area is however, subject to grazing which would remove any injured herbaceous plants.

It appears that the more xerophytic, drought resistant species, such as the pines and oaks, are less subject to injury. The mesophytic, less drought resistant, species like maple and fir appear more susceptible to the toxic effects of cooling tower emissions.

13.4 Characteristics of vegetation stress

Vegetation stress should not be confused with mortality since none of the injured trees have as yet been killed, nor has their growth rate been noticeably changed. Leaves appear to be subject to a bronzing (chlorosis) which is followed by a marginal die back (necrosis).

Similar symptoms are commonly associated with several abnormal environmental conditions. Necrotic injury may result from moisture stress, when a plant is losing more water from its leaves than its roots are able to absorb. Moisture stress may be severe when associated with extreme temperature variations. Such conditions are not unusual in the Geysers area. Chlorosis injury symptoms may also result from unusually low temperatures. Nutrient deficiencies, frost, fungus, insects and excessive nutrients may also cause similar vegetation injury (Treshow, 1965, 1970).

As stress increases, necrosis characteristically extends from the leaf margin toward the midrib or veins. Ultimately the entire leaf may die and fall off. The following season new leaves are formed and the process of chlorosis and marginal necrosis begins again. This appears to be the typical pattern in Bigleaf Maple injury at the Geysers.

Since several distinct factors may result in similar injury selected leaves have been analyzed in order to determine their chemical composition. Such analysis has shown that boron concentrations were greater in necrotic leaf tissue than in healthy leaf tissue. It was

also found that a direct correlation existed between physical leaf damage, or stress, and increased boron concentrations (P.U.C. 1975).

As a result of leaf tissue analysis it was felt that boron was the primary toxicant in cooling tower emissions.

13.5 Geothermal emissions

The natural steam from a geothermal well is predominantly water vapor. However, it also contains small amounts of naturally occurring gases and solids. At the present time nearly all the gases are released to the atmosphere through off-gas ejectors and the cooling towers. Only small amounts of solid materials are released to the atmosphere through cooling tower drift (small water droplets).

Essentially all of the methane, nitrogen, hydrogen and ethane are released into the atmosphere through the off-gas ejectors. Carbon dioxide, hydrogen sulfide, ammonia and mercury are released to the atmosphere through off-gas ejectors and the cooling towers. Release of arsenic and boron is by way of cooling tower drift (Griffin, et al.,1974).

In addition to the noncondensible gases and solids which are found in the steam, several other trace elements have been identified in the cooling water. These include silicon, aluminum, iron, calcium, sodium, magnesium, titanium and strontium. All of these elements are naturally found in the soils of this area and are probably present because of the scrubbing of atmospheric dust by the cooling towers.

Not all Units have similar emission rates. Units 1 through 6, whose areas include the area of vegetation stress, have greater drift

rates than the newer Units. Griffin et al., (1974) using a drift rate of 0.015% for all Units estimated emissions of arsenic, mercury and boron. While As and B estimates may be satisfactory for Units 7 through 11, they are too low for Units 1 through 6. For Units 1 through 4 the drift rate is 0.2%, and for Units 5 and 6 it is 0.05%. Their estimates of the mercury emissions were completely wrong, because it is actually released in gaseous form (See S10.3).

Vegetation injury has only been observed near the older Units which have the higher drift rates and correspondingly higher B and As emission rates.

Release of trace elements was estimated at less than 0.22 kg/day each for 53 MW unit. Lead, copper, chromium, manganese, nickel and zinc have also been identified in the cooling water. Release through cooling tower drift was estimated at less than 0.04 kg/day each for a 53 MW unit (Griffin et al.,1974).

Of the gases, solids and trace elements hydrogen sulfide, ammonia and boron have been analyzed for their possible toxicity to vegetation.

Emissions of H_2S have been discussed in Chapter 8. Emissions of the other substances have been discussed in Chapter 10.

Samples of cooling tower drift were collected near Units 5 & 6 and 7 & 8. Analysis of these samples indicated that the principle components of the drift residue were ammonium sulfate and boric acid (Sharp 1976). Deposition rates were calculated in order to determine the relative toxicity of each component.

Adjacent to Units 5 & 6 the maximum deposition rate for ammonia was give as 70 kg/hectare/year, the mean rate was 25 kg/hectare/year. The corresponding deposition rates for Units 7 & 8 were 50 kg and 12 kg/hectare/year. By way of comparison, ammonium sulfate fertilizer application rates vary from 37 to 920 kg/hectare/year (Sharp, 1976).

Although boron is an essential element in higher plants, excessive concentrations can be harmful. Griffin et al., (1974) calculated the release rate of boron as 4 kg/day from a 53 MW unit. Using precipitation data for the Geysers area and mean deposition rates an equivalent boron concentration rainwater runoff was determined as 6.6 ppmw at Units 5 & 6, and 2.4 ppmw at Units 7 & 8 (Sharp, 1976).

13.6 *Cooling tower drift diffusion*

The transport and diffusion of cooling tower emissions in the rugged terrain of the Geysers is highly complex. This complexity results from local terrain variations, mesoscale and microscale climatic variables.

Emissions concentrations decrease rapidly with distance from major sources. Little effect is noted at distances of greater than 16 kilometers (NSCAPCD 1976).

The emitted boron is suspended in the small water droplets which make up the cooling tower drift. These droplets generally settle (fallout) within 425 meters of the cooling towers. Hydrogen sulfide is known to be carried well beyond the area of greatest vegetation injury. Local winds probably do not greatly disperse boron.

Data need to be collected on depositional rates for emissions in the area immediately surrounding the cooling towers. Such data will aid in determining boron deposition in the area of greatest vegetation injury.

13.7 Hydrogen sulfide (H_2S) toxicity

Few studies have focused on hydrogen sulfide injury to plants. McCallan et al., (1936) undertook a brief study of its toxic action on 29 species of

green plants. The plants were subjected to differing hydrogen sulfide concentrations in outdoor chambers. Tests lasted for five hours during the day. Temperature was noted to vary from 23° to 26°C. Relative humidity was between 82 and 100 percent. Table 13.1 summarizes the results of this test on certain plants.

Different species varied widely in their response, with toxic threshold values ranging from 40 ppm_v to 400 ppm_v. Hydrogen sulfide injury first appeared on young growing tissue, with increasing concentrations causing extension of injury to older tissue. Marginal scorching followed by necrosis was the most common symptom of injury. The study found that as temperature increases so does plant injury. Table 13.2 gives some data on temperature and plant injury.

Plant species	Concentration of H_2S in ppm_v				
	20-40	40-50	50-60	60-80	200-400
Purslane	-	-	o	-	-
Apple	-	-	o	-	-
Peach	o	o	-	x	o
Pepper	-	-	x	-	xx
Sunflower	o	x	xx	xxx	xxx
Buckwheat	xx	xx	xx	xxx	xxx
Cornflower	o	xxx	-	xxx	xxx
Soybean	o	xx	xxx	xxx	xxxx
Poppy	-	-	xxxx	-	-
Tomato	xx	xxx	xxx	xxxx	xxxx
Clover	-	xxx	-	-	-
Radish	xx	xxx	-	xxxx	xxxxx

Table 13.1. Hydrogen sulfide injury to selected plants at different concentrations.*

* o=none, x=very slight, xx=slight, xxx=moderate, xxxx=severe, xxxxx=very severe.

Temperature °C	24°	26°	32°
Concentration ppm_v	390	215	72
Peach	o	o	xx
Sunflower	o	xxx	-
Buckwheat	xx	xx	xxx
Soybean	xxxx	-	xxx
Cornflower	-	xxx	xxxxx
Tomato	xxx	-	xxxxx

Table 13.2. Effect of temperature on hydrogen sulfide injury.*

* See footnote in table 13.1

Further toxicity studies were undertaken by Thornton and Setterstrom (1940). Tomato, buckwheat, and tobacco were selected. Each was exposed to ammonia, chlorine, hydrogen cyanide, hydrogen sulfide and sulfur dioxide gases. Plants were subjected to concentrations of 1, 4, 16, 63, 250 and 1,000 ppm_v for periods of 1, 4, 15, 60, 240 and 960 minutes. The results were given as percentage of leaf and stem area injured by treatments. Table 13.3 gives time in minutes required for 50 percent injury at 1,000 ppm_v for ammonia (NH_3) and hydrogen sulfide (H_2S) gas.

	Plant	Gas NH_3	Gas H_2S
Leaves	Tomato	3	30
	Buckwheat	5	60
	Tobacco	8	100
Stems	Tomato	60	45
	Buckwheat	30	120
	Tobacco	240	480

Table 13.3 Time in minutes required for 50 percent injury to plants at 1,000 ppm_v gas concentration.

Hydrogen sulfide was shown to be only mildly toxic at lower levels of concentration. In order of toxicity of all gases tested, hydrogen sulfide was found to be least toxic.

Barton (1940) studied the effect of the same gases used by Thornton and Setterstrom on the germination rate of radish and rye seeds. Gas concentrations were 250 and 1,000 ppm_v for periods of 1, 4, 15, 60, 240 and 960 minutes. It was found that hydrogen sulfide again had a relatively low toxicity. Germination percentages for both radish and rye compared favorably with those

from control lots.

In an attempt to determine the toxicity of hydrogen sulfide, Dobrovolsky and Strikha (1970) studied the sprouting of radish seeds in concentrations of 0.006, 0.019, 0.033, 0.066, 0.198 and 0.660 ppm_v. The experiment lasted 14 days during which time gas concentrations were maintained more or less constant. Percent sprouting, number of sprouts with green leaves, average size of sprouts, raw weight of sprouts and catalase activity were recorded. These values are given in table 13.4.

	Concentrations of H_2S ppm_v							
Indicators	Control	0.006	0.019	0.033	0.066	0.198	0.660	0.660+
Sprouting %	100	71	63	63	60	58	45	48
Number of sprouts with green leaves No./%*	54/100	48/89	43/80	43/80	40/74	35/65	33/61	38/70 **
Average size of sprouts, cm/%*	9/100	7.6/100	7.2/80	7/78	—	6.8/75	—	8.7/96***
Raw weight of sprouts, cm/%*	100	99.3	96.4	92	90		88	99.0
Catalase activity ml O_2 per min/%*	19.3/100	16.5/85	15/78	12/62	11.5/60	8/42	—	18.5/96

Table 13.4. Effect of hydrogen sulfide on certain vital functions of sprouting radish seeds (var. "Red with white tip").

* Translator's note: These percentage values are the average values determined, expressed as a percentage of the average control values.

** After three days.

*** After fourteen days.

The data indicate that low concentrations of hydrogen sulfide (0.006 ppm_v) depressed sprouting and growth. Necrosis of leaves occurred with concentrations of 0.066 ppm_v or higher. It was noted that hydrogen

sulfide had an effect on certain aspects of the water regime of plants. The leaves of plants exposed to hydrogen sulfide lost water to the extent of 50-60 percent or more in six hours, while leaves of control plants lost only 25-35 percent during the same period.

Fumigation of weeds with hydrogen sulfide gas at 100 and 500 ppm_v for four hours was undertaken by Benedict and Breen (1955). Ten "weed" species were selected. The plants were 3 to 6 weeks old. Young plants were shown to be more susceptible to higher concentrations than were the older plants. Data was given as percentage of leaf area marked or damaged. Mean values ranged from 24 to 75 percent damage. Plants were grown in both dry and moist conditions, with those growing in dry conditions tending to be more sensitive to hydrogen sulfide than those in moist conditions.

Toxic levels of hydrogen sulfide have generally been found to be above known ambient concentrations at the Geysers. Although cooling tower emission concentrations tend to be above established State standards, they are below most demonstrated toxic levels. Even at concentrations of 400 ppm_v for five hours some plants escape injury (McCallan _et al._, 1936). Dobrovolsky and Strikha (1970) demonstrated that low concentrations of hydrogen sulfide can be toxic to radish seeds. The great difference in demonstrated toxic levels of hydrogen sulfide leads one to the question of plant physiology and toxicity. This is as yet a poorly understood area of research.

Work is presently in progress at the University of California, Riverside to determine the effect of continuous exposure of low

hydrogen sulfide concentrations (0.03 and 0.30 ppm_v) on Bigleaf maple and Douglas fir. No results have as yet been obtained from this study.

Unless hydrogen sulfide is being concentrated in the leaf tissue of plants at the Geysers it does not seem to be the major cause of vegetation stress.

13.8 Ammonia (NH_3) toxicity

Some studies have attempted to determine toxic levels for gaseous ammonia. Thornton and Setterstrom (1940) reported injury to some plants after exposure to 40 ppm_v for one hour and slight marginal injury from exposure to 16.6 ppm_v after four hours. Table 13.3 includes data on plant injury resulting from exposure to 1,000 ppm_v ammonia.

Benedict and Breen (1955) exposed various "weeds" to 3 ppm_v and 12 ppm_v ammonia gas for four hour periods. Percentage of leaf injury was 0 to 15 at 3.0 ppm_v, and 1 to 48 at 12.0 ppm_v.

Seed germination studies by Barton (1940) indicated that radish germination was reduced after exposure to 1,000 ppm_v ammonia for 240 minutes. Extension of the treatment period to 960 minutes killed all seeds. Rye seeds were found to be even more sensitive than radish. Seeds exposed to 1,000 ppm_v for 240 minutes were all killed, while those exposed to 250 ppm_v for 960 minutes had a germination rate of only 48 percent.

Although the toxic levels indicated by these studies are above emission levels, it is possible that long term exposure to low level concentrations may be harmful.

13.9 Boron (B) toxicity

Boron in relatively low concentrations may be toxic to plants. Eaton (1944) grew fifty species of plants in nutrient solutions containing a trace (0.03 to 0.04 ppm_v), 1.0, 5.0, 10.0, 15.0 and 25.0 ppm_v boron. Approximately 25 percent of the plants grew best in trace concentrations while several responded favorably to concentrations as high as 10.0 and 15.0 ppm_v. Boron is taken up by plants and concentrated in leaf tissue. Such concentrations eventually reach levels which are toxic to the plant. Boron concentrations in leaf tissue for four plants studied are given in table 13.5.

Plant and boron concentration in ppm_v	Dry leaf analysis ppm_w
Alfalfa	
Trace	30
1.0	199
5.0	272
10.0	343
15.0	531
25.0	822
Sugar beet	
Trace	19
1.0	106
5.0	234
10.0	495
15.0	588
25.0	975
Tobacco	
Trace	19
1.0	72
5.0	261
10.0	365
15.0	474
25.0	771
Tomato	
Trace	34
1.0	103
5.0	253
10.0	531
15.0	684
25.0	1,168

Table 13.5. Concentration of boron in dry leaves from plants grown in boron nutrient solutions.

The roots, stems and fruits contained only small amounts of boron in comparison with the leaves. Boron concentrations in leaves of plants grown in trace amounts were 100 to 5,000 times the boron concentration in the nutrient solution. In the 1.0 ppm_v solution boron concentrations were 22 to 519 times that of the nutrient solution. Concentrations were substantially lower in plants grown in 5.0 to 25.0 ppm_v nutrient solutions.

Boron appears to be absorbed through the roots and transported to the leaves in the transpiration stream. Once in the leaves boron moves away from the veins into the leaf tissue and towards the margins where it is concentrated. The leaves, therefore, act as a sink for boron.

Oertli and Kohl (1961) grew plants in a boron solution of 10 ppm_v. Leaf tissue was analyzed to determine concentration and toxicity symptoms. Necrotic, chlorotic and green tissue were compared. These data are summarized in table 13.6.

Plant	Time days	Concentrations Necrotic ppm_w	Chlorotic ppm_w	Green ppm_w
Bean	8	1960-2510	970-1300	630-680
Alta fescue	8	1510-8200		50-760
Bluegrass	12	1860-6800		40-960
Bermuda grass	16	1380-5770		40-700
Cotton	16	780-2290	410-610	710-1040
Tomato	8	3900-5150	2280-3130	400-970
Corn	16	1220-12,860	490-1160	360-790
Sweet gum	20	2610-4330	760-850	490-980
Carrot	20	2000		470-960
Barley	6	1170-5030		90-170

Table 13.6. Time necessary to produce boron toxicity symptoms with 10 ppm_v in solution, and boron concentrations in leaves of various species.

Since boron tends to be concentrated in leaf tissue over a considerable period of time, critical toxic levels in cooling tower drift and deposition on soils are difficult to determine. Eaton (1944) noted that for many plants boron concentrations for best growth were 1.0 ppm_v or less while toxic levels were 5.0 ppm_v. If boron concentrations from the Geysers equal or exceed those calculated by Griffin et al. (1974) they may prove toxic to nearby plants. Sharp (1976) calculated water boron concentrations near Units 5&6 as 6.6 ppm_w. Such concentrations are great enough to result in toxic concentrations in leaf tissue. During a normal growing season plants have sufficient time to concentrate toxic levels of boron.

13.10 Physiological aspects of toxic emissions

Unfortunately little research has focused on the physiological aspects of toxins associated with geothermal emissions. Most research has concentrated on sulfur dioxide (SO_2) and smog related pollutants. Several factors are involved in the susceptibility of various species. Important factors include: the influence of environmental factors, such as temperature, humidity, light intensity and day length; the mode of entry of pollutants and their subsequent translocation; and the physiological responses of the plant to pollutants (Scurfield 1960).

The health of the plant, and conditions in which it is growing, may have a significant effect on susceptibility. Dormant plants appear to be less subject to injury than active growing plants. This may be related to stomatal movement and general metabolism. Any

environmental conditions which may result in stress to a plant will probably increase its susceptibility.

Toxins can enter a plant through either the leaf stomata or the root system. As a gas hydrogen sulfide probably enters leaves through stomatal openings. Once in the leaves it can be concentrated in the mesophyll tissue. Boron is most likely taken up through the roots, transported to the leaves, and concentrated in mesophyll tissue. Acidic emissions may settle on the surfaces of leaves and cause chlorosis or flecking.

Almost no research has been undertaken on the physiological effects of toxins. Continued exposure to toxic emissions must have an effect on photosynthesis, respiration and transpiration. Since injured trees tend to drop their leaves earlier than usual growth would appear to be altered. The exact nature of such effects is generally unknown.

13.11 Summary

In 1973 vegetation stress was noted near the Geysers Generating Units 3&4, 5&6 and 7&8. Field studies have shown that 60 percent of the stressed vegetation is within 300 meters of the units and 96 percent within 425 meters. Bigleaf maple was found to show the greatest stress. To a lesser degree Douglas fir, Oaks, Scrub oak and Leather oak showed signs of stress.

Symptoms were a bronzing of leaf tissue (chlorosis) followed by marginal die back (necrosis) and finally early leaf drop. Tree growth does not appear to have been greatly influenced by this stress. Research has not, however, focused on the question of injury and tree growth.

Several gases and solids are emitted to the atmosphere through the cooling towers. Studies have determined the quantities of hydrogen sulfide, ammonia and boron in these emissions. Chemical analysis of leaf tissue indicates that boron may be the toxic agent involved in vegetation stress.

Cooling tower drift and diffusion are greatly influenced by local topography and climatic conditions. Ammonia and boron may not be transported far from the cooling towers because they are in solution in small water droplets (drift).

Cooling tower release of hydrogen sulfide, ammonia and boron differ between the units which have different drift rates. Hydrogen sulfide concentrations are generally below toxic thresholds which range from 40 to 400 ppm_v. Studies with radish sprouts suggest that concentrations as low as 0.006 ppm_v depressed growth. Ammonia emissions seem to be below demonstrated toxic levels. Ammonia was shown to be toxic at concentrations of 16.6 ppm_v after four hours exposure which is above estimated emissions

Boron emissions are great enough to result in toxic concentrations in leaf tissue. Boron concentration leads to marginal die back in leaves. Toxic levels in leaf tissue may result from trace amounts of boron in nutrient solutions. Continued exposure to low levels of boron appear to result in very high leaf concentrations followed by marginal die back as is seen at the Geysers.

The long term physiological aspects of toxic emissions are generally unknown at this time. Exposure to such emissions must have an effect on photosynthesis, respiration and transpiration which will in the long run affect growth.

Table A1

Metric Units and Miscellaneous Conversion Factors

1 m = 1 meter = 3.281 ft

1 km = 1 kilometer = 1000 meters = 3281 ft = 0.6214 miles

1 km^2 = 10^6 m^2 = 1.0764 x 10^7 ft^2 = 0.3861 $miles^2$

1 ha = 1 hectare = 100 m x 100 m = 0.01 km^2 = 2.471 acres

1 ha-m = 1 hectare-meter = 10,000 m^3 = 8.11 acre-feet

1 kg = 1 kilogram = 1000 grams = 2.205 pounds

1 tonne = 1 metric tonne = 1000 kg = 2205 pounds = 1.1023 English tons

1 l = 1 liter = 1000 cm^3 = 0.001 m^3 = 0.2642 gallons

1 km^3 = 10^9 m^3 = 10^{12} l

1 J = 1 joule = 1 kg · m^2/sec^2 = 9.486 x 10^{-4} BTU = 0.2390 calories

1 kJ = 1 kilojoule = 1000 J = 0.9486 BTU = 0.2390 kcal = 2.778 x 10^{-4}

1 kcal = 1 kilocalorie = 4.184 J = 3.9683 BTU = 0.001162 kWh

1 J/g = 1 kJ/kg = 4.184 cal/g = 2.324 BTU/lb

1 kWh = 1 kilowatt-hour = 3600 kJ = 860.4 kcal = 3415 BTU

1 kW = 1 kilowatt = 1000 watts = 1 kJ/sec = 1.34048 hp

1 MW = 1 megawatt = 1000 kW

1 bar = 0.987 atmospheres = 14.5 lb/in^2 = 1.02 kg/cm^2 = 750.1 mmHg
= 29.53 inHg

1°C = 1 degree Celsius = 1°K = 1 degree Kelvin = 1.8°F

temperature (Celsius) = 1°K = temp (Fahrenheit) -32)

temperature (Kelvin) = temperature (absolute) = temp (Celsius) + 273.16

International joules and ordinary gram calories and BTUs are assumed

Source: CRC (1967), pp. F204 - F226

Table A2

Saturation Pressures of Liquid Water

Temp (^{o}C)	P_s (bar)
0	0.006
10	0.012
20	0.023
30	0.042
40	0.074
50	0.123
60	0.199
70	0.312
80	0.474
90	0.701
100	1.01
110	1.43
120	1.99
130	2.70
140	3.61
150	4.76
160	6.18
170	7.92
180	10.03
190	12.55
200	15.54
210	19.08
220	23.20
230	27.98
234	30.09
240	33.48
250	39.78
260	46.94
270	55.05
280	64.19
290	74.45
300	85.92

From Irvine and Harnett (1976)

Bibliography

Adams, D.F., and F.A. Young, 1965. "Draft Odor Detection and Objectionability Tresholds", Washington State University Progress Report on U.S. Public Health Service Grant. Quoted in Miner (1969).

Allen, E.T., and A.L. Day, 1926. "Steam Wells and Other Thermal Activity at 'The Geysers' California." Carnegie Institution, Washington. 106 pp.

Allen, G.W., 1974. "Ninth Progress Report to the Public Utilities Commission of the State of California, Geysers Hydrogen Sulfide Emissions Abatement Program". PG&E Report 7485. 18-74.

Allen, G.W., and H.K. McCluer, 1975. "Abatement of Hydrogen Sulfide Emissions from the Geysers Geothermal Power Plant," pp.1313-15 in United Nations (1975).

Allen, G.W., H.K. McCluer and L. Semprini, 1975. "Measurement of Hydrogen Sulfide Emissions Abatement at Unit 11, The Geysers, Using Iron Catalyst, December 3, 1975". PG&E Dept. of Eng. Res. Report 7485. 29-75.

Allen, G.W., and L. Semprini, 1975. "Hydrogen Sulfide Emissions Abatement during Preliminary Burner/Scrubber tests at Unit 4, The Geysers, April 10, 1975". PG&E Report 7485. 23-75.

Allen, G.W. and L. Semprini, 1976. "Hydrogen Sulfide Emissions Abatement during Preliminary Burner/Scrubber Tests at Unit 4, The Geysers, December 22, 1975-January 26, 1976." PG&E Report 7485.31-75.

Altshuler, S.L., 1976. "Ambient Air Quality at and in the Vicinity of the Geysers 1970-1975". PG&E Report 7485. 25-75.

American Conference of Governmental Industrial Hygienists, 1971. Documentation of the Threshold Limit Values for Substances in Workroom air.

American Conference of Governmental Industrial Hygienists, 1975. Threshold Limit Values for Chemical Substances in Workroom Air Adopted by ACGIH for 1975.

Anspaugh, L.R., and P.L. Phelps, 1975. "Interim Report on the Investigation of the Impact of the Release of 222 Rn, its Daughters, and Possible Precursors at the Geysers Geothermal Field and and Surrounding Area." Lawrence Livermore Laboratory Report Misc. 2033, March 11, 1975.

Ashe, D., Union Oil Co., personal communication.

Atlantis Scientific, 1975. "Environmental Impact Report, Castle Rock Springs Geothermal Steam Area, Burmah Oil and Gas Company, Lake County, California."

Atwater, T., 1970. "Implications of Plate Tectonics for the Cenozoic Tectonic Evolution of Western North America", Geological Society of American Bulletin, v.81, pp. 3513-3536.

Averiev, V.V., 1961. "The Technique of Testing Geothermal Wells". pp. 54-59 in v.3 of United Nations (1961).

Axtmann, R.C., 1974. "An Environmental Study of the Wairakei Power Plant", Physics and Engineering Laboratory (DSIR) Report No. 445. Lower Hutt, New Zealand, December 1974.

Axtmann, R.C., 1975a. "Environmental Impacts of a Geothermal Power Plant", Science, 187, 795 (1975).

Axtmann, R.C., 1975b. "Emission Control of Gas Effluents from Geothermal Power Plants", Envir. Lett. 8, 135 (1975).

Bacon, C.F., 1976a. "Engineering Geology of the Geysers Geothermal Resource Area" California Div. of Mines & Geology: Special report 122. 35 p.

Bacon, C.F., 1976b. "Blowout of a Geothermal well: the Geysers Geothermal Field, Sonoma County California". California Geology, Jan. 1976 pp. 13-17.

Baily, E.H., W.P. Irwin, and D.L. Jones, 1964. "Franciscan and Related Rocks, and their Significance in the Geology of Western California." California Division of Mines and Geology Bulletin 83. Ferry Building, San Francisco. 177 pp.

Bariliak, I.R., I.A. Vasilieva , and L.P. Kalinovshaja, 1975. "Effects of Small Concentrations of Carbon Bisulphide and Hydrogen Sulphide on Intrauterine Development in Rats". Arkhiv anatomii, gistologii i embriologii, v. 68 (5): 77-81, 1975. (In Russian with English abstract)

Barton, L.V., 1940. "Toxicity of ammonia, chlorine, hydrogen cyanide, hydrogen sulphide, and sulphur dioxide gases. IV. Seeds." Contributions from Boyce Thompson Institute, Vol. 11, No. 5, pp. 357-364.

Benedict, H.M. and W.H. Breen, 1955. "The use of weeds as a means of evaluating vegetation damage caused by air pollution." Proceedings of the third National Air Pollution Symposium, pp. 177-198.

Benedict, H.M., D.D. Davis, and A.S. Heagle, 1974. "Dose responses of vegetation to minor air pollutants." Paper presented at the annual meeting of the Air Pollution Association, Denver, Colorado.

Berman, E.R., 1975. Geothermal Energy, Noyes Data Corp. Park Ridge, N.J.

Bingham, W. Eastman Whipstock Co., personal communication.

Bolton, R.S., 1961. "Blowout Prevention and Other Aspects of Safety in Geothermal Steam Drilling" pp. 78-87 in V. 3 of United Nations (1961).

Bowman, H. A., Hebert, H. Wollenberg and F. Asaro, 1974. "A Detailed Chemical and Radiometric Study of Geothermal Waters and Associated Rock Formations, with Environmental Implications", Report LBL-2966, the Lawrence Berkeley Laboratory, Berkeley, California.

Braker, W., and A.L. Mossman, 1971. Matheson Gas Data Book, Matheson Gas Products Company, East Rutherford, New Jersey.

Brigham, W.E., and W.B. Morrow, 1974. "P/Z Behavior for Geothermal Steam Reservoirs". Paper Number SPE 4899, presented at the 44th Annual California Regional Meeting of the Society of Petroleum Engineers of AIME, San Francisco, April 4-5, 1974.

Brunetti, V., and E. Mezzetti, 1970. "On some troubles most frequently occurring in Geothermal drilling" Geothermics, Special Issue 2 v. 2 pp.751-756.

Burgassi, P., G.C. Stefani, R. Cataldi, A. Rossi, P. Squarci, L. Taffi, 1975. "Recent Developments of Geothermal Exploration in the Travale-Radicondoli Area". pp. 1571-1581 in United Nations (1975).

Byron, L.G., 1962. "Wild Steam Well controlled by Directional Drilling" World Oil, April 1962, V.154, no. 5, pp.154-6.

California Air Resources Board, 1970. "Ambient Air Quality Standards - Section IX. Appraisal of the Ambient Air Quality Standard for Hydrogen Sulfide". January 1970.

California Division of Oil and Gas, 1974. California Statewide Geothermal Regulations, Appendix B, pp. 33-49. May 18, 1974.

California State Department of Public Health, 1962. "Basis for Ambient Air Quality Standards for Hydrogen Sulfide-Technical Report of California Standards for Ambient Air Quality and Motor Vehicle Exhaust", Supplement No. 2, Additional Ambient Air Quality Standards, State Department of Public Health, Berkeley, California.

California State Lands Commission, 1976. Draft of the Environmental Impact Report on Proposed Geothermal Development in the Boggs Mountain State Forest.

California State Water Resources Control Board, 1971. Water Quality Criteria, edited by J.E. McKee and Harold W. Wolf.

Campbell, G.E., 1974. "Geothermal Well Drilling and Completion Practices in California Including Casing and Abandonment Programs and Examples of Blowouts." Geothermal Short Course, October 16-18, 1974, Boise, Idaho, 31 p.

Capuano, L. Aminoil USA, personal communication.

Castrantas, H.M., T.A. Turner, and R.W. Rex, 1976. "Hydrogen Sulfide Abatement at Geothermal Wells." Presented at the Second Geothermal Environmental Seminar, October 27-29, Konocti Harbor Inn, Lake County, Ca.

Cataldi, R., G. Stefani, and M. Tongiorgi, 1963. "Geology of Lardarello region (Tuscany) Contributions to the Study of Geothermal Basins". pp.235-274 in Tongiorgi (1963).

Cavanagh, L.A., and R.E. Ruff, 1976. "Quarterly Report Covering Period 1 Janury to 1 April 1976, SIR Project 4351" (Stanford Research Institute Geysers Area Air Monitoring Program.)

Celati, R., P. Noto, C. Panichi, P. Squarci and L. Taffi, 1973. "Interactions Between the Steam Reservoir and Surrounding Aquifers in the Lardarello Geothermal Field," Geothermics, Vol. 2, Nos. 3-4, pp.174-185.

Celati, R., P. Squarci, L. Taffi, and G.C. Stefani, 1975. "Analysis of Water Levels and Reservoir Pressure Measurements in Geothermal Wells," pp. 1583-1590, in United Nations (1975).

Celati, R., P. Squarci, G.C. Stefani, L. Taffi, 1976. "Study of Water Levels in Lardarello Region Geothermal Wells for Reconstruction of Reservoir Pressure Trend." Presented at the Latin American International Geothermal Energy Symposium, Guatemala City, October, 1976. (In press.)

Ceron, P., P. DiMario, and T. Leardini, 1975. "Progress Report on Geothermal Development in Italy from 1969 to 1974 and Future Prospects." pp. 59-66 in United Nations (1975).

Chapman, R.H., 1975. "Geophysical Study of the Clear Lake Region, California," Special Report 116, California Division of Mines and Geology, 1416 Ninth Street, Room 1341, Sacramento, Ca. 95814.

Chemical Rubber Company, 1967. Handbook of Chemistry and Physics, 48th Edition. Cleveland.

Cigni, U., and Giovannoni, A., 1970. "Planning Methods in Geothermal Drilling." Geothermics, special issue 2 (1970), v. 2, part 1, pp. 725-734.

Clear Lake Observer, 1976. "Who Pulled the Plug?" August 12.

Contini, R. and U. Cigni, 1961. "Air Drilling in Geothermal Bores," pp. 89-97 in v. 3 of United Nations (1961).

Cook, W.S., USGS, personal communication.

Craig, H., 1963. "The Isotopic Geochemistry of Water and Carbon in Geothermal Areas," pp. 17-54 in Tongiorgi (1963).

Crecelius, E.A., D.E. Robertson, J.S. Fruchtet and J.D. Ludwick, 1976. "Chemical Forms of Mercury and Arsenic Emitted by a Geothermal Power Plant." Presented at the University of Missouri 10th Annual Conference on Trace Substances in Environmental Health, Memorial Union, University of Missouri-Columbia, June 8, 9 and 10, 1976. Report BN-SA-596, Battelle Northwest Laboratories, Richland, Washington, 99352.

Cromling, J., 1973. "How Geothermal Wells are Drilled and Completed." World Oil, December 1973, pp. 42-45.

Cromling, J., 1973. "Geothermal Drilling in California." Journal of Petroleum Technology, September 1973, pp. 1033-1038.

Dal Secco, A.G., 1970. "Turbocompressors for Geothermal Plants," pp. 819-833, in Geothermics, Special Issue 2, v. 2, part 1 (1970).

Dal Secco, A.G., 1975. "Geothermal Plants: Gas Removal from Jet Condensers." pp. 1943-1948, in United Nations (1975).

D'Amore, F., R. Celati, G.D. Ferrara, and C. Panichi, 1975. "Secondary Changes in the Chemical and Isotopic Composition of the Geothermal Fluids in Lardarello Field." Presented at the meeting of the Advisory Group on the Application of Nuclear Techniques to Geothermal Studies, September 1975, Pisa, Italy, Geothermics (in press).

Davenport, S.J., 1945." Hydrogen Sulfide Poisoning as a Hazard in the Production of Oil," U.S. Bureau of Mines Information Circular 7329:1-9, July 1945.

Dench, N.D., 1961. "Silencers for Geothermal Bore Discharge." pp. 134-140 in v. 3 of United Nations (1961).

Dench, N.D., 1970. "Casing String Design for Geothermal Wells." Geothermics, Special Issue 2 (1970) vol. 2, part 2, pp. 1485-1496.

Dobrovolsky, I.A., and E.A. Strikha, 1970. "Study of the phytotoxicity of certain components of industrial air pollution." Ukrains'kyi Botanichnyi Zhurnal, Vol. XXVII, No. 5, pp. 640-644 (In Ukrainian. Available in English translation from this Laboratory as UCRL-Trans-1526).

Dodd, F.J., and W.C. Ham, 1974. "Geysers Geothermal Steam Power Plant Corrosion in Condensate System with Ferric Ion Addition for Hydrogen Sulfide Abatement." Report PG&E 7884-74.

Dodd, F.J., A.E. Johnson and W.C. Ham, 1975. "Material and Corrosion Testing at the Geysers Geothermal Power Plant," pp. 1959-1963 in United Nations (1975).

Duan Fen-Djuy, 1959. "Basic Data for the Determination of the Limit of Allowable Concentration of Hydrogen Sulfide in Atmospheric Air." Gigiena i Sanitaria, 24, 10:12 (1959) (In Russian with English abstract).

Dudlinger, R. Stanford Univ., personal communication.

Eaton, F.M., 1944, "Deficiency, Toxicity, and accumulation of boron in plants." Journal of Agric. Research, Vol. 69, No. 6, pp. 237-277.

EIC Corporation, 1976. "Final Report - Control of Hydrogen Sulfide Emissions at the Geysers Geothermal Power Plant," submitted to PG&E, September 10, 1976.

ENVIROS, 1976. "Meteorological and air quality aspects of geothermal development in Lake County." ENVIROS, Los Altos, California.

ERDA, 1976. "Geothermal Project Summaries; Geothermal Energy Research, Development and Demonstration Program," Chapter 6. Report ERDA 76-53 issued by the Energy Research and Development Administration, Division of Geothermal Energy, Washington, D. C. 20545.

Fabbri, F., and A. Giovannoni, 1970. "Cements and Cementation in Geothermal Well Drilling." Geothermics special issue 2 (1970), vol. 2, part 1, pp. 742-750.

Fabbri, F., and Vidali, M., 1970. "Drilling Mud in Geothermal Wells." Geothermics special issue 2 (1970), vol. 2, part 1, pp. 735-741.

Facca, G., and F. Tonani, 1961. "Natural Steam Geology and Geochemistry." pp. 219-229 in v. 2 of United Nations (1961).

Facca, G., and F. Tonani, 1967. "The Self-sealing Geothermal Field." Bulletin Volcanologique, v. 30, pp. 271-273.

Fairfax, J.P., and H.K. McCluer, 1972. "Hydrogen Sulfide Abatement Geysers Power Plant Progress Report." PG&E Report 7485.3-71.

Ferrara, G.C., C. Panichi, and G. Stefani, 1970. "Remarks on the Geothermal Phenomenon in an Intensively Exploited Geothermal Field. Results of an Experimental Well." pp. 578-586 in Geothermics, v. 2, special issue 2, part 1.

Finney, J.P., 1973. "Design and Operation of the Geysers Power Plant." pp. 145-162 in Kruger and Otte (1973).

Finney, J.P., F.J. Miller and D.B. Mills, 1972. "Geothermal Power Project of Pacific Gas and Electric Company at the Geysers, California." Paper submitted for presentation at the summer meeting of the IEEE Power Engineering Society, July 1972.

Fooks, A.C.L., 1961. "The development of casings for geothermal bore holes at Wairakei, New Zealand." pp. 170-183 in v. 3 of United Nations (1961).

Frye, G., 1975. "Water Entry Below Steam Production: A Case History at the Geysers," Paper No. 41 presented at the Workshop on Geothermal Reservoir Engineering at Stanford University, December 15-17, 1975.

Garrison, L.E., 1972. "Geothermal Steam in the Geysers - Clear Lake Region, California." Geological Society of America Bulletin, v. 83, pp. 1449-1468.

Glebova, L.F., 1949. "Toward the task of determining the maximum permissible concentration of hydrogen sulfide in atmospheric air." Gigiena i Sanit. 6:19 (1949) (in Russian).

Goguel, J., 1953. "La regime thermique de l'eau souterraine." Ann. Min., v. 10, pp. 3-31 (in French).

Goldsmith, J.R. (ed.), 1973. "Final Report: Health and Annoyance Impact of Odor Pollution." EPA Contract 68-02-0083. California Department of Health, Epidemiological Studies Laboratory, Berkeley.

Griffin, D.P., R.O. Dean, and H.K. McCluer, Sr., 1974. "Emission of Noncondensible Gases and Solid Materials from the Power Generating Units at the Geysers Power Plant." PG&E, Dept. of Eng. Res. Report 7485. 16-74.

Gurinov, B.P., 1952. "Limits of Allowable Concentrations of Hydrogen Sulfide in the Atmospheric Air of Inhabited Localities," pp. 46-51 of Ryazanov (1952a).

Harned, H.S., and Davis, R., Jr., 1943. "The Ionization Constant of Carbonic Acid in Water and the Solubility of Carbon Dioxide in Water and Aqueous Salt Solutions from 0° to 50°." J. Amer. Chem. Soc. 65, 2030.

Harvey, W.W., F.C. Brown and M.J. Turchan, 1976. "Control of Hydrogen Sulfide Emission from Geothermal Power Plants." Report COO-2730-2 submitted to ERDA by the EIC Corporation, 55 Chapel Street, Newton, Massachusetts 02158. July 1976.

Hatton, J.W., 1970. "Ground Subsidence of a Geothermal Field During Exploitation," Geothermics, special issue 2, part 2, pp. 1294-96.

Hearn, B.C., J.M. Donnelly, and F.E. Goff, 1975. "Geology and Geochronology of the Clear Lake Volcanics, California." pp. 423-428 in United Nations (1975).

Henderson, Y., and H.W. Haggard, 1943. Noxious Gases, Reinhold Publishing Corp., New York, p. 245.

Hidy, G.M., 1973. "Removal Processes of Gaseous and Particulate Pollutants," pp. 121-176 in Rasool (1973).

Hochstein, M.P., 1975. "Geophysical Exploration of the Kawah Kamojang Geothermal Field, West Java." pp. 1049-1058 in United Nations (1975).

Horne, A.J., 1976. Private communication.

Illinois Institute of Environmental Quality, 1974. "Hydrogen Sulfide Health Effects and Recommended Air Quality Standard," March 1974. Document PB-233 843 available from the National Technical Information Service.

Ingersoll-Rand, no date. "Condenser Design Considerations," a report given to PG&E.

Irvine, T.F., Jr., and J.P. Hartnett (eds.), 1976. Steam and Air Tables in S.I. Units: Including Data for Other Substances and a Separate Mollier Chart for Steam. Hemisphere Publishing Corporation, Washington.

Isherwood, W.F., 1975." Gravity and Magnetic Studies of the Geysers - Clear Lake Geothermal Region, California, USA." pp. 1065-1073 in United Nations (1975).

Jacobson, J.S. and A.C. Hill, 1970. Recognition of air pollution injury to vegetation: A pictorial atlas, Air Pollution Control Association, Pittsburgh, Pennsylvania.

James, R., 1968. "Wairakei and Lardarello: Geothermal Power Systems Compared." New Zealand Journal of Science, v. 11, pp. 706-719.

Jet Propulsion Laboratory, 1975. "Program definition for the development of Geothermal Energy," V. III, Appendix D, California Institute of Technology, Pasadena, Calif., August 29, 1975.

Karolinska Institute, 1970. "Methods for measuring and evaluating odorous air pollutants at the source and in the ambient air"; report of an International Symposium in Stockholm, June 1-5, 1970. Available from the Department of Environmental Hygiene, Karolinska Institute, S-104 01 Stockholm, Sweden. Also published in Nordisk Hygienisk Tidskrift, volume 51, number 2, 1970.

Kartokusumo, W., W.A.J. Mahon, and K.E. Seal, 1975. "Geochemistry of the Kawah Kamojang Geothermal System, Indonesia." pp. 757-759 in United Nations (1975).

Katagiri, K., 1970. "Effect of slotted liner casing in geothermal bores." Geothermics, special issue 2 (1970), v. 2, part 2, pp. 1497-1501.

Katz, S. H. and Talbert, E. J., 1939. "Intensities of Odors and Irritating Effects of Warning Agents for Inflammable Poison Gases," U.S. Bureau of Mines Technical Paper 480, 37 pp., Washington, D. C., 1939. Quoted in California Air Resources Board (1970).

Kendall, D.A., and S.P. Jacobs, 1971. "Physiological Responses to Odorants." Presented at the Symposium, the Dose-Response Relationships Affecting Human Reactions to Odorous Compounds, April 26, 1971, Cambridge, Mass. (A.D. Little, Inc.)

Kendall, D.A., and T. Lindvall (Editors), 1971. "Evaluation of Community Odor Exposure." Report of a Symposium sponsored by Environmental Protection Agency at Arthur D. Little, Inc., Cambridge, Massachusetts, April 26-29, 1971.

Kern, D.M., 1960. "The Hydration of Carbon Dioxide," J. of Chemical Education, 37, 14.

Kruger, P. and C. Otte, 1973. Eds., Geothermal Energy: Resources, Production, Stimulation. Stanford University Press, Stanford, Ca.

Kubicek, P.F., and D.G. Price, 1976. "An Evaluation of Water Temperature and Its Effect on Juvenile Steelhead Trout in Geothermally Active Areas of Big Sulphur Creek - Final Report." Report PG&E 7784.4-75.

Kuwada, J.T., 1973. "Pollution Control for Geothermal Power Plants," AICHE Symposium Series, Vol. 70, No. 136, pp. 772-775.

Larsen, R.I., 1966. "Future Air Quality Standards and Industrial Control Requirements," Proceedings of the Third National Conference on Air Pollution, Washington, D.C., December 1966. Quoted in Miner (1969).

LeGore, R.S., et al., 1975. "The Effects of Geothermal Energy Utilization on Stream Biota and Water Quality at the Geysers, California." Final report submitted to the Union Oil Company Geothermal Division by Parametrix, Inc., Environmental Services Section. Document #75-0731-040FR.

Leonardis, G., D. Kendall and N. Barnard, 1969. "Odor Threshold Determinations of 53 Odorant Chemicals," J. Air Pollution Control Assoc. 19, 2:91 (1969).

Levorsen, A.I., 1967. Geology of Petroleum, 2nd ed. W.M. Freeman and Company, San Francisco.

LFE, 1975." Investigation of the Release of Radon-222, its Daughters, and Possible Precursors at the Geysers Geothermal Field and Surrounding Areas." Final Report submitted to Union Oil Company. LFE Reference No. 16650, March 1975.

Li, C.T., and D.P. Alzheimer, 1976. "Final Report: Removal of H_2S from Geothermal Steam." Report BNWL-2087. Battelle Pacific Northwestern Laboratories, Richland, Washington 99352.

Libster, S.P., 1952. Quoted by Gurinov (1952).

Lister, C.R.B. "Qualitative Theory on the Deep End of Geothermal Systems." pp. 459-463 in United Nations (1975).

Loginova, R.A., 1952. Quoted by Gurinov (1952).

Loginova, R.A., 1957. "Basic Principles for the Determination of Limits of Allowable Concentrations of Hydrogen Sulfide in Atmospheric Air," pp. 52-68 in Ryazanov (1957a).

Lollock, D., 1975. "[California] Department of Fish and Game Statement for Hearing, Subcommittee on Geothermal Resources, State Lands Commission," presented in Public Hearing before the State Lands Commission Subcommittee on Geothermal Resources, Los Angeles, September 17, 1975, and in San Francisco, September 25, 1975.

Magill, P.L., F.R. Holden, and C. Arkley, 1956. Air Pollution Handbook, McGraw-Hill Book Co., New York, N.Y.

Martin, J.C., 1975. "Analysis of Internal Steam Drive in Geothermal Reservoirs," J. Petroleum Technology, pp. 1493-1499, December 1975.

Maurer, W.C., 1968. Novel Drilling Techniques, Pergamon Press, Oxford, England

McCabe, L.C., and G.D. Clayton, 1952. "Air Pollution by Hydrogen Sulfide in Poza Rica, Mexico: An Evaluation of the Incident of November 24, 1950." A.M.A. Archives of Industrial Hygiene and Occupational Medicine, pp. 199-213, Vol. 6, 1952.

McCallan, S.E.A., A. Hartzel, and F. Wilcoxon, 1936, "Hydrogen sulphide injury to plants," Contributions from Boyce Thompson Institute, Vo. 8, No. 3, pp. 189-198.

McColl, J.G., L.M. Gallagher and C.P. Martz, 1976. "The Geochemical Origin of Surface Waters in a Geothermal Area." Presented at the Second Environmental Chemistry and Cycling Symposium at Augusta, Georgia, April 28-30, 1976.

McCray, A.W., and Cole, F.W., 1959. Oil Well Drilling Technology, University of Oklahoma Press, Norman.

McLaughlin, R.J., and W.D. Stanley, 1975. "Pre-Tertiary Geology and Structural Control of Geothermal Resources, The Geysers Steam Field, California." pp. 475-485 in United Nations (1975).

McLaughlin, R., USGS, personal communication.

McNay, J., McCulloch Oil Co., personal communication.

McNitt, J.R., 1963. "Exploration and Development of Geothermal Power in California." Special Report 75, California Division of Mines and Geology, Ferry Building, San Francisco.

Mercado, S., 1975. "Cerro Prieto Geothermoelectric Project: Pollution and Basic Protection," pp. 1385-98 in United Nations (1975).

Mercado, S., 1976. "Cerro Prieto Geothermal Field, Mexico. Wells and Plant Operation." Presented at the International Conference on Thermal Waters, Geothermal Energy and Vulcanism of the Mediterranean Area. Athens, October 5-10, 1976.

Meyer, L.H., 1966. "Deuterium and Tritium," pp. 895-918 of Vol. 6 of the 2nd Edition of the Encyclopedia of Chemical Technology. Interscience Publishers, New York.

Middleton, J.T., E.F. Darley, and R.F. Brewer, 1958. "Damage to vegetation from polluted atmospheres," Journal of the Air Pollution Control Association, Vol. 8, No. 1, pp. 9-15.

Miller, S.G., and R.D. Robuck, 1972. "The Stretford Process at the East Wilmington Field," Journal of Petroleum Technology, Vol. 24, pp. 545-548.

Miner, S., 1969. "Air Pollution Aspects of Hydrogen Sulfide." Report prepared by Litton Systems, Inc., Environmental Systems Division, Bethesda, Maryland for the National Air Pollution Control Administration, September 1969. Available from the National Technical Information Service, Document PB-188-068.

Mohr, G.H., 1973. "Hydraulically operated bent sub offers flexible directional drilling," Oil and Gas Journal, v. 71, no. 49, pp. 55-62.

Naegele, J.A., 1973. Air pollution damage to vegetation, Advances in Chemistry Series 122, American Chemical Society, Washington, D.C.

Nathenson, M., 1975a. "Some Reservoir Engineering Calculations for the Vapor-dominated system at Lardarello, Italy." U.S. Geological Survey Open File Report 75-142. Menlo Park, Ca., April 1975.

Nathenson, M., 1975b. "Physical factors determining the stored energy recoverable from hydrothermal convection systems and conduction dominated areas." U.S. Geological Survey Open File Report 75-525, U.S.G.S., Menlo Park, California 94025.

Neilson, J.A., et al., 1975. "Environmental Impact Analysis - The Geothermal Leasehold of Union Oil Company at the Geysers," Sonoma County, California." Ecoview Environmental Consultants, Napa.

Neilson, J.A., et al., 1976. "A Draft Environmental Impact Report for Phillips Petroleum Co., Borax Lake Study Area, Lake County, Ca." EIR prepared by Ecoview Environmental Consultants of Napa, California.

Northern Sonoma County Air Pollution Control District (NSCAPCD), 1976. "Report on H_2S Air Quality and the Geysers Geothermal Development." NSCAPCD, 421 March Ave., Suite C, Healdsburg, Ca. 95448. January 1976. No report number.

Novakov, T., S.G. Chang and A.B. Harker, 1974. "Sulfates as Pollution Particulates: Catalytic Formation on Carbon (Soot) Particles." pp. 259-261 in Science, Vol. 186.

Oertli, J.J., and H.C. Kohl, 1961. "Some considerations about the tolerance of various plant species to excessive supplies of boron," Soil Science, Vol. 92, pp. 243-247.

Otte, C. and R.F. Dondanville, 1968. "Geothermal Development in the Geysers Area, California." [abs.] Am. Assoc. Petroleum Geologists Bull. v. 52, p. 175.

Pacific Gas and Electric Company, 1975. Amended Environmental Data Statement, Geysers Unit 13.

Panichi, C., 1976. "Utilization of the chemical and isotopic thermometers in evaluating deep temperatures in hydrothermal systems." From the International post-graduate course in geothermics, Instituto Internazionale per le Ricerche Geotermiche, Pisa, Italy.

Panichi, C., R. Celati, P. Noto, P. Squarci, L. Taffi and E. Tongiorgi, 1974. "Oxygen and Hydrogen Isotope Studies of the Lardarello (Italy) Geothermal System", pp. 3-28 in Vol. II, of Isotope Techniques in Groundwater Hydrology, 1974: Proceedings of a Symposium Organized by the International Atomic Energy Agency, held in Vienna 11-15 March 1974. International Atomic Energy Agency, Vienna, 1974.

Papadopulos, S.S., R.H. Wallace, Jr., J.B. Wesselman and R.E. Taylor, 1975. "Assessment of Onshore Geopressured-Geothermal Resources in the Northern Gulf of Mexico Basin". pp. 125-146 in White and Williams, 1975.

Payette, B., M.E. Long and R. Payette, 1974. "An Engineering Case Study – Hydrogen Sulfide Abatement at Pacific Gas and Electric's Geothermal Plant." A report issued by the College of Engineering, University of California, Berkeley. No report number.

Patel, V.C., T.E. Croley and M-S. Cheng, 1975. "Optimum design of Dry-Wet Combination Cooling Towers for Power Plants", pp. 24-57 in Cooling Tower Environment-1974 , the proceedings of a symposium held at the University of Maryland March 4-6, 1974. Technical Information Center Office of Public Affairs, US-ERDA. Report CONF-740302.

Patty, F.A., 1949. Industrial Hygiene and Toxicology, Vol. II. Interscience Publishers, Inc., New York. p. 590.

Pavlov, A., 1969. "Maximum permissible concentrations of harmful substances in the atmospheric air of inhabited places". (Official announcement) Gig. i Sanit. 11:120 (1970). (In Russian).

Pennsylvania Department of Labor and Industry, 1938. "Survey of Carbon Disulfide and Hydrogen Sulphide Hazards in the Viscose Rayon Industry". Bulletin No. 46, Harrisburg.

Peters, S., 1974. "Civil Engineering Features of a Geothermal Power Plant". Presented at the January 21-25, 1974 ASCE National meeting on Water Resources Engineering at Los Angeles, CA.

Petracco, C., and P. Squarci, 1975. "Hydrological Balance of Lardarello Geothermal Region." pp.521-529 in United Nations (1975).

Petroleum Extension Service, 1974. Lessons in Rotary Drilling: A Home Study Course issued by the Petroleum Extension Service, Industrial and Business Training Bureau, Division of Extension, the University of Texas at Austin, in cooperation with the International Association of Drilling Contractors, Dallas, Texas.

Petroleum Extension Service, 1974a. "Controlled Directional Drilling." An unnumbered unit of Petroleum Extension Service (1974). Revised edition. 39 pp.

Petroleum Extension Service, 1974b. "Blowout Prevention." Unit III - Lesson 3 of Petroleum Extension Service (1974). Revised Edition. 74 pp.

Pinsent, B.R.W., L. Pearson, and F.J.W. Roughton, 1956. "The Kinetics of Combination of Carbon Dioxide with Hydroxide Ions". Transactions of the Faraday Society, 52, 1512.

Poda, G.A., 1966. "Hydrogen Sulfide Can be Handled Safely", Arch. Environ. Health, 12, 795 (1966).

Pomeroy, R.D. and H. Cruse, 1969. "Hydrogen Sulfide Odor Threshold," J. Am. Water Works Assoc. 61, 7:677 (1969).

Poland, J.F., 1973. "Subsidence in United States due to ground-water overdraft — a review." Proc. Irrig. and Drainage Div. Specialty Conf., Ft. Collins, Colo., Am Soc. Civil Eng., Aug 22-24, 1973.

Poland, J.F., and G.H. Davis, 1969. "Land Subsidence due to Withdrawal of fluids" in D.J. Varnes and G. Kiersch, eds., Reviews in Engineering Geology Geol. Soc. America, p.187-269, V. II.

Price, D.G., and D.P. Griffin, 1975. "An Evaluation of Stream Water Quality Monitoring Data Collected from May 1968 through May 1975 at the Geysers, and its Implications to the Biological, Chemical, and Physical Environment." Report PG&E 7784.2-75.

Price, D.G., and P.F. Kubicek, 1975. "An Inventory of Fishery Resources in the Upper Putah Creek Drainage - The Geysers Known Geothermal Resource Area Fishery Investigations." Report PG&E 7784.3-75.

Price, D.G. and P.F. Kubicek, 1976. "An Inventory of Fishery Resources in the Kelsey Creek Drainage - The Geysers Known Geothermal Resource Area Fishery Investigations". Report PG&E 7784.5-76.

Price, D.G., B.F. Waters and J.T. Wells, 1975. "Known Geothermal Resource Area Fishery Investigations, 1974." Report PG&E 7784-75.

Proctor, J.F., 1965. "Deuterium" pp.895-909 in Vol. 6 of the "Encyclopedia of Chemical Technology," 2nd Edition, Interscience, New York.

Public Utilities Commission, 1975. Transcript for December 5, 1975, pp.1092-1109, PUC, San Francisco, California.

Public Utilities Commission, 1976. Transcript for February 25, 1975. pp. 1131-1151, PUC, San Francisco, California

Public Utilities Commission, 1975. Transcript for February 26, 1975, pp.1159-1195, PUC, San Francisco, California.

Ralph M. Parsons Company, 1975. "Hydrogen Sulfide Abatement Facilities for Geothermal Power Production Facilities, the Geysers, California." A comparative process study for PG&E. Job No. 5460-1.

Ralph M. Parsons Co., 1976. "Catalytic Hydrogen Sulfide Catalytic Oxygenation (sic) for Geothermal Power Production Facilities, The Geysers, California," a study for PG&E.

Ramey, H.J., Jr., 1968. "A Reservoir Engineering Study of the Geysers Geothermal Field" submitted as evidence, Reich and Reich, Petitioners v. Commissioner of Internal Revenue, 1969 Tax Court of the United States, 52. T.C.No. 74, 1970.

Raschen, R. U.S.G.S., Personal communication.

Raschen, R. and W.S. Cook, 1976. "Exploration and Development of Geothermal Resources". Conservation Division, Office of the Area Geothermal Supervisor, U.S. Geological Survey, Menlo Park, CA. Preliminary report. No report number.

Rasool, S.I. 1973. (Editor of) Chemistry of the Lower Atmosphere, Plenum Press, New York.

Rennet, J.L., D.E. White and D.L. Williams, 1975. "Hydrothermal Convection Systems," pp.5-57 in White and Williams (1975).

Robertson, D.E., E.A. Crecelius, J.S. Fruchter, and J.D. Ludwick, 1976. "Mercury Emissions from Geothermal Power Plants." Presented at the second Geothermal Environment Conference, Konocti Harbor Inn, Lake County, Calif. October 27-29, 1976. Report BN-SA-653. Battelle Northwest Laboratories. Richland, WA 99352.

Roughton, F.J.W., 1941. "The Kinetics and Rapid Thermochemistry of Carbonic Acid." J. American Chemical Society, 63, 2930.

Rubin, H.H., and A.J. Arieff, 1945. "Carbon Disulfide and Hydrogen Sulfide Clinical Study of Chronic Low-Grade Exposures." J. of Ind. Hyg. and Tox. 27, 123 (1945).

Ruff, R.E. and L.A. Cavanagh, 1976. "Quarterly Report Covering Period 1 April to 1 July 1976, SRI Project 4351." (Stanford Research Institute Geysers Area Air Monitoring Program).

Ryazanov, V.A., 1952a. Ed. Limits of Allowable Concentrations of Atmospheric Pollutants, Book 1. Medgiz, Moscow. Translated by B.S. Levine. Distributed by U.S. Dept. of Commerce, Office of Technical Services.

Ryazanov, V.A., 1952b. "Basic Principles of Hygienic Standardization of Atmospheric Air Pollutants", pp.6-21 in Ryazanov (1952a).

Ryazanov, V.A., 1957a. Op. cit., Book 3.

Ryazanov, V.A., 1957b. "New Data Forming the Experimental Basis for Limits of Allowable Concentrations of Atmospheric Pollutants". pp.3-19 in Ryazanov (1957a)

Ryazanov, V.A., K.A. Bushtueva and Yu. V. Novikov, 1957. "Methods for the Determination of Limits of Allowable Concentrations of Atmospheric Air Pollutants", pp.96-128 in Ryazanov (1957a).

Ryazanov, V.A., 1962. "Sensory Physiology as Basis for Air Quality Standards The Approach used in the Soviet Union". Archives of Environmental Health, November 1962, Vol. 5, pp.479-494. Presented at the Fifth California Air Pollution Medical Research Conference, Los Angeles, Dec. 6, 1961.

Sabadell, J.E., and R.C. Axtmann, 1975. "Heavy Metal Contamination from Geothermal Sources", Env. Health Perspectives, 12, pp.1-7.

San Francisco Chronicle, 1975. " 'Rule Doesn't Work' - Researchers Rap Smog Board." November 20.

Schieler, Leroy, 1973. "Relationship between Air Pollution and Human Mental Depression". Presented at the Northwestern Regional Meeting of the Amer. Chem. Soc., Seattle, Washington, 1973.

Schrockengost, M. California Division of Oil and Gas, personal communication.

Scurfield, G., 1960. "Air Pollution and Tree Growth", Forestry Abstracts, Vol. 21, No. 3, pp. 339-347 & Vol. 21, No. 4, pp. 517-528.

Seigel, S.M., and B.Z. Siegel, 1975. "Geothermal Hazards. Mercury Emission" Env. Sci. and Tech. 9, pp.473-474.

Serpa, D.P. and R.W. Lorenz, 1975. "The Determination of the Sources of 210-Pb in Cooling Tower Sludge at the Geysers Power Plant". PG&E Report 7485.22-75.

Serpa, D.P., H.K. McCluer and R.O. Dean, 1974. Measurement of Radon-222 at the Geysers Power Plant." PG&E Report 7485.12-74.

Sestini, G., 1970. "Superheating of Geothermal Steam". Geothermics, v.2, Special Issue 2, part 1, pp.622-648.

Sharp, S.G., 1976. "Preliminary Report: Cooling Tower Drift Residue, the Geysers Power Plant". Report PG&E 7485.27-75.

Shih, T.T.C., B.F. Hrutfiord, K.V. Sarkanen and L.N. Johanson, 1967. "Hydrogen Sulfide Vapor - Liquid Equilibrium in Aqueous Systems as a Function of Temperature and pH", Journal of the Association of the Pulp and Paper Industry (TAPPI), Vol. 50, No. 12, pp.630-633.

Sirs, J.A., 1957. "Electrometric Stopped Flow Measurements of Rapid Reactions in Solution, Part 2 - Glass Electrode pH Measurements". Trans. Far. Soc. 54, 207. This paper presents rate data for the reaction $H^+ + HCO_3^- \rightarrow H_2CO_3 \rightarrow H_2O + CO_2$

Skinner, B.J., D.E. White, J.H. Rose and R.E. Mays, 1967. "Sulfides Associated with the Salton Sea Geothermal Brine", Economic Geology, 62, pp.316-330.

Smith, J.H., 1961. "Casing Failure in Geothermal Bores at Wairakei," pp.254-260 in Vol. 3 of United Nations (1961).

Smith, R.L. and H.R. Shaw, 1975. "Igneous-Related Geothermal Systems", pp.58-83 in White and Williams (1975).

Smith, W.O., 1961. "Mechanism of gravity draining and its relation to the specific yield of uniform sand". U.S. Geol. Survey Prof. Paper 402a, 12p.

Sprague, R.W., 1972. The Ecological Significance of Boron, U.S. Borax Corporation, Anaheim, California.

Sprung, J.L., 1975. "Tropospheric Oxidation of H_2S". Statewide Air Pollution Research Center, University of California, Riverside. No report number.

Stanley, W.D., D.B. Jackson, and B.C. Hearn, Jr., 1973. "Preliminary Results of Geoelectrical Investigations near Clear Lake, California". U.S. Geological Survey, Open File Report.

Stern, A.C., 1968a. Ed., Air Pollution. In three volumes. Academic Press. New York, London.

Stern, A.C., 1968b. "Air Pollution Standards", p. 668 in Chapter 51, Vol. III of Stern (1968a).

Stoker, A.K., and P. Kruger, 1975. "Radon in Geothermal Reservoirs," pp.1797-1803 in United Nations (1975).

Suter, V., 1974 Testimony at PUC hearings for Geysers Unit 12.

Swanson, R.N. and M.L. Mooney, 1973. "Hydrogen Sulfide Survey Geysers Area". A report of the Meteorological Office, Gas Control Department, PG&E. January,1973.

Swe, W. and W.R. Dickinson, 1970. "Sedimentation and Thrusting of Late Mesozoic Rocks in the Coast Ranges near Clear Lake, California." Geological Society of America Bulletin, V.81, pp.165-188.

Teknekron, Inc., 1975. Pollution Releases, Resource Requirements, Cost and Efficiencies of Select New Energy Technologies. 2118 Milvia Street, Berkeley, CA 94704.

Tezcan, A.K., 1975. "Dry steam possibilities in Sarayköy-Kizildere Geothermal Field, Turkey." pp.1805-1813 in United Nations (1975).

Thornton, N.C. and C. Setterstrom, 1940. "Toxicity of ammonia, chlorine, hydrogen cyanide, hydrogen sulphide, and sulphur dioxide gases. III. Green Plants," Contributions from Boyce Thompson Institute, Vol. 11, No. 5, pp.343-365.

Thorpe's Dictionary of Applied Chemistry, 1943. Longmans, Green and Co., London.

Tongiorgi, E., Ed.,1963. Proceedings of a conference on Nuclear Geology on geothermal areas held at Spoleto, Italy. Consiglio Nazionale delle Ricerche, Laboratorio di Geologia Nucleare-Pisa.

Treshow, M., 1965. "Evaluation of vegetation injury as an air pollution criterion," Journal of the Air Pollution Control Association, Vol. 15, No. 6., June 1956 pp.266-269.

Treshow, M., 1970. Environment and plant response, McGraw-Hill Book Co. New York, N.Y.

Truesdell, A.H. and G.A. Frye, 1977. "Isotope Geochemistry in Geothermal Reservoir Studies." Presented at the 47th Annual California Regional Meeting of the Society of Petroleum Engineers of AIME, April 13-15, 1977.

Truesdell, A.H. and B.F. Jones, 1974. "WATEQ, a Computer Program for Calculating Chemical Equilibria of Natural Waters." Jour. Res. U.S. Geol. Survey, 2, 233-248.

Truesdell, A.H. and D.E. White, 1973. "Production of Superheated Steam from Vapor-dominated Reservoirs." Geothermics, 2, 154 (1973).

Turner, T., Republic Oil Co., Personal communication.

United Nations, 1963. Proceedings of the United Nations Conference on New Sources of Energy held in Rome, 1961.

United Nations, 1975. Proceedings of the Second United Nations Symposium on the Development and Use of Geothermal Resources, San Francisco, California, 20-29, May, 1975. Published by the Lawrence Berkeley Laboratory, 1976.

U.S. Public Health Service, 1964. "The Air Pollution Situation in Terre Haute, Indiana, with Special Reference to the Hydrogen Sulfide Incident May-June 1964." A joint report to the City of Terre Haute by U.S. Public Health Service, Division of Air Pollution, and Indiana Air Pollution Control Board, Division of Sanitary Engineering (June 1964).

Urban, T.C., W.H. Diment, J.H. Sass, and I.M. Jamieson, 1975. "Heat Flow at the Geysers, California, USA." pp.1241-1245 in United Nations (1975).

Valfells, A., 1970. "Heavy Water Production with Geothermal Steam," pp.896-900, Geothermics, Special Issue 2, V.2, part 1.

Vasilieva, I.A., 1973. "Effects of Small Concentrations of Carbon Disulfide and Hydrogen Sulfide on the Menstrual Function of Women and the Estrual Cycle of Experimental Animals," Gigiena i Sanit. 7:24 (1973) (In Russian with English abstract.)

Villa, F.P. 1975. "Geothermal Plants in Italy; their Evolution and Problems." pp.2061-2064 in United Nations (1975).

Vollintine, L., J. Sathaye and L. Kunin, 1977. "The Lake County Economy: Potential Socioeconomic Impacts of Geothermal Development." Report LBL-5944.

Vollintine, L. and O. Weres, 1976a. "Public Opinion Concerning Geothermal Development in Lake County, California." Report LBL-4447. March 1976.

Vollintine, L. and O. Weres, 1976b. "Public Opinion in Cobb Valley Concerning Geothermal Development in Lake County, California." Report LBL-5204. June 1976.

Weinberg, C.J., 1975. "Pacific Gas and Electric Company Geysers Geothermal Research and Development," presented at the 1st Geothermal Environmental Seminar, Konocti Harbor Inn, Lake County. November 14 and 15, 1975.

Weissberg, B.G., 1969. "Gold-Silver Ore-Grade Precipitates from New Zealand Thermal Waters," Economic Geology, 64, 95 (1969).

Weissberg, B.G, and M.G.R. Zoble, 1973. "Geothermal Mercury Pollution in New Zealand" Bull. of Envir. Contamination and Toxicology, 9, pp.148-155.

White, D.E., 1970. "Geochemistry Applied to the Discovery, Evaluation, and Exploitation of Geothermal Energy Resources," Geothermics, Vol. 1, Special Issue 2, pp. 58-80.

White, D.E., I. Barnes, and J.R. O'Neil, 1973. "Thermal and Mineral Waters of Nonmeteoric Origin, California Coast Ranges." Geol. Soc. Amer. Bull. 84, 574-560. (1973).

White, D.E., L.J.P. Muffler and A.H. Truesdell, 1971. "Vapor-Dominated Hydrothermal Systems Compared with Hot-Water Systems," Economic Geology, 66, 75 (1971).

White, D.E. and C.E. Roberson, 1962. "Sulphur Bank, California a Major Hot-Spring Quicksilver Deposit," pp.397-428 in Petrologic Studies: A Volume to Honor A.F. Buddington, the Geological Society of America, (1962).

White, D.E., and D.L. Williams, 1975. Eds., "Assessment of Geothermal Resources of the United States - 1975." U.S. Geological Survey Circular 726 ("Free on application to the U.S. Geological Survey, National Center, Reston, VA. 22092")

Wilby, F.V., 1969. "Variation in Recognition Odor Threshold of a Panel," J. Air Pollution Control Assoc. 19, 2:96 (1969).

Willey, L.M., J.R. O'Neil and J.B. Rapp, 1974. "Chemistry of Thermal Waters in Long Valley, Mono County, California," U.S. Geological Survey Open-File Report, January 1974, Menlo Park, California.

Wilson, S.H., 1955. N.Z. Dep. Sci. Ind. Res. Bull. 117, 27 (1955).

Wilson, J.S., 1973. "Environmental Aspects of the Multi-Purpose Development of Geothermal Resources," pp.782-787 in Water 1973, AICHE Symposium Series, No. 136, Vol. 70.

Yant, V.P. 1930. "Hydrogen Sulfide in Industry-Occurrence, Effects and Treatment," Amer. J. of Public Health, 20, No. 6 (1930). Quoted in CARB (1970).

Zaba, J. and W.T. Doherty, 1956. Practical Petroleum Engineers' Handbook Gulf Publishing Co., Houston, Texas. pp.443-446.

Zancani, C.F.A., 1975. "Summary of Thirty Years Experience in Selecting Thermal Cycles for Geothermal Plants." pp.2069-2074 in United Nations (1975).

☆U.S. GOVERNMENT PRINTING OFFICE: 1978 -740 -206/ 1070