0 0 0 0 4 7 0 6 6 8

LBL-5966 c.1
UC-4

Lawrence Berkeley Laboratory
UNIVERSITY OF CALIFORNIA

ENERGY & ENVIRONMENT DIVISION

RECEIVED
LAWRENCE
BERKELEY LABORATORY
DEC 4 1979
LIBRARY AND
DOCUMENTS SECTION

COMPOSITION AND UTILIZATION OF CELLULOSE FOR CHEMICALS FROM AGRICULTURAL RESIDUES

A. F. Sciamanna, R. P. Freitas, and C. R. Wilke

December 1977

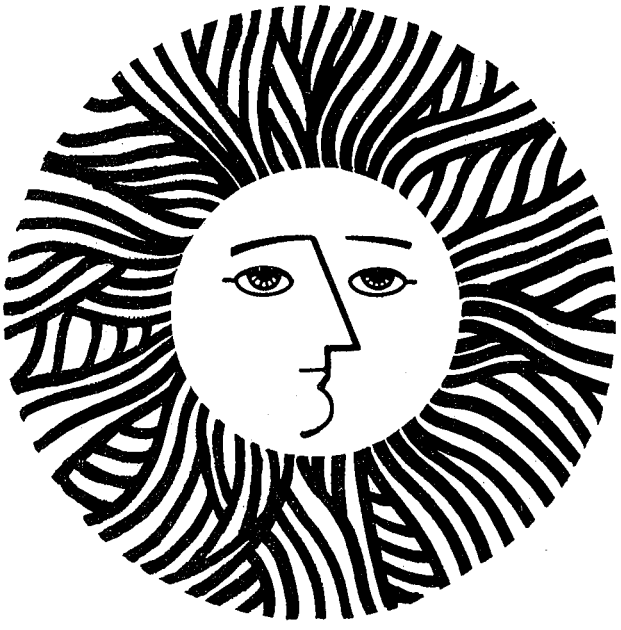

For Reference

Not to be taken from this room

LBL-5966 c.1

Prepared for the U.S. Department of Energy under Contract W-7405-ENG-48

LEGAL NOTICE

This report was prepared as an account of work sponsored by the United States Government. Neither the United States nor the United States Department of Energy, nor any of their employees, nor any of their contractors, subcontractors, or their employees, makes any warranty, express or implied, or assumes any legal liability or responsibility for the accuracy, completeness or usefulness of any information, apparatus, product or process disclosed, or represents that its use would not infringe privately owned rights.

Printed in the United States of America
Available from
National Technical Information Service
U.S. Department of Commerce
5285 Port Royal Road
Springfield, VA 22161
Price Code: A03

0 0 0 0 4 7 0 6 6 9

LBL-5966

COMPOSITION AND UTILIZATION OF CELLULOSE FOR CHEMICALS FROM AGRICULTURAL RESIDUES

BY

A.F. Sciamanna
R.P. Freitas
C.R. Wilke

December 1977

0 0 0 0 4 7 0 6 6 7 0

This study was undertaken for several reasons. Firstly, because of the scarcity of data on the composition of certain agricultural residues generated predominantly in California, it could only be inferred from the published composition of agricultural grains and wood what the carbohydrate composition of the residue straw, stems and roots might be (1,2,3). Published methods of analysis (4-11) on wood and grains were adapted or modified to suit these materials, resulting in an analytical system applicable to these residues (12).

Secondly, a series of chemical pretreatments were studied to see if sugar production by enzymatic hydrolysis might be improved (13,-16, 19). Also these studies are used as a basis of generating the data for chemical engineering parameters of the Berkeley process.

These pretreatments are suggested by the common hydrolysis techniques practiced by the wood pulp and paper industry. Of these, treatment by strong acid solutions at elevated temperatures or by steam (2,17,18), are economically practicable, with marketable side products. The concept attempted here, in the chemical pretreatment for pentosan extraction and/or delignification, was a moderate approach for the obvious economic reasons of process equipment capitalization and operational costs.

Since lignin is ultimately used as a feed back energy source in the Berkeley process, it is not necessary for it to be in the form of a relatively low weight polymer. Therefore, a study on the use of recoverable chemical solvents for dilignification by solution, rather than by a depolymerization reaction is indicated.

SOURCES OF CALIFORNIA AGRICULTURAL RESIDUES

Approximately 8 KG of each of the residues #1 to #6 were obtained via the courtesy of John Prato, Department of Agronomy and Brian Horsfield, Department of Agricultural Engineering, University of California, Davis, California.

1.	Wheat straw	"Triticum Aestivum-L., em-Thell." Grown in Yolo County, Ca., Fall of 1975 crop.
2.	Barley straw	"Hordeum Vulgare-L.," from Yolo County, Ca., Fall 1975
3.	Rice straw	"Oryza Sativa-L.," from Butte County, Ca., Fall 1975
4.	Rice hulls	"Oryza Sativa-L." from Butte County, Ca., Fall 1974
5.	Sorghum	"Bicolor Moench-L." from U.C. Davis Campus, Ca., Fall 1975
6.	Corn stover	"Zeamays-L." from Sacramento County, Ca., Fall 1975

2 1/2 Kg of residue #7 was obtained via the courtesy of Bill Rockwell at USDA, Western Regional Lab., Albany, Ca. and was from the Cotton Experimental Station at Shafter, Ca.

7.	Cotton gin trash	"Gossypium Hirsutum-L." Grown in Kern County, Ca., Summer 1974

Residue Preparation

Approximately 5 Kg of of each agricultural residue was air dried to less than 12% moisture content to facilitate the milling operation. The material was evenly spread out in 2-inch high, 2-ft by 3-ft aluminum trays. The corn stover, having large diameter stalks and a soft moist core, required

approximately two weeks to sufficiently dry out even after they were cut into approximately 15 cm lengths and split open lengthwise.

The material was then milled with a Wiley mill containing a 2 mm screen (A. Thomas Co., Philadelphia, Model E D-5). The milling operation was done in approximately 1/2 Kg loads, whereby, generally, the mill body temperature, as measured with a metered copper-constantin thermocouple inserted in the stationary blade housing, would rise to 45°C. (The rotating blade assembly was somewhat hotter.) The milling was then stopped and the mill allowed to cool to room temperature with a stream of compressed air directed into the opened rotating and stationary blade assembly, and then the milling was resumed.

The milled material was then homogenized by mannually stirring and then tumbling in a inflated 22 gallon plastic bag. The milled material was again spread out in 1cm thick layers in the previously described aluminum trays to equilibrate the mositure content at ambient room humidity of approximately 42% wet/dry - H. After 5 days with occasional turning over of the material, the milled residue was then bottled in 3.5 liter wide mouth jars. The moisture content of these materials varied from 7 to 12%.

The composition of each was determined as described (12), and are shown in Table 1.

Enzymatic Hydrolysis

The hydrolyses were performed in 600 ml Berzelius beakers (without pouring spout). The cap was a number 14 rubber stopper with a 1/2 inch diameter center hole containing a 1/4-inch diameter holed nylon or teflon bushing to accommodate a vertical 3-bladed plastic coated stirring shaft. There was an additional 1/2-inch diameter hole off center for access to sample the hydrolyzate and/or suspension.

Table 1

Composition of California Agricultural Residues

MATERIAL[A]	ASSAY[C] CARBOHYDRATES GLUC[B]	MANN	GALAC	XYL	ARAB	LIGN	ASH	AZEO. BZ/EtoH EXT.	ACID INSOL.	OTHER
BARLEY STRAW	37.5	1.26	1.71	15.0	3.96	13.8	10.8	9.7	2(±1)	-
CORN STOVER	35.1	0.25	0.75	13.0	2.8	15.1	4.3	5.5	1(±1)	4 Protein
COTTON GIN TRASH	18.0	1.9	0.1	4.0	2.0	17.6	14.8	8.3	2(±1)	4 Amine/ Protein
RICE HULLS	32.5	2.7	0.1	12.3	2.6	19.4	20.1	2.0	1(±1)	
RICE STRAW	36.9	1.6	0.4	13.0	4.0	9.9	12.4	4.4	2(±1)	
SORGHUM STRAW	32.5	0.8	0.2	15.0	3.0	14.5	10.1	6.2	1(±1)	1 Protein
WHEAT STRAW	32.9	0.72	2.16	16.9	2.11	14.5	9.6	7.2	3(±1)	3 Protein

(A) 2mM Wiley Milled, 40-60 mesh fraction (0.25 to 0.35 mM), and 100% dry.

(B) Wgt.% Glucan, Mannan, Galactan, Xylan, Arabinan, Lignin, Azeotropic Benzene Alcohol Extractives, Acid Insoluble Material.

(C) Average of 3-5 Det'm.

0 0 0 0 4 7 0 6 7 2

The beakers were immersed to within 1.5 inches of the top of the beakers in a thermostated, 20 gal. water bath. The in house fabricated bath is equipped with 10-geared vertical stirrers (TALBOY Eng. Co., Emerson, N.J., Model 102) and have variable drives of 50 to 500 rpm. Additionally, it is equipped with 10 magnetic stirrers for bottom stirring and or sterile hydrolyses.

The 16-liter batch of cellulase enzyme used in these experiments was obtained from the fungus Trichoderma viride QM 9414. The cellulase had a filter paper activity of 3.8, which is equal to 0.19 I.U. of glucose and 0.68 I.U. of cellobiose produced per ml of enzyme. The β-glucosidase activity was 0.14 I.U. of glucose produced per ml of enzyme. The C_x activity was 0.4 mg of glucose produced per ml of enzyme per hour. The C_1 activity was 0.36 mg glucose and 0.08 mg of cellobiose produced per hour per ml of enzyme.

The 5 wt% suspensions (12.5 gm substrate to 237.5 gm of cellulase enzyme solution) were stirred at approximately 150 rpm for 48 hours. The mixtures were sampled at 20, 40 and 48 hour intervals. With all of the substrates tested except sorghum, the hydrolyses were generally 95% complete within 40 hours, that is, the rate of production of reducing sugar approached zero. It appears that with sorghum, the rate of sugar production after 48 hours was still approximately 10 mg/gm substrate-hr, whereas the others were less than 0.8 mg/gm-hr.

After a maximum of 48 hours, the suspension was cooled in an ice bath and then vacuum filtered through a double layer of 7 cm diameter Whatman GFA (glass fiber) filter paper in a Buchner funnel. The volume and weight of the liquor was determined and the difference missing from the original amount of liquid used was the basis for the volume of water for the first wash of the residue. The first wash was later combined with the liquor.

Admittedly this is not a quantitative recovery of entrapped sugar and liquid in the residue. The first wash generally contained approximately 10% of the sugar concentration that was in the liquor. A maximum of four additional water washes each equal in amount to the first, were required to reduce that to less than 1% sugar.

The combined hydrolyzate and first wash were preserved at 3°C for further chemical analysis of composition.

The residue was freeze-dried at room temperature with a commercial freeze dryer (Virtis Research Equip. Co., Gardiner, N.Y., Model 10-310) operated with a -60°C refrigerated trap. The fore pump, capable of 10 μm vapor pressure, was a Welch Duo Seal, (Model 1402). The loss in weight (100% dry) served as a basis for material balance determination.

The rate of sugar production was tracked colorimetrically with 3,5-dinitro salicylic acid reagent (DNS) and served only as a relative measure and not as a quantitative determination. The 3 ml sample removed during hydrolysis was transferred directly into 12 ml centrifuge tubes and centrifuged for approximately 5 minutes at 10 K RPM. 1 ml of supernate was then appropriately diluted, and then a 1 ml aliquot was used for the colorimetric determination.

The composition of these hydrolyzates were determined as described (12) and a brief summary of the results is shown in shown in table 2.

Acid Pretreatment--Pentosan Extraction:

The acid pretreatment of these agricultural residues were derived from the treatment described by Dunning and Lathrop (2). The solids to liquid ratio by weight varied from 6:100 to 8.5:100.

Generally, one liter of 0.09 molar sulfuric acid (0.9 w/w%) was used. 60 to 85 GM of milled substrate was added to the boiling acid contained in a 3-liter round bottom, three necked flask heated with a Glass-Col heater.

Table 2

Yield of Sugars from Enzyme Hydrolysis (5w% Suspension) of Original Material
Basis: 100 lb. of Original Material Wiley Milled

MATERIAL	GLUC.*	POLY GLUC.	XYL.	ARAB.	G&P CONV. (%)	PENTOSE CONV. (%)	TOTAL SUGAR CONVERSION (%)
Barley	7.0	0.8	3.05	0.81	18.8	17.9	17.7
Corn Stover	11.2	0.5	3.01	0.62	30.1	25.7	26.4
Cotton Gin Trash	5.3	0.5	0.03	0.01	29.2	0.6	20.1
Rice Hulls	5.3	0.3	0.33	0.08	15.8	2.5	10.9
Rice Straw	17.5	0.01	2.55	0.84	42.7	17.6	33.4
Sorghum Straw	10.5	0.5	1.08	0.51	30.5	7.8	21.9
Wheat Straw	8.9	0.01	2.45	0.56	24.4	15.7	19.4

*Abbreviations for the sugars, polyglucose is mainly cellobiose.

One of the side necks was fitted with a 46 cm long water cooled condenser, the other used as an addition and sampling port. The center neck was fitted with a paddle stirrer driven by a geared Bodine Motor (Bodine Electric Co., Chicago, Ill.--type NSE-11R, geared 10:1, 1.4 in-lbs torque). The mixture was stirred at 40 to 50 rpm, at 100°C for 5 1/2 hours.

The rate of reducing sugar production was tracked colorimetrically on 3 ml samples with a bulb operated inverted 5 ml pipette. The samples were centrifuged at 10K-rpm for 5 to 10 minutes and 1 ml of supernate was appropriately diluted and a 1 ml aliquot used to determine the sugar with the DNS reagent. After 5 1/2 hours, the mixture was then cooled in an ice bath and the suspension was transferred to a 2-liter beaker. 100 ml of water was used in small portions to wash the stirrer and flask into the beaker. The acid mixture was then neutralized with standard 10.00 N sodium hydroxide to a pH = 7 (measured with pH meter) while being magnetically stirred. In this manner the consumption of hydrogen ion was determined. Cotton gin trash and sorghum exhibited considerable acid usage. Of course, in an industrial process the acid liquor would not be neutralized but made up when necessary and recycled on at least two additional batches of milled material.

The neutralized suspension was then vacuum filtered to near dryness in a (15 cm. I.D.) Buchner funnel containing a Whatman #42 filter paper.

The volume and weight of the liquor obtained was determined for material balance. The volume of first wash (later combined with the liquor) added to the collected solid was equal to the amount of liquor entrapped by the solid. The first wash, as usual, contained a concentration approximately 10% of the sugar concentration found in the liquor. A 250 ml sample was removed from the combined liquor and first wash for chemical analysis and the balance frozen at -37°C. The collected solid was then washed with four 500 ml

portions of water stirred into the solid, each of which was filtered off before the following wash. It was found that four washes were necessary to reduce the apparent sugar concentration to 1% of the liquor sugar content.

The solid was then transferred quantitatively to a tared 150 x 75 mm crystallizing dish and freeze dried for at least 36 hours and the loss in weight then determined. (Multiple 0.5 gram samples of these freeze dried materials dried again at 110°C for 12 hours showed no further loss in weight indicating that, generally, freeze drying effects 100% dryness in the time allotted.)

A 10 gram sample was removed for composition analysis, shown in table 3, and the remainder served as substrate for enzymatic hydrolysis and further pretreatment with alkali.

Alkali Treatment of Acid Treated Material:

The concept of alkali treatment on agricultural residues to effect delignification was derived from work reported by Toyama and Ogawa (16). However, they did not report the considerable consumption of hydroxide (on rice straw) that was observed in this work, as well as all of the other residues.

Since boiling alkali solutions absorb carbon dioxide readily from the atmosphere a simple closed system was devised. A magnetically stirred, 2-liter conical flask was fitted with a 46 cm long water-cooled condenser. On top of the condenser was placed an obliquely mounted downward 10 cm x 2.5 cm carbon dioxide absorption tube containing Ascarite. Typically, 500 ml of 0.25 molar sodium hydroxide (1 w/w%) was boiled and stirred with a magnetic hot plate. The condenser was removed from the neck of the flask and the acid treated substrate was quickly added. Foaming occurred in the mixture within a few minutes requiring the addition of a few drops of silicone antifoam agent

Table 3

Composition of Solid Materials

Material	Components as % dry weight					
	Ash	Extractives	Lignin	Acid Insolubles	Glucan	Pentosans
UCD Barley Straw	10.8±.2	9.7±.2	13.8±.3	2±1	37.5	18.9
Acid Treated	6.9±.1	3.8±.2	21.1±.4	1±1	54	17.5
Acid-Base Treated	8.4±.2	2.6±.2	8.7±.2	3±1	65	20.2
UCD Corn Stover	4.3±.1	5.5±.3	15.1±.3	1±1	35	15.8
Acid Treated	4.2±.1	7.2±.3	18.8±.4	1±1	51	4.6
Acid-Base Treated	4.6±.1	2.7±.2	4.2±.1	3±1	75	6.2
USDA Cotton Gin Trash	14.8±.2	8.3±.3	18.0±.4	2±1	18	6.0
Acid Treated	13.2±.2	8.5±.3	26.0±.5	2±1	25	8.0
Acid-Base Treated	13.1±.2	8.8±.3	28.0±.5	3±1	35	10.7
UCD Rice Hulls	20.1±.3	2.0±.2	19.4±.4	1±1	32.5	15.0
Acid Treated	23.8±.3	2.9±.2	21.8±.4	2±1	38	8.4
Acid-Base Treated	28.4±.3	2.1±.2	18.8±.4	1±1	44	9.2
UCD Rice Straw	12.4±.2	4.4±.2	9.9±.2	2±1	37	16.7
Acid Treated	15.3±.2	5.8±.3	11.7±.3	2±1	51	7.5
Acid-Base Treated	5.9±.1	8.3±.3	6.7±.2	2±1	71	9.9
UCD Sorghum Straw	10.1±.2	6.2±.3	14.5±.3	1±1	32.5	18.0
Acid Treated	9.4±.2	6.9±.3	17.0±.4	1±1	45	13.7
Acid Base Treated	13.2±.2	5.3±.2	6.1±.2	2±1	58	18.5
UCD Wheat Straw	9.6±.2	7.2±.3	14.5±.3	3±1	33	17
Acid Treated	7.9±.2	3.8±.2	20.0±.4	1±1	47	9.0
Acid-Base Treated	8.1±.2	2.5±.2	11.1±.3	4±1	61	11.3

0 0 0 0 4 7 0 6 6 7 5

(General Electric Antifoam-60, silicone emulsion). Boiling was continued for three hours, and approximately every 1/2 hour a drop of antifoam was added to break the considerable foam that developed. The solids to liquid ratio by weight varied from 6.2:100 to 8.4:100.

At the end of the reaction time the flask, with the condenser still attached, was placed in an ice bath and cooled to room temperature. The slurry was quickly transferred quantitatively into a 1 1/2 liter beaker and titrated with standard acid (2.5 N), while being magnetically stirred, to a pH = 7 as measured with a Beckman pH meter. The consumption of the hydroxide was thus determined and varied from 40% in the case of rice straw to 63% with corn stover. Of course, if this treatment is utilized in a closed system production, the hydroxide liquor would not be neutralized but made up to original concentration and recycled until the liquor is saturated with lignin.

The neutralized suspension was vacuum filtered in a (15 cm dia.) Buchner funnel containing a Whatman #42 filter paper. These viscous dark brown liquors were difficult to filter. Filtering the hot liquors did not improve the operation because the solids were, best described as slimy. It was necessary to wash the solid (in all cases) with four 500 ml portions of hot water, generally the last filtrate wash was pale yellow in color. None of the washes indicated the presence of reducing sugars, though the liquors of all substrates showed the presence of variable small amount (< 1%) of polymeric hexoses and considerable amounts of dissolved lignin. A 250 ml portion of the liquor was refrigerated at 3°C for later composition analysis and the remainder stored frozen at -37°C.

The solid was transferred to a crystallizing dish and freeze dried and the weight loss determined. An 10 gram sample was removed for composition analysis, shown in table 3, and 12.5 gram portions of the remainder served as substrate

for enzymatic hydrolysis.

RESULTS AND DISCUSSION

With a dependent variable system as devised, the distribution of compounds produced as a result of the various pretreatemnts and subsequent enzymatic hydrolysis are best shown as Figures 1 to 7, inclusive. The units are dry weight and are based on an original amount of 100. Only those compounds significant to this study are shown. Since some of the compounds occur as sugars after the indicated treatment, and determined as such, all precursors are shown as their equivalent sugars. As a consequence, if all of the constituents were shown, the sums would exceed 100, and the maximum being approximately 114%. The conversion factors used for the pentosans to the pentoses (arabinose, xylose, etc. is 1.1364, for anhydrodipentose to xylobiose it is 1.0638, for hexosans to hexoses (glucose, mannose, galactose, etc.) is 1.1111, for anhydrodihexose to cellobiose, it is 1.0526, for anhydrotrihexose to cellotriose it is 1.0714. The composition of liquors and washes are listed as total dry weight of dissolved substances, rather than as concentration and volume, because both parameters were variable. For example, in Figure 1 the 41.0 grams of glucose in original barley is actually 37.5 grams of glucan and is shown as 37.5% in table 3. The 39.0 grams of glucose in the 65.31 grams of acid treated material is actually 35.1 grams of glucan and appears as 54% glucan in table 3. Continuing the example on barley, the 13.0 grams of glucose shown appearing in the enzymatic hydrolyzate is the glucose content within 16.35 grams of dissolved substances in a total weight of 1257 grams of hydrolyzate liquor. This is the result if 65.31 grams of acid treated barley had been hydrolyzed with 1241 grams (1235 ml) cellulase enzyme solution (a 5 w/wt% suspension reacted for 40 hours).

The compound polymerized glucose is defined as glucose which is polymerized with itself or other sugar units in dimer to higher forms. (Polymerized xylose and polymerized arabinose are defined in a similar manner.)

0 0 0 0 4 7 0 6 6 7 6

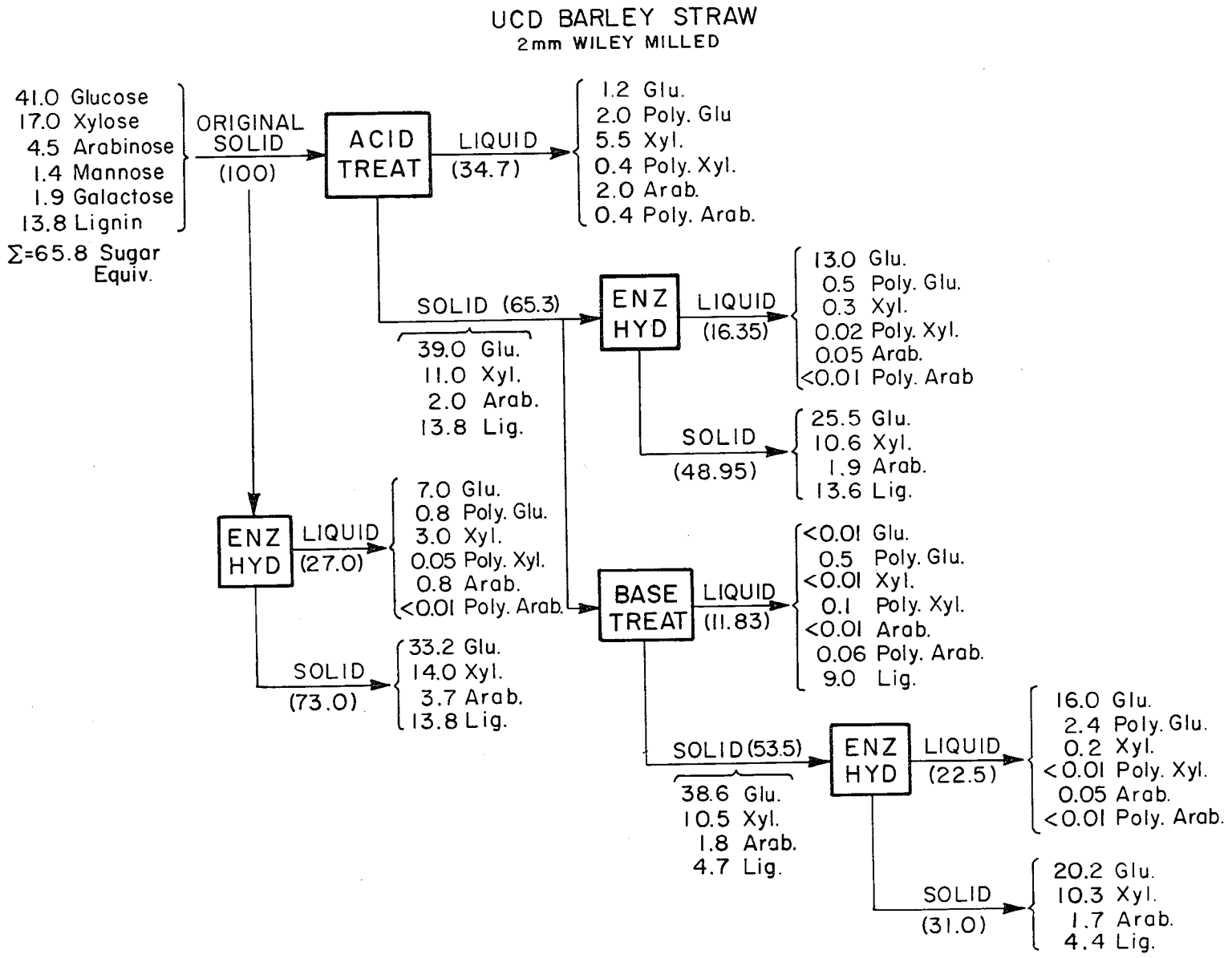

Figure 1

XBL795-6326

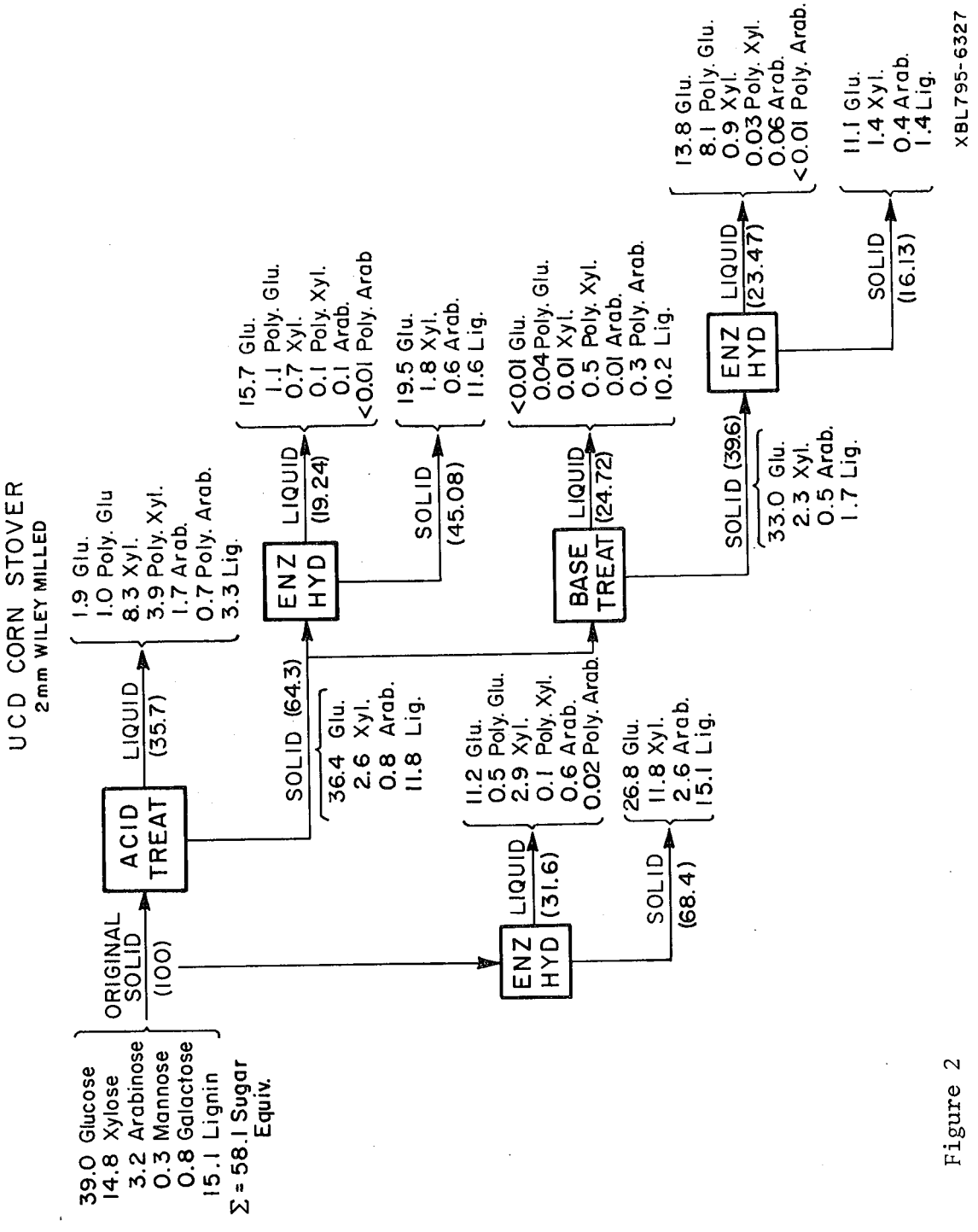
UCD CORN STOVER
2mm WILEY MILLED
39.0 Glucose
14.8 Xylose
3.2 Arabinose
0.3 Mannose
0.8 Galactose
15.1 Lignin
Σ = 58.1 Sugar Equiv.
ORIGINAL SOLID (100)
ACID TREAT
LIQUID (35.7)
1.9 Glu.
1.0 Poly. Glu
8.3 Xyl.
3.9 Poly. Xyl.
1.7 Arab.
0.7 Poly. Arab.
3.3 Lig.
SOLID (64.3)
36.4 Glu.
2.6 Xyl.
0.8 Arab.
11.8 Lig.
ENZ HYD
LIQUID (19.24)
15.7 Glu.
1.1 Poly. Glu.
0.7 Xyl.
0.1 Poly. Xyl.
0.1 Arab.
<0.01 Poly. Arab
SOLID (45.08)
19.5 Glu.
1.8 Xyl.
0.6 Arab.
11.6 Lig.
ENZ HYD
LIQUID (31.6)
11.2 Glu.
0.5 Poly. Glu.
2.9 Xyl.
0.1 Poly. Xyl.
0.6 Arab.
0.02 Poly. Arab.
SOLID (68.4)
26.8 Glu.
11.8 Xyl.
2.6 Arab.
15.1 Lig.
BASE TREAT
LIQUID (24.72)
<0.01 Glu.
0.04 Poly. Glu.
0.01 Xyl.
0.5 Poly. Xyl.
0.01 Arab.
0.3 Poly. Arab.
10.2 Lig.
SOLID (39.6)
33.0 Glu.
2.3 Xyl.
0.5 Arab.
1.7 Lig.
ENZ HYD
LIQUID (23.47)
13.8 Glu.
8.1 Poly. Glu.
0.9 Xyl.
0.03 Poly. Xyl.
0.06 Arab.
<0.01 Poly. Arab.
SOLID (16.13)
11.1 Glu.
1.4 Xyl.
0.4 Arab.
1.4 Lig.
XBL795-6327

Figure 2

0 0 0 0 4 7 0 6 6 7 7

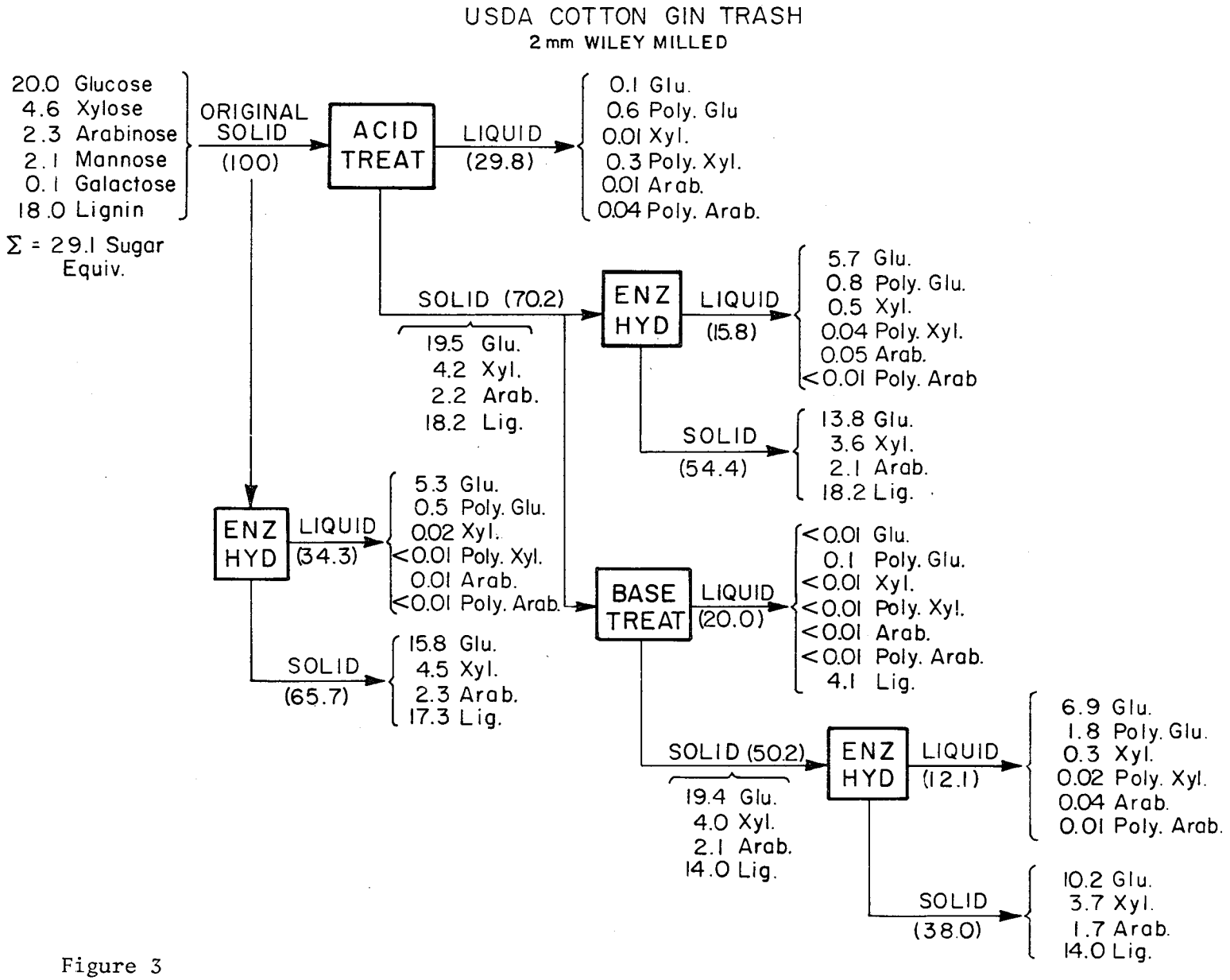

Figure 3

XBL 795-6328

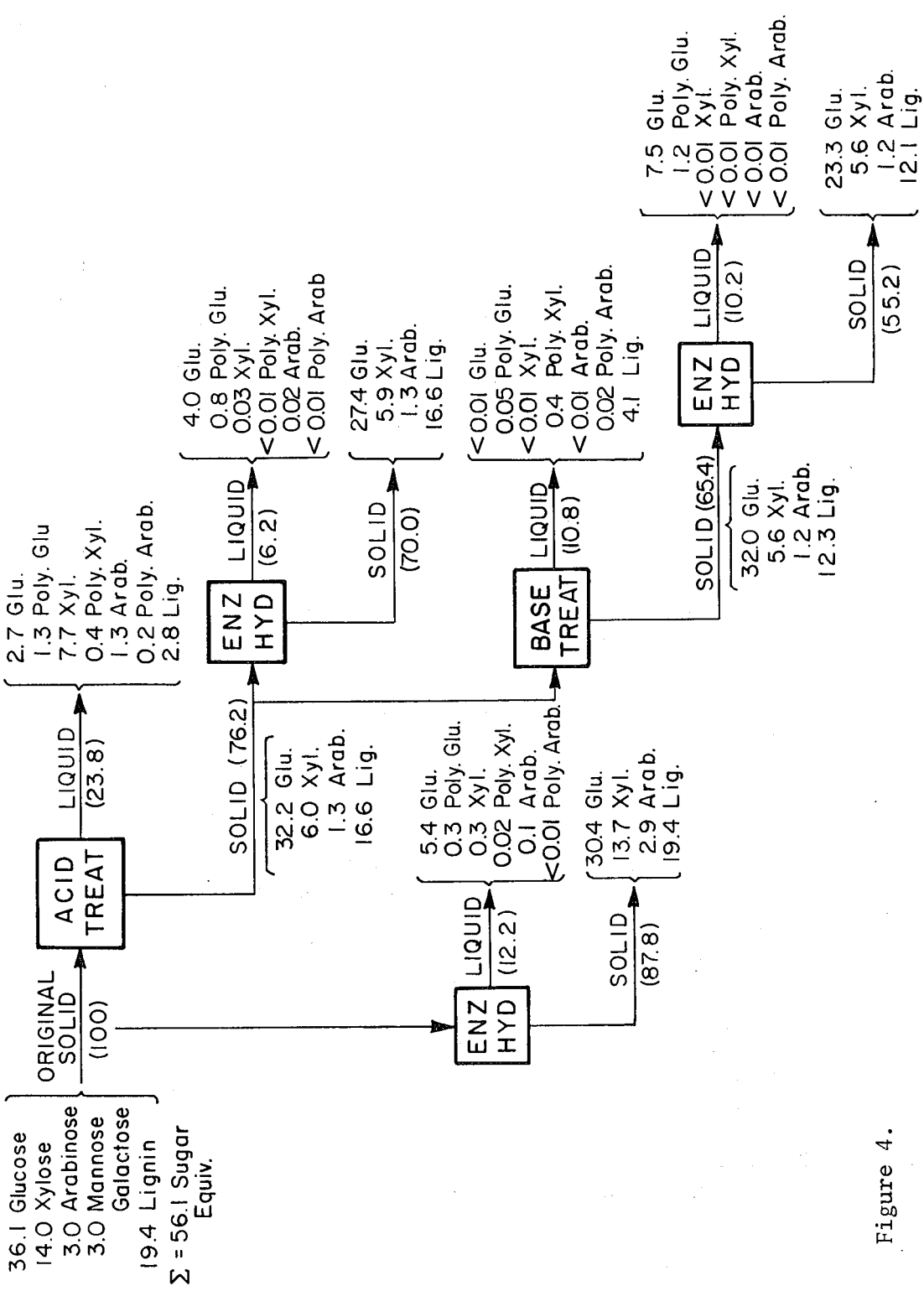
UCD RICE HULLS
2mm WILEY MILLED
36.1 Glucose
14.0 Xylose
3.0 Arabinose
3.0 Mannose
Galactose
19.4 Lignin
Σ = 56.1 Sugar Equiv.
ORIGINAL SOLID (100)
ACID TREAT
LIQUID (23.8)
2.7 Glu.
1.3 Poly. Glu
7.7 Xyl.
0.4 Poly. Xyl.
1.3 Arab.
0.2 Poly. Arab.
2.8 Lig.
SOLID (76.2)
32.2 Glu.
6.0 Xyl.
1.3 Arab.
16.6 Lig.
ENZ HYD
LIQUID (6.2)
4.0 Glu.
0.8 Poly. Glu.
0.03 Xyl.
<0.01 Poly. Xyl.
0.02 Arab.
<0.01 Poly. Arab
SOLID (70.0)
27.4 Glu.
5.9 Xyl.
1.3 Arab.
16.6 Lig.
ENZ HYD
LIQUID (12.2)
5.4 Glu.
0.3 Poly. Glu.
0.3 Xyl.
0.02 Poly. Xyl.
0.1 Arab.
<0.01 Poly. Arab.
SOLID (87.8)
30.4 Glu.
13.7 Xyl.
2.9 Arab.
19.4 Lig.
BASE TREAT
LIQUID (10.8)
<0.01 Glu.
0.05 Poly. Glu.
<0.01 Xyl.
0.4 Poly. Xyl.
<0.01 Arab.
0.02 Poly. Arab.
4.1 Lig.
SOLID (65.4)
32.0 Glu.
5.6 Xyl.
1.2 Arab.
12.3 Lig.
ENZ HYD
LIQUID (10.2)
7.5 Glu.
1.2 Poly. Glu.
<0.01 Xyl.
<0.01 Poly. Xyl.
<0.01 Arab.
<0.01 Poly. Arab.
SOLID (55.2)
23.3 Glu.
5.6 Xyl.
1.2 Arab.
12.1 Lig.
XBL795-6329A

Figure 4.

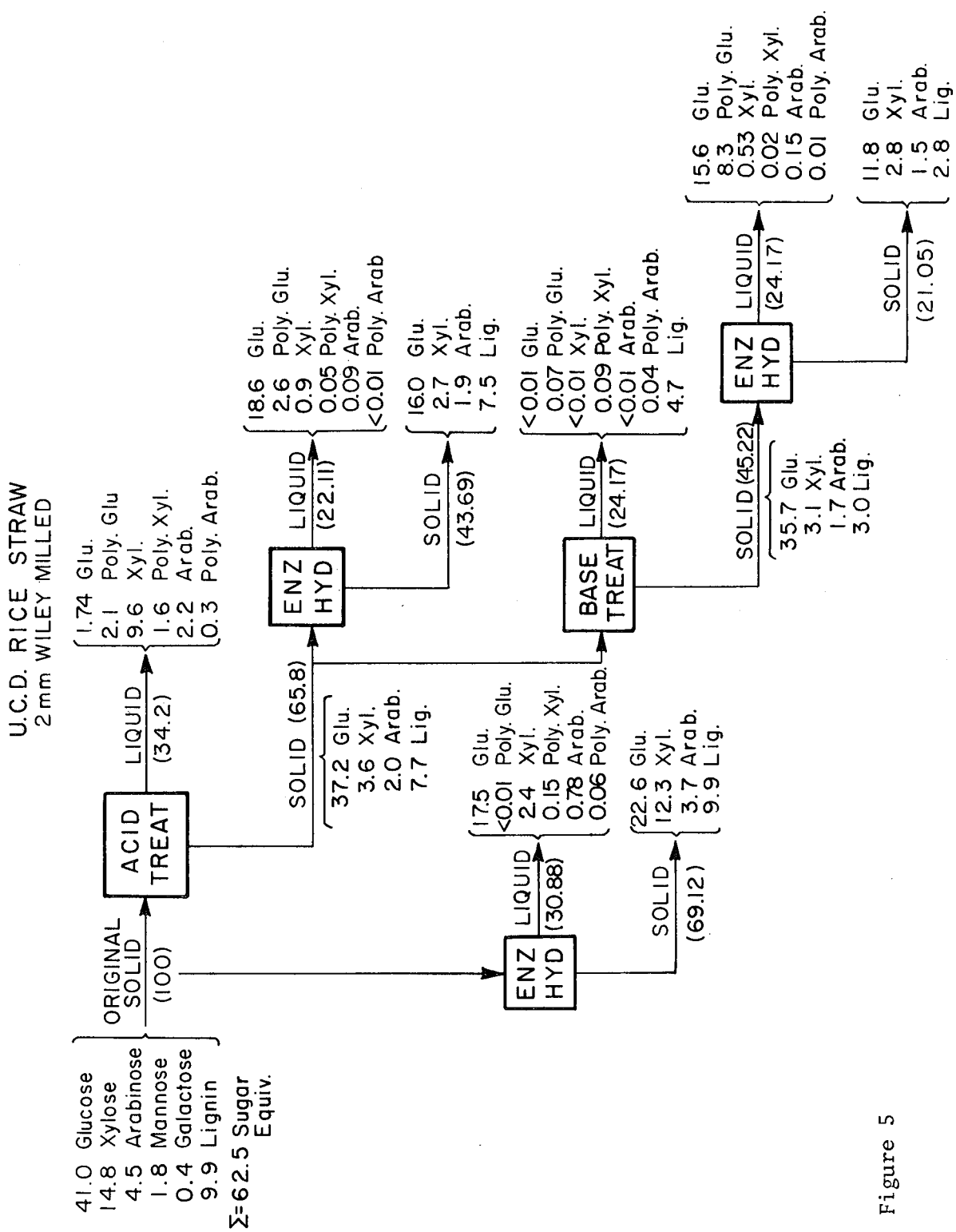
U.C.D. RICE STRAW
2mm WILEY MILLED
41.0 Glucose
14.8 Xylose
4.5 Arabinose
1.8 Mannose
0.4 Galactose
9.9 Lignin
Σ=62.5 Sugar Equiv.
ORIGINAL SOLID (100)
ACID TREAT
LIQUID (34.2)
1.74 Glu.
2.1 Poly. Glu
9.6 Xyl.
1.6 Poly. Xyl.
2.2 Arab.
0.3 Poly. Arab.
SOLID (65.8)
37.2 Glu.
3.6 Xyl.
2.0 Arab.
7.7 Lig.
ENZ HYD
LIQUID (22.11)
18.6 Glu.
2.6 Poly. Glu.
0.9 Xyl.
0.05 Poly. Xyl.
0.09 Arab.
<0.01 Poly. Arab
SOLID (43.69)
16.0 Glu.
2.7 Xyl.
1.9 Arab.
7.5 Lig.
ENZ HYD
LIQUID (30.88)
17.5 Glu.
<0.01 Poly. Glu.
2.4 Xyl.
0.15 Poly. Xyl.
0.78 Arab.
0.06 Poly. Arab.
SOLID (69.12)
22.6 Glu.
12.3 Xyl.
3.7 Arab.
9.9 Lig.
BASE TREAT
LIQUID (24.17)
<0.01 Glu.
0.07 Poly. Glu.
<0.01 Xyl.
0.09 Poly. Xyl.
<0.01 Arab.
0.04 Poly. Arab.
4.7 Lig.
SOLID (45.22)
35.7 Glu.
3.1 Xyl.
1.7 Arab.
3.0 Lig.
ENZ HYD
LIQUID (24.17)
15.6 Glu.
8.3 Poly. Glu.
0.53 Xyl.
0.02 Poly. Xyl.
0.15 Arab.
0.01 Poly. Arab.
SOLID (21.05)
11.8 Glu.
2.8 Xyl.
1.5 Arab.
2.8 Lig.
XBL795-6329

Figure 5

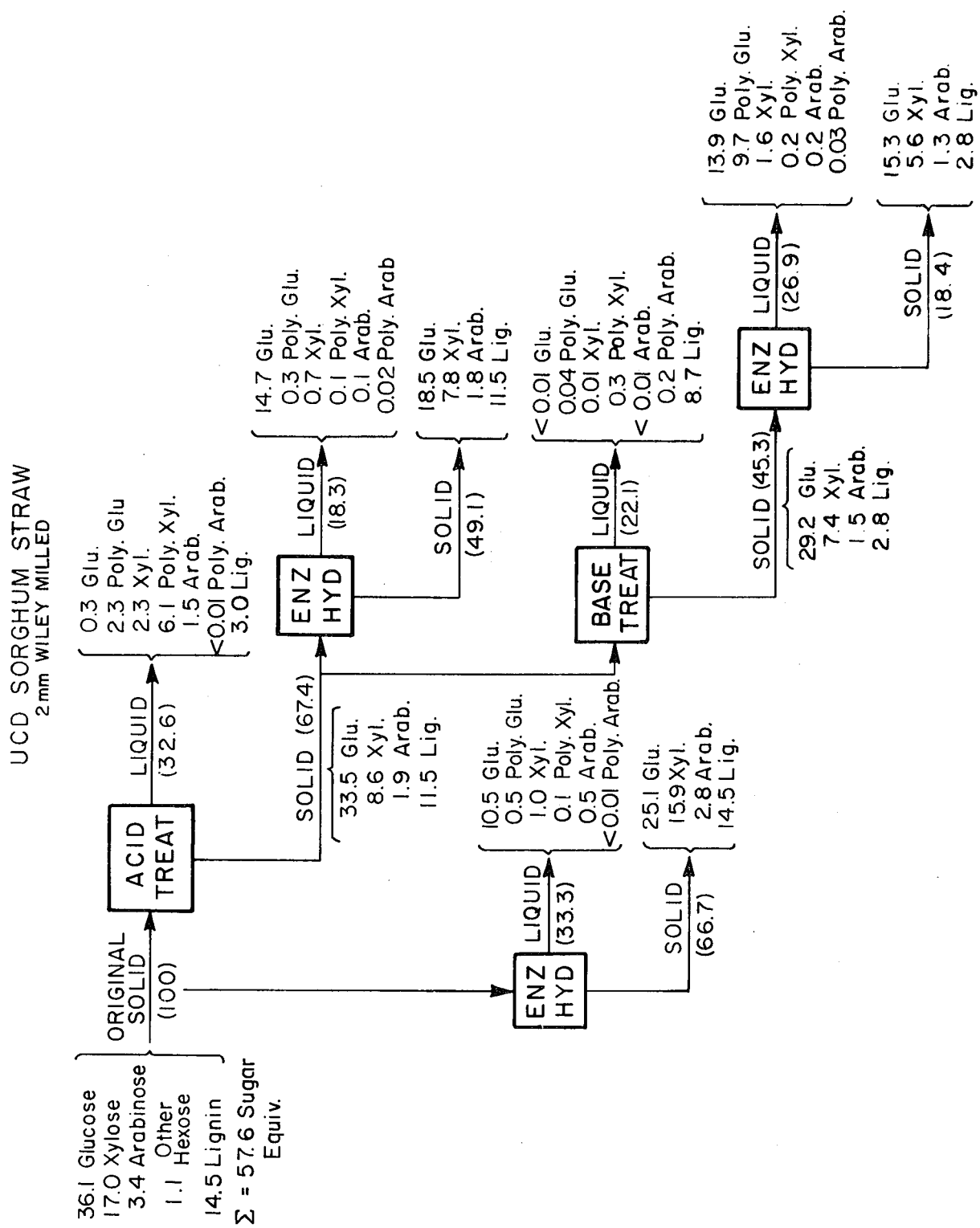
UCD SORGHUM STRAW
2 mm WILEY MILLED
36.1 Glucose
17.0 Xylose
3.4 Arabinose
1.1 Other Hexose
14.5 Lignin
Σ = 57.6 Sugar Equiv.
ORIGINAL SOLID (100)
ACID TREAT
LIQUID (32.6)
0.3 Glu.
2.3 Poly. Glu
2.3 Xyl.
6.1 Poly. Xyl.
1.5 Arab.
<0.01 Poly. Arab.
3.0 Lig.
SOLID (67.4)
33.5 Glu.
8.6 Xyl.
1.9 Arab.
11.5 Lig.
ENZ HYD
LIQUID (18.3)
14.7 Glu.
0.3 Poly. Glu.
0.7 Xyl.
0.1 Poly. Xyl.
0.1 Arab.
0.02 Poly. Arab
SOLID (49.1)
18.5 Glu.
7.8 Xyl.
1.8 Arab.
11.5 Lig.
ENZ HYD
LIQUID (33.3)
10.5 Glu.
0.5 Poly. Glu.
1.0 Xyl.
0.1 Poly. Xyl.
0.5 Arab.
<0.01 Poly. Arab.
SOLID (66.7)
25.1 Glu.
15.9 Xyl.
2.8 Arab.
14.5 Lig.
BASE TREAT
LIQUID (22.1)
<0.01 Glu.
0.04 Poly. Glu.
0.01 Xyl.
0.3 Poly. Xyl.
<0.01 Arab.
0.2 Poly. Arab.
8.7 Lig.
SOLID (45.3)
29.2 Glu.
7.4 Xyl.
1.5 Arab.
2.8 Lig.
ENZ HYD
LIQUID (26.9)
13.9 Glu.
9.7 Poly. Glu.
1.6 Xyl.
0.2 Poly. Xyl.
0.2 Arab.
0.03 Poly. Arab.
SOLID (18.4)
15.3 Glu.
5.6 Xyl.
1.3 Arab.
2.8 Lig.
XBL 795-6330

Figure 6

0 0 0 0 4 7 0 6 6 7 9

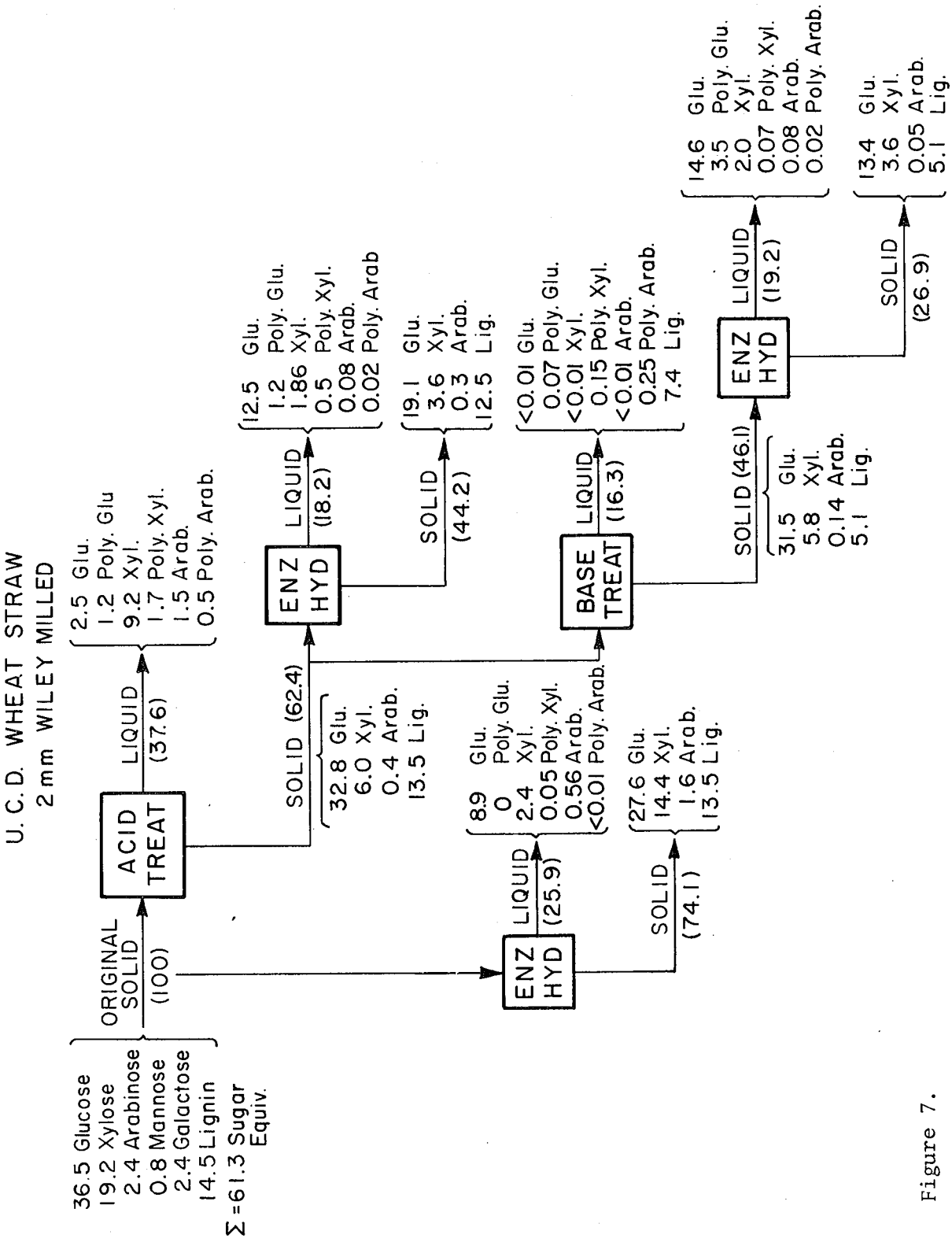

Figure 7.

Cellobiose is the simplest form of polymerized glucose and is not a trivial component of the liquor, especially as observed in the acid treatment liquors and the enzymatic hydrolyzates of the acid and base treated substrates. Of the materials studied, in the acid pretreatment phase, only sorghum and the cotton gin trash exhibited consumption of hydrogen ion 7.4 and 18.2%, respectively. In the case of cotton gin trash, it could be explained by the high dirt content. However, at this time, one can only speculate that sorghum contains relatively high content of amines that are neutralized since the typical odor of amines were detected during the sampling of boiling alkali reaction mixture.

The separation of acid liquors from the acid treated substrates were easily accomplished by vacuum filtration except in the case of cotton gin trash where considerable difficulty was encountered. Ultimately, centrifugation at 10K rpm was resorted to for the required degree of separation, i.e., a clear filtrate. Industrially, the separation of acid liquor from cotton gin trash would present a serious problem and considerable cost in acid make up. The dried acid treated substrates were amenable to easy handling. They poured readily and the static charge, that all of the original milled materials contained, was absent. In this study the acid treated substrates were freeze dried for expediency, however, selected samples of air dried and/or oven dried at 40°C were comparable in ease of handling except in the case of cotton gin trash. Freeze drying was the only solution to keep it powdered sufficiently for enzymatic hydrolysis. The alternative was to mill it again to break up the brittle cake.

As previously described, the samples removed during acid pretreatment were tracked, for sugar production, colorimetrically with dinitro salicylic acid reagent. The results of these determinations are shown in Figures 8 to 14, inclusive. In the determination, since the standard curve for sugar is based

0 0 0 0 4 7 0 6 6 3 0

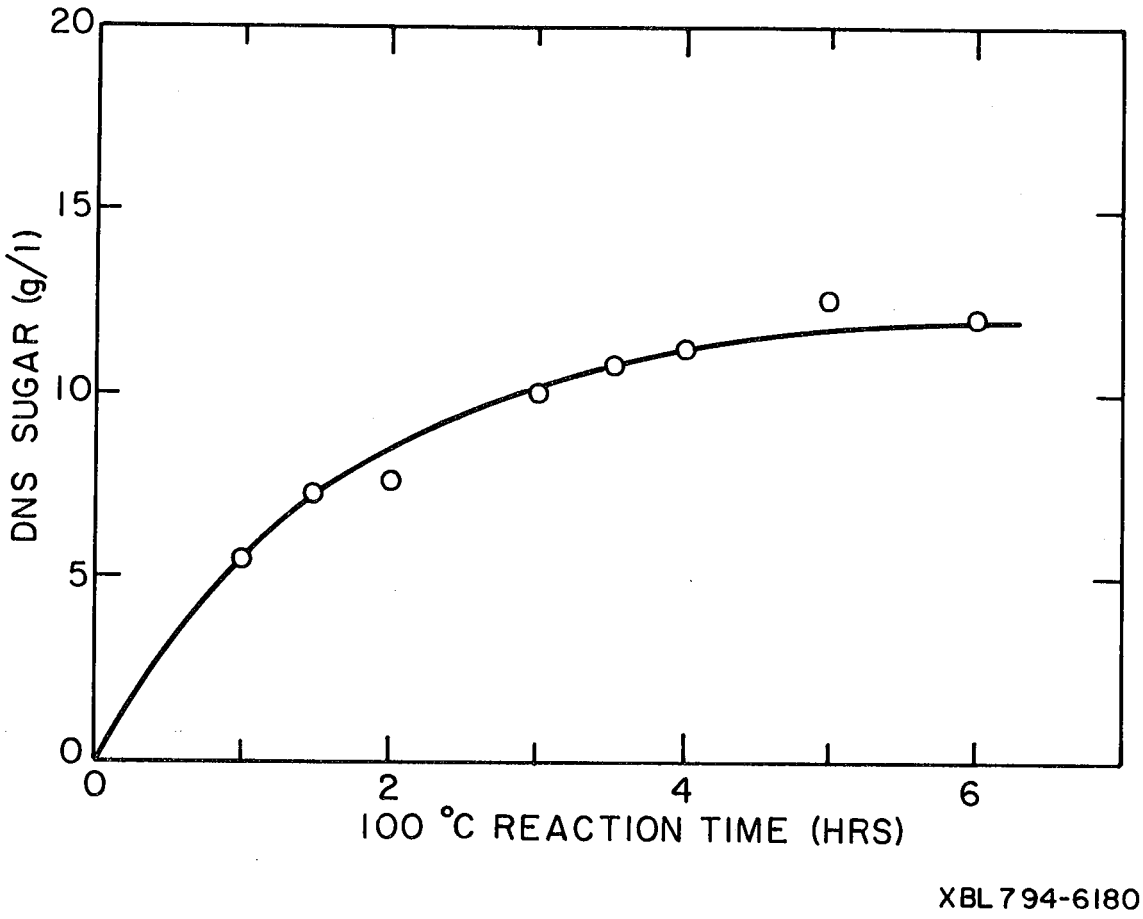

Figure 8. UCD Barley Straw, Acid Pretreatment with 0.92 w%(0.09M) Sulfuric Acid, 7.3 w% Suspension.

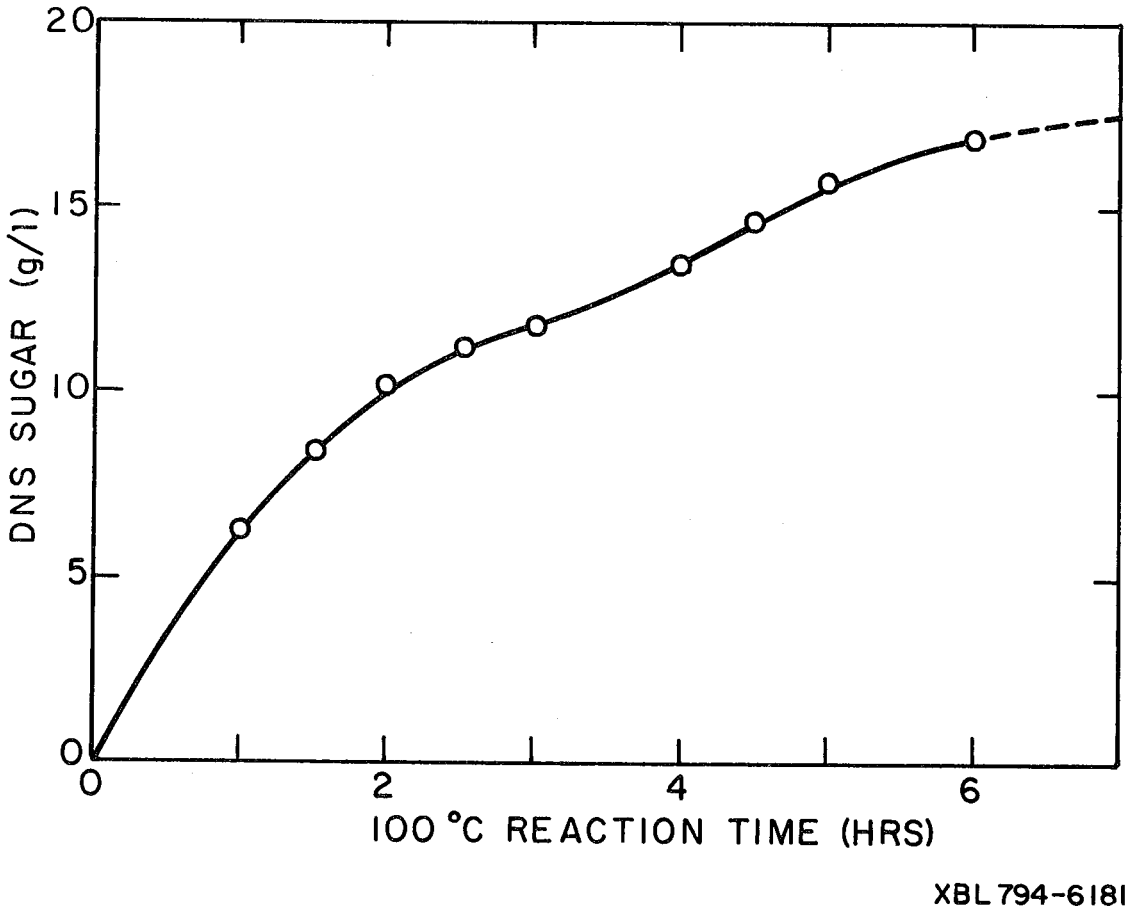

Figure 9. UCD Corn Stover, Acid Pretreatment with 0.92 w% (0.09M) Sulfuric Acid 7.02 w% Suspension.

0 0 0 0 4 7 0 5 6 8 1

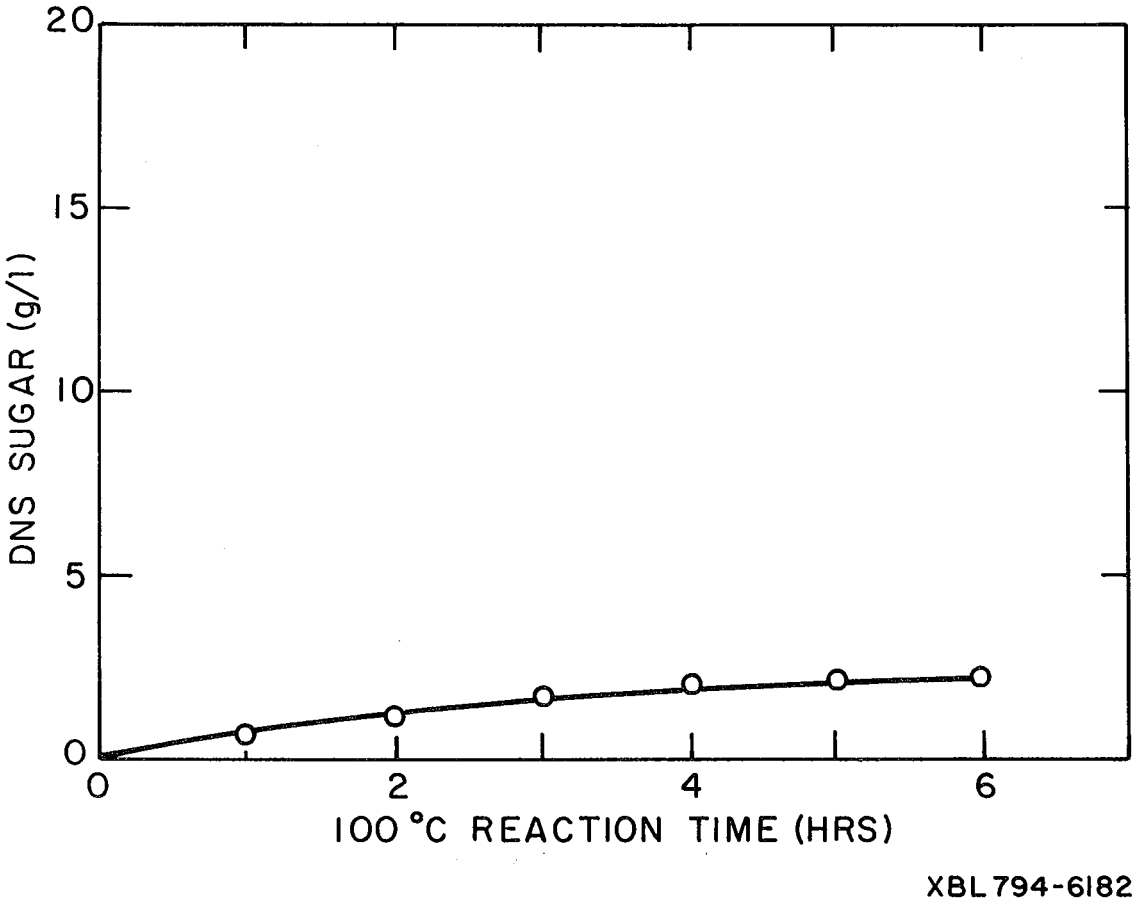

Figure 10. USDA Cotton Gin Trash, Acid Pretreatment with 0.92 w% (0.09M) Sulfuric Acid, 8.13 w% Suspension.

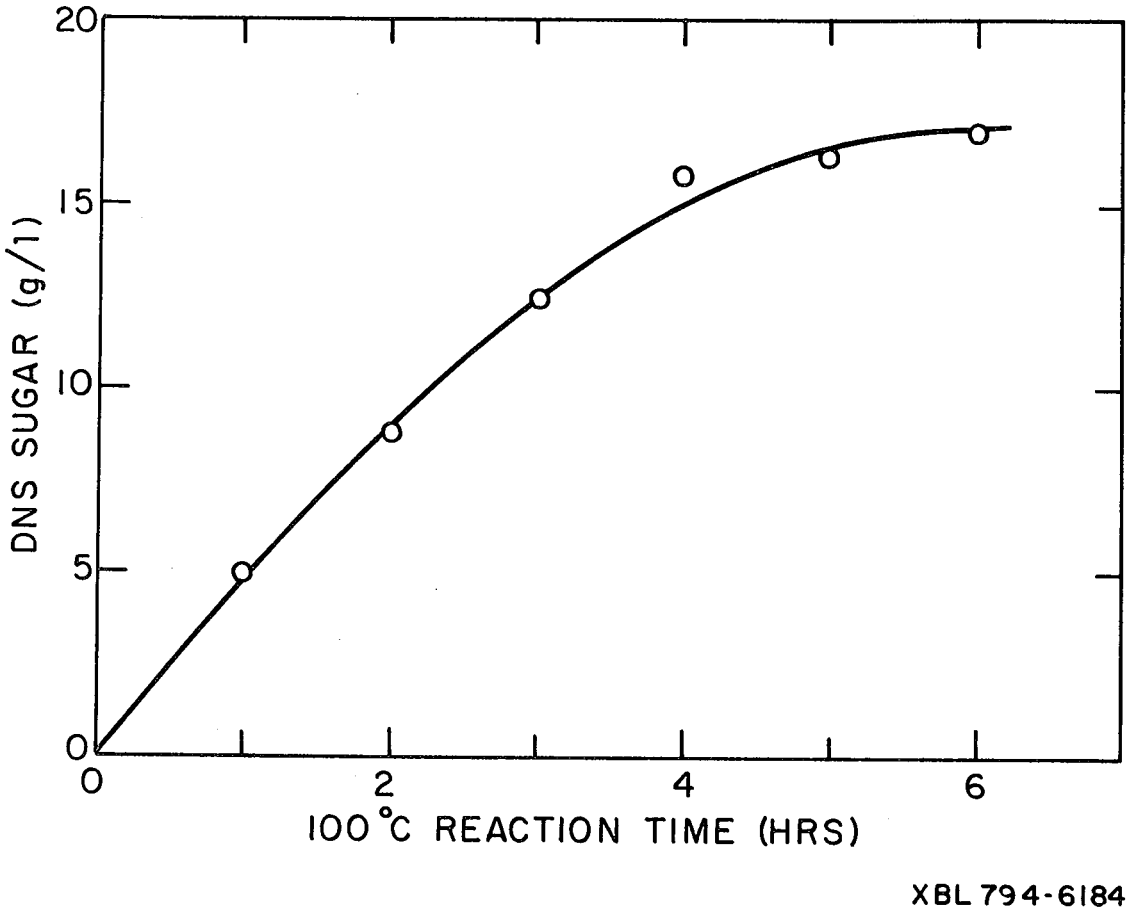

Figure 11. UCD Rice Hulls, Acid Pretreatment with 0.92 w% (0.09M) Sulfuric Acid, 8.19 w% Suspension.

0 0 0 0 4 7 0 5 6 8 2

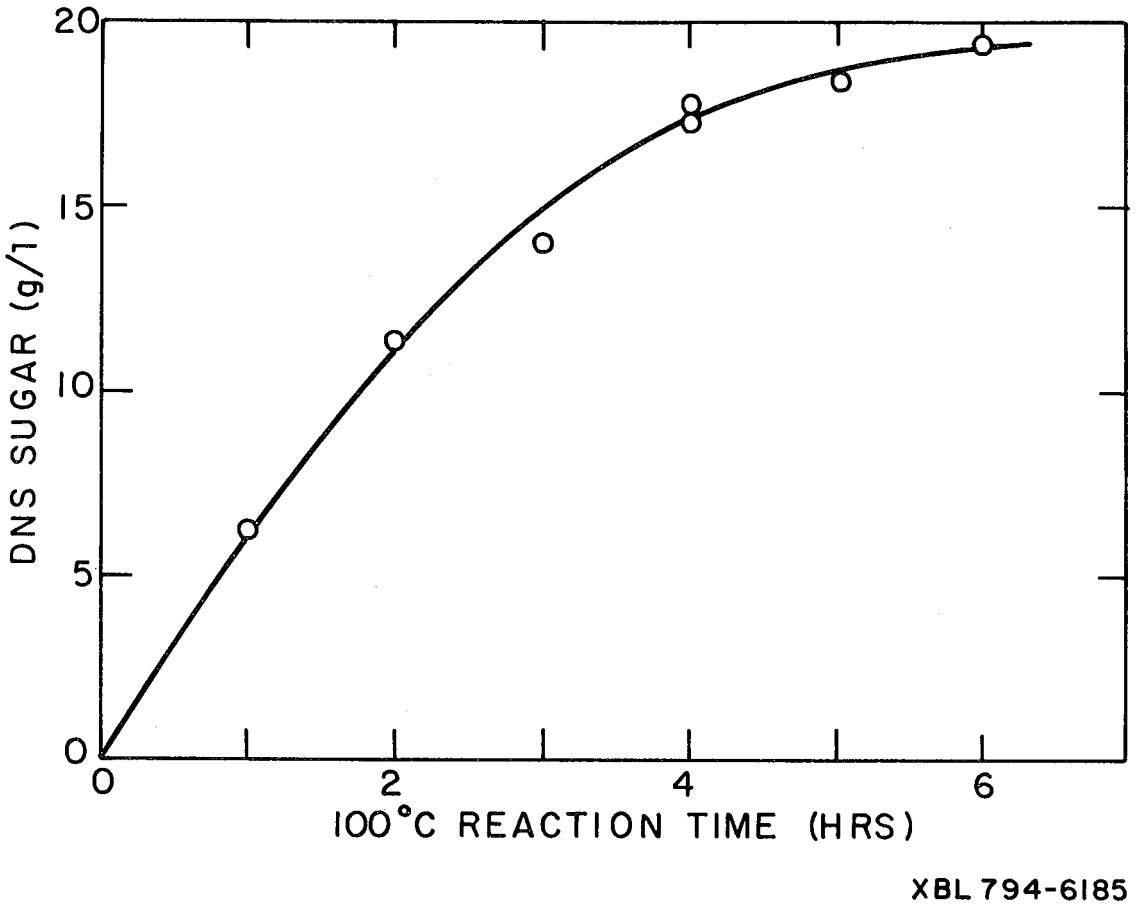

Figure 12. UCD Rice Straw, Acid Pretreatment with 0.92 w% (0.09M) Sulfuric Acid, 7.35 wt% Suspension.

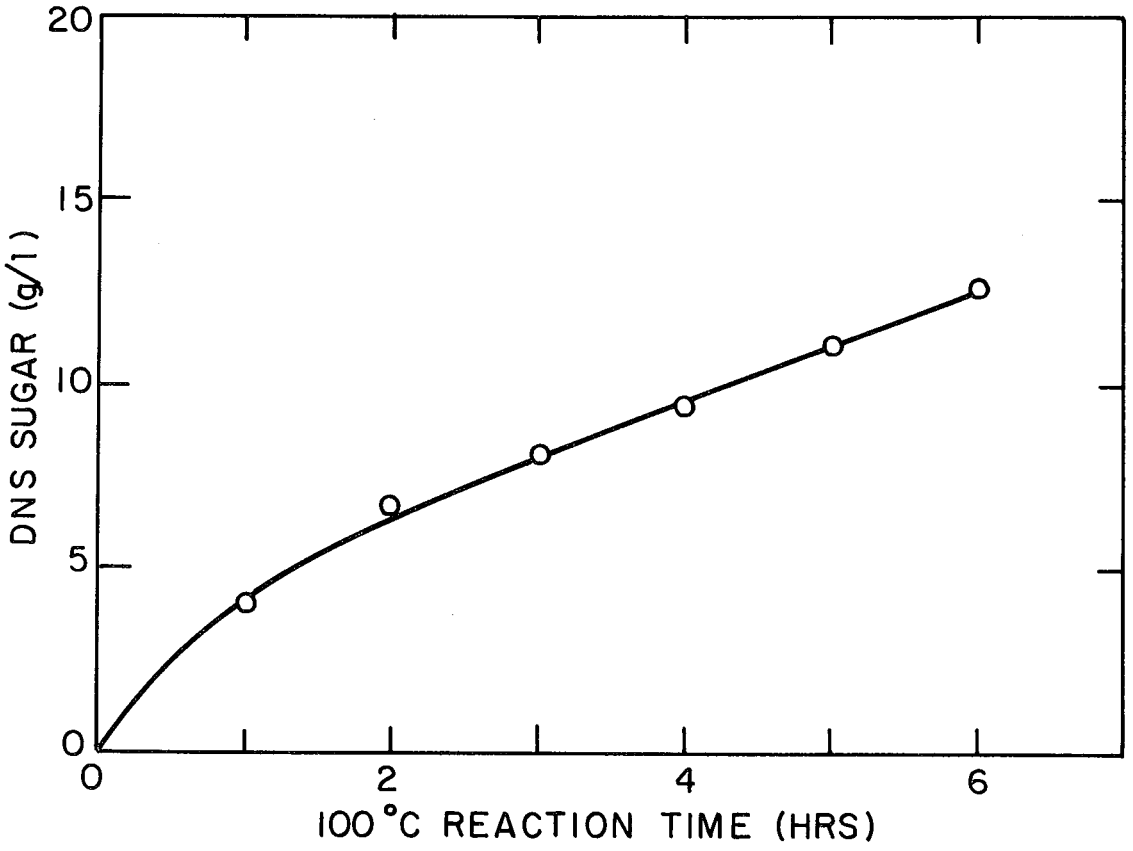

Figure 13. UCD Sorghum Straw, Acid Pretreatment with 0.92 w% (0.09 M) Sulfuric Acid, 8.11 w% Suspension.

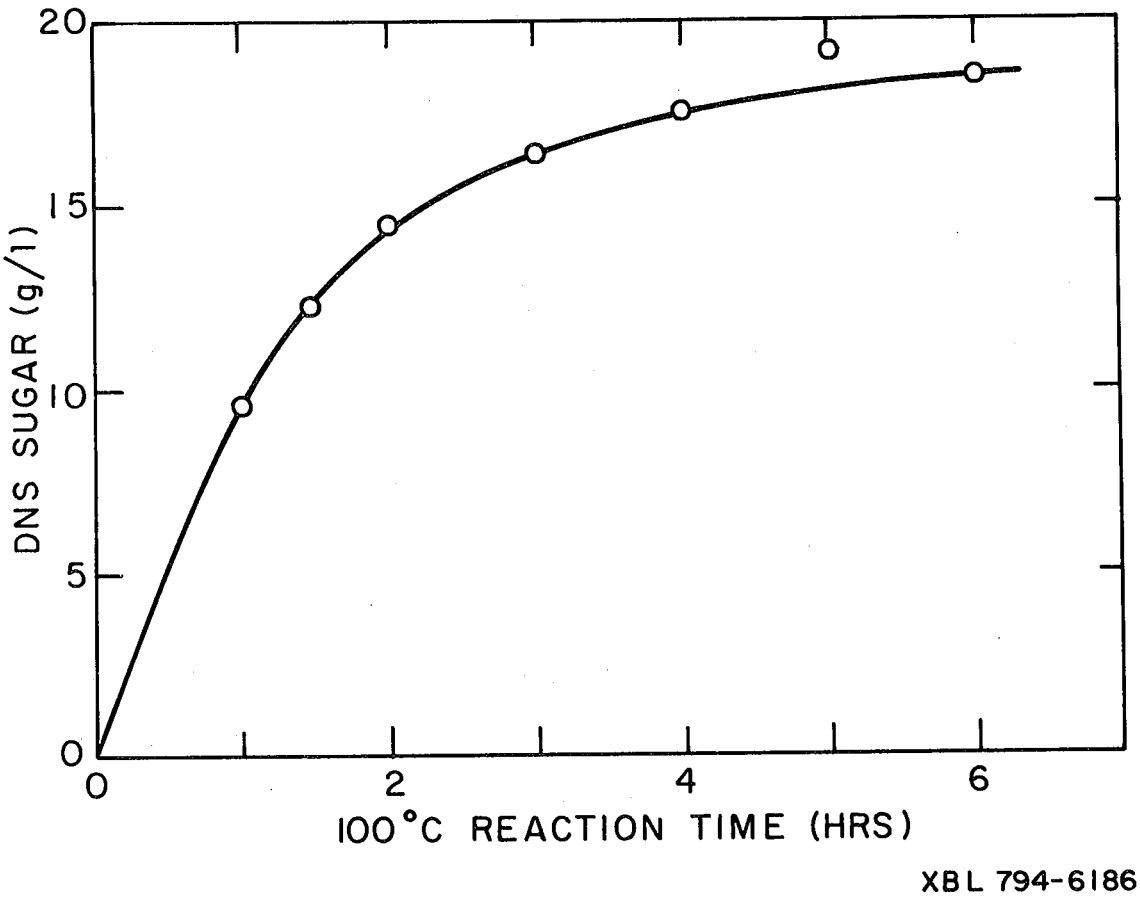

Figure 14. UCD Wheat Straw Acid Pretreatment with 0.92 w% (0.09M) Sulfuric Acid, 6.44 w% Suspension.

on glucose, the values graphed are relative and show only that with corn stover and sorghum there is an increase in sugar concentration in the liquor after 3 hours of boiling. GLC determination on the samples taken every hour verified this increase was due to an increase in glucose which was not desired.

The reason for the low pentose yield (6.3%) from cotton gin trash is unknown but could be due to the decreasing hydrogen ion concentration that occurred during the reaction ultimately resulting in the 18% consumption of the acid. Other than cotton gin trash, the pentosan to pentose conversion of the residues ranges from 38 to 83% and are shown in table 4. The acid pentosan extraction was governed by the imposition of a limit of the glucose concentration in the acid liquor. The extraction was stopped when the glucose concentration neared 3 grams per liter (0.3 w%). With continued boiling to increase the pentosan conversion (to a range of 55 to 90%), the rate of glucan conversion then exceeded the rate of pentose formation.

The enzymatic hydrolysis on the acid treated materials were as usually observed in this laboratory and are shown in table 5. Comparing the yields of glucose between enzymatic hydrolysis of the original milled material and the acid treated materials normalized to a weight of 100 starting amount in both cases, one can see the increase in yield sugar produced by the acid pretreated substrates. As shown in tables 2 and 5, barley straw glucose conversion increased from 19% to 35% or a factor of approximately 2. Likewise, corn stover 30% glucose to 46%, cotton gin trash 29% to 33%, rice hulls no change, rice straw 43% to 57%, sorghum 30% to 45%, wheat 24% to 42%. It is unknown why there was no apparent increase in sugar yield from rice hulls. Certainly, the glucan content is not relatively low as in the case of cotton gin trash. The inorganic content of rice hulls is somewhat higher than for rice straw and perhaps is a contributing cause. The original lignin content or when it appeared in the acid

0 0 0 0 4 7 0 5 6 8 4

Table 4

Acid Extraction Liquor of Original Material[(a)]
Basis: 100 lb. of Original Material

MATERIAL	GLUC.*	POLY GLUC.	XYL.	ARAB.	OTHER	PENTOSE CONV.(%)
Barley Straw	1.2	2.0	5.9	2.4		38.5
Corn Stover	2.9	1.0	12.2	2.4	3.3 Sol Lig	82.9
Cotton Trash	0.09	0.35	0.32	0.05	-	6.3
Rice Hulls	2.7	1.3	8.1	1.6	2.8 " "	56.7
Rice Straw	1.7	2.1	11.2	2.5	2.2 " "	70.1
Sorghum Straw	0.31	2.3	8.4	1.5	3.0 " "	50.5
Wheat Straw	2.5	1.2	10.9	2.0	--	67.6

(a) Extracted 5 1/2 hours (3 1/2 hours for corn stover) at 100°C with 0.92 w% (0.09M) sulfuric acid.

* Abbreviations for the sugars. Poly Glucose is mainly cellobiose. The small amounts of poly pentoses are included with xylose and arabinose.

Table 5

Yield of Sugars from Enzyme Hydrolysis (5 w% Suspension) of Acid Treated Solid
Basis: 100 lb. Original Material

MATERIAL	GLUCOSE	POLYMERIC GLUCOSE	XYLOSE*	ARABINOSE*	Conversion of Available Carbohydrate (%) G&PG	PENT	SUGAR
Barley	13.0	0.5	0.32	0.06	34.6	2.9	26.7
Corn Stover	15.7	1.1	0.81	0.11	46.2	27.0	44.5
Cotton Gin Trash	5.7	0.8	0.59	0.06	33.3	10.2	27.6
Rice Hulls	4.0	0.8	0.04	0.03	14.9	0.0	12.3
Rice Straw	18.6	2.6	0.95	0.10	57.0	18.8	52.0
Sorghum Straw	14.7	0.3	0.82	0.13	44.8	9.0,	36.3
Wheat Straw	12.5	1.2	2.36	0.10	41.8	38.4	41.2

* including small amounts of polymeric pentose

0 0 0 0 4 7 0 5 6 8 5

liquor, with a consequent decrease in substrate, does not seem to be related to the glucose yield. The combined sugar yields of the acid liquor and enzyme hydrolysis of acid treated material is shown in table 6. The increase in sugar conversions as compared to enzyme hydrolysis on the original material (table 2) is in the range of a factor of 2 to 3.

The alkali treatment performed on the acid pretreated materials appears to remove lignin from the substrate. Again in referring to data in Figures 1 to 7, inclusive or table 3, the lignin is decreased in the materials normalized to 100 starting amounts thusly: milled barley 13.8% lignin to acid-based treated barley 8.7% lignin, corn stover 15.1% to 4.2%, cotton gin trash 18% to 28% (an unexplainable increase), rice hulls 19.4% to 18.8%, rice straw 9.9% to 6.7%, sorghum 14.5% to 6.1%, wheat 12.5% to 11.1%. It should be noted that the hydroxide concentration and reaction time was not necessarily optimum in each case above. Monitored trials on barley and wheat indicated that between 3 and 4 hours of boiling with alkali no further loss in weight of substrate occurred. As is shown in table 7, the hydroxide consumption was appreciable in all cases. Unfortunately, this was not known to us or reported in the publications. Since the sodium hydroxide used per pound of glucose produced is excessive, the economics of this treatment appears not favorable even though the suppressed lignin content of the substrate could be utilized in the enzyme induction stage of the Berkeley process.

In comparing the glucose yields from enzymatic hydrolysis of acid-base treated materials versus acid pretreated alone there is an increase based on both at 100 weight starting amount normalization thusly: 34.6 glucose from acid treated barley straw substrate to 47.7 glucose from acid-based treated substrate, corn 46.2 to 66.4%, cotton gin trash 33.3 to 44.8%, rice hulls 14.9 to 27.2%, rice straw 57.0% to 66.9%, sorghum 44.8% to 80.8%, wheat straw 41.8 to 57.5%

Table 6

Total Yield Summary of Liquor and Enzyme Hydrolysis of Acid Treated Material
Basis: 100 lbs. Original Material

MATERIAL	GLUCOSE	POLY GLUCOSE	PENTOSES	G&PG CONVERSION (%)	PENTOSE CONVERSION (%)	TOTAL SUGAR CONVERSION (%)
Barley Straw	14.2	2.5	8.7	40.4	40.4	38.6
Corn Stover	17.6	2.1	15.5	50.8	86.3	60.6
Cotton Gin Trash	5.8	1.2	1.0	35.3	14.7	27.5
Rice Hulls	6.7	2.1	9.7	24.7	57.3	33.0
Rice Straw	20.3	4.7	14.8	61.6	76.6	63.7
Sorghum Straw	15.0	2.6	10.9	49.1	53.3	49.5
Wheat Straw	15.0	2.4	15.4	47.9	78.3	53.5

Table 7

Alkali Treatment on Previously Acid Extracted Materials.

MATERIAL	LBS. NAOH USED/LB. GLUCOSE PRODUCED	ALKALI USED (%)
Barley Straw	0.341	55.2
Corn Stover	0.388	63.4
Cotton Gin Trash	0.696	50.2
Rice Hulls	0.484	43.9
Rice Straw	0.253	40.0
Sorghum Straw	0.347	59.9
Wheat Straw	0.320	57.6

Thus, the increase yield must be balanced against the increased cost due to hydroxide usage, which was shown in table 7. The above increases are illustrated in table 8. The over-all increases of sugars in the acid liquor and sugars in the enzyme hydrolyzate of the acid and base treated substrates are shown in table 9. Comparison of the increase in conversions shown in table 2 and table 9 are in the range of a factor of 2 to 3.

In summary, it would appear the alkali treatment on these is uneconomical and is demonstrated in a typical production expectation shown in table 10. For example, barley straw (table 10) with the composition of the original material one can produce 1 Kg of glucose from 2.44 Kg of straw at 100% efficiency. Enzymatically hydrolyzing the acid base treated material one can produce 1 Kg of glucose from, on the average, 5.4 Kg of substrate at an additional cost of 0.341 Kg of sodium hydroxide.

The acid treatment appears to be warranted because of the near zero acid consumption. This presents the likelihood of acid liquor recycle on an additional two batches of material. Also, as is shown in Table 10, less of the acid treated material is required per unit weight of glucose produced as compared to the original material, leading to decreasing costs.

Table 8

Yield of Sugars from Enzyme Hydrolysis
(5 w% Suspension) of Acid and Base Treated Solid
Basis: 100 lb. of Original Material

MATERIAL	GLUCOSE	POLY GLUCOSE	XYL.*	ARAB*	CONVERSION OF AVAILABLE CARBOHYDRATE (&)		
					G & PG	PENTOSE	SUGAR
Barley	16.0	2.4	0.21	0.06	47.7	2.2	36.7
Corn Stover	13.8	8.1	0.93	0.07	66.4	35.7	64.0
Cotton Gin Trash	6.9	1.8	0.32	0.05	44.8	6.1	35.6
Rice Hulls	7.5	1.2	0.01	0.01	27.2	0.3	21.7
Rice Straw	15.6	8.3	0.55	0.16	66.9	15.8	60.8
Sorghum Straw	13.9	9.7	1.8	0.23	80.8	22.8	67.3
Wheat Straw	14.6	3.5	2.07	0.10	57.5	36.5	53.4

(a) Acid treated solid extracted for 3 hours at 100°C with 1w% (0.25M) sodium hydroxide.

(*) Including small amounts of polymeric pentose.

Table 9

Total Yield Summary of Acid Liquor, Base Treatment and Enzyme Hydrolysis

Basis: 100 lb. Original Material

	GLUCOSE	POLY GLUCOSE	PENTOSES	G&PG CONV.(%)	PENTOSE CONV. (%)	SUGAR CONV.(%)
Barley Straw	17.2	4.9	8.6	53.7	39.8	47.0
Corn Stover	15.7	9.2	16.4	63.8	86.0	71.1
Cotton Gin Trash	7.0	2.5	0.8	47.5	8.8	35.4
Rice Hulls	10.2	2.6	10.1	35.8	50.4	40.8
Rice Straw	17.4	10.5	14.6	67.8	75.6	68.0
Sorghum Straw	14.2	12.0	12.4	72.7	58.0	67.0
Wheat Straw	17.1	4.8	15.5	60.0	71.8	61.0

0 0 0 0 4 7 0 6 6 8 8

Table 10

Solids Treated Per Unit Wt. of Glucose Produced

	ORIGINAL MATERIAL (a)	ACID EXTRACT	ENZ. HYD OF ORIGINAL MATERIAL	ENZ. HYD. OF ACID TREATED MATERIAL	ENZ. HYD. OF ACID BASE TREATED MATERIAL
Barley Straw	2.44	31	12.8	7.4	5.4
Corn Stover	2.56	34	8.5	5.9	4.6
Cotton Gin Trash	5.00	143	17.2	15.4	11.5
Rice Hulls	2.77	20	17.5	20.8	11.5
Rice Straw	2.44	26	5.7	4.7	4.2
Sorghum Straw	2.77	38	9.1	6.7	4.2
Wheat Straw	2.74	27	11.2	7.3	5.5

(a) 100% Conversion Limit

References

1. K.A. Dolgov, S. Pisanenko, TR. UKR. Nauch.-Issled, Inst. Tsellyul. Bum. Prom. 7, #55 (1966) (Russian). Cf Chem. Abs. 66, 5376 (1967).

2. J.W. Dunning, E.C. Lathrop, Ind. Eng. Chem. 37, 24 (1945).

3. B.L. Browning, Editor, Chemistry of Wood P 66-68, Interscience, N.Y. (1963).

4. W.E. Moore, D.B. Johnson, Procedures for Chemical Analysis of Wood and Wood Products, Forest Products Lab., USDA Forest Service, Madison, Wisc. (1967).

5. L.G. Morin, J. Prox, Clin. Chem. 19, #9, 959 (1973).

6. J. Okuda, I. Miwa, Methods of Biochemical Analysis 21, pp 156-172, Wiley, New York (1973).

7. D.V. Phillips, A.E. Smith, Anal. Biochem 54, 95 (1973).

8. D.A. Heatherbill, J. Sci. Fed. Agric. 25, 1095 (1974).

9. W.C. Ellis, J. Chrom. 41, 325 (1969).

10. M. Evett, Carbohydrate Analysis by Gas Chromatography, Univ. of Calif., Lawrence Berkeley Lab., Private Communications (1976).

11. B. J. Leibrand, L. L. Dunham, Res. and Dev. 24,9, 32 (1973).

12. R.P. Freitas, B. Long, A.F. Sciamanna, C.R. Wilke, Procedure for Analysis of Solids and Liquors From Cellulosic Sources, UCLBL-5967 (Dec. 1977).

13. M. Mandels, L. Hontz, J. Nystrom, Biotech. Bioeng 16, 1471 (1974).

14. R.K. Andren, M. Mandels, J.E. Medeiros, Production of Sugars from Waste Cellulose By Enzymatic Hydrolysis, Part I, U.S. Army Natick Development Center, Natick, Mass. Presented at 8th Cellulose Conf., S.U.N.Y., Syracuse, N.Y. (May 19, 1975).

15. Ibid, Part II, Presented at 170th National ACS Meeting, Chicago, Ill. (Aug. 19, 1975).

16. N. Toyama, K. Ogawa, Proc. IV, IFS, Ferment. Tech. Today 743 (1972). The continuation of this work, "Sugar Production from Agricultural and Woody Wastes by Saccharification with Trichoderma Viride Cellulase" was presented at the National Science Foundation Seminar on Cellulose as a Chemical and Energy Resource held at the Univ. of Calif., Berkeley, June 25, 1974.

0 0 0 0 4 7 0 6 6 8 9

17. D. Galloway, Pulp and Paper, 59, #9, 104 (1975). Miller Freeman Publications, San Francisco.

18. A.F. Langlykke, J.M. Lanen, D.R. Fraser, Ind. Eng. Chem. 40,1716 (1948).

19. I.S. Goldstein, Science 189, 847 (Sept. 12, 1975).

U.S. GPO: 1979-689-169/F-85

This report was done with support from the United States Energy Research and Development Administration. Any conclusions or opinions expressed in this report represent solely those of the author(s) and not necessarily those of The Regents of the University of California, the Lawrence Berkeley Laboratory or the United States Energy Research and Development Administration.

0 0 0 0 4 5 0 2 9 4