0 0 0 0 4 7 0 8 7 0 9

Submitted to High Temperature Science

UC-4
LBL-6073 C.1
Preprint

KNUDSEN FLOW THROUGH MULTIPLE BARRIERS

David J. Meschi, Tushar K. Basu, and
Alan W. Searcy

July 1977

Prepared for the U. S. Energy Research and
Development Administration under Contract W-7405-ENG-48

For Reference

Not to be taken from this room

LAWRENCE BERKELEY LABORATORY
UNIVERSITY OF CALIFORNIA
BERKELEY

LBL-6073 C.1

DISCLAIMER

This document was prepared as an account of work sponsored by the United States Government. While this document is believed to contain correct information, neither the United States Government nor any agency thereof, nor the Regents of the University of California, nor any of their employees, makes any warranty, express or implied, or assumes any legal responsibility for the accuracy, completeness, or usefulness of any information, apparatus, product, or process disclosed, or represents that its use would not infringe privately owned rights. Reference herein to any specific commercial product, process, or service by its trade name, trademark, manufacturer, or otherwise, does not necessarily constitute or imply its endorsement, recommendation, or favoring by the United States Government or any agency thereof, or the Regents of the University of California. The views and opinions of authors expressed herein do not necessarily state or reflect those of the United States Government or any agency thereof or the Regents of the University of California.

0 0 0 0 4 7 0 6 7 1 0

KNUDSEN FLOW THROUGH MULTIPLE BARRIERS

David J. Meschi, Tushar K. Basu and Alan W. Searcy

Materials and Molecular Research Division, Lawrence Berkeley Laboratory
and Department of Materials Science and Mineral Engineering,
University of California, Berkeley, California 94720

ABSTRACT

The flux density of sodium chloride vapor which escapes through a circular orifice in a plate that fits flush against the exit face of a porous alumina barrier is shown to increase by a factor of 100 when the orifice diameter is increased from 0.04 cm to 1.0 cm. A model which treats the porous disk and the orifice as two barriers separated by a chamber that has no significant radial flux density gradient gives qualitative agreement with the experimental variation of flux density with orifice diameter and is of sufficient generality to yield the Whitman-Motzfeld equation for effusion cells as a special case. A model which assumes that a radial flux density gradient exists in a 20 μm high chamber between the porous barrier and the disk gives quantitative agreement with the experiments.

I. INTRODUCTION

It has usually been assumed that when a mixture of gases in the Knudsen flow regime passes through a porous barrier, the relative partial pressures P_i and P_j of any two molecules i and j in the exit gas will be related to their partial pressures P_i^o and P_j^o in the incident gas by

$$P_i/P_j = \left(P_i^o/P_j^o\right)\left(M_j/M_i\right)^{1/2} \qquad (1)$$

where M_i and M_j are the molecular weights of i and j. But Mohazzabi and Searcy recently showed[1,2], that under favorable circumstances gases can undergo much larger composition changes when passed through porous barriers than predicted by Equation (1). In particular, they showed that the ratio of monomers to dimers for sodium chloride vapor could be increased by more than a factor of 100 by passage through a porous alumina barrier and that the monomer/dimer ratio for both sodium chloride and lithium fluoride vapors were increased by similar amounts by passage through a bed of nickel powder.[3]

The changes in monomer/dimer ratios result from reactions on the surfaces of the porous barrier. It appeared of interest to extend the use of porous barriers coupled with line-of-sight mass spectrometry to investigate the heterogeneous catalysis of gas phase reactions such as, for example, $SO_3(g) \rightarrow SO_2(g) + 1/2\ O_2(g)$.

To improve thermal energy transport to the barrier and to reduce the background gas pressure in the spectrometer it would be desirable to fit against the exit face of a porous barrier disk a close-fitting metal lid pierced by a hole of diameter considerably smaller than that of the

porous disk. Because flow through the parts of the porous disk that are nominally masked by the lid might contribute significantly to the exit flux, we have investigated the variation of sodium chloride flux through an alumina barrier of fixed porosity, thickness, and diameter as a function of the area of orifice in a molybdenum effusion cell which has its lid fit flush against the alumina disk.

Our experiments indicate that the effective area of the alumina barrier was considerably larger than that exposed by the orifice. To explain the data we have developed two models of somewhat different complexity. The more detailed model predicts results which are in good agreement with the experimental data. The simpler model predicts fluxes that agree only qualitatively with experiments with a close fitting lid, but is more general. When assumptions of this model are warranted, it should be quite accurate. The generality of this model is illustrated by using it to derive the Whitman-Motzfeld[4,5] equation.

II. EXPERIMENTAL

The experimental set-up was only slightly modified from that of Mohazzabi and Searcy.[2] Figure 1 depicts schematically the Knudsen cell which served as a source of sodium chloride vapor. The interior diameter of the cell was approximately 1 cm. Orifice diameters of 0.960, 0.472, 0.292, 0.106, 0.061 and 0.043 cm. were used and duplicate runs were made with each orifice except that of 0.292 cm diameter. The porous barrier was an alumina disk, 0.2 mm thick, cut from a rod which had been hot pressed to a porosity of about 54 percent. Examination by means of a scanning electron microscope showed the alumina to consist of platelets about one micron thick, with pores ranging from 0.2 to 5 microns in diameter.

For all the runs the cell containing the NaCℓ sample was heated in an Atlas CH4 mass spectrometer to 1137(±3)°K. Although the ion currents of $NaC\ell^+$ and $Na_2C\ell^+$, corresponding to the monomer and dimer respectively, were monitored, the quantity of NaCℓ which escaped from the cell was determined from the weight loss measurements.

In Fig. 2 the results of the measurements are plotted as flux densities, given as moles of NaCℓ per second per cm^2, versus the orifice diameters in cm. Except for the 0.292 cm orifice, the open circles are the mean of two determinations with the range indicated by the vertical lines.

The 0.960 cm orifice exposed essentially the entire cross-section of the cell, so the flux density measured with this orifice was used to calculate the transmission coefficient of the disk, denoted by $f = J/J_o$, where J is the exit flux density of sodium chloride monomers plus twice

the flux density of dimers and J_o is the corresponding sum of incident flux densities. The weight loss data give 5.51×10^{-7} moles cm $^{-2}$ sec.$^{-1}$ for J at 1137°K, and J_o is calculated from the equilibrium vapor pressure[6] to be 3.09×10^{-4} moles cm $^{-2}$ sec.$^{-1}$ From these values f is found to be 1.78×10^{-3}.

For the 0.043 cm orifice the escape flux density, 5.65×10^{-5} moles cm $^{-2}$ sec $^{-1}$, is a hundred times greater than that for the 0.960 cm orifice, so the area of the alumina disk involved must have been at least that much greater than the area exposed by the orifice. Probably the entire disk contributed to some extent.

III. THEORETICAL

In the temperature range of interest, NaCℓ vapor at the saturation pressure contains approximately equal quantities of monomer and dimer, with the monomer fraction increasing as the pressure is decreased. For a mixture, the total vapor flux striking a unit area of wall or orifice would then be given by the expression,

$$J = \frac{1}{(2\pi RT)^{1/2}} \left(\frac{P_m}{M_m^{1/2}} + \frac{2P_d}{M_d^{1/2}} \right) = \frac{1}{(2\pi M_m RT)^{1/2}} \left(P_m + 2^{1/2} P_d \right),$$

where the subscripts m and d refer to monomer and dimer respectively, J is the flux density, P is the pressure, M the molecular weight and R the gas constant. This expression is valid whether the monomer and dimer are in equilibrium or not. If they are in equilibrium, as is known to be true for NaCℓ monomers and dimers with alumina barriers,[2] the expression can also be given as,

$$J = \frac{1}{\left(2\pi M_m RT\right)^{1/2}} P_m \left(1 + 2^{1/2} KP_m \right),$$

where K is the equilibrium constant for the reaction,

$$2\ NaC\ell\ (g) = Na_2C\ell_2\ (g).$$

For convenience we will define a quantity Q,

$$Q = P_m + 2^{1/2}P_d, \tag{2}$$

which can be regarded as a kind of effective pressure, Than,

$$J = \frac{Q}{2\pi MRT^{1/2}}.$$

Here and in following expressions the subscripts have been dropped and all quantities will be understood to refer to the monomer unless otherwise indicated.

MODEL I

An impedance to gas flow can be represented formally as a device with an entrance opening of area a_A and an exit opening of area a_B. This device has the property that, of the molecules which come in the entrance, a fraction f_1 will eventually emerge at the exit and the rest will eventually re-emerge at the entrance. Similarly, of the molecules which enter the device at the exit opening, a fraction f_2 will emerge at the entrance and the rest will re-emerge at the exit.

Figure 3a shows such an impedance schematically, where z_1 and z_2 are the fluxes in moles/sec entering openings A and B, and z_3 and z_4 are the fluxes leaving these openings. At steady state, the net flux Z from left to right is given by

$$Z = f_1z_1 - f_2z_2. \tag{3}$$

If the pressure and therefore the flux density is the same on both sides of the impedance, Z must be zero. That is, if $z_1/a_A = z_2/a_B$, then

$$Z = f_1z_1 - f_2z_2 = f_1z_2a_A/a_B - f_2z_2 = (f_1a_A/a_B - f_2)/z_2 = 0,$$

which means, $f_1 a_A = f_2 a_B = \sigma$, where σ is a conductance with the dimensions of area. Equation (3) can then be rewritten in terms of σ, $J_1 = z_1/a_A$ and $J_2 = z_2/a_B$:

$$Z = f_1 z_1 - f_2 z_2 = \sigma (J_1 - J_2).$$

This result can easily be extended to two impedances in series as shown in Fig. 3b. By analogy with the previous case, Z, the net flux from left to right passing through both impedances, can be related to the various flux densities J_1, J_2, J_4 and J_5:

$$Z = \sigma_I (J_1 - J_2) = a_B (J_4 - J_2) = \sigma_{II} (J_4 - J_5).$$

These equations can be solved for Z in terms of J_1 and J_5, the flux densities at entrance and exit, respectively:

$$Z = \frac{J_1 - J_5}{\frac{1}{\sigma_I} + \frac{1}{\sigma_{II}} - \frac{1}{a_B}}$$

A further generalization to n impedances in series gives,

$$Z = \frac{J_o - J_t}{\sum_{i=1}^{n} 1/\sigma_i - \sum_{j=2}^{n} 1/a_j}, \qquad (4)$$

where J_o is the flux density entering at the entrance, J_t is the flux density entering the sequence of impedances at the exit, and a_j is the cross-sectional area of the junction between impedances j-1 and j.

Were it not for the sum $\Sigma\, 1/a_j$ in the denominator, this expression would be exactly analogous to that for the flow of electrical current through a series of resistors. This additional term arises from what Dushman calls end effects.[7] Each of the σ_i contains implicitly a correction for an end effect, but when these impedances are connected

in series all but the first of these corrections become unnecessary and must be subtracted out.

The generality of Eq. (4) can be illustrated by deriving the Whitman-Motzfeld equation[4,5] from it as a special case. A typical Knudsen cell with sample can be regarded as three impedances in series. Using the notation of Paule and Margrave[8] these are, the sample surface of area A and transmission coefficient α_v, the cell body proper also of cross-sectional area A and with a transmission coefficient equal to the Clausing factor W_A, and the orifice of area B and Clausing factor W_B. The incident flux density J_o is that corresponding to the equilibrium pressure P_{eq}:

$$J_o = \frac{P_{eq}}{(2\pi MRT)^{1/2}} .$$

The net flux Z is related to the measured pressure P_m by a similar expression:

$$Z = \frac{P_m}{(2\pi MRT)^{1/2}} W_B B.$$

Since the material is vaporizing into a vacuum J_t is zero. Substituting these values in Eq. (4) gives the relation,

$$\frac{P_m}{(2\pi MRT)^{1/2}} W_B B = \frac{P_{eq}}{(2\pi MRT)^{1/2}} \left(\frac{1}{W_A A} + \frac{1}{W_B B} + \frac{1}{\alpha_v A} - \frac{2}{A}\right)^{-1} ,$$

which can be rearranged to give,

$$P_m = \frac{P_{eq}}{1 + \frac{W_B B}{A}\left(\frac{1}{\alpha_v} + \frac{1}{W_A} - 2\right)} .$$

The Whitman-Motzfeld equation as derived by Paule and Margrave[8] reduces to this same equation because it has been shown that the transmission coefficient for condensation on the sample surface, α_c, must be identical to that for vaporization at any specified temperature and pressure.[9]

In order to apply this model to the present experiments, the system under study is considered to consist of two regions divided by the porous alumina disk as shown schematically in Fig. 4. The sample space of the cell comprises one region, and the second region consists of the narrow space between the top of the porous disk and the lid. The disk representa an impedance with conductance f_dA, where f_d is its transmission coefficient and A the cross-sectional area of the cell and disk. In series with this impedance is the impedance of the orifice with a conductance equal to the product of its area a and Clausing correction W_a. Since the cell is in a vacuum the flux density J_t of Eq. (4) is zero, and J_o is defined by means of the relation

$$J_o = \frac{Q_e}{(2\pi MRT)^{1/2}}$$

where Q_e is the value of Q in equilibrium with the condensed NaCl. Equation (4) may be written in terms of these quantities to give the following:

$$Z = \frac{J_o}{\frac{1}{f_dA} + \frac{1}{aW_a} - \frac{1}{A}} = FZ_o$$

In this equation Z_o is equal to AJ_o, and F denotes the overall transmission coefficient of the porous disk plus the orifice: If we define f_o, the transmission coefficient of the orifice, as being equal to $W_a a/A$, then

$$F = \frac{f_d f_o}{f_d + f_o - f_d f_o}$$

In these expressions it is not necessary to distinguish between monomer and dimer because, as Mohazzabi and Searcy have shown,[2] the amount of material transported by molecular flow is independent of the particular species involved.

For the conditions of the experiments this model predicts the flux densities shown in Fig. 2 as a dashed line. Over most of the range the predicted values lie considerably above those obtained experimentally, but the behavior is qualitatively correct and seems to indicate that the rise in flux densities for small orifices is due to the presence of a gap or space between the lid containing the orifice and the porous alumina disk. The major point of difference between the model and the actual experiment is that the former assumes no flux gradient in the radial direction, whereas in actuality the space between the lid and porous disk is so small that some sort of flux gradient must exist. The consideration of this gradient led to the second model.

MODEL II

When a flux gradient is assumed to exist in the radial direction, the analysis of the fluxes in the upper region must be done differently.

The portion of the alumina disk exposed by the orifice has the flux fJ_0 coming through from the lower region, where f is again the transmission coefficient of the disk. The portion of the upper region between the lid and the alumina disk has, in addition to this incoming flux, a downward flux through the disk and a radial flux. Both of these are functions of the radius, and so it is convenient to consider the fluxes for an annular portion of the region bounded by the radii r and r + dr and by the lid above and the disk below. Then the flux entering from below is equal to

$2\pi r dr f J_0$, and the flux escaping through the disk is equal to $2\pi r dr f J(r)$, where

$$J(r) = \frac{Q(r)}{(2\pi MRT)^{1/2}} .$$

The quantity Q was defined in Eq. (2) and is here a function of the radius as indicated. Only the radial flux remains to be considered.

According to Clausing[7], molecular flow of a gas through a channel between two plates is described by the relation,

$$Z = KJ_o ab$$

Z is the transmitted flux, J the incident flux density, a and b are the width and height, respectively, of the channel and K is the Clausing factor for the channel. For channels with $\underline{a} >> \ell >> b$ (ℓ being the length), the value of K approaches $b/\ell \ln(\ell/b)$. The expression then becomes,

$$Z = \frac{b}{\ell} \ \ell n \ (\ell/b) \ \frac{P}{(2\pi MRT)^{1/2}} \ ab = \frac{\gamma}{L} ab \frac{P}{\ell}$$

where $\gamma = b \ \ell n(\ell/b)$, $L = (2\pi MRT)^{1/2}$, and J_o is expressed in terms of the pressure and other parameters. If P/ℓ is approximated by the gradient of the pressure, this equation becomes essentially an expression of Fick's law with the diffusion coefficient equal to γ/L.

In the present case Q replaces P and $\underline{a}$ becomes $2\pi r$ or $2\pi(r + dr)$. The net radial diffusion flux entering the annular region of interest is then,

$$\frac{2\pi\gamma b}{L} \left[(r + dr) \frac{\partial Q}{\partial r} (r + dr) - r \frac{\partial Q(r)}{\partial r} \right] =$$

$$\frac{2\pi\gamma b}{L} \left(\frac{\partial Q(r)}{\partial r} + r \frac{\partial^2 Q(r)}{\partial r^2} \right) dr.$$

The equation for the loss (or gain) of matter in the annular region is then,

$$\frac{dn}{dt} = \frac{2\pi\gamma b}{L}\left(\frac{\partial Q}{\partial r} + r\frac{\partial^2 Q}{\partial r^2}\right) dr - 2\pi r dr f\frac{Q}{L} + 2\pi r dr f\frac{Q_e}{L} .$$

At steady state, $\frac{dn}{dt} = 0$, and so,

$$\gamma b\left(\frac{\partial Q}{\partial r} + r\frac{\partial^2 Q}{\partial r^2}\right) - rfQ + rfQ_e = 0 \qquad (5)$$

By making the substitutions, $R = 1 - Q/Q_e$, $s = r(\frac{f}{b\gamma})^{1/2}$, equation 5 is transformed to Bessel's equation of zero order:

$$s^2\frac{d^2R}{ds^2} + s\frac{dR}{ds} - s^2R = 0$$

The general solution to this equation has the form,

$$R(s) = AI_0(s) + BK_0(s),$$

where $I_0(s)$ and $K_0(s)$ are modified Bessel functions of order zero, and A and B must be determined by the boundary conditions. These are that the gradient of Q is zero at the outer edge of the lid and that Q is equal to fQ_e at the edge of the orifice. Stated mathematically, the conditions are,

$$\left(\frac{\partial Q}{\partial r}\right)_{r=R_2} = 0;\ Q\left(R_1\right) = fQ_e.$$

In these expressions R_2 is the diameter of the lid and is constant for all orifices, and R_1 is the radius of the orifice. In terms of the transformed variables these equations become,

$$\frac{dR\left(S_2\right)}{dS} = 0;\ R\left(S_1\right) = 1-f,$$

where S_1 and S_2 correspond to R_1 and R_2, i.e. $S_1 = R_1\ (f/b\gamma)^{1/2}$, etc.

From these conditions A and B are found to have the following forms:

$$A = -(1-f)\frac{K_1(S_2)}{\Delta};\ B = -(1-f)\frac{I_1(S_2)}{\Delta}.$$

These relations involve the modified Bessel functions of order one, $I_1(S_2)$ and $K_1(S_2)$. The quantity Δ is the determinant, $-[I_0(S_1)K_1(S_2) + I_1(S_2)K_0(S_1)]$.

It is now possible to evaluate R(s) and consequently Q(r). However, the quantity of interest is the gradient of Q at R_1, since this gradient determines the diffusion flux escaping from under the lid to augment the flux passing directly through the portion of the disk exposed by the orifice:

$$\frac{\partial Q(R_1)}{\partial r} = -Q_e\left(\frac{f}{b\gamma}\right)^{1/2}\frac{dR(S_1)}{ds}.$$

The diffusion flux is then equal to

$$\frac{2\pi R_1}{L}\ Q_e\ (fb\gamma)^{1/2}\frac{dR(S_1)}{ds}$$

As indicated above, this flux is added to the flux which comes directly through the disk to give the total flux Z:

$$Z = \frac{2\pi R_1}{L}Q_e\ (fb\gamma)^{1/2}\frac{dR(S_1)}{ds} + \pi R_1{}^2\frac{fQ_e}{L}.$$

Dividing this quantity by the area of the orifice gives the apparent flux density:

$$J = \frac{Z}{\pi R_1{}^2} = \frac{fQ_e}{L} + \frac{2}{LR_1}Q_e\ (fb\gamma)^{1/2}\frac{dR(S_1)}{ds} = \frac{Q_e}{L}\left[f + 2\frac{(fb\gamma)^{1/2}}{R_1}\frac{dr(S_1)}{ds}\right] \quad (6)$$

With the exception of the spacing b between the porous barrier and the lid, all the parameters in this equation have already been assigned values. For b a value of 2×10^{-3} cm. was chosen because it was

reasonable and gave a good fit to the experimental data. In Fig. 2 the flux density calculated from Eq. (6) is plotted against the orifice diameter as the solid line. In view of the good agreement with the experimental values it seems likely that the measured variation of flux density with orifice size is due to the augmentation of the direct flux by the flux which comes through the part of the porous disk covered by the lid and then diffuses between the lid and disk to the orifice area.

Mohazzabi and Searcy[2] noted that their values of transmission constants, defined as $\underline{a} = hJ/J_o$, where h is barrier thickness, increased somewhat with barrier thickness. They suggested that a leakage error is responsible for the increase. We can apply Eq. (6) to test whether contributions to the measured flux of nominally masked portions of the porous barriers used by Mohazzabi and Searcy may have been responsible for the increase of $\underline{a}$ with h. They used an orifice of 0.38 cm. diameter in an effusion cell of 1.64 cm. diameter. If a 20μm gap between their alumina barrier and lid is assumed, the transmission constants corrected by Eq. (6) are 0.67 times the uncorrected value for their 0.389mm thick barrier and 0.59 times for their 0.838mm thick barrier, or 4.6×10^{-3}mm and 5.5×10^{-3}mm calculated for the NaCℓ measurements and 6.0×10^{-3}mm for both orifices when zinc is the vapor transported. Leakage through the nominally masked portion of their barrier does appear to be the source of the observed variation of $\underline{a}$ with h because these corrected values are nearly independent of h.

ACKNOWLEDGEMENT

This research was supported by the U.S. Energy Research and Development Administration.

REFERENCES

1. P. Mohazzabi and A. W. Searcy, J. Chem. Phys., 61, 4358 (1974).
2. P. Mohazzabi and A. W. Searcy, J. Chem. Phys., 65, 5037 (1976).
3. P. Mohazzabi and A. W. Searcy, J. Mass. Spec. & Ion Physics, in press.
4. C. I. Whitman, J. Chem. Phys., 20, 161 (1952).
5. K. Motzfeld, J. Phys. Chem., 59, 139 (1955).
6. JANAF Thermochemical Tables, 2nd. ed., NSRDS-NBS 37, (U.S. Nat. Bur. of Stand., Washington, DC 1971).
7. S. Dushman, p. 102, Scientific Foundations of Vacuum Technique, (John Wiley and Sons, New York, 1949).
8. R. C. Paule and J. L. Margrave, "Free Evaporation and Effusion Techniques," p. 138, The Characterization of High Temperature Vapors, ed. J. L. Margrave, (John Wiley and Sons, New York, 1967).
9. A. W. Searcy, A. Buchler, and D. Beruto, High Temp. Sci., 6, 64 (1974).

FIGURES

1. Cross sectional drawing of the effusion cell and porous disk.
2. Variation of flux density of sodium chloride vapor with diameter of an orifice fitted against a porous alumina disk of 10 mm diameter. Points are experimental. The curves are calculated from two theoretical models.
3. Schematic diagrams flow through impedences (see text).
4. Schematic drawing of a cell and barrier assembly which is interpreted in terms of model I, which is appropriate if radial flux density gradients are negligible.

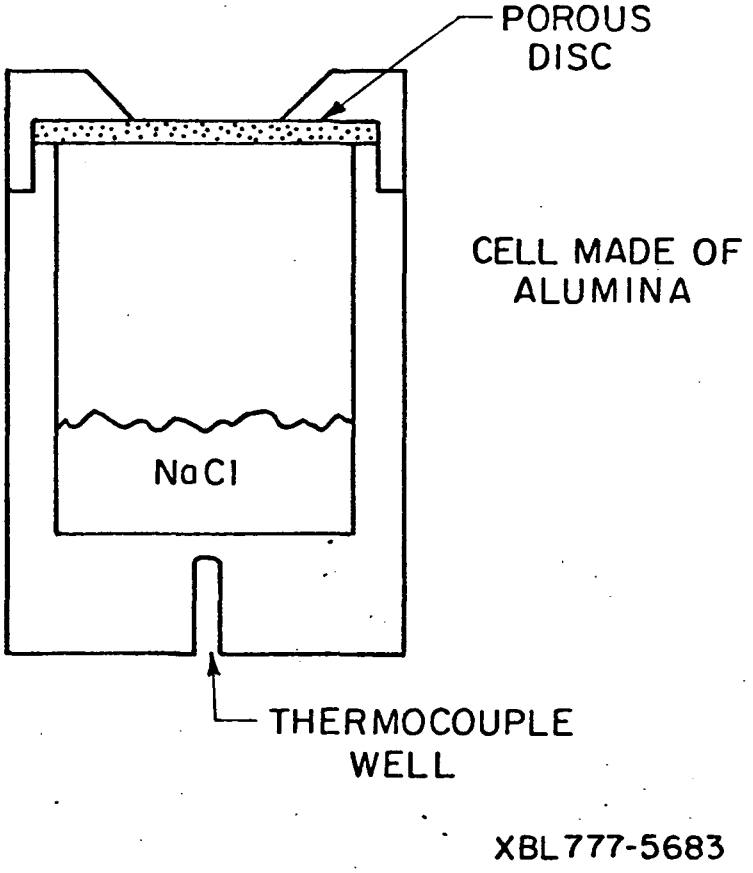
POROUS
DISC
CELL MADE OF
ALUMINA
NaCl
THERMOCOUPLE
WELL
XBL777-5683

Fig. 1.

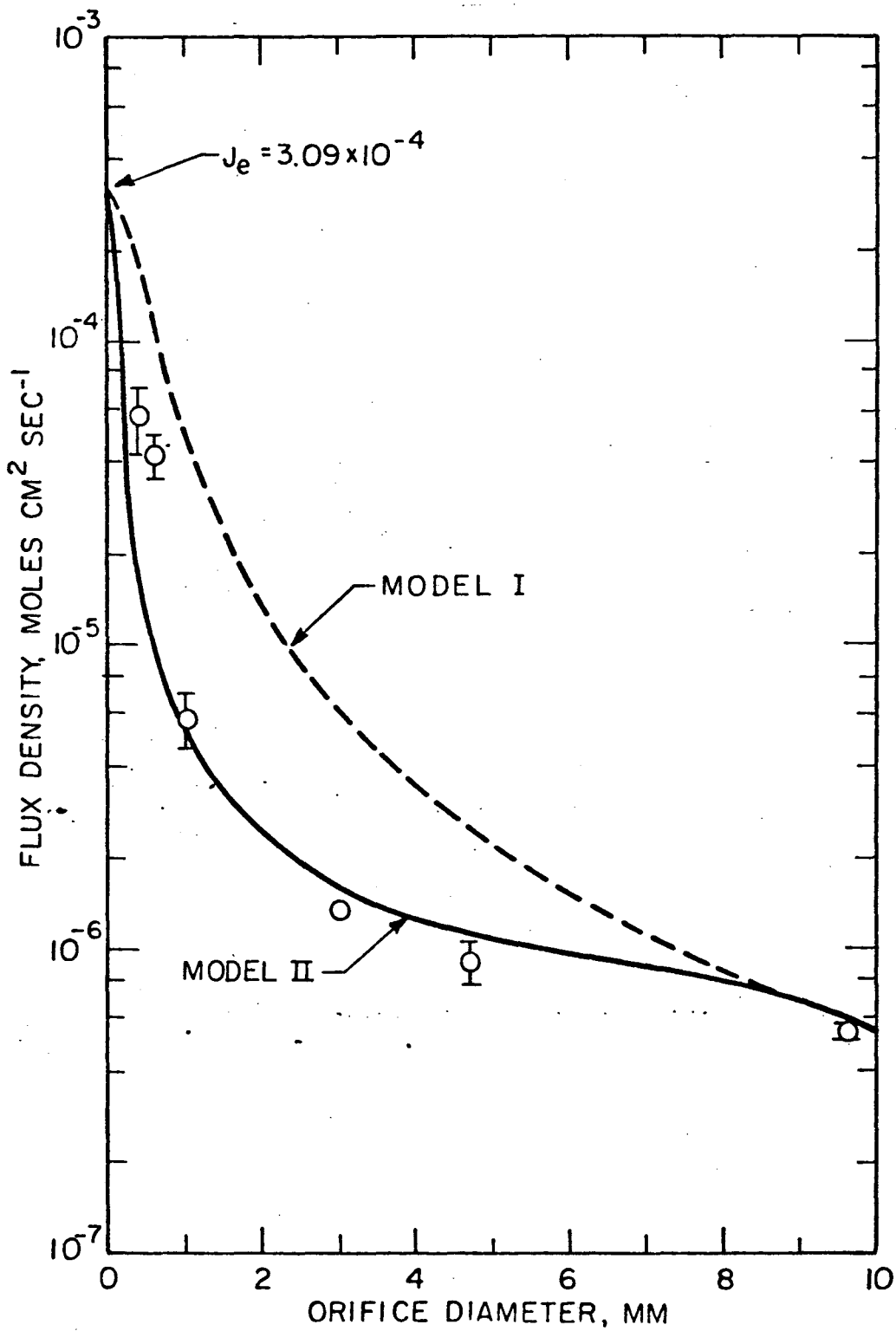

XBL777-5684

Fig. 2.

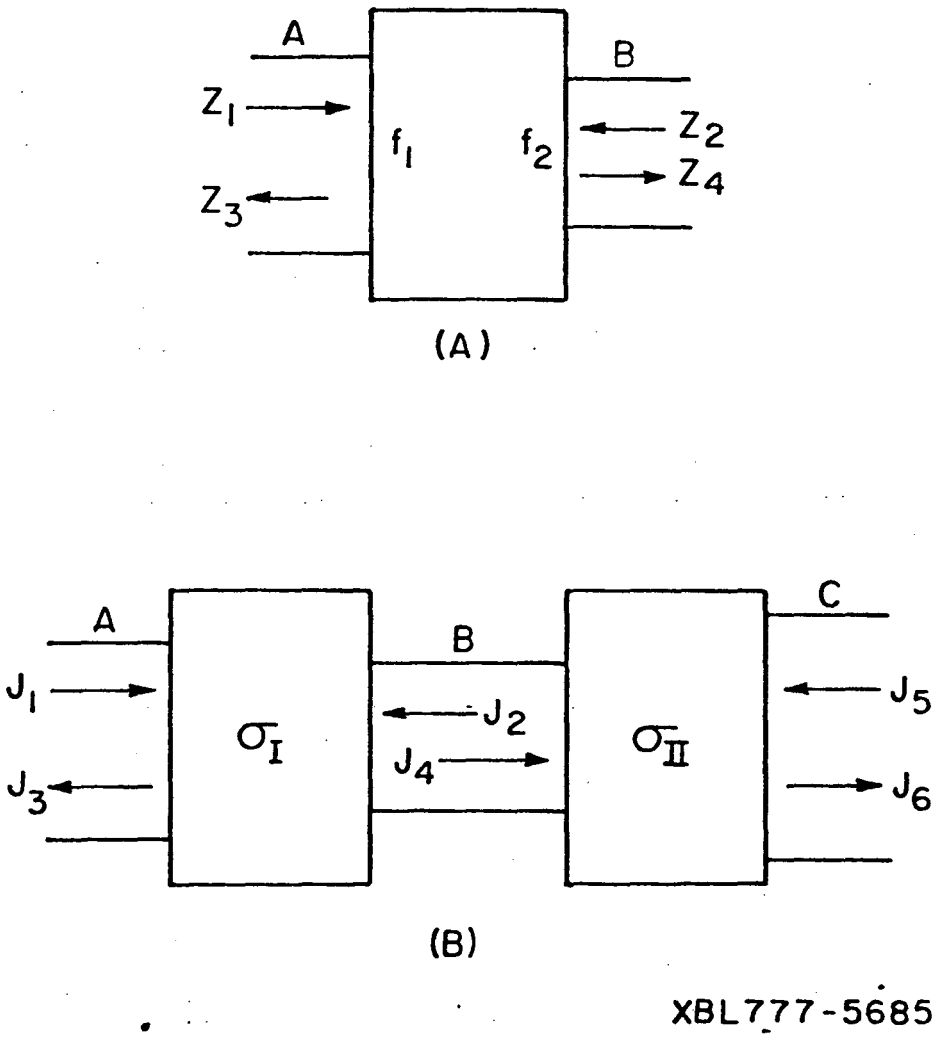
A
B
Z_1
Z_2
f_1
f_2
Z_4
Z_3
(A)
A
B
C
J_1
J_5
J_2
σ_I
σ_{II}
J_4
J_3
J_6
(B)
XBL777-5685

Fig. 3.

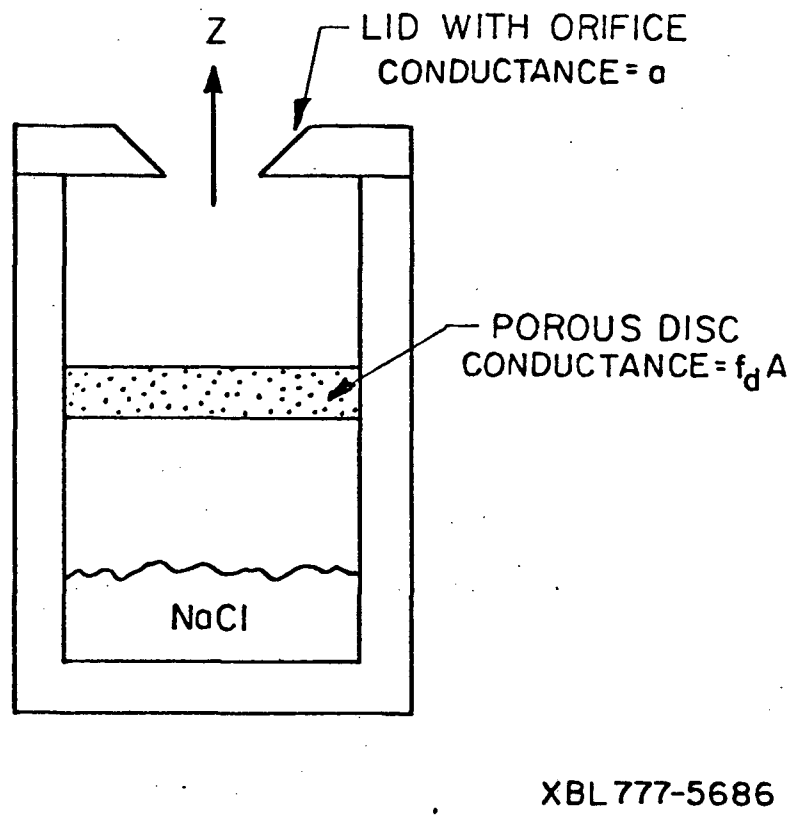
Z
LID WITH ORIFICE
CONDUCTANCE = a
POROUS DISC
CONDUCTANCE = $f_d A$
NaCl
XBL 777-5686

Fig. 4.

0 0 0 0 4 7 0 0 7 2 0

This report was done with support from the United States Energy Research and Development Administration. Any conclusions or opinions expressed in this report represent solely those of the author(s) and not necessarily those of The Regents of the University of California, the Lawrence Berkeley Laboratory or the United States Energy Research and Development Administration.

TECHNICAL INFORMATION DEPARTMENT
LAWRENCE BERKELEY LABORATORY
UNIVERSITY OF CALIFORNIA
BERKELEY, CALIFORNIA 94720