0 0 0 0 4 7 0 9 2 1 3

UC-34d

Submitted for Publication

LBL-6102
Preprint c.1

DATA SELECTION THROUGH BARRELET MOMENTS

RECEIVED
LAWRENCE
BERKELEY LABORATORY

OCT 20 1977

LIBRARY AND
DOCUMENTS SECTION

D. M. Chew

March 1977

Prepared for the U. S. Energy Research and
Development Administration under Contract W-7405-ENG-48

For Reference

Not to be taken from this room

LAWRENCE BERKELEY LABORATORY
UNIVERSITY OF CALIFORNIA
BERKELEY

LBL-6102 c.1

DISCLAIMER

This document was prepared as an account of work sponsored by the United States Government. While this document is believed to contain correct information, neither the United States Government nor any agency thereof, nor the Regents of the University of California, nor any of their employees, makes any warranty, express or implied, or assumes any legal responsibility for the accuracy, completeness, or usefulness of any information, apparatus, product, or process disclosed, or represents that its use would not infringe privately owned rights. Reference herein to any specific commercial product, process, or service by its trade name, trademark, manufacturer, or otherwise, does not necessarily constitute or imply its endorsement, recommendation, or favoring by the United States Government or any agency thereof, or the Regents of the University of California. The views and opinions of authors expressed herein do not necessarily state or reflect those of the United States Government or any agency thereof or the Regents of the University of California.

0 0 0 0 4 7 0 9 2 1 4

(Submitted for publication) LBL-6102

DATA SELECTION THROUGH BARRELET MOMENTS*

D. M. Chew†

Lawrence Berkeley Laboratory
University of California
Berkeley, CA 94720

March 1977

ABSTRACT

We show how Barrelet's moment analysis can be used to help identify systematic errors in scattering data. Taking as an example π^+p elastic scattering data in the neighborhood of P_{lab} = 1.77 GeV/c, we demonstrate the usefulness of eliminating the less accurate experiments.

* Work prepared for the U. S. Energy Research and Development Administration under Contract W-7405-ENG-48

† On leave from the University of Paris VI, Paris, France.

I. Introduction

In amplitude analysis of polarization and differential cross section measurements it is natural to amalgamate data at the same or nearby energies with the aim of increasing the total angular range covered and (or) decreasing the statistical error. Because, however, some experiments have systematic error larger than the statistical error, an uncritical amalgamation may degrade the information from reliable experiments and (or) generate qualitatively erroneous amplitudes. We show in this paper how Barrelet's method of analysis by moments can assist in the identification of systematic errors. After explaining the principle of our approach we assess π^+p elastic data at p_{lab} = 1.77 GeV/c, the energy chosen for a recent amalgamation by H. P. Jakob, and we discuss the amplitude differences that result when inaccurate data are excluded. We shall also compare to an amalgamation which lumps together data from a relatively large energy interval centered in this same region.

II. Principle

Barrelet[1] originally developed his method[2] for use with individual experiments that each cover a finite portion of the physical angular interval $a < \cos\theta < b$. In this interval the differential cross section is represented by a superposition of orthonormal pseudopolynomials $p_\ell(\cos\theta)$:

$$\frac{d\sigma}{d\Omega} \approx \sum_{\ell=0}^{N_1} A_\ell p_\ell(\cos\theta) \qquad (1)$$

The pseudopolynomials are defined with respect to a weighting norm $n_p(\cos\theta)$ such that

$$\int_a^b d(\cos\theta)\; p_\ell(\cos\theta) p_{\ell'}(\cos\theta)\; n_p\;(\cos\theta) = \delta_{\ell\,\ell'} \quad , \qquad (2)$$

the moments A_ℓ being then calculated from the formula

$$A_\ell = \int_a^b \frac{d\sigma}{d\Omega}(\cos\theta)\ p_\ell(\cos\theta)\ n_p(\cos\theta)\ d(\cos\theta) \qquad (3)$$

With data sufficiently dense in $\cos\theta$ the latter quadrature, when carried out with care, allows translation of the statistical error on individual data points into statistical errors for the moments A_ℓ. Barrelet chooses the truncation point N_1 of the polynomial expansion on the basis that A_ℓ is theoretically expected to tend smoothly toward zero for ℓ sufficiently large. As soon as the error in the moments begins to overlap zero Barrelet terminates the expansion in Eq. (1); to go further is statistically meaningless. The parameter N_1 is determined by the data, not guessed. For spin 0- spin 1/2 elastic scattering where the polarization P can be measured, one may make a similar analysis of $P\ \frac{d\sigma}{d\Omega}$, leading to a second set of moments B_ℓ with $\ell < N_2$.

The weighting norm is to be chosen so as to give comparable weight to all data points in the calculation of the moments. For example, if the data has a strong forward peak, the weight function $n_p(\cos\theta)$ should be correspondingly depressed in the forward region. With an inappropriately chosen norm, data from regions of low cross section will be overwhelmed by data from regions of high cross section, with loss of information in passing from data to moments.

A major advantage of the Barrelet method of data analysis with respect to least-square polynomial fits is that the latter permit no objective way to determine the order of the polynomial. Barrelet's truncation points N_1 and N_2 are objectively fixed by the statistical errors. The polynomial fit arrived at through Formulas (1) and (3) contains all the

information in the data and adds no spurious information.

When several sets of data exist at the same energy we may analyze each by the Barrelet method and compare the polynomial fits that result. Systematic discrepancies between different sets of data then are clearly revealed. Compatible data may be safely combined, but where there are incompatibilities one must not amalgamate.

III. Example of π^+p Elastic Scattering Near 1.77 GeV/c

We consider π^+p elastic data near $p_{lab} = 1.77$ GeV/c in order to illustrate our approach. The first question is the choice of weight function for the determination of moments. At this energy there is a strong forward peak, Fig. 1 showing the combined data from 3 different experiments. The forward peak has a roughly exponential shape with a width of ~ 0.1 in $\cos\theta$. In the region outside the forward peak there are oscillations about an average magnitude that is about 1/50 that in the forward direction. We are thus led to choose for our weight function

$$n_p'(\cos\theta) = \frac{.02}{e^{-10(1-\cos\theta)} + .02} \tag{4}$$

It has been verified that the precise choice is unimportant to the polynomial fit, provided the forward peak is not allowed to overwhelm the remainder of the angular interval in the calculation of moments.

We consider five sets of differential cross section measurements,[3] to be designated A70, K71, A74, C68 and Ò72, covering $\cos\theta$ intervals shown in Column 3 of Table I. Three of the measurements, A70, K71 and A74, span the forward hemisphere; let us begin by comparing these. Fig. 1 shows the three Barrelet-polynomial fits, which clearly reveal systematic

incompatibility. Which data should be eliminated? We may here take advantage of an accurate value for $\frac{d\sigma}{d\Omega}$ at $\theta=0$ from the combination of total cross sections and dispersion relations[4]. Extrapolating the three polynomial fits to $\theta=0$, as shown in Fig.1 , we find that A70 and K71 fall below the correct value by several standard deviations while A74 is within one standard deviation. We therefore eliminate A70 and K71* and proceed to compare A74 with C68 and O72, experiments that are confined to the backward hemisphere.

Because of the smallness of the overlap region between A74 and the two backward-direction experiments we use now a different technique. The Barrelet polynomial fit to A74 yields an acceptable chi-squared value of about 2 per data point, but if we add in C68 and O72 and make a new moment analysis we find an unacceptable polynomial fit of the combined data -- χ^2 greater than 10 per data point. In other words the backward hemisphere portion of A74 is not consistent with C68 and O72 (Fig.2).

Superficial examination of the backward-hemisphere data, displayed in Fig. 2, shows that O72 and C68 are in reasonable agreement with each other, the agreement becoming especially good near $\cos\theta=-1$. Since A74 does not extend beyond $\cos\theta=-0.9$, we have no alternative to accepting O72 and (or) C68 in the interval $-1.0 < \cos\theta < -.9$. On the other hand, for $-.9 \cos\theta \lesssim -.6$, a choice must be made between incompatible experiments. Our criterion for data selection in this interval is based on a smooth preliminary interpolation between the region $-.6 < \cos\theta$ controlled entirely by A74 and the region $\cos\theta < -0.9$ controlled entirely by O72 and C68. Such a preliminary polynomial interpolation, shown in Fig. 2, is provided by the Barrelet moment analysis of the combined data

*Experiment K71 would be in agreement with A74 for $-0.7 < \cos\theta$ if K71 were uniformly normalized upward by a factor 1.17. In contrast, A70 has a systematically different shape from A74(See Fig. 1d).

from all the experiments. We then objectively eliminate all data points whose deviation from this interpolation has a chi-squared greater than 9. As one might expect, such a criterion tends to eliminate points at the extremes of the angular intervals studied. Roughly speaking, A74 data is discarded for $\cos\theta < -0.7$ and 072 data for $-.75 < \cos\theta$. This criterion would not exclude any C68 data, even though the last three points ($\cos\theta \simeq -0.6$) are compatible with 072, because these points have large errors. For the sake of consistency, these three points also have been dropped. Fig. (3) shows a plot of the χ^2 for each data point in the backward region. A moment analysis of the remaining combined data, exhibited in Fig. 4b, leads to the indicated polynomial fit -- whose χ^2 is about 1.2 per data point. Extrapolation to $\theta=0$ agrees almost exactly with the independently-determined forward differential cross section.[4] (12.63 vs 12.5)

IV. Effect of Data Selection on Barrelet Zeros

A convenient way of assessing the consequence of our data selection for amplitude determination is in terms of Barrelet zeros. Amplitude zeros are also zeros of the analytic function of $w \equiv e^{i\theta}$ whose even and odd parts in $(\theta-\pi)$ are, respectively, $\frac{d\sigma}{d\Omega}$ and $P\,\frac{d\sigma}{d\Omega}$.[1] The total number of zeros corresponds to the maximum ℓ values in the moment expansions, while the values of the moments become reflected in the positions of the zeros, which carry corresponding statistical errors. Information in the experimental data thus translates into information about the number and location of zeros.

In order to determine the zeros we must analyze $P\,\frac{d\sigma}{d\Omega}$ as well as $\frac{d\sigma}{d\Omega}$. The polarization measurement M75 has no serious competitor at the energy in question. Combining this polarization data with our selected differential cross section data we find the ten zeros displayed in Fig. 5* The

*Our resolution of the discrete ambiguity between zeros at $w=a$ and $w=\overline{a^{-1}}$ may be regarded as arbitrary, although the choice shown in Fig. (5) is in fact suggested by unitarity-causality considerations that will be described elsewhere. (Ref. 5).

corresponding polynomial fits are shown in Fig. (4). In Ref. (6), we discuss the remarkable fact that all ten of these zeros whose collective information content corresponds to our selection of data lie sufficiently close to the physical region as to be candidates for true zeros of the amplitude (and not merely artifacts of data fitting). In the present paper our emphasis is on the effect for the number and positions of zeros from including some or all of the data that Barrelet moment analysis has recommeded eliminating.

We begin with what some readers may regard as a "straw man", the collection of all <u>five</u> measurements of $\frac{d\sigma}{d\Omega}$ and <u>two</u> measurements of P, adding A70 to M75. Barrelet moment analysis of this conglomerate (Fig. 6) leads to the 12 zeros of Fig. (8a). Were the effect of the inaccurate data merely to add two <u>distant</u> zeros, leaving undisturbed (within errors) the positions of the original ten zeros, one might say that no information, at any rate, had been lost. But new zeros appear in Fig. (8a) relatively close to the physical region, and zeros that were sharply determined by the accurate data taken alone have been significantly shifted. Fig. (8b) shows the 10 zeros that result when the polarization measurement A70 is eliminated but all the differential cross section data continue to be included (Fig. 7). Again there is loss of information.

Readers may find more interesting the comparison to an analysis where efforts are made to be discriminating but without benefit of Barrelet moments either to eliminate inaccurate data or to objectively fix the order of the polynomial. A recent analysis has been carried out at 1.77 GeV/c by Jakob,(7) who eliminated certain data by "eye" using reasonable although nonobjective criteria. In order to keep as separate as possible the two different issues of data selection and optimal

polynomial representation, we show first in Fig. (9) Jakob's selection of data and its polynomial representation through Barrelet moments. The 12 corresponding zeros shown in Fig. (10a) exhibit the same type of information degradation as described in the preceding paragraph.

On the other hand, Jakob actually analyzed his collection of data not by the Barrelet method but rather by least-square fitting and he constrained his $\frac{d\sigma}{d\Omega}$ to pass through the precisely-known $\theta=0$ value. This approach led to the 12 zeros shown in Fig. (10b). Again we conclude that information present in the most accurate data has been degraded. (Note that errors cannot systematically be attached to the positions of zeros based on least-square fitting.)

Our final comparison is with a larger amalgamation by Kelly that collects data within energy bins of 50 MeV/c width.[8] Fig. (12) displays the 10 zeros that correspond to a least-square polynomial fit of data (Fig. 11), centered at 1.790GeV/c Increasing the statistics has tended to overcome the qualitative distortion due to inaccurate individual experiments, but a price has been paid. The process of averaging over energy is almost guaranteed to mishandle zeros that are extremely near the physical region. Such zeros produce polarization close to ± 1, but the zeros tend to move rapidly with energy and so $|P|$ will be substantially below 1 at all energies except those close to where the zero is actually crossing the physical region*. For example, with an energy bin of width 50 MeV/c around 1900 MeV, even if a zero crosses the physical region within the interval, one expects[5]

---

*Except if the zero trajectory crosses twice, like the (A) trajectory around $\Delta(1900)$ (5), where $P = +1$.

an average value of P across the bin no larger than .8. In consequence, combining data from neighboring energies systematically overestimates the distance of the nearest zeros from the physical region. A comparison (Fig. 10) of these zeros with those of Fig. (5) shows this effect. (As will be discussed eleswhere, the ability to locate accurately those zeros closest to the physical region is crucial to resolution of the discrete ambiguity.[5]) Table II summarizes the results of the above Barrelet moment analysis.

Summary

We have shown how Barrelet moment analysis can identify systematic errors in scattering data and have used π^+p elastic scattering at $p_{lab} = 1.77$ GeV/c to demonstrate improvement in amplitude analysis from eliminating inaccurate experiments.

Acknowledgements

We are very grateful to G. F. Chew for helpful and enlightning discussions and to H. P. Jakob who stimulated this study. We thank R. Ely and G. Gidal for their very kind encouragement and interest in this work. We acknowledge the help of R. Kelly in providing the πN data tape and preliminary amalgamation results.

REFERENCES

1. E. Barrelet,Thesis (Paris), unpublished(1970); Nuovo Cimento 8A, 331 (1972).

2. E.Barrelet and M.G.Fouque,Program Moulin, Ecole Polytechnique (1969), completed for the errors by M. Urban, LBL-4809 (Feb. 76).

3. The abreviated references represent the first letter of name of the first author with the year of publication of the paper:

   A70 M. G. Albrow et al., Nucl. Phys. B25 , 9 (1970).

   A74 K.Abe et al., Phys. Rev. D10, 3556 (1974).

   C68 A. S. Carroll et al., Phys. Rev. 177 , 2047 (1968).

   K71 G. E. Kalmus et al., Phys. Rev. D4, 676 (1971).

   M75 J. F. Martin et al., Nucl. Phys. B89, 253 (1975).

   O72 R. J. Ott et al., Phys. Letters 42B, 133 (1972).

4. G. Hohler ,H. P. Jakob and F. Kaiser,Tables of pion-Nucleon Forward amplitudes TPK 7617, University of Karlsruhe,May 1976.

5. D. M. Chew ,E. Barrelet and M. Urban,"Determination of the elastic π^+p zero trajectories from 1.1 to 2.2 GeV center of Mass energy" LBL-4644 (under completion and revision,May 1977);
   for preliminary results,see D.M.Chew and M.Urban,LBL-4656(June 1976), Proceedings of the Topical Conference on Baryon Resonances,Oxford 5-9(July 1976), p. 156, and the discussion at the end of the talk.

6. D. M. Chew ,LBL-6406 (March 1977) ," Barrelet zeros and the forward diffraction peak " ,submitted for publication.

7. H. P. Jakob, LBL-6151 (February 1977), submitted for publication.

8. R. Kelly, Particle Data Group (Private Communication).

TABLE CAPTION

TableI: Caracteristics of the data used in this analysis.

Table II: Caracteristics of the Barrelet moment analysis.

FIGURE CAPTION

1. Differential cross section and polynomial approximation through Barrelet moments of data of Ref.(3): A74 (▲),K71 (+), A70 (✕).
   Figure (1d) combines the 3 polynomial approximations.The top (lower) curve is A74 (K71) ;the dotted one is A70. The arrow indicates $(d\sigma/d\Omega)_{\theta=0}$ as given by the dispersion relations and the total cross section measurement[4].

2. Barrelet-moment global fit of data from Ref(3) :A74 (▲),C68 (⊞),072(◆).

3. χ^2 vs cosθ for each of the data points of figure 2, A74(●),C68(□),072(◇).

4. Finally selected data:parts of A74(▲),C68(⊞), 072(◆) for the differential cross section ; M75 for the polarization.

5. The ten zeros with their statistical errors corresponding to Fig.4. The dashed boundaries correspond to the rho pole as the nearest singularity.The choice of the resolution of the discrete ambiguity corresponds to the results of Ref. (5).

6. All data at ~1.770 GeV/c :A74(▲),K71(+),A70(✕),C68(⊞) and 072(◆) for the differential cross section and M75(▲) ,A70(✕) for the polarization , and the global polynomial approximation through Barrelet moments.

7. The same data as of Fig.6 for the differential cross section and the data of M75(▲) only for the polarization ,and the polynomial approximation through Barrelet moments.

8. (a) The 12 zeros corresponding to Fig.6
   (b) The 10 zeros corresponding to Fig.7.
   The zeros with dots represent the zeros of Fig.5 for comparison.

9. Jacob's selection of data [7] and the polynomial approximation from the Barrelet moments.

10. (a) The 12 zeros from the Barrelet-moment analysis of Fig.9 .The zeros with dots rerpesent the zeros of Fig.5 for comparison.
    (b) The 12 zeros from a least sqare fit to the data of Fig.9,from Ref.(7), with the resolution of the discrete ambiguity of Ref.(5).

11. The data points represent the results of a least square fit to the combination[8] of all data between 1.765 and 1.815 GeV/c ;the errors have been arbitrarily given (5% for the points of the differential cross section,and .05 for the polarisation) .The curve is the polynomial approximation as given by the Barrelet moments.

12. The 10 zeros from Barrelet moment analysis of Fig.11.The dots show the zeros of Fig.5 for comparison.

Table I : Caracteristics of the data used in this analysis.

Data[3]	P_{lab}	cosθ interval (extreme measured values)		No. of points	Doubt cast Interval	Doubt cast reasons	See Fig.	Comments
A70	1.770	-.840	.920	30	all	$(d\sigma/d\Omega)_{\theta=0}$	1c	
K71	1.770	-.975	.970	42	all	$(d\sigma/d\Omega)_{\theta=0}$	1b	need renormali -zation.
A74	1.770	-.8875	.9125	67	cosθ<-.7	χ^2/point > 9	2	
C68	1.780	-.987	-.610	20	cosθ>-.65		2	
O72	1.768	-.922	-.527	15	cosθ>-.75	χ^2/point > 9	2	
A70	1.770	-.840	.920	30	all	too small statictics and too ≠ from M75	6	
M75	1.768	-.967	.900	40			7	

0 0 0 0 4 7 0 9 2 2 0

Table II : Caracteristics of the Barrelet moment analysis

Data[3]	$\cos\theta$ interval of polynomial approximation		$(d\sigma/d\Omega)_{\theta=0}$ (vs 12.5 of Ref.4)	χ^2/point	See Fig.
A70	-.885	.925	10.1	1.1	1c
K71	-.975	.980	10.6	1.4	1b
A74	-.900	.920	13.0	1.35	1a
A74+ C68+ 072	-.975	.914	13.0	12.1	2,3
Selected A74+ C68+ 072	-.975	.914	12.6	1.2	4
All data of Ref (3)	-.975	.977	10.8	3.7	6
All data for $(d\sigma/d\Omega)$ and M75 for Polarization.	-.975	.914	10.2	3.8	7
Jakob's selection[7].	-1.0	1.0	11.1	10.5	9
All data with $1.765 < P_{lab} < 1.815$ GeV/c. (Ref.8)	-1.0	1.0	12.0	0.04*	11

* errors have been arbitriraly given to points of the polynomial fit (See Fig. 11 caption).

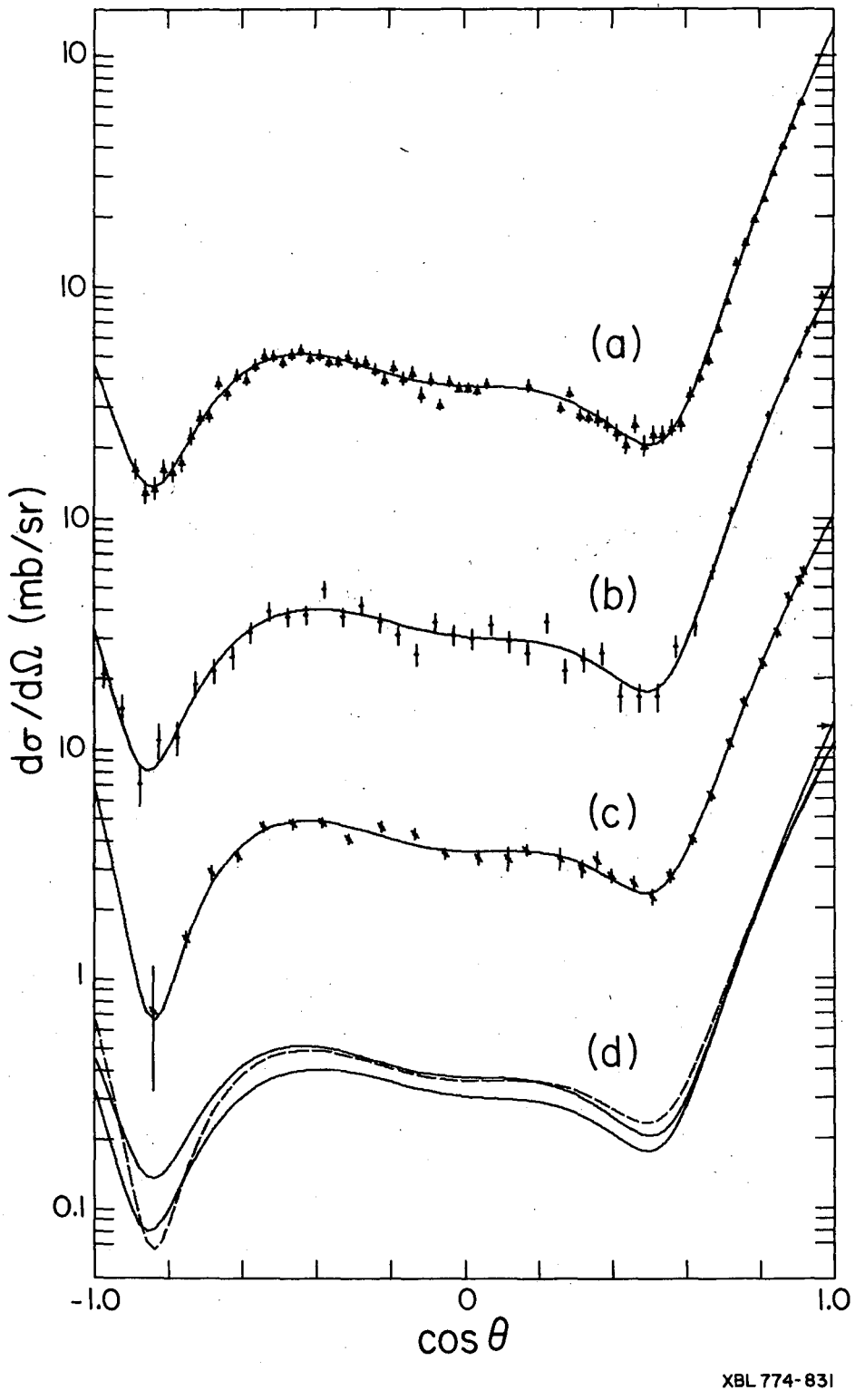

Fig. 1

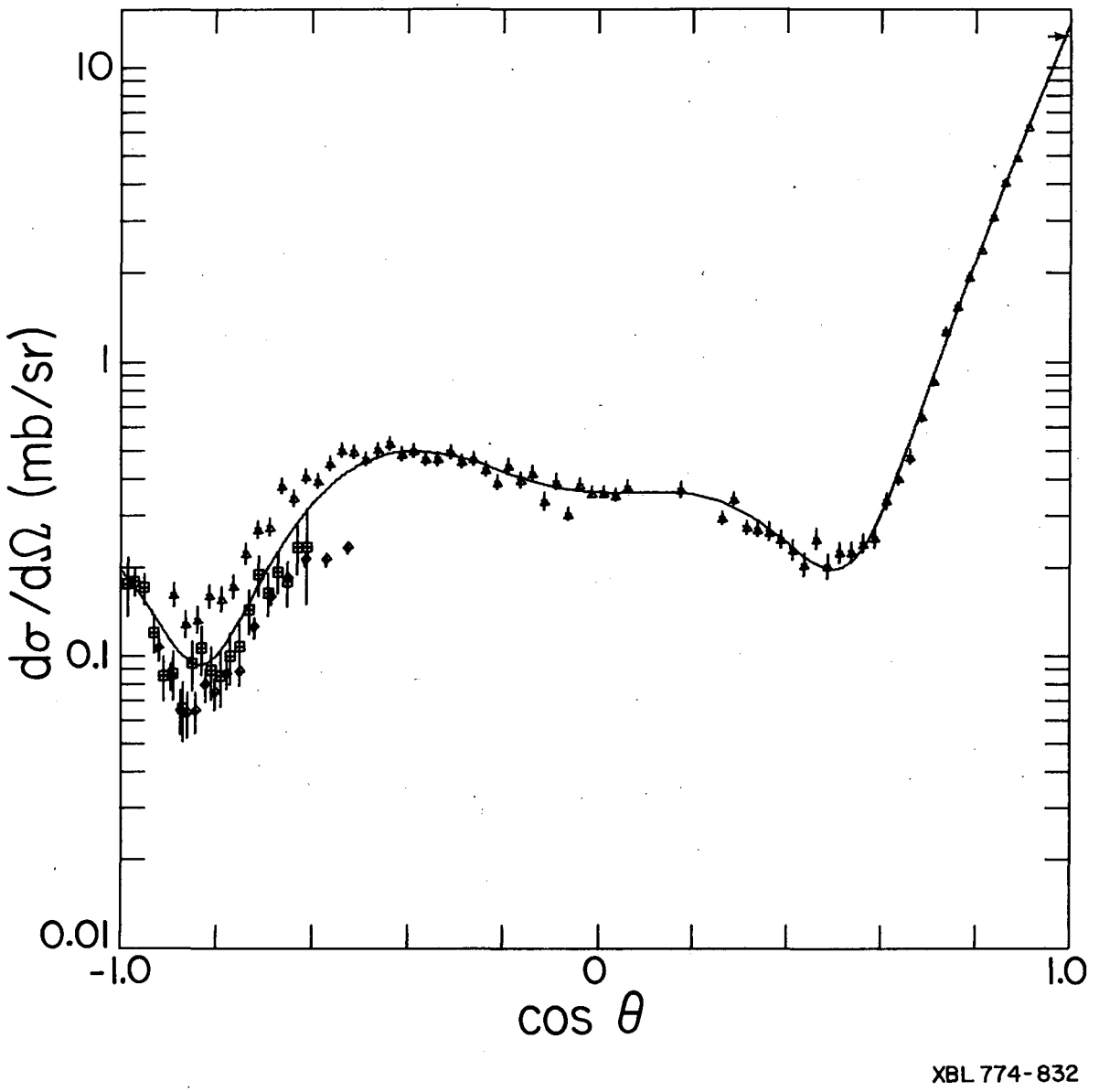

Fig. 2

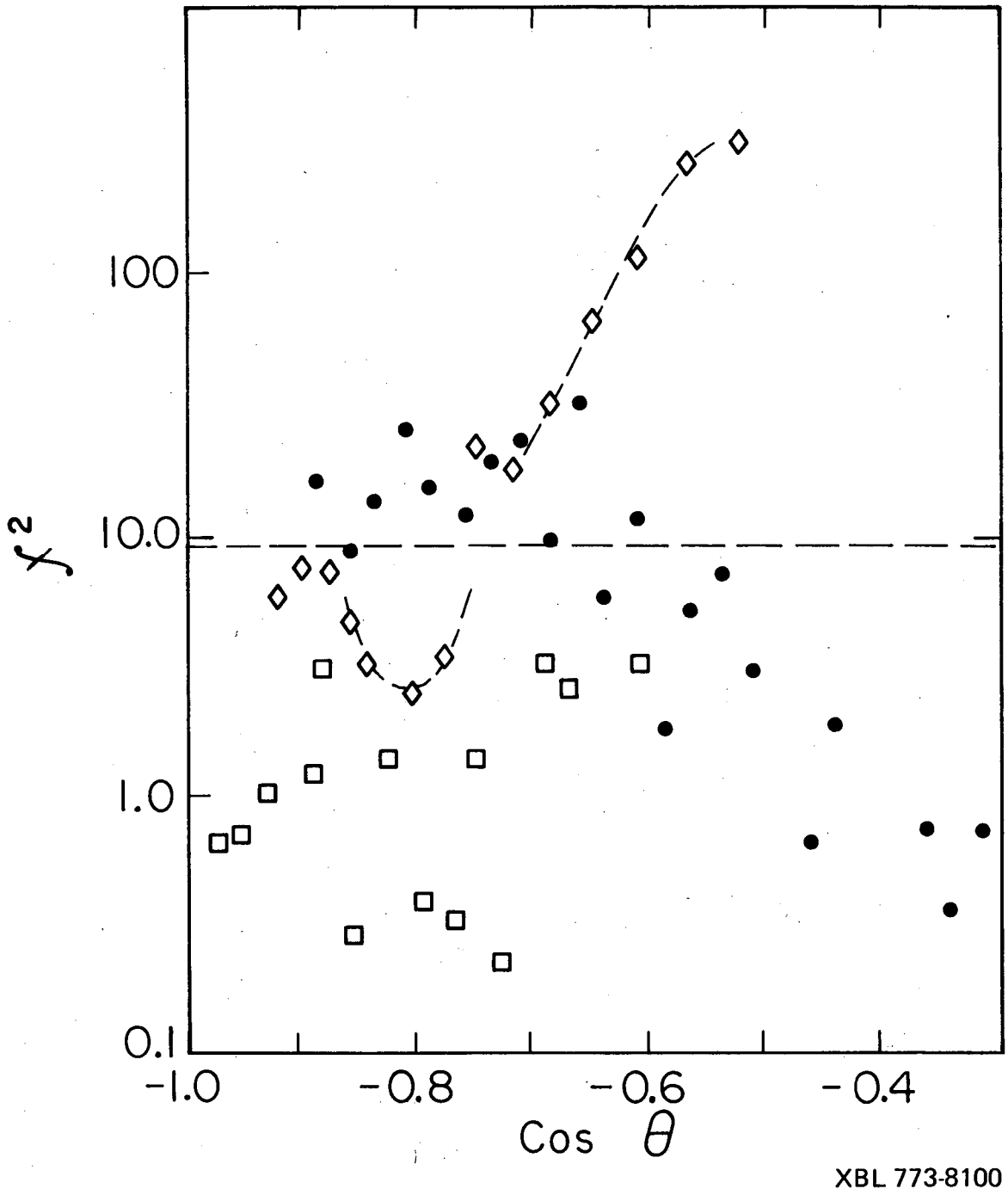

Fig. 3

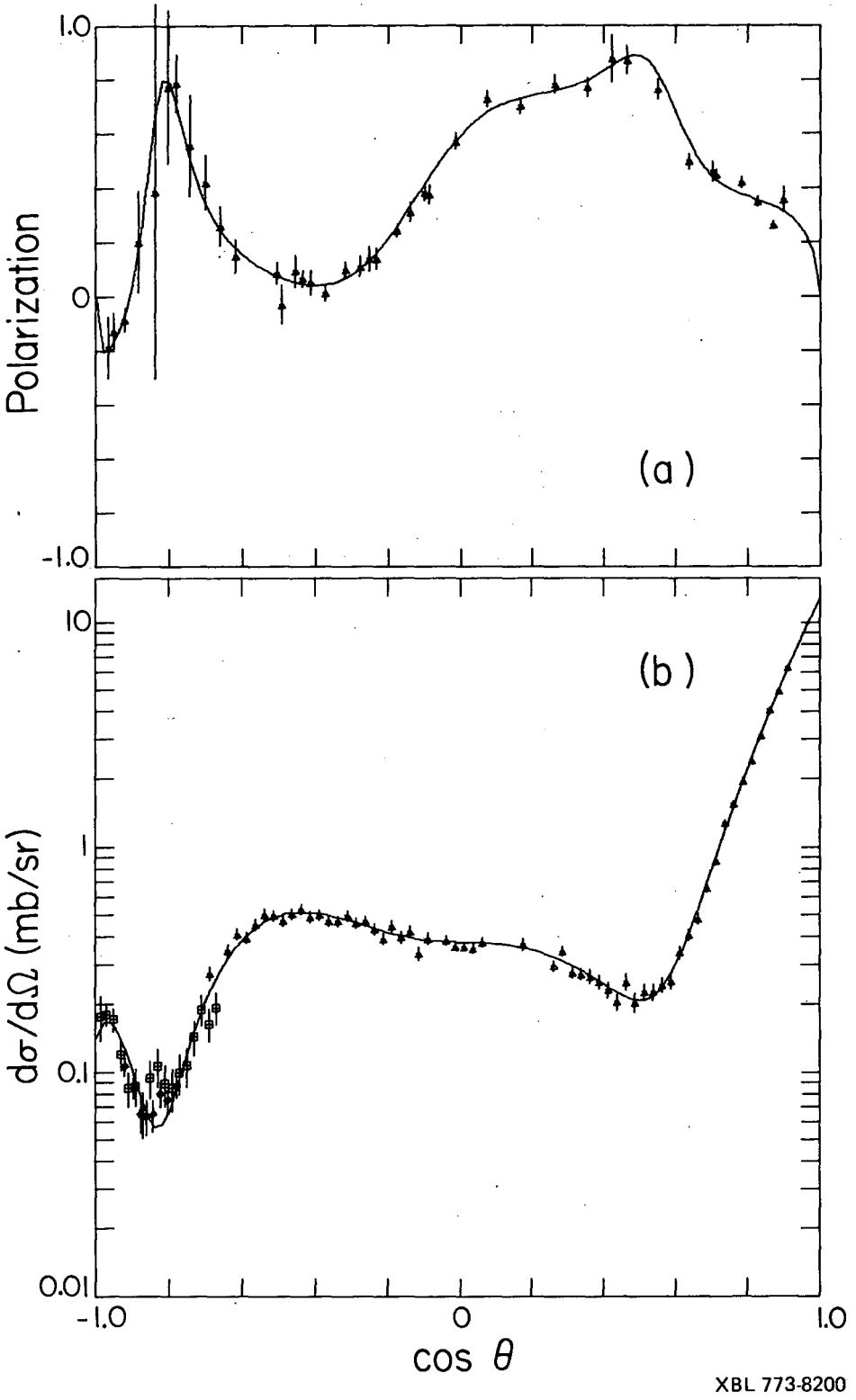
1.0
0
-1.0
Polarization
(a)
10
1
0.1
0.01
dσ/dΩ (mb/sr)
(b)
-1.0
0
1.0
cos θ
XBL 773-8200

Fig. 4

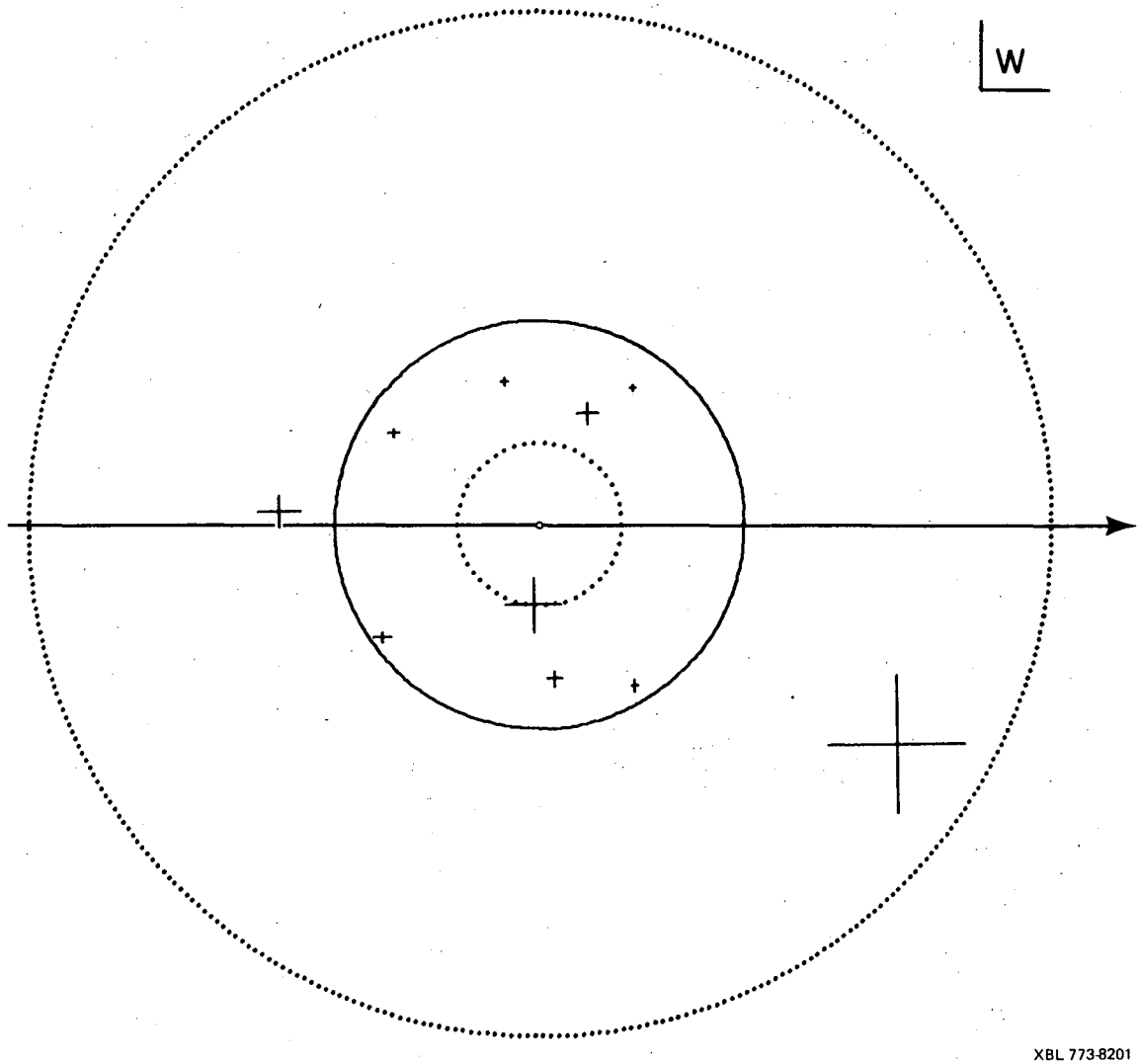

XBL 773-8201

Fig. 5

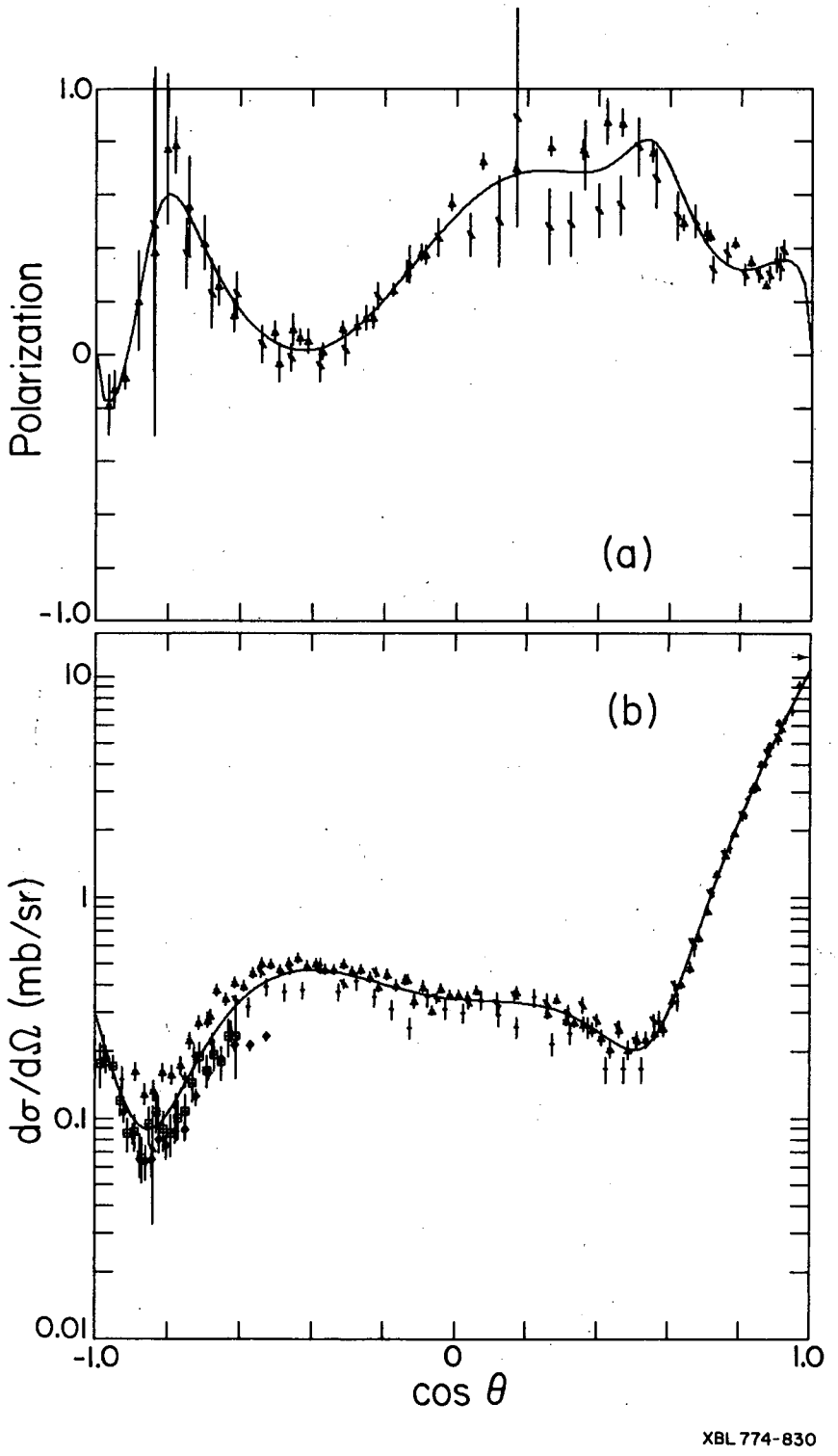
1.0
0
-1.0
Polarization
(a)
10
1
0.1
0.01
dσ/dΩ (mb/sr)
(b)
-1.0
0
1.0
cos θ
XBL 774-830

Fig. 6

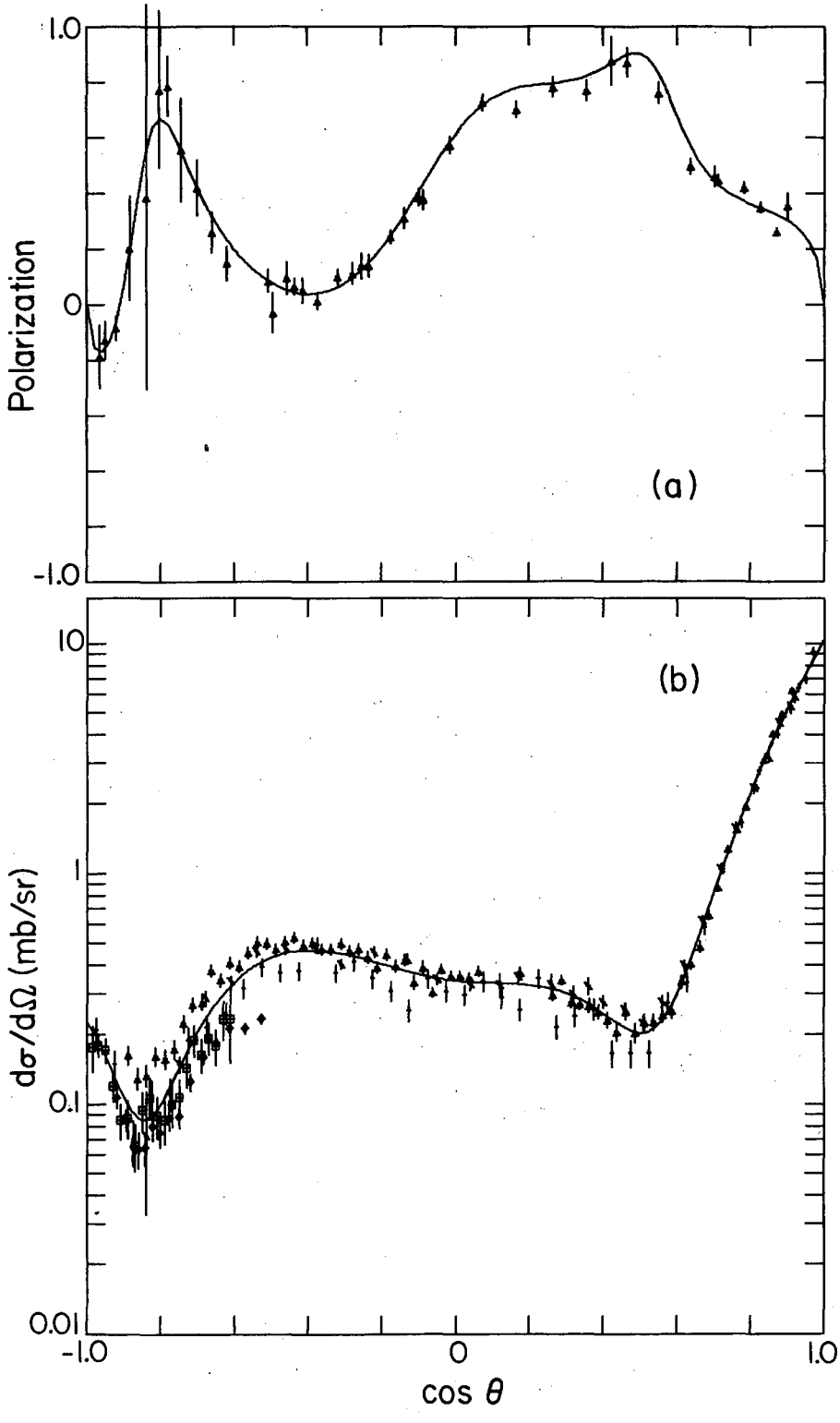

XBL 774-841

Fig. 7

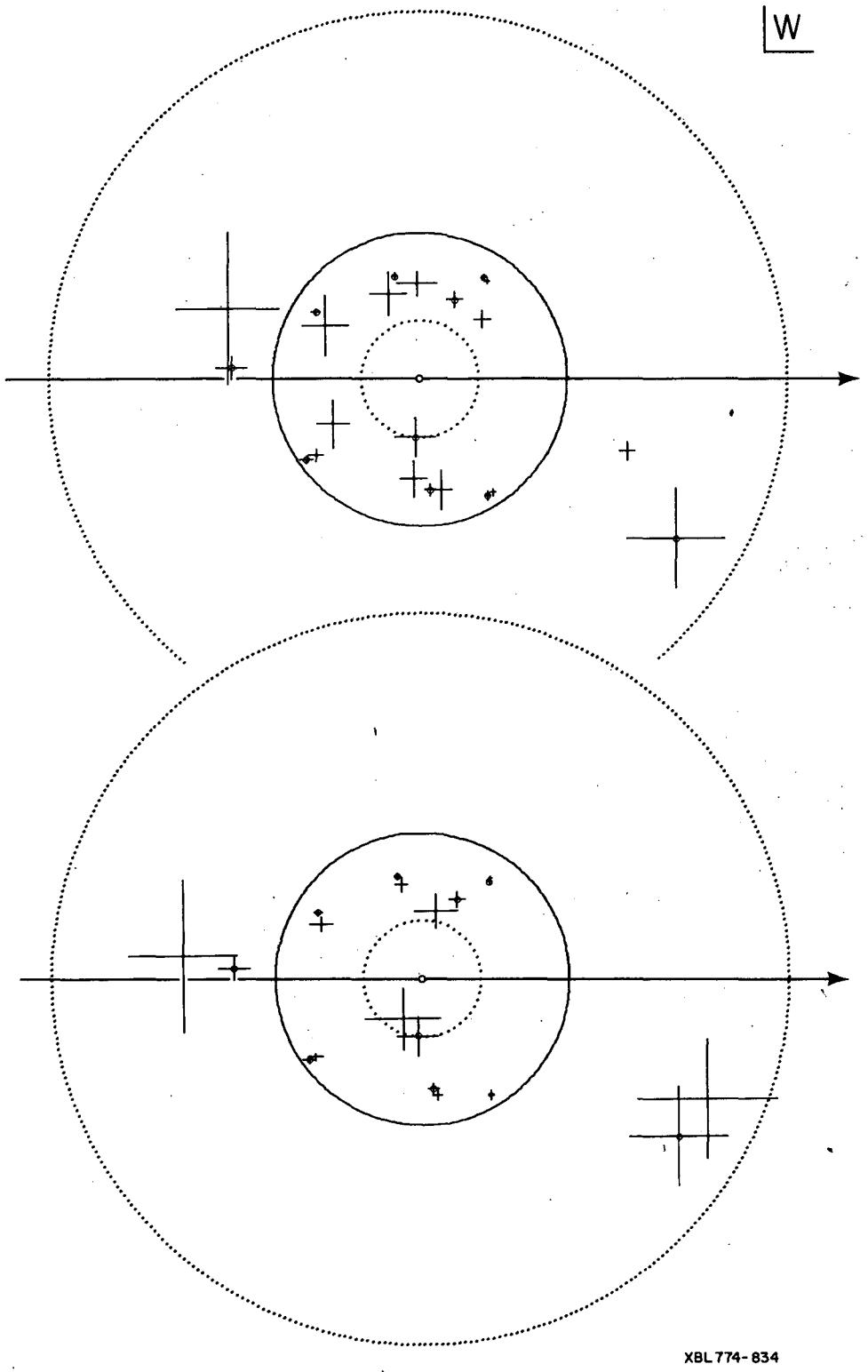

Fig. 8

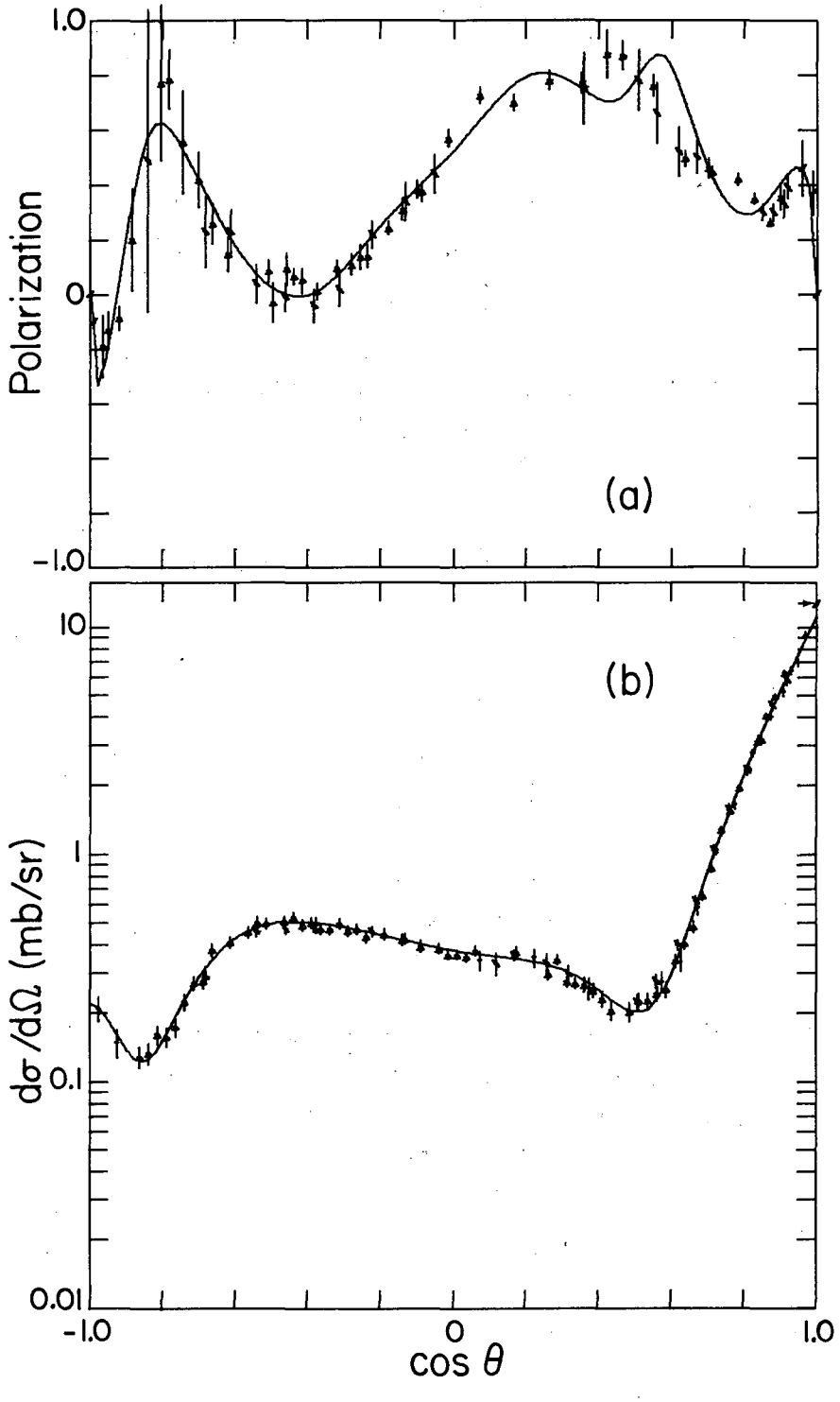

XBL 774-829

Fig. 9

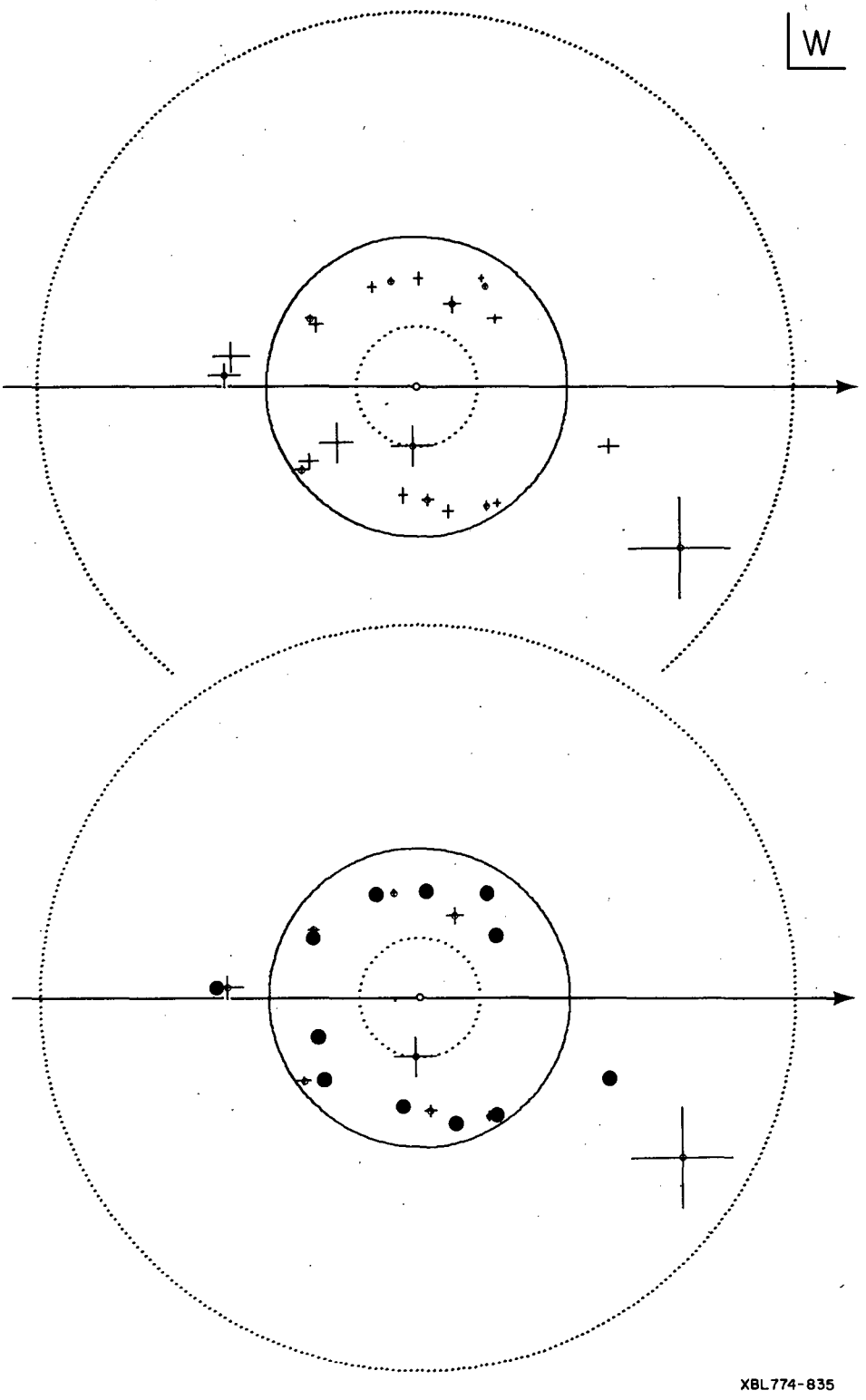

Fig. 10

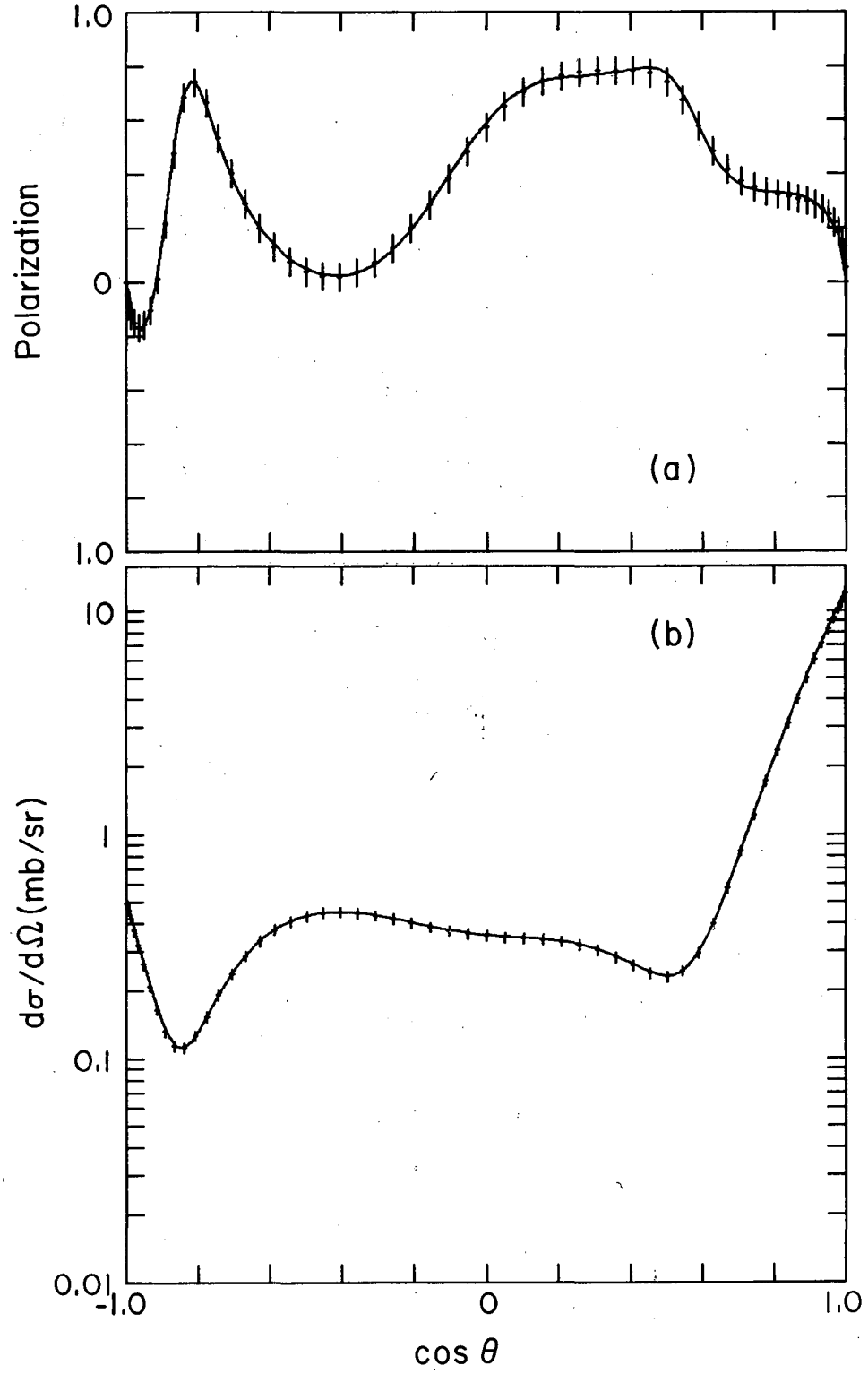

XBL 774-844

Fig. 11

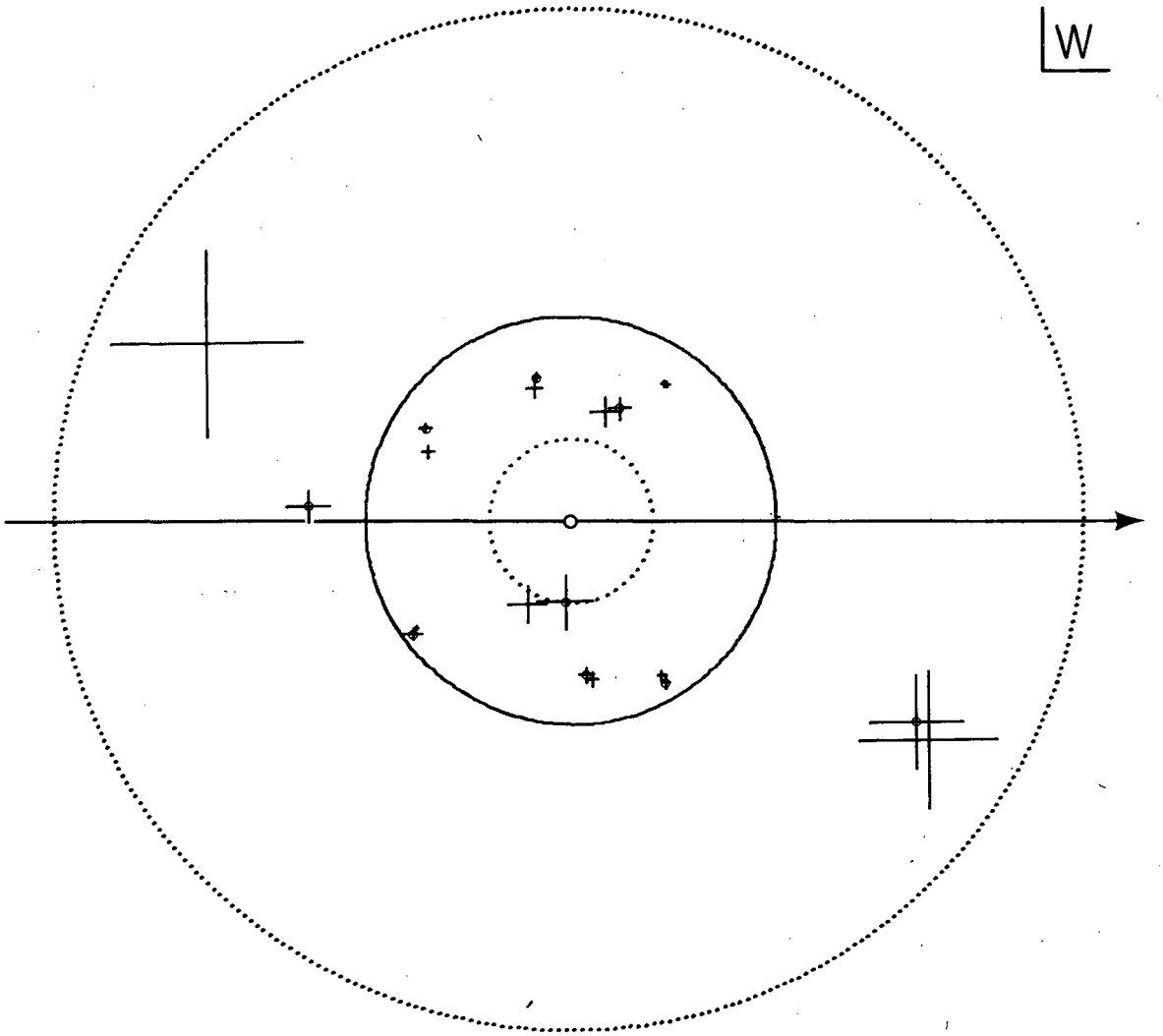

XBL 774-833

Fig. 12

0 0 0 0 4 7 0 9 2 2 7

This report was done with support from the United States Energy Research and Development Administration. Any conclusions or opinions expressed in this report represent solely those of the author(s) and not necessarily those of The Regents of the University of California, the Lawrence Berkeley Laboratory or the United States Energy Research and Development Administration.

TECHNICAL INFORMATION DIVISION
LAWRENCE BERKELEY LABORATORY
UNIVERSITY OF CALIFORNIA
BERKELEY, CALIFORNIA 94720