0 0 0 0 4 7 0 9 8 4 7

UC-34c

LBL-6147 c.1

Presented at the Orbis Scientiae 1977
Conference, Coral Gables, FL,
January 17 - 20, 1977

POLARIZED TARGET EXPERIMENT AT FERMILAB

Owen Chamberlain

January 1977

Prepared for the U. S. Energy Research and
Development Administration under Contract W-7405-ENG-48

For Reference

Not to be taken from this room

LAWRENCE BERKELEY LABORATORY
UNIVERSITY OF CALIFORNIA
BERKELEY

LBL-6147 c.1

LEGAL NOTICE

This report was prepared as an account of work sponsored by the United States Government. Neither the United States nor the United States Energy Research and Development Administration, nor any of their employees, nor any of their contractors, subcontractors, or their employees, makes any warranty, express or implied, or assumes any legal liability or responsibility for the accuracy, completeness or usefulness of any information, apparatus, product or process disclosed, or represents that its use would not infringe privately owned rights.

0 0 1 0 4 7 0 9 8 4 8

LBL-6147

Polarized Target Experiment at Fermilab

Owen Chamberlain

Lawrence Berkeley Laboratory
University of California
Berkeley, California 94720

Talk at Coral Gables, January 17, 1977.

Work performed under the auspices of the U. S.
Energy Research and Development Administration.

I am reporting today on Experiment 61 at Fermilab, which is a large collaboration aimed at measuring the polarization in π^+p, π^-p, and p-p elastic scattering. We have preliminary results from our first run at 100 GeV.

The experimenters are: From Harvard, Walter Johnson (actually Suffolk University), Bob Kline, Margaret Law, and Frank Pipkin. From Yale, Jim Snyder and Mike Zeller. From the Argonne, Paul Auer, Dan Hill, Bernie Sandler, and Aki Yokosawa. From Fermilab, Alan Jonckheere and Peter Koehler. From Berkeley, Walter Brückner, Owen Chamberlain, Gil Shapiro, and Herb Steiner.

The apparatus is a double-arm spectrometer, as shown in plan view in Fig. 1. The scattering target is a polarized proton target (PPT) 8 cm in length as measured along the beam direction. The target material is ethylene glycol. Its hydrogen can be polarized to 80% at about 0.4 K.

Each spectrometer arm involves magnetic analysis. In all there are 16 planes of proportional wire chambers (PWC) to determine particle trajectories. No Cherenkov counters are placed in the beam, as the beam is thought to be too intense to allow them to be practible. Two threshold Cherenkov counters are located in the forward arm to identify the forward (scattered) particle. One counter should count pions, the other both pions and kaons. Ninety-seven percent of pions are identified as such by the first Cherenkov counter.

Identification of elastic scattering of pions or protons on protons is relatively straightforward. Discarding, for present purposes, the momentum measurement on the fast forward (scattered) particle (on the basis of it's being relatively inaccurate) we have effectively a 3-constraint fit to elastic scattering on free protons. One expression of this fit is the calculation of 3 components of excess momentum. A plot of numbers of events versus one component of this excess momentum is shown in Fig. 2, which shows

a free hydrogen peak of width about 20 MeV/c standing on a broader background consisting mainly of quasi-elastic scattering events (approximately elastic scattering from bound protons exhibiting Fermi motion).

Alternatively we may calculate a χ^2 value for each event expressing its discrepancy from an apparent elastic kinematics in the plane of the scattering as defined by the common plane of beam center line and recoiling particle and then separately calculate the degree of non-coplanarity, expressed as $\Delta\phi/\varepsilon_\phi$ (the descrepancy in azimuthal angle ϕ divided by the expected error in ϕ for that event). Figure 3 shows the χ^2 distribution for 2 classes of events based on values of $\Delta\phi/\varepsilon_\phi$. The peak at low χ^2 shows the elastic scatterings on free protons. Figure 4 shows the distribution in $\Delta\phi/\varepsilon_\phi$ for 2 classes of events based on χ^2 value. The peak at zero shows the predominant coplanarity of the low-χ^2 events and confirms that there are two criteria giving satisfactory agreement as to which events are elastic scattering on free protons.

A more controversial question concerns what beam monitor is to be used to compare the amount of effective beam on target for runs with positive and negative (upward and downward) target polarization. Table I lists the five available monitors in this experiment and the objections that may most easily be raised against relying on each. Noise levels in each monitor (as judged using the other monitors) are being investigated at present. Correlations with target polarization are also being investigated.

Fig. 5 shows our preliminary results for polarization in elastic π^--p scattering at 100 GeV. Strictly speaking, it is the asymmetry in the scattering off polarized protons that is measured. We rely on time-reversal invariance when we term it the polarization. Clearly these data are consistent with the polarization being everywhere very small at this energy.

For comparison there is shown in Fig. 6 the expected polarization based on scaling down the polarization results from lower energies in accordance with Regge theory and the accepted parameters of pomeron and ρ trajectories. Comparison of Figs. 5 and 6 indicates that our preliminary results are in accord with Regge theory.

Fig. 7 shows our preliminary results for π^+-p elastic scattering. Again the values of polarization tend to be quite small. A comparison with results from lower energies (not shown) again indicates no disagreement with Regge theory.

Our results are consistent with the mirror symmetry observed at lower energies--the positive-pion polarization being positive to about the same extent the negative-pion polarization is negative. This is telling us that the ρ trajectory and the pomeron trajectory couple in similar ways.

I had hoped to present comparable polarization results for p-p scattering. However, it has been pointed out to us that the results of Bunce, Handler, March, Martin, Pondrom, Sheaff, Heller, Overseth, Skubic, Devlin, Edelman, Edwards, Norem, Schachinger, and Yamin,[1] showing that Λ hyperons produced at high energies may be highly polarized, suggest that our proton beam might be somewhat polarized. If there should be a component of beam polarization normal to our (horizontal) scattering plane, then our measurements of polarization P would be contaminated with some (unknown) contribution from the correlation coefficient C_{nn}. For that reason no p-p results are presented here.

In the future we will be trying to extend the polarization measurements to larger values of -t. Large polarization values are expected to be found near the cross-section dip at $-t = 1.4\ (\mathrm{GeV})^2$ when the lab energy is about 300 GeV. It is amusing to attempt to predict whether or not it will be easier

to get polarizations significantly different from zero near the dip. Crudely speaking, the larger polarization should be a help and the low cross section should be a hinderance. The following argument gives a guide as to what one may expect.

We assume there is one large amplitude called A ($\propto \phi_1 + \phi_3$), one small amplitude called B ($\propto \phi_5$), and 3 other amplitudes small enough to be neglected. Then, assuming for the purposes of this argument that A is purely imaginary, we have

$$\frac{d\sigma}{dt} \simeq |A|^2 + |B|^2 \simeq (\mathrm{Im}\ A)^2,$$

$$P\,\frac{d\sigma}{dt} \simeq 2\ \mathrm{Im}\ [A^*B] \simeq -2\ (\mathrm{Im}\ A)(\mathrm{Re}\ B),$$

$$P \simeq \frac{-2\ \mathrm{Re}\ B}{\mathrm{Im}\ A}\ .$$

This polarization is to be compared with the uncertainty in the polarization, here assumed to be dominated by statistical uncertainties. For a given beam intensity and length of run the uncertainty in polarization P may be taken as

$$\Delta P = (C)^{-1/2}\left(\frac{d\sigma}{dt}\right)^{-1/2} \simeq (C)^{-1/2}(\mathrm{Im}\ A)^{-1}$$

where C is propotional to the beam intensity times the length of run. Then

$$\Delta P/|P| \simeq 1/\{2C^{1/2}|\mathrm{Re}\ B|\}.$$

This suggests that to get values of $\Delta P/P$ smaller than 1/3, so polarization is at least 3 standard deviations from zero, one should seek out regions in which Re B is suitably large in magnitude. It does not help, in first approximation, to have a small value of Im A. However, there is hope in the estimates given by Gordon Kane[2], shown in Fig. 8, that B ($\propto \phi_5$) may be almost as large in magnitude at $-t \simeq 1.3$ as at 0.3 $(\mathrm{GeV}/c)^2$.

In conclusion, our preliminary results appear to show no significant deviations from the predictions based on Regge theory and polarization measurements at lower beam energies. In the future we hope to press to as large values of -t as possible, in the hope of finding surprises. We will also be trying to increase our beam intensity with the aim of getting improved accuracy.

REFERENCES

[1] G. Bunce et al., Phys. Rev. Lett. 36, 1113 (1976).

[2] G. L. Kane, Proc. Conf. High Energy Physics with Polarized Beams and Polarized Targets (M. L. Marshak, Ed., 1976) Amer. Inst. Phys., New York, 1976, p. 43.

Table I. Available beam monitors and our primary objections to relying on each.

	Monitor Type	Principal Objections
1.	Counter telescope at 6°	Affected by beam steering
2.	Total counts in recoil arm	Is possibly polarization dependent
3.	Ionization chamber in beam	Affected by beam steering
4.	Coincidences between pole-tip counters	Affected by beam halo
5.	Counts in quasi-elastic background	Affected by level of liquid ^{3}He in the polarized target, therefore potentially different for different polarizations

FIGURE CAPTIONS

FIG. 1. Plan view of the apparatus. The magnet for the polarized proton target is called Zoltan. Wire proportional chambers are designated W. The Recoil Magnet and the magnet Hertz are used for momentum analysis. The Cherenkov counters are denoted by C. Dimensions are given for the configuration used at 100 GeV, but notice that the drawing shows a considerably foreshortened version of the forward arm of the system.

FIG. 2. Distribution of events in one component of missing momentum. The width of the free-hydrogen peak (about 20 MeV/c) is explained by angular variations among incident protons and such effects as multiple Coulomb scattering. The broader background is interpreted as quasi-elastic scattering on bound protons having Fermi motion.

FIG. 3. χ^2 distributions for coplanar ($\Delta\varphi/\varepsilon_\varphi$ small) and non-coplanar ($\Delta\varphi/\varepsilon_\varphi$ large) events. The χ^2 values reflect only the characteristics of each event as projected onto the scattering plane.

FIG. 4. Distributions in $\Delta\varphi/\varepsilon_\varphi$, the measure of deviation from coplanarity, for 2 classes of event based on χ^2. Low χ^2 means good fit to elastic scattering on a free proton for the event projected onto the scattering plane.

FIG. 5. Our preliminary results for the polarization in π^--p elastic scattering at 100 GeV.

FIG. 6. Expected results for the π^--p polarization at 100 GeV, based on lower-energy results as adjusted downward according to Regge theory. Note the similarity to the results shown in Fig. 5.

FIG. 7. Our preliminary results for the polarization in elastic π^+-p scattering at 100 GeV.

FIG. 8. Estimate given by Kane of the t dependence of the real part of the amplitude φ_5, suggesting it may have a magnitude near $-t \simeq 1.3$ nearly as large as at small values of -t.

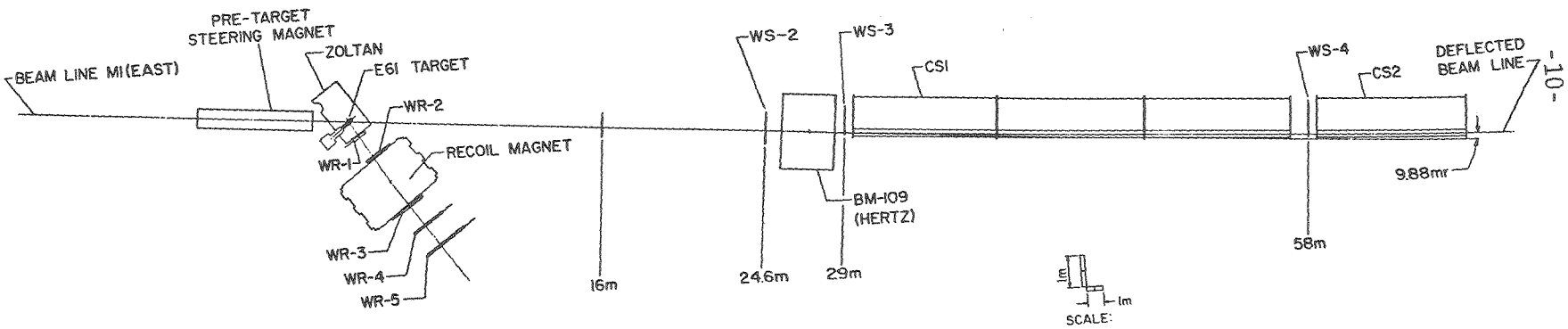
BEAM LINE MI(EAST)
PRE-TARGET
STEERING MAGNET
ZOLTAN
E61 TARGET
WR-2
WR-1
RECOIL MAGNET
WR-3
WR-4
WR-5
16m
WS-2
24.6m
WS-3
29m
BM-109
(HERTZ)
CS1
WS-4
58m
CS2
DEFLECTED
BEAM LINE
9.88mr
1m
1m
SCALE:

Fig. 1

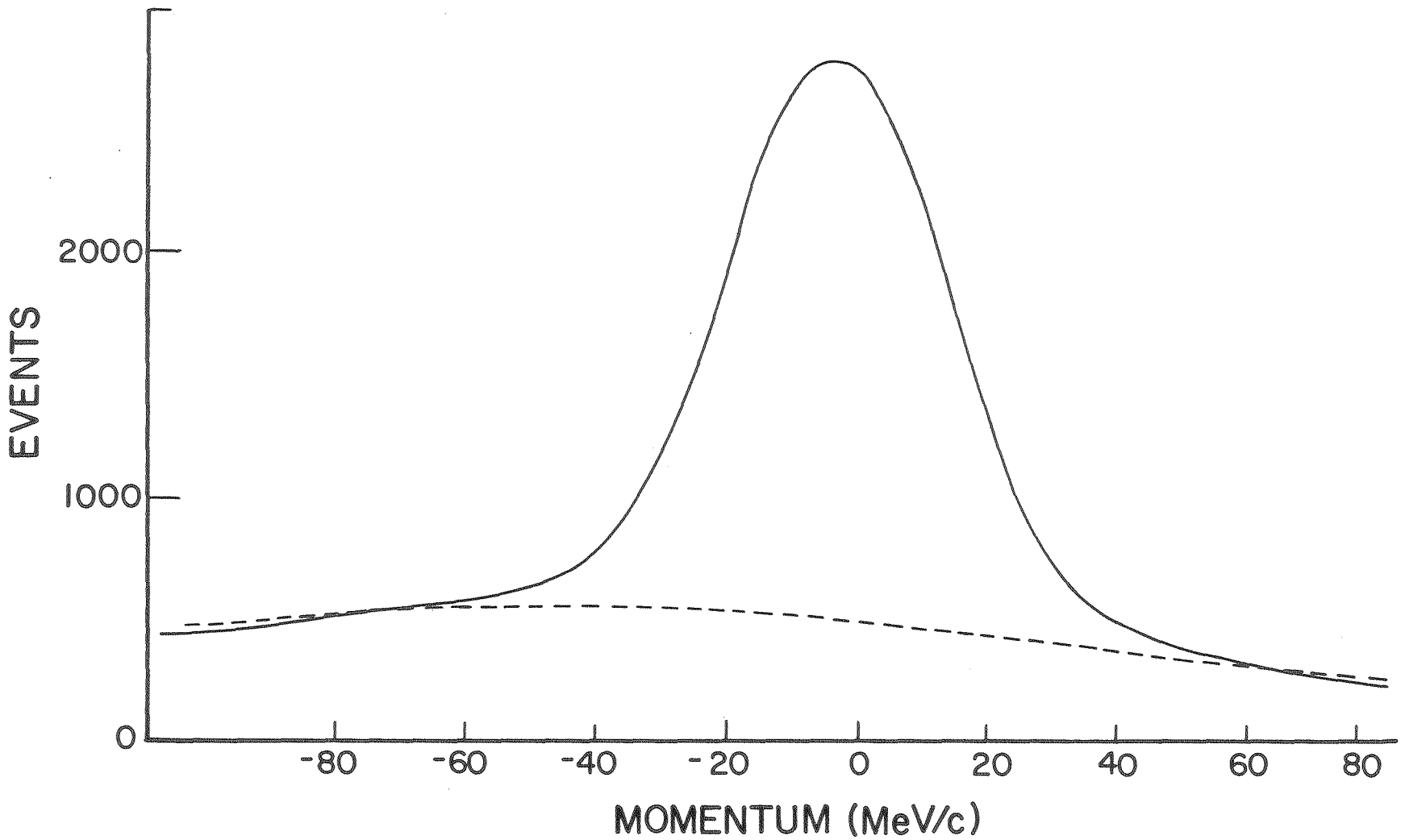

Fig. 2

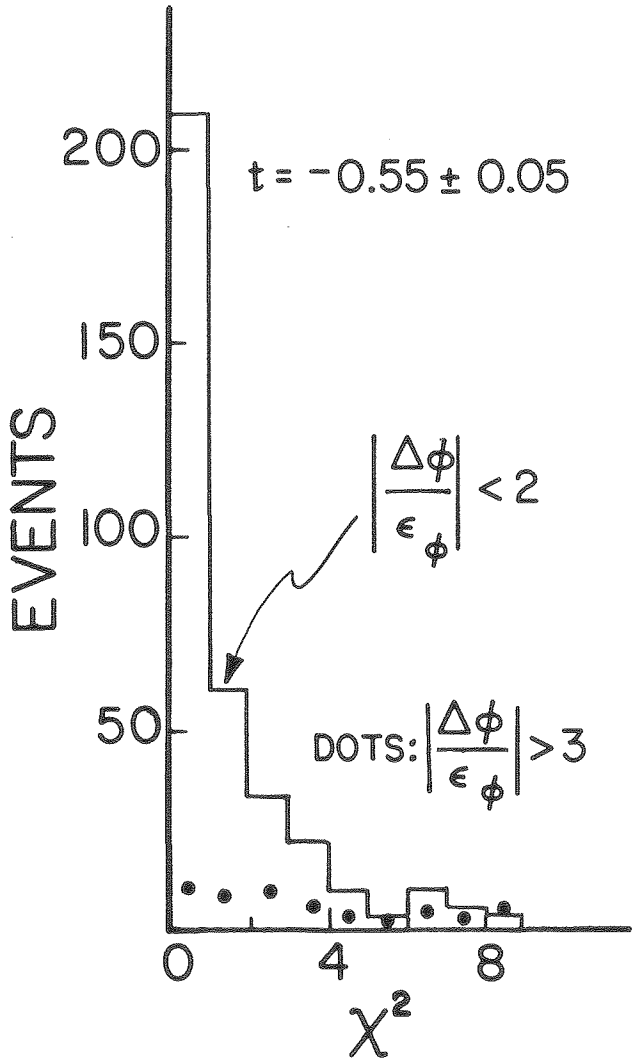
200
150
100
50
EVENTS
t = −0.55 ± 0.05
$\left|\frac{\Delta\phi}{\epsilon_\phi}\right| < 2$
DOTS: $\left|\frac{\Delta\phi}{\epsilon_\phi}\right| > 3$
0
4
8
χ^2

Fig. 3

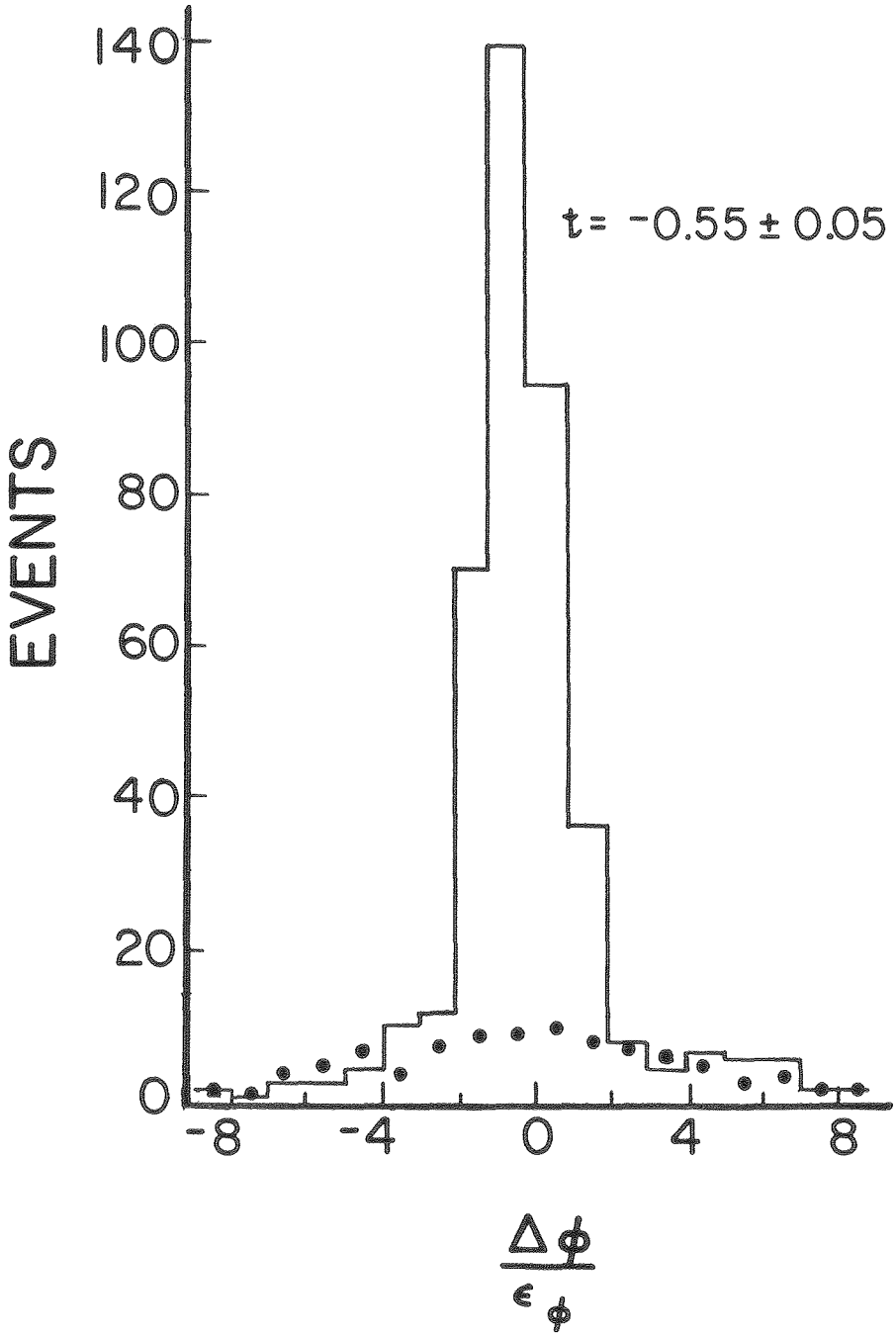

Fig. 4

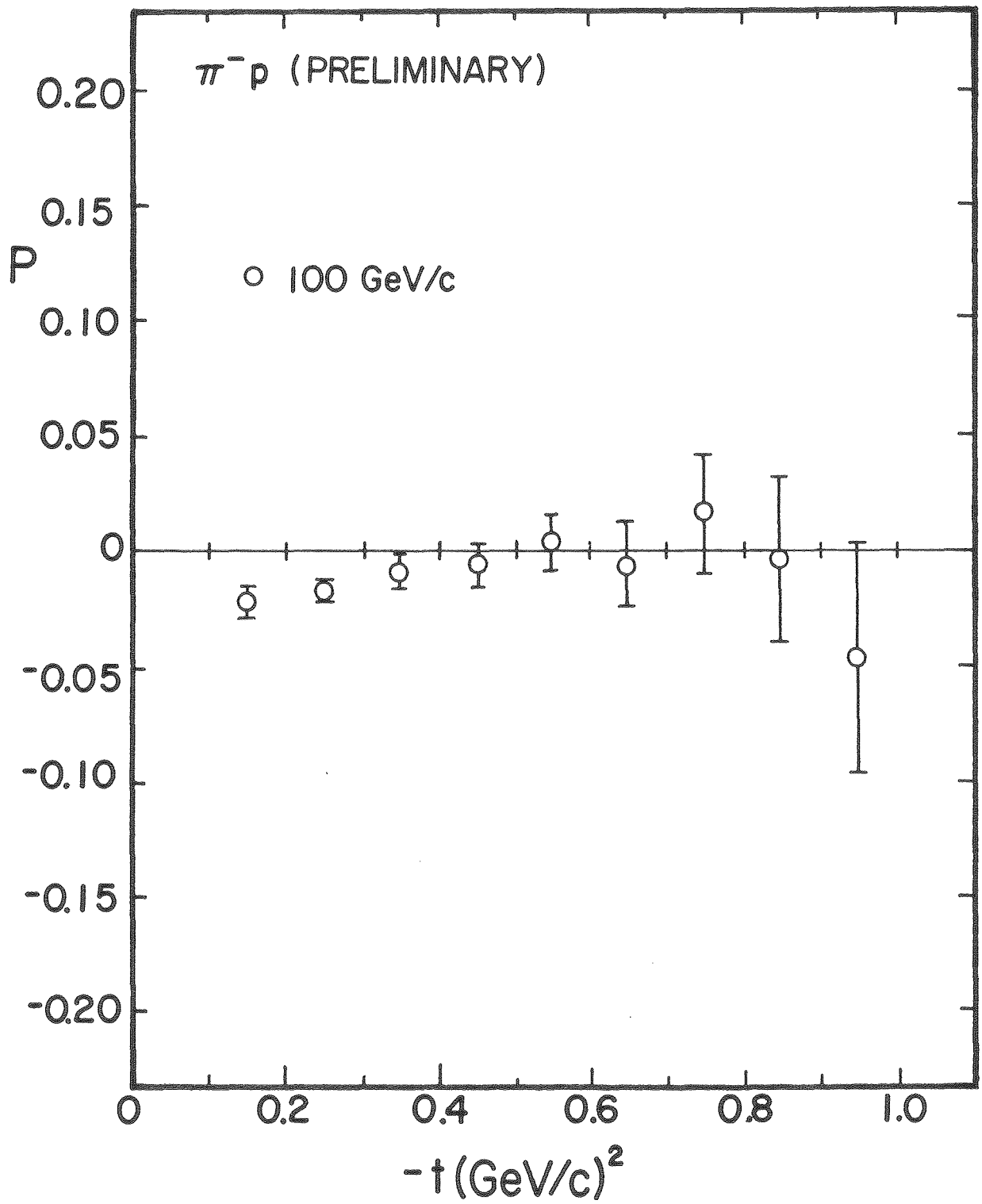
π⁻p (PRELIMINARY)
100 GeV/c
P
0.20
0.15
0.10
0.05
0
-0.05
-0.10
-0.15
-0.20
0
0.2
0.4
0.6
0.8
1.0
-t (GeV/c)²

Fig. 5

0 0 0 0 4 7 0 9 8 5 4

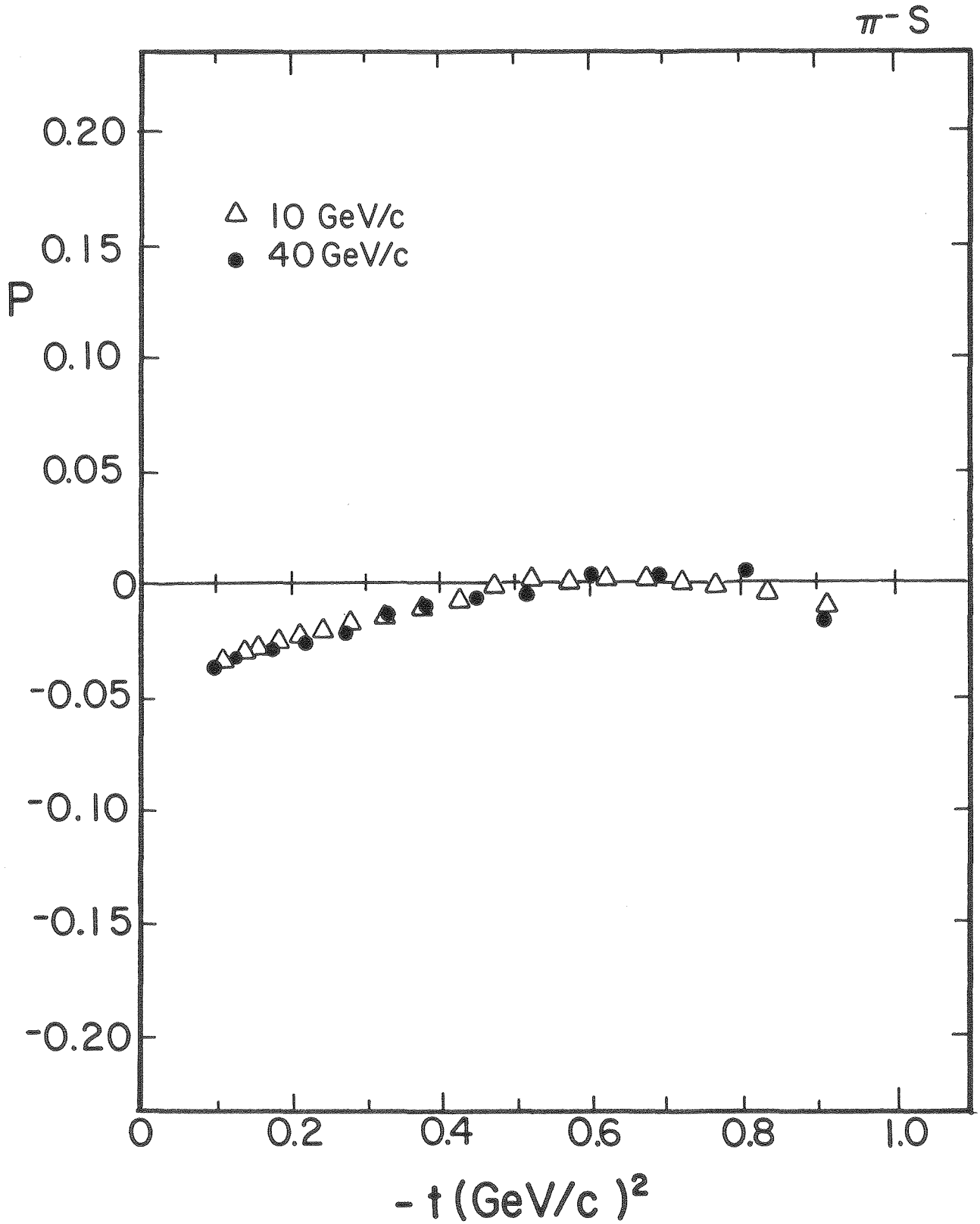

Fig. 6

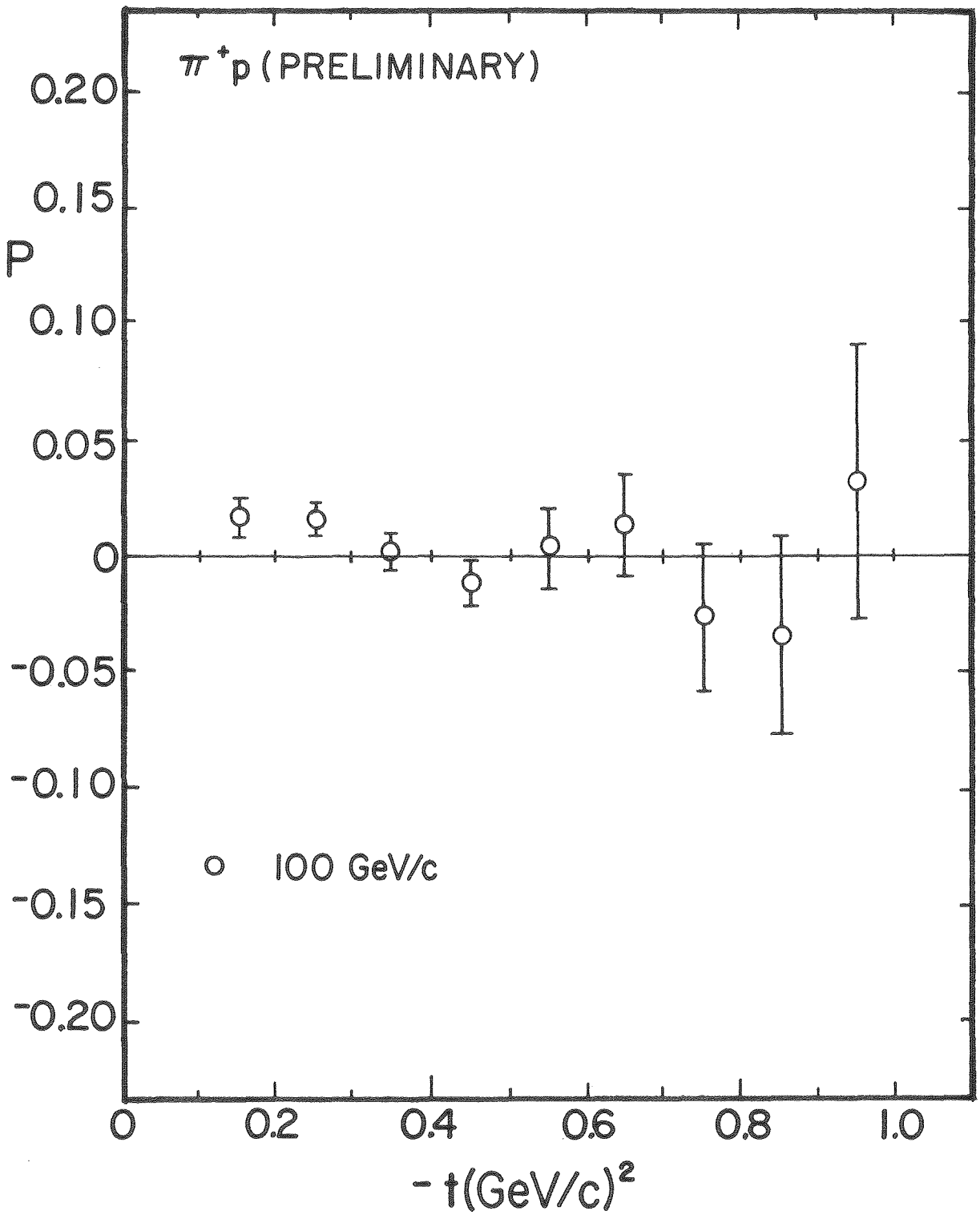
π^+p (PRELIMINARY)
P
0.20
0.15
0.10
0.05
0
-0.05
-0.10
-0.15
-0.20
100 GeV/c
0
0.2
0.4
0.6
0.8
1.0
$-t(GeV/c)^2$

Fig. 7

0 0 1 0 4 7 0 9 8 5 5

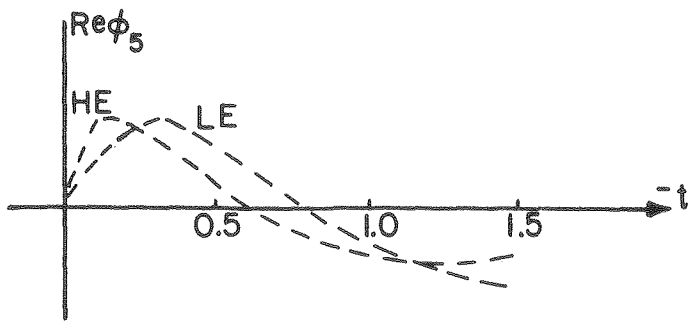

Fig. 8

This report was done with support from the United States Energy Research and Development Administration. Any conclusions or opinions expressed in this report represent solely those of the author(s) and not necessarily those of The Regents of the University of California, the Lawrence Berkeley Laboratory or the United States Energy Research and Development Administration.

0 0 0 0 4 5 0 2 2 9 4