UC-32
UC-95c+d

LBL-6331

c.1

Presented at the First International Conference on Energy Use Management, Tucson, AZ, October 24-28, 1977

RECEIVED
LAWRENCE
BERKELEY LABORATORY

JUN 14 1978

LIBRARY AND
DOCUMENTS SECTION

For Reference

Not to be taken from this room

Energy and Environment Division

CAL-ERDA, A New Computer Program For Building Energy Analysis

F. C. Winkelmann, M. Lokmanhekim, H. C. Mitchell, A. H. Rosenfeld, R. M. Graven, B. D. Hunn, and Z. Cumali

November 1977

Lawrence Berkeley Laboratory University of California/Berkeley

Prepared for the U.S. Department of Energy under Contract No. W-7405-ENG-48

LBL-6331
c.1

13

DISCLAIMER

This document was prepared as an account of work sponsored by the United States Government. While this document is believed to contain correct information, neither the United States Government nor any agency thereof, nor the Regents of the University of California, nor any of their employees, makes any warranty, express or implied, or assumes any legal responsibility for the accuracy, completeness, or usefulness of any information, apparatus, product, or process disclosed, or represents that its use would not infringe privately owned rights. Reference herein to any specific commercial product, process, or service by its trade name, trademark, manufacturer, or otherwise, does not necessarily constitute or imply its endorsement, recommendation, or favoring by the United States Government or any agency thereof, or the Regents of the University of California. The views and opinions of authors expressed herein do not necessarily state or reflect those of the United States Government or any agency thereof or the Regents of the University of California.

TYPE TITLE OF ARTICLE HERE ON PAGE 1

CAL-ERDA, A NEW COMPUTER PROGRAM FOR BUILDING ENERGY ANALYSIS*

>Quadruple space

F. C. Winkelmann, M. Lokmanhekim,
H. C. Mitchell and A. H. Rosenfeld
Lawrence Berkeley Laboratory,
University of California, Berkeley, CA 94720

R. M. Graven
Argonne National Laboratory,
Argonne, IL 60439

B. D. Hunn
Los Alamos Scientific Laboratory,
Los Alamos, NM 87545

Z. Cumali
Consultants Computation Bureau,
2930 Lakeshore Avenue,
Oakland, CA 94610

ace

pace

COMMENCE text of article

ABSTRACT

Cal-ERDA, a new public-domain computer program for building energy analysis, features ease of input and fast algorithms. Fast, flexible input is made possible by a simulation input language known as Building Design Language (BDL). A selection of pre-defined HVAC distribution systems and primary equipment is available to the user. The fundamentals of BDL are illustrated by discussion and examples. Calculations of hourly LOADS, SYSTEMS, PLANT, and ECONOMICS for a full year of weather data on multi-zoned buildings typically use less than fifty thousand words of core, require 2 to 4 CPU seconds per zone, and cost less than $1.00 per zone on the CDC 7600 computer at LBL.

*A joint project of Argonne National Laboratory, Lawrence Berkeley Laboratory, and Los Alamos Scientific Laboratory, in cooperation with Consultants Computation Bureau, and co-sponsored by the Energy Resources Conservation and Development Commission (ERCDC) of the State of California and the United States Department of Energy

I. INTRODUCTION

Computer analysis of building energy requirements has been a reality for little more than a decade, yet that short span of time has seen the genesis of a number of such programs in both the private sector and the public domain. The rate of activity in this field is indicated by the fact that even in these few years, Cal-ERDA is already a member of the third generation of such computer programs.

Cal-ERDA's predecessor in the public domain is NASA's Energy-Cost Analysis Program (NECAP). Although NECAP was a major step forward, the program has proven cumbersome to use and expensive to run. There has continued to be a need for a fast running program with the flexibility to perform complex parametic studies, yet easy-to-use for the novice, and which also produced output useful to the engineer/designer who needs to make design decisions. Cal-ERDA attempts to meet these needs. The techniques of calculating envelope loads used by NECAP are retained in Cal-ERDA. However, the airside and HVAC equipment simulations in Cal-ERDA are believed to be much enhanced. All of the algorithms were designed for speed, without compromising completeness.

A measure of Cal-ERDA's success in this direction is obtained by comparison with NECAP on the same building analysis

problem. The building modeled was a 12-story, 24-zone office building. Cal-ERDA needed less than half the number of input cards required by NECAP, ran more than three times as fast, and produced identical results. Typically for this size and complexity of building, Cal-ERDA requires 2.5 to 3.0 CPU seconds per zone, 50K (decimal) words of core, and costs less than $1.00 per zone on the CDC 7600 at LBL to run hourly Loads, Systems, Plant and Economics for a full year of weather data. This cost is based on $800 per real hour, plus cost for peripheral equipment, materials, etc.

Cal-ERDA has been designed to aid in the research and design of energy conservative buildings; the analysis of existing buildings for cost-effective retrofit; and the evaluation of new buildings for energy code compliance.

II. DESCRIPTION

Cal-ERDA utilizes four basic simulation programs (Loads, Systems, Plant, and Economics) for energy and cost computations, in addition to an input language processor (BDL) which allows an easy human interface. The user must (a) describe the building, the HVAC distribution systems and their controls, and the central plant equipment; (b) specify schedules for occupancy, room thermostats, lights, equipment, etc.; (c) specify building location, and choose an appropriate weather tape from a library of 75; (d) specify output desired. Cal-ERDA will: (a) compute the hourly envelope and space loads; (b) simulate the operation of HVAC air and/or hydronic distribution systems; (c) simulate the operation of primary heating, cooling, and (if used) electrical generation equipment; (d) compute first cost, operating cost, and life-cycle cost.

Parametric capabilities in BDL make it convenient to study alternatives for the building envelope, HVAC control and distribution systems, and central plant equipment in order to arrive at a cost-effective, energy efficient design.

The Loads calculations are based on ASHRAE algorithms [1]. "Response factors" are used to calculate transient one-dimensional heat conduction through exterior surfaces, accounting for the heat-transfer time delay generated by the combined thermal characteristics of the materials which make-up the exterior surface. "Weighting factors" are used to account for the time delay between instantaneous heat gain and its influence on the heating/cooling load (each source of heat gain has its characteristic weighting factor). The Loads program calculations are performed at a fixed space temperature selected by the user, a practice which reduces execution time by almost 50%.

The Systems program reads these fixed-temperature loads and calculates the space heat addition/extraction rate as well as the "actual" space temperature. This calculation takes into account thermostat setting and throttling ranges, HVAC equipment capacity, performance characteristics, operating schedules, and ventilation requirements. Thus the Systems program produces space heat addition/extraction rates and temperatures that would be experienced under normal operating conditions. These hourly-extraction rates are then used as the driving force for the airside calculation which produces hourly demands upon the primary HVAC equipment. The Systems program performs these calculations using algorithms which simulate a distribution system chosen by the user from a set of commonly-used preconnected systems. The program can also perform calculations to determine the appropriate equipment size for a given set of design conditions. (Future version of Cal-ERDA will allow the user to build up a system from a larger set of components.)

The Plant program simulates the primary energy conversion equipment that provides heating and cooling (and in some cases electrical energy), using the requirements of the fans, coils, humidifiers and other equipment as determined by Systems. The Plant program converts these thermal and electrical loads into energy requirements by simulating the plant operation, using the part-load characteristics and controls of the primary equipment selected by the user. This selection is made from a list ofcommon equipment, which also includes a number of preconnected solar energy systems.

The Economics program is used to determine the cost effectiveness of the various alternatives considered by Loads, Systems, and Plant, using the life-cycle costing techniques specified in ERDA 76/130.

The Cal-ERDA Library provides another convenience to the user. At this time the library contains weather files for 75 locations throughout the U.S., and thermal properties of materials (from which walls can be built up). Later libraries will

have response factors for a set of selected walls and roofs. (The user can also create his own library of walls and roofs).

The algorithms which make up the Cal-ERDA source code are discussed in the Cal-ERDA Program Manual [2].

Under development is a User-Report program through which a user will be able to select any named variables for output on an hourly basis.

III. BDL OVERVIEW

Cal-ERDA provides a significant contribution to building energy analysis by virtue of its input language. Each of the four basic programs (Loads, Systems, Plant and Economics) has a subset of this language designed to allow easy description of the information required for the simulation. These free-format languages are known collectively as the Building Design Language.

BDL is structured much like English, with words placed in a prescribed sequence into sentences, sentences blocked into paragraphs, paragraphs ordered into sections, and sections assembled into a program.

The basic element of BDL, analogous to an English word, is called a keyword. Keywords are used to establish values for needed input information. Thus in cards 12 and 13 of the sample run we see that the command BUILDING-LOCATION has received four user-assigned keyword values: LATITUDE, LONGITUDE, TIME-ZONE, and BUILDING-AZIMUTH. The user has given LATITUDE the value 42 degrees, etc.

The basic sentence of BDL is called a command. There are two sorts:

1) Un-named commands have the basic structure: Command, Keywords and Terminator (..).

2) Named commands permit a user-named prefix. They are structured: user-name, command, keywords, terminator.

In our example commands start in col. 17. User-names start in col. 1, followed by an = sign and then the command. To distinguish user-names from keywords the user-names generally incorporate a number, e.g., WALL-1, ROOF-1, etc.

As an example of an un-named command we have already cited BUILDING-LOCATION on card 12. This command will search up to the first terminator (..) for its expected keywords.

An example of a named command is CONSTRUCTION (cards 23 through 27). Each construction is given a user-name, e.g., WALL-1, ROOF-1, ... which is used in a subsequent command (as a value of a keyword) to define the properties of specific walls, roofs, etc. Thus in card 153 an interior ceiling (or wall) is given a U-value of 0.27 by the (keyword = Value) pair (CONSTRUCTION = CLNG-1).

Commands are grouped together, like sentences in a paragraph, and these groups are presented in an ordered fashion such that the BDL processor can interpret the command it is reading, based on a set of predefined values and information "acquired" from previous commands. Thus a user, in most cases, cannot use as an input value for a keyword any quantity that has not previously been defined implicitly (by a code-word) or explicitly (by previous commands). For example, before the user can attach an operating schedule to a piece of equipment, such a schedule must be defined (by a previously occurring SCHEDULE command) and given a user-name for reference purposes.

Finally, these groups of commands, like the sections of this paper, are arranged such that the information is presented to the BDL processor in correct order for transfer of information to each of the simulation programs. The Loads section of BDL contains all information (geometry, lighting, construction, etc.) needed by the Loads program for the hourly simulation. In a similar manner the Systems, Plant, and Economics sections of the BDL input contain groups of commands known to the processor to contain information necessary for the respective simulations to take place.

A complete discussion of BDL is not intended here. That is the province of the Cal-ERDA Users Manual [3]. However, some of the highlights will be discussed to help the reader through the example. Each section of the example (Loads, Systems, etc.) starts with an echo print of BDL input cards. Comments sandwiched between /* and */ are ignored by BDL.

BDL input coding starts with the project title and a group of basic commands known as program control commands. Some of these are self-evident, but the BUILDING-LOCATION command needs some explanation. First the values for the keywords LATITUDE and

LONGITUDE fix geographically the origin of the building coordinate system. Next the value of the BUILDING-AZIMUTH keyword establishes building orientation. This value is the angle (measured positive clockwise or negative counter-clockwise) from true north to the Y-axis of the building coordinate system. See Fig. 1.

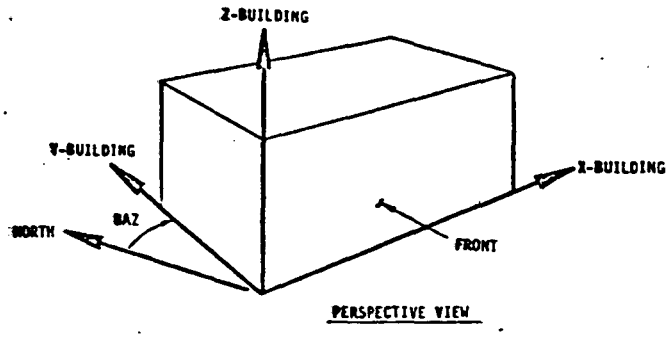

Fig. 1

The next block of instructions is to "define user variables." These are not required instructions, but they can greatly enhance ease and flexibility of performing parametric studies. Here we have defined WOO-1 to mean WA01-2, a predefined wall in the user library. If the exterior wall is established using the DEFINE command, the performance of a building constructed from a different kind of wall can be easily observed just be replacing the DEFINE instruction for that wall and re-running the program. The same applies to any other part of the building envelope such as roofs, doors, windows, etc.

Next the "construction and glass types" are specified for the various elements of the building envelope. Response factors for exterior "delayed" surfaces may be computed directly, using the MATERIAL and LAYERS commands, or may be called (as in the example) from the response factor library, (not yet released).

The next block of instructions addresses the "schedules" for occupancy, lights, equipment, and infiltration. The DAY-SCHEDULE command is used to specify the fraction of maximum occupancy, lighting, etc. that will exist for each of the 24 hours of the day. The WEEK-SCHEDULE states which DAY-SCHEDULE (weekday, weekend, etc.) will apply to each day of the week, plus holidays. Finally, the SCHEDULE command states which WEEK-SCHEDULE will apply to each week of the year. Future development will allow the library to contain pre-defined typical schedules. Then it will only be necessary to reference the library name for the desired schedule.

The SET-DEFAULT command is not required but is convenient; it reassigns default values for user-selected keywords. Once this is done, those keywords can be ignored in the coding, and they will automatically assume the SET-DEFAULT values. These values may be selectively overridden, where desired, just by assigning a value to the keyword (within the command definition), after which the SET-DEFAULT value comes back into play.

The "general space definitions" section contains the definition of two sets of SPACE-CONDITIONS identified by the user names PLENUM and SPACE-1. The "subcommand word " SPACE-CONDITIONS is used to define a set of keyword/value relationships that can be applied to more than one space yet to be defined. The PLENUM space conditions, as the name implies, will be used for spaces that function as plenums in our building, and thus do not need values for many of the keywords designed for use in describing conditioned or occupied spaces. SPACE-1 can then be seen to specify many quantities which will remain constant throughout the conditioned spaces. It should be noted here that the keywords not specified in the definition of PLENUM and SPACE-1 will take on the "default" values associated with those keywords.

Next comes the main course in BDL, and that is the space definitions, called "specific space details." A space is a volume of the building characterized by unique geometry, orientation, and loads. As seen by the HVAC engineer, it is a Thermal Zone. All of the instructions prior to SPACE have been made solely to provide data for the SPACE loads calculations. SPACE is the fundamental building block of the BDL input coding for the Loads program.

There is a hierarchy of command words having to do with SPACE. First comes the space, then the bounding surfaces of the space (exterior and/or interior walls), then the apertures in the walls (doors and windows), and then the attachments to the apertures (overhangs and fins).

There is also a hierarchy of coordinate systems. First is the building coordinate system, then the space coordinate system, then the surface coordinate system, and finally the window (door) coordinate

system. Each has its origin fixed with respect to its predecessor. See Fig. 2.

The keywords SURFACE-AZIMUTH (or AZIMUTH) and TILT are very much in evidence in space definition, and it is important that they are properly handled. SURFACE-AZIMUTH is the angle between the Y-axis of the space coordinate system and the outward normal of the exterior surface. The origin of that exterior is at the lower left corner of the surface as viewed from the outside (i.e., the viewer looking into the outward normal). See Fig. 3. The origin of each surface is indicated by the appropriate vertex number (V1, V2, etc.).

TILT is the angle between the plumb vertical and the outward normal of the exterior surface. A flat roof has TILT = 0. A 45° pitched roof has TILT = 45. A vertical wall has TILT = 90. An exposed floor would have TILT = 180. See Fig. 4.

The HVAC system used in this example is a variable air volume system with terminal reheat. Note the similarity of the input language to the LOADS input previously discussed. The schedules shown in the example (Systems input) are for the heating/cooling availability and the thermostat settings throughout the year.

The dominant command words for the Systems program are ZONE and SYSTEM. Each has a number of sub-command words preceding it.

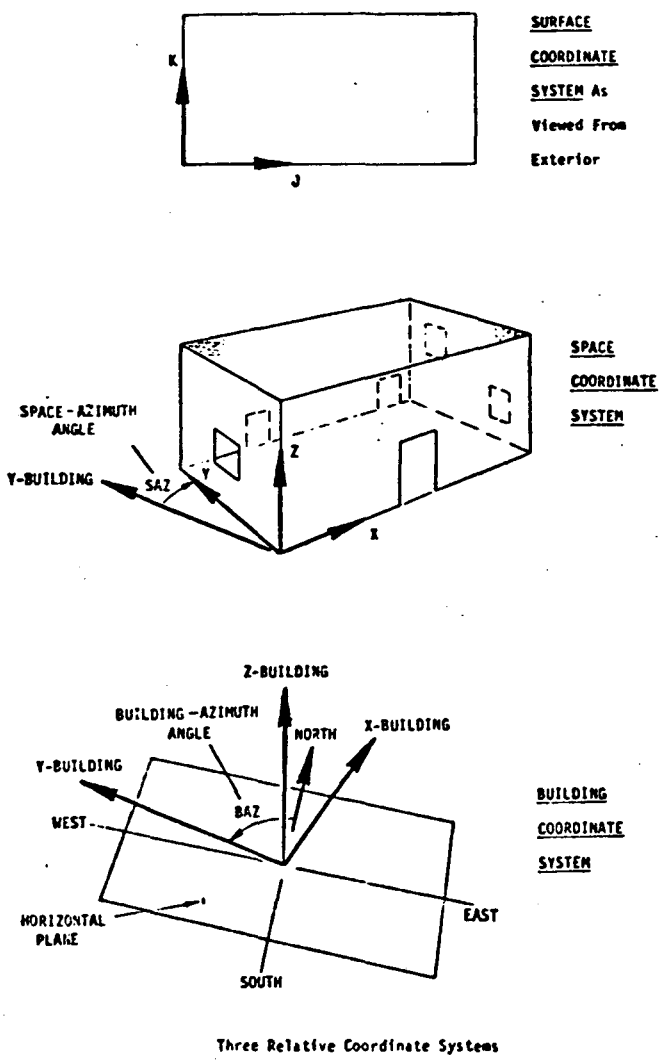

Three Relative Coordinate Systems

Fig. 2

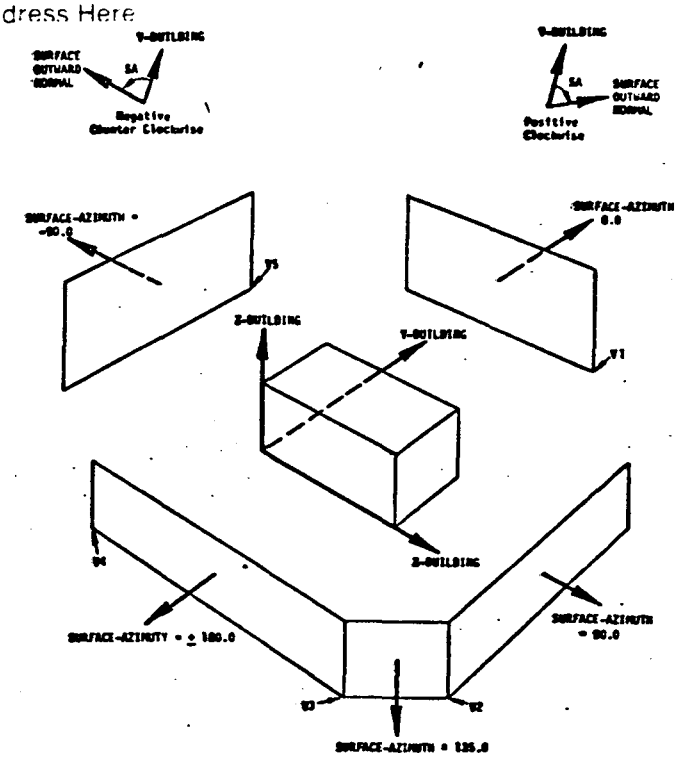

Fig. 3

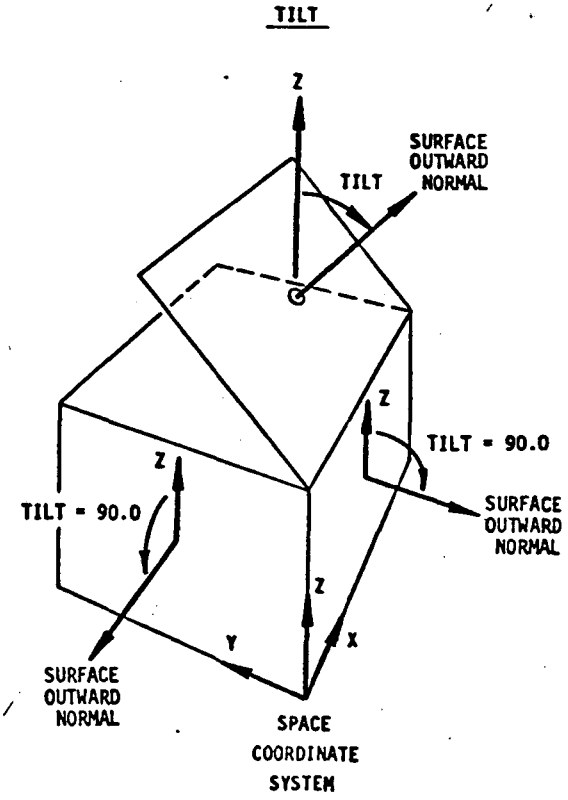

Fig. 4

No text below th
ction = 6" x 9" Text

These sub-command words function in a manner similar to the SPACE-CONDITIONS sub-command word in the Loads section.

Unlike Loads, the Systems program has a number of mandatory keywords. Failure to specify these keywords will result in an ERROR message. See Chapter IV, Cal-ERDA Users Manual [3].

Note that the user-names for the ZONES in the Systems section are identical to the user-names of their SPACE counterparts under LOADS. This links the output of the Loads program for each space to the Systems program input for each thermal zone.

The Systems program has the capability of calculating the performance of a number of alternative system arrangements, all in one pass through the program. The PLANT-ASSIGNMENT command word is used to assign the demands of various arrangements of alternative systems when this sort of parametric study is desired. This example calls for only one system, so the use of PLANT-ASSIGNMENT in this case is just for illustration.

One of the output report options for the Systems program is titled "System Design Parameters." Plant sizing information is provided at the bottom of the report. In this example run, the space peaks computed by the Loads program were used by the Systems program in order to size zone terminal units and central fans. The peak coil loads computed by the Systems program could then have been used by the Plant program to size the boiler, chiller, and cooling tower. We choose, in this example however, to personally specify the size of the primary equipment. The equipment chosen was a steam boiler, a double bundle chiller, and a cooling tower.

At the present time in Cal-ERDA the economics analysis is split; life cycle costing of plant equipment is performed by the Plant program, while the trade-off analysis of various energy conserving options is done by the Economics program. The Life Cycle Cost Summary output report from Plant provides the cost baseline used by the Economics program.

The energy conserving options used to illustrate the Economics program were: additional insulation in the roof and double-glazing of all exterior glass. The first block of instructions to the Economics program consists of basic economics data such as discount rate, inflation rate, etc. The next entry is plant cost data taken from the Plant Life Cycle Cost Summary report. Then the cost of the options is entered. The Economics output report shown in the example provides a life-cycle cost comparison, including such items as savings-to-investment ratio, fuel savings, and payback period.

ACKNOWLEDGMENTS

The Cal-ERDA computer program described above is the result of the participation and cooperation of many individuals from national laboratories, private companies, and state and federal agencies. Special thanks are due Gerald S. Leighton of the Office of Conservation and Solar Applications, Department of Energy, for his support and leadership, and to the staff of the California Energy Resources Conservation and Development Commission.

REFERENCES

[1] "Procedure for Determining Heating and Cooling Loads for Computerized Energy Calculations," ASHRAE 1975.

[2] B. D. Hunn et al., "Cal-ERDA Program Manual," Los Alamos Scientific Laboratory.

[3] R. M. Graven and P. R. Hirsch, "Cal-ERDA Users Manual," Argonne National Laboratory.

No text below this line

LDL PROCESSOR INPUT DATA

```
                1         2         3         4         5         6         7         8
       12345678901234567890123456789012345678901234567890123456789012345678901234567890

*   1 *  /* INPUT LOADS */
*   2 *
*   3 *  TITLE   EXAMPLE BUILDING 3                                                    ..
*   4 *  TITLE   USER NAME                                                              ..
*   5 *
*   6 *                          /*PROGRAM CONTROL INSTRUCTIONS*/                      ..
*   7 *
*   8 *                  RUN-PERIOD          JAN  1 1974  THRU  DEC 31 1974            ..
*   9 *                  DIAGNOSTIC          WARNING                                   ..
*  10 *                  LIST                ABORT ERROR                               ..
*  11 *                  LOADS-REPORT        L02                                       ..
*  12 *                  BUILDING-LOCATION   LATITUDE = 42.0 LONGITUDE = 88.0
*  13 *                                      TIME-ZONE=6.0  BUILDING-AZIMUTH=30.0      ..
*  14 *
*  15 *                          /*DEFINE USER VARIABLES*/
*  16 *
*  17 *                  DEFINE              WOO-1=WA01-2                              ..
*  18 *                  DEFINE              ROC-1=SF1-RF                              ..
*  19 *
*  20 *
*  21 *                          /*CONSTRUCTION AND GLASS-TYPES*/
*  22 *
*  23 *  WALL-1        =CONSTRUCTION       WALL-TYPE=WOO-1                           ..
*  24 *  ROOF-1        =CONSTRUCTION       ROOF-TYPE=ROO-1                           ..
*  25 *  CLNG-1        =CONSTRUCTION       U = 0.27                /*CEILING*/       ..
*  26 *  SB-U          =CONSTRUCTION       U = 2.0                 /*PARTITION*/     ..
*  27 *  FLOOR-1       =CONSTRUCTION       U = 0.3                                   ..
*  28 *  W-1           =GLASS-TYPE         SHADING-COEFF=0.86
*  29 *                                    PANES=2                                   ..
*  30 *  FRNTDR        =GLASS-TYPE         GLASS-TYPE-CODE = 1
*  31 *                                    GLASS-INFILTRATION = 18                   ..
*  32 *  BCKDR         =GLASS-TYPE         GLASS-TYPE-CODE = 1
*  33 *                                    GLASS-INFILTRATION = 18                   ..
*  34 *
*  35 *                          /*SCHEDULES*/                                       ..
*  36 *
*  37 *  OC-1          =DAY-SCHEDULE       (1,8) 0.0
*  38 *                                    (9,11) 1.0
*  39 *                                    (12,14) 0.8,0.4,0.8
*  40 *                                    (15,18) 1.0
*  41 *                                    (19,21) 0.5,0.1,0.1
*  42 *                                    (22,24) 0.0                               ..
*  43 *
*  44 *  OC-2          =DAY-SCHEDULE       (1,24) 0.0                                ..
*  45 *
*  46 *  OC-WEEK       =WEEK-SCHEDULE      (SUN)      OC-2
*  47 *                                    (MON,FRI) OC-1
*  48 *                                    (SAT,HOL) OC-2                            ..
*  49 *
*  50 *  OCCUPY-1      =SCHEDULE           THRU DEC 31 OC-WEEK                       ..
*  51 *
*  52 *  LT-1          =DAY-SCHEDULE       (1,8) 0.05
*  53 *                                    (9,14) 0.9,0.95,1.0,0.95,0.8,0.9
*  54 *                                    (15,18) 1.0
*  55 *                                    (19,21) 0.6,0.2,0.2
*  56 *                                    (22,24) 0.05                              ..
*  57 *
*  58 *  LT-2          =DAY-SCHEDULE       (1,24) 0.05                               ..
*  59 *
*  60 *  LT-WEEK       =WEEK-SCHEDULE      (SUN)      LT-2
*  61 *                                    (MON,FRI) LT-1
*  62 *                                    (SAT,HOL) LT-2                            ..
*  63 *
*  64 *  LIGHTS-1      =SCHEDULE           THRU DEC 31 LT-WEEK                       ..
*  65 *
*  66 *  EQ-1          =DAY-SCHEDULE       (1,8) 0.02
*  67 *                                    (9,14) 0.4,0.9,0.9,0.9,0.9,0.9
*  68 *                                    (15,20) 0.8,0.7,0.5,0.5,0.3,0.3
*  69 *                                    (21,24) 0.02                              ..
*  70 *
*  71 *  EQ-2          =DAY-SCHEDULE       (1,24) 0.2                                ..
*  72 *
*  73 *  EQ-WEEK       =WEEK-SCHEDULE      (SUN)      EQ-2
*  74 *                                    (MON,FRI) EQ-1
*  75 *                                    (SAT,HOL) EQ-2                            ..
*  76 *
*  77 *  EQUIP-1       =SCHEDULE           THRU DEC 31 EQ-WEEK                       ..
*  78 *
```

```
*  79 *  INF-1          =DAY-SCHEDULE        (1,8) 1.0
*  80 *                                       (9,18) 0.0
*  81 *                                       (19,24) 1.0                          ..
*  82 *
*  83 *  INF-2          =DAY-SCHEDULE        (1,24) 1.0                           ..
*  84 *
*  85 *  INF-WEEK       =SCHEDULE-BLOCK      (SUN)       INF-2
*  86 *                                       (MON,FRI)   INF-1
*  87 *                                       (SAT,HOL)   INF-2                    ..
*  88 *
*  89 *  INFIL-SCH      =SCHEDULE            THRU DEC 31 INF-WEEK                 ..
*  90 *
*  91 *                          /*SET-DEFAULT VALUES*/
*  92 *
*  93 *                   SET-DEFAULT        FLOOR-WEIGHT = 70.0
*  94 *                                       GLASS-HEIGHT = 4.0
*  95 *                                       GLASS-WIDTH = 5.0
*  96 *                                       GLASS-TYPE = W-1                     ..
*  97 *
*  98 *                          /*GENERAL SPACE DEFINITIONS*/
*  99 *
* 100 *  PLENUM         =SPACE-CONDITIONS    FLOOR-WEIGHT = 5      TEMP = 70      ..
* 101 *
* 102 *  SPACE-1        =SPACE-CONDITIONS    FLOOR-WEIGHT          =70
* 103 *                                       TEMP                  =70
* 104 *                                       PEOPLE-SCHEDULE       =OCCUPY-1
* 105 *                                       NUMBER-OF-PEOPLE      =50
* 106 *                                       PEOPLE-ACTIVITY       =400.0
* 107 *                                       LIGHTING-SCHEDULE     =LIGHTS-1
* 108 *                                       LIGHTING-TYPE         =2
* 109 *                                       LIGHT-TO-SPACE        =80
* 110 *                                       LIGHTING-W/SQFT       =3
* 111 *                                       EQUIPMENT-SCHEDULE    =EQUIP-1
* 112 *                                       EQUIPMENT-W/SQFT      =1
* 113 *                                       INF-METHOD            =2
* 114 *                                       NEUTRAL-ZONE-HEIGHT   =6
* 115 *                                       INF-SCHEDULE          =INFIL-SCH     ..
* 116 *
* 117 *                          /*SPECIFIC SPACE DETAILS*/
* 118 *
* 119 *  PLENUM-1       =SPACE               SPACE-CONDITIONS=PLENUM
* 120 *                                       VOLUME=10000          SPACE-HEIGHT=2 ..
* 121 *
* 122 *      WALL-1PF   =EXTERIOR-WALL       HEIGHT = 2            WIDTH = 100
* 123 *                                       AZIMUTH = 180
* 124 *                                       CONSTRUCTION = WALL-1                ..
* 125 *
* 126 *      WALL-1PR   =EXTERIOR-WALL       HEIGHT = 2            WIDTH =  50
* 127 *                                       AZIMUTH =  90
* 128 *                                       CONSTRUCTION = WALL-1                ..
* 129 *
* 130 *      WALL-1PB   =EXTERIOR-WALL       HEIGHT = 2            WIDTH = 100
* 131 *                                       AZIMUTH =   0
* 132 *                                       CONSTRUCTION = WALL-1                ..
* 133 *
* 134 *      WALL-1PL   =EXTERIOR-WALL       HEIGHT = 2            WIDTH =  50
* 135 *                                       AZIMUTH = 270
* 136 *                                       CONSTRUCTION = WALL-1                ..
* 137 *
* 138 *      TOP-1      =ROOF                LENGTH = 100          WIDTH = 50
* 139 *                                       X=0   Y=0   Z=10      AZIMUTH = 180
* 140 *                                       TILT=0                GND-REFLECTANCE=0
* 141 *                                       CONSTRUCTION = ROOF-1                ..
* 142 *
* 143 *  SPACE1-1       =SPACE               SPACE-CONDITIONS     =SPACE-1
* 144 *                                       AREA =   1056         VOLUME = 8448
* 145 *                                       NUMBER-OF-PEOPLE   =  10.56          ..
* 146 *
* 147 *      FRONT-1    =EXTERIOR-WALL       HEIGHT = 8            WIDTH = 100
* 148 *                                       X=0   Y=0   Z=0       AZIMUTH = 180
* 149 *                                       CONSTRUCTION = WALL-1                ..
* 150 *        WF-1     =WINDOW              GLASS-WIDTH = 45                     ..
* 151 *        DF-1     =WINDOW              GLASS-WIDTH = 4       GLASS-HEIGHT = 8
* 152 *                                       MULTIPLIER = 2        GLASS-TYPE = FRNTDR ..
* 153 *      C1-1       =INTERIOR-WALL       AREA = 1056           NEXT-TO  PLENUM-1
* 154 *                                       CONSTRUCTION = CLNG-1                ..
* 155 *      F1-1       =UNDERGROUND-FLOOR   AREA = 1056
* 156 *                                       CONSTRUCTION = FLOOR-1               ..
* 157 *      SB12       =INTERIOR-WALL       AREA 135.76           NEXT-TO  SPACE2-1
* 158 *                                       CONSTRUCTION = SB-U                  ..
* 159 *      SB14       =INTERIOR-WALL       LIKE SB12             NEXT-TO  SPACE4-1 ..
* 160 *      SB15       =INTERIOR-WALL       AREA 608              NEXT-TO  SPACE5-1
* 161 *                                       CONSTRUCTION = SB-U                  ..
```

```
* 162 *
* 163 *  SPACE2-1        =SPACE                SPACE-CONDITIONS      =SPACE-1
* 164 *                                        AREA  =    456         VOLUME = 3648
* 165 *                                        NUMBER-OF-PEOPLE    =  4.56                    ..
* 166 *      RIGHT-1     =EXTERIOR-WALL        HEIGHT = 8             WIDTH =  50
* 167 *                                        X=100  Y=0   Z=0       AZIMUTH =  90
* 168 *                                        CONSTRUCTION = WALL-1                             ..
* 169 *        WR-1      =WINDOW               GLASS-WIDTH = 25                                  ..
* 170 *      C2-1        =INTERIOR-WALL        AREA =  456            NEXT-TO  PLENUM-1
* 171 *                                        CONSTRUCTION = CLNG-1                             ..
* 172 *      F2-1        =UNDERGROUND-FLOOR    AREA =  456
* 173 *                                        CONSTRUCTION = FLCOR-1                            ..
* 174 *      SB23        =INTERIOR-WALL        AREA 135.76            NEXT-TO  SPACE3-1
* 175 *                                        CONSTRUCTION = SB-U                               ..
* 176 *      SB25        =INTERIOR-WALL        AREA 208               NEXT-TO  SPACE5-1
* 177 *                                        CONSTRUCTION = SB-U                               ..
* 178 *
* 179 *  SPACE3-1        =SPACE                SPACE-CONDITIONS     =SPACE-1
* 180 *                                        AREA  =   1056         VOLUME = 8448
* 181 *                                        NUMBER-OF-PEOPLE    =  10.56                   ..
* 182 *      BACK-1      =EXTERIOR-WALL        HEIGHT = 8             WIDTH = 100
* 183 *                                        X=100  Y=50  Z=0       AZIMUTH =   0
* 184 *                                        CONSTRUCTION = WALL-1                             ..
* 185 *        WB-1      =WINDOW               GLASS-WIDTH = 45                                  ..
* 186 *         DB-1     =WINDOW               GLASS-WIDTH = 3.6      GLASS-HEIGHT = 7
* 187 *                                        GLASS-TYPE=BCKOR
* 188 *                                        MULTIPLIER = 2                                    ..
* 189 *      C3-1        =INTERIOR-WALL        AREA = 1056            NEXT-TO  PLENUM-1
* 190 *                                        CONSTRUCTION = CLNG-1                             ..
* 191 *      F3-1        =UNDERGROUND-FLCOR    AREA = 1056
* 192 *                                        CONSTRUCTION = FLCOR-1                            ..
* 193 *      SB34        =INTERIOR-WALL        AREA 135.8             NEXT-TO  SPACE4-1
* 194 *                                        CONSTRUCTION = SB-U                               ..
* 195 *      SB35        =INTERIOR-WALL        AREA 608               NEXT-TO  SPACE5-1
* 196 *                                        CONSTRUCTION = SB-U                               ..
* 197 *
* 198 *  SPACE4-1        =SPACE                SPACE-CONDITIONS      =SPACE-1
* 199 *                                        AREA  =    456         VOLUME = 3648
* 200 *                                        NUMBER-OF-PEOPLE    =  4.56                    ..
* 201 *      LEFT-1      =EXTERIOR-WALL        HEIGHT = 8             WIDTH =  50
* 202 *                                         X=0   Y=50  Z=0       AZIMUTH = 270
* 203 *                                        CONSTRUCTION = WALL-1                             ..
* 204 *        WL-1      =WINDOW               GLASS-WIDTH = 25                                  ..
* 205 *      C4-1        =INTERIOR-WALL        AREA =  456            NEXT-TO  PLENUM-1
* 206 *                                        CONSTRUCTION = CLNG-1                             ..
* 207 *      F4-1        =UNDERGROUND-FLOOR    AREA =  456
* 208 *                                        CONSTRUCTION = FLOOR-1                            ..
* 209 *      SB45        =INTERIOR-WALL        AREA 208               NEXT-TO  SPACE5-1
* 210 *                                        CONSTRUCTION = SB-U                               ..
* 211 *
* 212 *  SPACE5-1        =SPACE                SPACE-CONDITIONS      =SPACE-1
* 213 *                                        AREA  =   1976         VOLUME =15808
* 214 *                                        NUMBER-OF-PEOPLE    =  19.76                   ..
* 215 *     C5-1         =INTERIOR-WALL       AREA = 1976            NEXT-TO  PLENUM-1
* 216 *                                        CONSTRUCTION = CLNG-1                             ..
* 217 *      F5-1        =UNDERGROUND-FLOOR    AREA = 1976
* 218 *                                        CONSTRUCTION = FLOOR-1                            ..
* 219 *
* 220 *  END /*LOADS*/                                                                           ..
```

REPORT- L01 SPACE PEAK LOADS SUMMARY

SPACE NAME	MULTIPLIER	COOLING LOAD (KBTU/HR)	TIME OF PEAK	DRY-BULB	WET-BULB	HEATING LOAD (KBTU/HR)	TIME OF PEAK	DRY-BULB	WET-BULB
PLENUM-1	1.	20.757	JUL 7 3 PM	90F	72F	-20.576	JAN 12 9 AM	-8F	-8F
SPACE1-1	1.	33.416	SEP 26 5 PM	81F	61F	-32.275	MAR 25 8 AM	14F	12F
SPACE2-1	1.	11.815	AUG 19 1 PM	87F	70F	-7.637	FEB 4 7 AM	6F	5F
SPACE3-1	1.	20.583	JUL 9 5 PM	97F	73F	-33.057	APR 8 7 AM	31F	28F
SPACE4-1	1.	9.514	JUL 9 5 PM	97F	73F	-7.678	FEB 4 7 AM	6F	5F
SPACE5-1	1.	18.226	AUG 30 3 PM	82F	64F	-18.041	FEB 25 8 AM	10F	9F
SUM		114.311				-119.264			
BUILDING PEAK		96.385	AUG 19 5 PM	90F	71F	-101.819	JAN 7 6 AM	1F	1F

REPORT- L02 SPACE PEAK LOAD COMPONENTS SPACE SPACE5-1
PROJECT- EXAMPLE BUILDING 3 USER NAME CAL-ERDA 1.3 12 NOV

REPORT- L03 BUILDING PEAK LOAD COMPONENTS

*** BUILDING ***

FLOOR AREA 5000 SQFT 464 SQMT
VOLUME 50000 CUFT 1416 CUMT

	COOLING LOAD		HEATING LOAD	
TIME	AUG 19 5 PM		JAN 7 6 AM	
DRY-BULB TEMP	90F	32C	1F	-17C
WET-BULB TEMP	71F	22C	1F	-17C

	SENSIBLE (KBTU/H)	SENSIBLE (MJ/H)	LATENT (KBTU/H)	LATENT (MJ/H)	SENSIBLE (KBTU/H)	SENSIBLE (MJ/H)
WALLS	4.648	4.90	0.000	0.00	-10.376	-10.95
CEILINGS	8.810	9.30	0.000	0.00	-15.632	-16.49
GLASS CONDUCTION	5.800	6.12	0.000	0.00	-22.447	-23.68
GLASS SOLAR	32.286	34.06	0.000	0.00	1.712	1.81
INTERNAL SURFACES	0.000	0.00	0.000	0.00	0.000	0.00
UNDERGROUND SURFACES	-10.500	-11.08	0.000	0.00	-43.500	-45.89
OCCUPANTS TO SPACE	13.159	13.88	4.638	4.89	.001	.00
LIGHT TO SPACE	28.672	30.25	0.000	0.00	1.641	1.73
EQUIPMENT TO SPACE	8.872	9.36	0.000	0.00	.830	.88
PROCESS TO SPACE	0.000	0.00	0.000	0.00	0.000	0.00
INFILTRATION	0.000	0.00	0.000	0.00	-14.048	-14.82
TOTAL	91.747	96.80	4.638	4.89	-101.819	-107.42
TOTAL LOAD	96.385 KBTU/H		101.69 MJ/H		-101.819 KBTU/H	-107.42 MJ/H
TOTAL LOAD / AREA	19.28 BTUH/SQFT		.21916 MJ/H/SQMT		20.36 BTUH/SQFT	.23152 MJ/H/SQMT

NOTE 1)THE ABOVE LOADS EXCLUDE OUTSIDE VENTILATION AIR LOADS
2)TIMES GIVEN IN STANDARD TIME FOR THE LOCATION IN CONSIDERATION

No text below this line

S D L P R O C E S S O R I N P U T D A T A

```
                 1         2         3         4         5         6         7         8
        12345678901234567890123456789012345678901234567890123456789012345678901234567890

*   1 *  /* INPUT SYSTEMS */
*   2 *
*   3 *  SYSTEMS-REPORT       DETAIL-LEVEL=ZONE  VERIFICATION=SV01                      ..
*   4 *  *FAN-1*       =DAY-SCHEDULE     (1,8) 0  (9,18) 1  (19,24) 0                   ..
*   5 *  *FAN-2*       =DAY-SCHEDULE     (1,24) 0                                       ..
*   6 *  *FAN-WEEK*    =WEEK-SCHEDULE    (MON,FRI) *FAN-1*  (WEH)  *FAN-2*              ..
*   7 *  *FAN-SCHED*   =SCHEDULE         THRU DEC 31 *FAN-WEEK*                         ..
*   8 *  *HEAT-1*      =DAY-SCHEDULE     (1,8) 55  (9,18) 69  (19,24) 55                ..
*   9 *  *HEAT-2*      =DAY-SCHEDULE     (1,24) 55                                      ..
*  10 *  *HEAT-WEEK*   =WEEK-SCHEDULE    (MON,FRI) *HEAT-1*  (WEH) *HEAT-2*             ..
*  11 *  *HEAT-SCHED*  =SCHEDULE         THRU DEC 31  *HEAT-WEEK*                       ..
*  12 *  *COOL-1*      =DAY-SCHEDULE     (1,8) 99  (9,18) 71  (19,24) 99                ..
*  13 *  *COOL-2*      =DAY-SCHEDULE     (1,24) 99                                      ..
*  14 *  *COOL-WEEK*   =WEEK-SCHEDULE    (MON,FRI) *COOL-1*  (WEH) *COOL-2*             ..
*  15 *  *COOL-SCHED*  =SCHEDULE         THRU DEC 31  *COOL-WEEK*                       ..
*  16 *  *AIR*         =ZONE-AIR       OUTSIDE-CFM/PER=7.                               ..
*  17 *  *CONTROL*     =ZONE-CONTROL   DESIGN-HEAT-TEMP=69  DESIGN-COOL-TEMP=71
*  18 *                               HEAT-TEMP-SCHED=*HEAT-SCHED*
*  19 *                               COOL-TEMP-SCHED=*COOL-SCHED*
*  20 *                               THROTTLING-RANGE=2
*  21 *                               THERMOSTAT-TYPE=DUAL-SET-POINT                   ..
*  22 *  SPACE1-1      =ZONE           ZONE-TYPE=CONDITIONED
*  23 *                               ZONE-AIR=*AIR*
*  24 *                               ZONE-CONTROL=*CONTROL*                           ..
*  25 *  SPACE2-1      =ZONE           LIKE SPACE1-1                                    ..
*  26 *  SPACE3-1      =ZONE           LIKE SPACE1-1                                    ..
*  27 *  SPACE4-1      =ZONE           LIKE SPACE1-1                                    ..
*  28 *  SPACE5-1      =ZONE           LIKE SPACE1-1                                    ..
*  29 *  PLENUM-1      =ZONE           ZONE-TYPE=PLENUM                                 ..
*  30 *  *S-CONT*      =SYSTEM-CONTROL   COOLING-SCHEDULE=*FAN-SCHED*
*  31 *                                 HEATING-SCHEDULE=*FAN-SCHED*
*  32 *                                 COOL-SET-TEMP=55
*  33 *                                 MAX-SUPPLY-TEMP=105
*  34 *                                 MIN-SUPPLY-TEMP=55
*  35 *                                 COOL-CONTROL=CONSTANT
*  36 *                                 MAX-HUMIDITY=0.01
*  37 *                                 MIN-HUMIDITY=0.008                               ..
*  38 *  *S-AIR*       =SYSTEM-AIR       OUTSIDE-CONTROL=ENTHALPY                         ..
*  39 *  *S-FANS*      =SYSTEM-FANS      FAN-SCHEDULE=*FAN-SCHED*
*  40 *                                 FAN-CONTROL=INLET
*  41 *                                 SUPPLY-STATIC=3.5
*  42 *                                 SUPPLY-EFF=0.8
*  43 *                                 RETURN-STATIC=1.0
*  44 *                                 RETURN-EFF=0.8                                   ..
*  45 *  *S-TERM*      =SYSTEM-TERMINAL REHEAT-DELTA-T=45
*  46 *                                 MIN-CFM-RATIO=0.15                               ..
*  47 *  *VAR-VOL*     =SYSTEM           SYSTEM-TYPE=VAVS
*  48 *                                 SYSTEM-CONTROL=*S-CONT*
*  49 *                                 SYSTEM-FANS=*S-FANS*
*  50 *                                 SYSTEM-AIR=*S-AIR*
*  51 *                                 SYSTEM-TERMINAL=*S-TERM*
*  52 *                                 VARIABLE-TEMP=ON
*  53 *                                 SIZING-RATIO=1
*  54 *                                 RETURN-AIR-PATH=PLENUM-ZONE
*  55 *                                 PLENUM-NAMES=PLENUM-1
*  56 *                                 ZONE-NAMES=SPACE1-1  SPACE2-1  SPACE3-1
*  57 *                                            SPACE4-1  SPACE5-1  PLENUM-1          ..
*  58 *  *WONDER*      =PLANT-ASSIGNMENT SYSTEM-NAMES = *VAR-VOL*                       ..
*  59 *  END /* SYSTEMS */                                                               ..
```

PROJECT- EXAMPLE BUILDING 3 USER NAME CAL-ERDA 1.3 12 NOV 1

REPORT SV01 SYSTEM DESIGN PARAMETERS

SYSTEM NAME	DESIGN CFM	MIN CFM	MIN OUTSIDE RATIO	SUP FAN KW	RET FAN KW	ALTITUDE MULT
VAR-VOL	5309.	.15	.07	2.73	.78	1.00

ZONE NAME	DESIGN CFM	OUTSIDE CFM	HEAT KBTU/HR	COOL KBTU/HR	PEOPLE	MULTI
SPACE1-1	1880.	80.	-32.28	32.44	10.6	1.0
SPACE2-1	660.	40.	-7.64	11.48	4.6	1.0
SPACE3-1	1130.	80.	-33.06	19.60	10.6	1.0
SPACE4-1	530.	40.	-7.68	9.09	4.6	1.0
SPACE5-1	950.	140.	-18.04	16.39	19.8	1.0
PLENUM-1	0.	0.	0.00	0.00	0.0	1.0

PLANT SIZING INFORMATION

HEATING MAXIMUM = -148315. COOLING MAXIMUM = 125863. ELECTRICAL MAXIMUM = 22.

PROJECT- EXAMPLE BUILDING 3 USER NAME CAL-ERDA 1.3 12 NOV

REPORT S01 SYSTEM LOAD SUMMARY

SYSTEM *VAR-VOL* TYPE VAVS

MONTH	HEATING ENERGY (MBTU)	TIME OF MAXIMUM DAY	HOUR	MAXIMUM LOAD (KBTU/HR)	COOLING ENERGY (MBTU)	TIME OF MAXIMUM DAY	HOUR	MAXIMUM LOAD (KBTU/HR)	ELECTRICAL ENERGY (KWH)	MAXIMUM LOAD (KW)
JAN	-21.029	2	9	-148.315	.013	14	18	.562	5267.	21.
FEB	-18.570	4	9	-140.557	.010	28	11	1.057	4602.	21.
MAR	-15.987	18	14	-134.040	.034	6	18	5.009	5080.	21.
APR	-9.717	22	9	-133.419	1.012	26	17	43.528	5207.	21.
MAY	-4.080	13	8	-131.693	2.867	22	16	63.111	5247.	21.
JUN	-.482	24	8	-68.607	9.115	20	17	107.344	4880.	21.
JUL	0.000	31	24	0.000	19.654	8	17	125.863	5403.	22.
AUG	0.000	31	24	0.000	18.597	19	17	124.343	5384.	22.
SEP	-.317	23	8	-84.635	7.535	11	15	108.978	4915.	21.
OCT	-1.954	21	8	-132.550	2.628	4	17	71.944	5441.	21.
NOV	-8.728	29	10	-133.704	.333	1	16	48.888	4848.	21.
DEC	-15.349	17	10	-133.923	.011	2	13	.777	4721.	21.
TOTAL	-96.214				61.811				60995.963	
MAX				-148.315				125.863		21.992

No text below this line

P D L P R O C E S S O R I N P U T D A T A

```
                1         2         3         4         5         6         7         8
       12345678901234567890123456789012345678901234567890123456789012345678901234567890

*   1 *  /* INPUT PLANT */
*   2 *
*   3 *          /*EQUIPMENT DESCRIPTION*/
*   4 *
*   5 *
*   6 *                   /* BOILER */
*   7 *
*   8 *  SBOIL1=  EQUIPMENT
*   9 *          TYPE=STMB            /*CODE NAME IS STMB FOR BOILER*/
*  10 *          SIZE = 0.2           /*CAPACITY IS 0.2 MBTU/HR*/
*  11 *          AVAILABLE=1          /*ONE UNIT IS AVAILABLE FOR OPERATION*/
*  12 *          NUMBER=1             /*ONE UNIT IS PRESENT ON SITE*/
*  13 *          ..
*  14 *
*  15 *          /*BOILER COSTS ARE DEFAULTED*/
*  16 *
*  17 *                   /* CHILLERS */
*  18 *
*  19 *  DBLB1=   EQUIPMENT
*  20 *          TYPE=DBUN      SIZE=.18
*  21 *          AVAILABLE=1    NUMBER=1
*  22 *          ..
*  23 *
*  24 *          /*CHILLER COSTS ARE DEFAULTED*/
*  25 *
*  26 *                   /* COOLING TOWER */
*  27 *
*  28 *  CTOW1=   EQUIPMENT
*  29 *          TYPE=CTOWR     SIZE=.22
*  30 *          AVAILABLE=1    NUMBER=1
*  31 *          ..
*  32 *
*  33 *          /*TOWER COSTS ARE DEFAULTED*/
*  34 *
*  35 *                   /* ENERGY COSTS */
*  36 *
*  37 *          ENERGY-COST          /*SPECIFY COST FOR BOILER FUEL*/
*  38 *          RESOURCE=BOILER
*  39 *          UNIT=100000          /*100000 BTU PER ENERGY UNIT (THERM)*/
*  40 *          COST=0.22            /*COST PER THERM IS UNIFORM AT $0.22*/
*  41 *          ESCALATION=10        /*RATE OF ESCALATION OF FUEL COST (RELATIVE TO*/
*  42 *                               /*GENERAL INFLATION) IS 10 PCT PER YEAR*/
*  43 *          ..
*  44 *          ENERGY-COST          /*SPECIFY COST OF PURCHASED ELECTRICITY*/
*  45 *          RESOURCE=ELECT
*  46 *          UNIT=3413            /*3413 BTU PER ENERGY UNIT (KWH)*/
*  47 *          COST=0.045           /*COST PER KWH IS UNIFORM AT $0.045*/
*  48 *          ESCALATION=6         /*RELATIVE RATE OF ESCALATION OF ELECTRICITY*/
*  49 *                               /*COST IS 6 PCT PER YEAR*/
*  50 *          ..
*  51 *
*  52 *                   /* LIFE-CYCLE COST PARAMETERS */
*  53 *
*  54 *          LIFE-CYCLE-RATES
*  55 *          DISCOUNT-RATE=8      /*RELATIVE DISCOUNT (INTEREST) RATE IS 8 PCT*/
*  56 *          LABOR-INFLTN=0       /*RELATIVE LABOR-COST INFLATION RATE IS ZERO*/
*  57 *          MATERIALS-INFLTN=0   /*RELATIVE MATERIAL-COST INFLATION IS ZERO*/
*  58 *          ..
*  59 *
*  60 *          LIFE-CYCLE-COSTS
*  61 *          PROJECT-LIFE=25      /*LIFETIME OF PROJECT IS 25 YEARS*/
*  62 *          LABOR=25             /*LABOR COSTS $25 PER HOUR*/
*  63 *          SITE-FACTOR=1        /*ADJUSTMENT FACTOR WHICH MULTIPLIES  */
*  64 *                               /*EQUIPMENT MAINTENANCE AND CONSUMABLES COSTS*/
*  65 *          ..
*  66 *  END   /*DOUBLE BUNDLE COMPRESSOR AND BOILER PLANT*/                    ..
```

E D L P R O C E S S O R I N P U T D A T A

```
                1         2         3         4         5         6         7         8
12345678901234567890123456789012345678901234567890123456789012345678901234567890123456789 0

*   1 *  /* INPUT ECONOMICS */
*   2 *
*   3 *      /*ECONOMICS-- BASELINE AND NON-PLANT COSTS DESCRIPTION*/
*   4 *
*   5 *           /*DEFINE LIFE-CYCLE COST PARAMETERS*/
*   6 *
*   7 *           LIFE-CYCLE-RATES
*   8 *           DISCOUNT-RATE=8       /*RELATIVE DISCOUNT RATE IS 8 PCT PER YEAR*/
*   9 *           LABOR-INFLTN=0        /*RELATIVE LABOR-COST INFLATION IS ZERO*/
*  10 *           MATERIALS-INFLTN=0    /*RELATIVE MATERIALS COST INFLATION IS ZERO*/
*  11 *           PROJECT-LIFE=25       /*LIFETIME OF PROJECT IS 25 YEARS*/
*  12 *           LABOR=25              /*LABOR COSTS $25 PER HOUR*/
*  13 *           ..
*  14 *
*  15 *
*  16 *           /*SPECIFY BASELINE DATA (FROM PREVIOUS RUN)*/
*  17 *           /*BASELINE CASE HAS U=0.19 ROOF AND SINGLE-GLAZING*/
*  18 *           /*PRESENT CASE HAS U=0.04 ROOF AND DOUBLE-GLAZING*/
*  19 *
*  20 *           BASELINE
*  21 *           PLANT-COST=185.2      /*BASELINE LIFE-CYCLE PLANT EQUIPMENT COST IN $K*/
*  22 *           FUEL-COST=94.4        /*BASELINE LIFE-CYCLE FUEL COST IN $K*/
*  23 *           FUEL-USE=10.7         /*BASELINE LIFE-CYCLE FUEL USE IN GBTU*/
*  24 *           ..
*  25 *
*  26 *           /*SPECIFY COST OF ADDITIONAL ROOF INSULATION*/
*  27 *
*  28 *           ROOF-INSUL-1=  COST
*  29 *           UNIT-NAME=SQFT
*  30 *           NUMBER-OF-UNITS=5000  /*ROOF AREA IS 5000 SQFT*/
*  31 *           FC-PER-UNIT=0.30     /*INCREMENTAL FIRST COST IS $0.30 PER SQFT*/
*  32 *           ..
*  33 *
*  34 *           /*SPECIFY COST OF DOUBLE-PANE EXTERIOR GLASS VS SINGLE PANE*/
*  35 *
*  36 *           DOUBLE-PANE-2= COST
*  37 *           UNIT-NAME=SQFT
*  38 *           NUMBER-OF-UNITS=560   /*EXTERIOR GLASS AREA IS 560 SQFT*/
*  39 *           FC-PER-UNIT=3.00     /*INCREMENTAL FIRST COST IS $3.00 PER SQFT*/
*  40 *           ..
*  41 *
*  42 *  END /*ECONOMICS*/                                                          ..
```

REPORT- E03 LIFE-CYCLE SAVINGS/INVESTMENT STATISTICS CAL-ERDA 1

LIFE-CYCLE COMPARISON-- THIS RUN VS BASELINE

	INVEST-MENT(K$)	PLANT-EQUIP COST(K$)	ENERGY COST(K$)	PLANT-EQUIP + ENERGY COST(K$)	ENERGY USE(GBTU)
BASELINE		185.20	94.40	279.60	10.70
THIS RUN	3.18	185.29	88.03	273.32	9.05
SAVINGS		-.09	6.37	6.28	1.65

SAVINGS/INVESTMENT STATISTICS

COST SAVINGS (K$)	INVESTMENT (K$)	SAVINGS-TO-INVESTMENT RATIO	FUEL SAVINGS (MBTU)	FUEL-SAVINGS-TO-INVESTMENT RATIO(MBTU/$)	PAYBACK PERIOD (YRS)
6.3	3.2	2.0	1650.8	.52	12.7

No text below this line

CENTRAL PLANT ENERGY UTILIZATION SUMMARY

MONTH	TOTAL HEAT ENERGY (GBTU)	TOTAL ELECTR ENERGY (GBTU)	COOLING ENERGY (GBTU)	RCVRED ENERGY (GBTU)	WASTED RCVRABL ENERGY (GBTU)	HEAT EN INPUT COOLING (GBTU)	ELEC EN INPUT COOLING (GBTU)	ENERGY INPUT HEATING (GBTU)	ENERGY INPUT ELECTRC (GBTU)	TOTAL FUEL INPUT (GBTU)	TOTAL ENERGY INPUT (GBTU)	AVERAGE PLANT EFFIC (PERCT)
1	.021	.019	.000	.002	.000	0.000	.002	.030	.056	.028	.084	47.
2	.019	.016	.000	.001	0.000	0.000	.001	.027	.049	.025	.074	47.
3	.016	.018	.000	.002	.000	0.000	.002	.023	.055	.021	.076	45.
4	.010	.019	.001	.002	.001	0.000	.004	.015	.058	.011	.070	42.
5	.004	.020	.003	.002	.002	0.000	.005	.008	.061	.004	.065	38.
6	.000	.020	.009	.000	.001	0.000	.007	.001	.060	.000	.060	34.
7	0.000	.024	.020	0.000	0.000	0.000	.012	0.000	.072	0.000	.072	33.
8	0.000	.024	.019	0.000	0.000	0.000	.012	0.000	.071	0.000	.071	33.
9	.000	.020	.008	.000	.000	0.000	.006	.001	.059	.000	.060	34.
10	.002	.021	.003	.001	.001	0.000	.005	.004	.062	.002	.064	35.
11	.009	.017	.000	.001	.000	0.000	.002	.014	.052	.013	.065	40.
12	.015	.017	.000	.001	.000	0.000	.001	.023	.050	.021	.071	45.
	.096	.235	.062	.012	.006	0.000	.059	.146	.705	.127	.832	39.

LIFE-CYCLE PLANT COST SUMMARY

	ANNUAL	LIFETIME(25 YRS)
PLANT EQUIPMENT COST	7.4	185.3 K$
ENERGY COST	3.5	88.0 K$
ENERGY USE (NET)	.4	9.0 GBTU

- PLANT EQUIPMENT PLUS ENERGY
- LIFE CYCLE COST FOR 25 YEARS = .2733 (M$)

NOTES TO ABOVE TABLE
(1) ANNUAL QUANTITIES ARE LIFE-CYCLE VALUES DIVIDED BY PROJECT LIFETIME
(2) ENERGY USE IS NET, I.E., AT BUILDING BOUNDARY

No text below this line

This report was done with support from the Department of Energy. Any conclusions or opinions expressed in this report represent solely those of the author(s) and not necessarily those of The Regents of the University of California, the Lawrence Berkeley Laboratory or the Department of Energy.

TECHNICAL INFORMATION DEPARTMENT
LAWRENCE BERKELEY LABORATORY
UNIVERSITY OF CALIFORNIA
BERKELEY, CALIFORNIA 94720