Presented at the 7th Symposium on Engineering Problems of Fusion Research, Knoxville, TN, October 25-28, 1977

MASTER

LBL-6373

CONF-771029--198

Energy and Environment Division

Rectangularly Shaped Large Area Plasma Source

K. W. Ehlers

October 1977

Lawrence Berkeley Laboratory University of California/Berkeley

Prepared for the U.S. Department of Energy under Contract No. W-7405-ENG-48

DISTRIBUTION OF THIS DOCUMENT IS UNLIMITED

LBL-6373

LEGAL NOTICE

This report was prepared as an account of work sponsored by the United States Government. Neither the United States nor the Department of Energy, nor any of their employees, nor any of their contractors, subcontractors, or their employees, makes any warranty, express or implied, or assumes any legal liability or responsibility for the accuracy, completeness or usefulness of any information, apparatus, product or process disclosed, or represents that its use would not infringe privately owned rights.

RECTANGULARLY SHAPED LARGE AREA PLASMA SOURCE*

K. W. Ehlers

Lawrence Berkeley Laboratory
University of California
Berkeley, California 94720

NOTICE
This report was prepared as an account of work sponsored by the United States Government. Neither the United States nor the United States Department of Energy, nor any of their employees, nor any of their contractors, subcontractors, or their employees, makes any warranty, express or implied, or assumes any legal liability or responsibility for the accuracy, completeness or usefulness of any information, apparatus, product or process disclosed, or represents that its use would not infringe privately owned rights.

The next generation of U. S. fusion experiments, which includes the TFTR, MFTF, and Doublet III, will all utilize the injection of highly energetic neutral beams for plasma heating. In this paper we will discuss some of the requirements for the plasma sources from which these beams will originate and we will describe the operating characteristics of the plasma source which has been developed for the Tokamak Fusion Test Reactor (TFTR) beam lines.

Introduction

The plasma source to be described was developed primarily to meet the TFTR beam-line requirements. These sources, of which there will be a total of twelve (three each for four beam lines) must operate with a pulse duration of 0.5 sec and provide about 65 A of deuterium ions. These ions will then be accelerated to 120 keV before being converted to neutrals by electron-capture collisions. The consideration of the ion optics as well as the voltage holding capability of the ion-accelerator structure has determined that the extraction ion-current density for deuterium should be about 0.28 A/cm^2.[1] The slot-type extractor geometry which will be employed has a transparency of 0.6 and thus the source must illuminate an area of 400 cm^2. For TFTR, the source has been designed to provide the required ion-current density to a rectangular accelerator structure with dimensions of 10- by 40-cm.

The optics of the ion accelerating array are very sensitive to plasma density, hence plasma density variations either in position or in time must be minimized throughout this very large area.

Plasma Generator

The plasma source, two views of which are shown in Fig. 1, is designed with a rectangular shape. This shape is particularly desirable when several such sources are used to inject into a common entrance aperture. Sources with this shape were first used on the Lawrence Livermore Laboratory's 2XIIB experiment where six sources were used to inject into a single aperture.[2] This shape allows a much more efficient use of the area available for sources by increasing the packing factor. This shape is also desirable when the entrance port through which the beams must pass is rectangular in shape. This is often the case as apertures are generally more restricted in one dimension by the position of coils or other machine structure, and in order to maximize the entrance size, the port becomes rectangular. For example, the entrance apertures for the TFTR are about 40-cm wide and 80-cm high, and the sources will be mounted with the long dimension vertical. For Doublet III, where the apertures are about 34-cm wide and 17-cm high, such sources would be mounted with the long dimension horizontal.

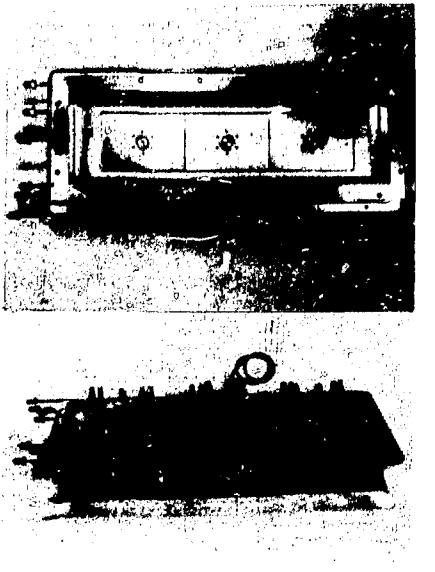

Figure 1. Two photographs of the rectangular plasma generator. (External view above and internal view below.)

The plasma source utilizes a high-current, low voltage discharge, with no externally applied magnetic fields. The advantages of this type of discharge are that it produces a dense and uniform plasma that is very quiescent and highly reproducible from pulse to pulse. The source structure is relatively simple, rugged, and compact.

In a high-current discharge the cathode is the most important design consideration, and in our sources, the cathode consists of an array of tungsten filaments. Although we have been able to emit about twice as much current as is used to heat the filament for pulse lengths

*Work done under the auspices of the United States Department of Energy.

DISTRIBUTION OF THIS DOCUMENT IS UNLIMITED

of tens of milliseconds, this condition is intrinsically unstable for long pulse lengths. For pulse lengths of 0.5 sec we try to limit the emission current per filament to about half the heater current. In general, the filament will cend to cool from emission, an effect which can change the arc impedance as well as the plasma density during a pulse. Thus, for pulse times which exceed the thermal capacity of the filament, one must reduce the emission per filament in order to obtain a plasma density which does not change with time. In this source, 204 hairpin filaments, each 0.5-mm diam, 10.5-cm overall length, and heated by 24 A dc are used. The filaments are resistively heated to about 3100°K, and are pulsed on for just a few seconds prior to establishing the discharge. Unlike the "50-A" geometry[3] where filaments were located in a rectangular array, the filaments are now positioned in a row near the two walls of the long dimension only, as seen in Fig. 1. The side wall filaments have been removed in order to increase the symmetry of the discharge. The plasma density can be expected to fall off in the region near the side walls, and thus the source is made longer (55 cm) than the length of the extraction structure (40 cm). In addition, the filaments are oriented 90° to those in the "50-A" unit. This orientation is shown in Fig. 2, which is a cross-sectional drawing of the plasma source. This arrangement not only allows the addition of more filaments per unit length, but it utilizes the unavoidable magnetic field created by the dc heater current in a SURMAC[4] configuration. The solenoidal magnetic field of about 60 G, which is present in the region between the two legs of the filament, is sufficient to reflect incoming primary electrons. As shown in Fig. 2, the negative leg of the filament from which most of the electrons are emitted, is on the inside or the side nearest the plasma. Prior to the construction of this large source structure, two smaller versions were constructed and tested; one a 14-cm-diam round, and the other a 16-cm square geometry.[5]

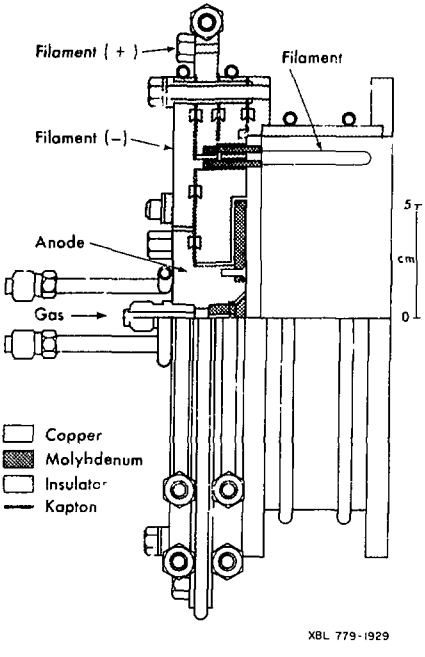

Figure 2. Cross-sectional drawing of the plasma source.

Three electrically isolated anodes are located on the wall opposite the beam-forming electrode, as shown in both Figs. 1 and 2. This location was selected as it eliminates this wall as a source for arc "spotting" which previously had occurred on occasions during faults in the ion accelerator structure when this wall was electrically isolated. These faults often result in a large number of backstreaming electrons which are capable of depressing the wall potential sufficiently negative to cause unipolar arcs. With the electron impingement region at positive potential, this effect is eliminated; however to intercept these backstreaming electrons, the anode size must be of approximately the same dimensions as the accelerator grid. The anodes are electrically connected to the arc power supply through decoupling resistors of a few mΩ in series with each anode.

Gas enters the system through the center of the anodes and is controlled by a single pulsed gas valve. Pressure measurements made with a capacitance manometer during source operation, indicated the source pressure to be about 10 mTorr (1.33 Pa). Source pressure measurements during ion extraction have not been made. During ion extraction, the source pressure is reduced due to the effective pumping action of the exiting ion beam. This reduction can result in both a change in arc impedance as well as a change in the plasma density. Checks have been made which confirm that while the overall level of plasma density may change slightly during ion extraction, the plasma density profile remains unaffected.

The floating potentials of the remaining segments of the source body were found to float very near cathode potential, thus these elements could be electrically connected to the negative leg of the arc power supply. No alteration in source performance resulted from this change; but, in addition to a more simplified source construction, it has sizably reduced the beam-forming structure as a source for unipolar arc formation which had occurred during grid sparking when this electrode was electrically floating.

In order to determine the saturated-ion-current density profile throughout the very large ion exit region, a special probe plate was required. This plate is mounted at the position of the beam-forming electrode during source tests. The plate, which is shown in Fig. 3, contains five movable Langmuir probes as well as a number of slots which simulate the gas conductance of the

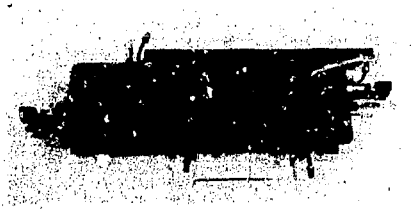

Figure 3. Test probe plate with movable probes.

accelerator grids. With the use of this probing arrangement it was possible to get a rather complete map of the ion-current-density. Two long "horizontal" probes, located 6 cm apart or 3 cm each side of center, are used to scan the profile in the long, or 40-cm dimension. These probes can be moved in a distance of 42 cm from each of the side walls. Three "vertical" probes are used to scan the profile in the narrow, or 10-cm dimension. These move 7.5 cm from the source walls to a position that is 2.5 cm past the center line. The probes sample the saturated-ion-current density immediately in front of the surface which is representative of the beam-forming electrode.

Plots of the saturated-ion-current density as read by all five of the movable probes are shown in Fig. 4. For perspective, the relative positions of the source walls, the anodes and cathodes, as well as the position of the 10- by 40-cm ion exit array are included. Figure 4 also contains a retouched photograph of an oscilloscope trace indicating the arc current and voltage waveforms at the time the probe measurements were made. The arc operating conditions were: arc voltage - 40 V, arc current - 2000 A, gas flow rate - 16 Torr-ℓ/sec, and pulse length - 0.5 sec. A second photograph shows the output waveform of each of the three vertical probes, with each located at the 0-cm position. Both photographs are of five successive 0.5-sec shots overlaid on a storage type oscilloscope, and they serve to demonstrate the shot-to-shot reproducibility of the source operation. The 60-Hz ripple on the current and probe waveforms is the result of insufficient filtering in the test power supply. As can be seen, at the saturated-ion-current density of 0.295 A/cm^2, the profile is [illegible] to ± 5% throughout the entire 10-by 40-cm ion extraction region. The data for Fig. 4 were taken with the source operating with deuterium gas. Operation with hydrogen is similar, except that for the same level of arc current we obtain approximately 1.25 times the saturated-ion-current density.

With the large heater and arc currents employed by the source, care must be taken with the wires to and from the associated power supplies. The use of just a few wires will result in a current flow within the arc body which can in turn generate magnetic fields that are detrimental to the plasma-density profile. Thus, multiple, close-coupled leads are used to distribute the currents. This plurality of leads is shown in Fig. 5, which is a photograph of the plasma source mounted on the test stand.

Bias magnetic fields, particularly those passing axially through the source must be avoided. As the physical size of sources becomes larger, rather low levels of extraneous magnetic fields are capable of altering the trajectory of the energetic electrons within the source. Magnetic fields sufficiently high to result in an electron larmor radius equal to about one half the source internal width, will result in an ordering of the arc current such that this ordered current in turn can result in a magnetic field that is in phase with the bias field that produced it. For externally applied magnetic fields of 10-G or less, it in the plasma density profile which is affected. Above that level, the arc impedance is affected along with the introduction of noise or "hash".

The large rectangular plasma source has been mated with a 10- by 40-cm ion accelerator structure (described elsewhere at this conference, Refs. 6, 7) mounted on the test stand, and is being made ready for full-scale testing of the neutral beam system (see Ref. 8).

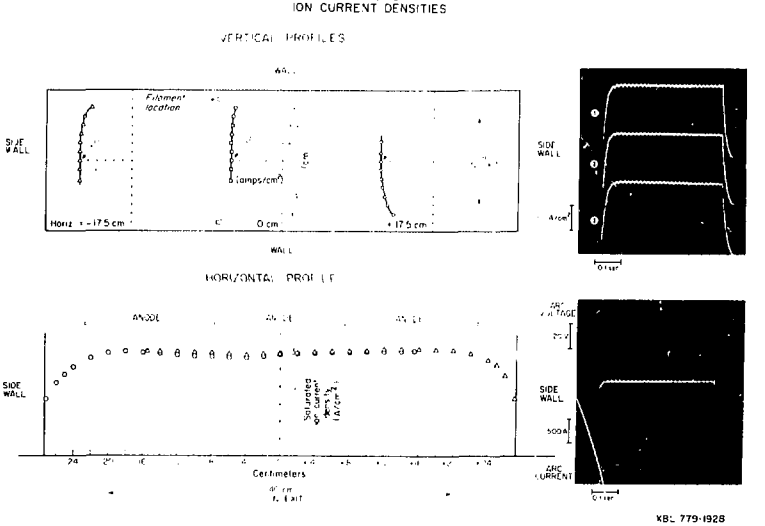

Figure 4. Ion-current-density profile for the 10- by 40-cm rectangular plasma source. Also shown are oscilloscope traces of arc current and voltage and the saturated-ion-current waveforms of the three "vertical" probes.

Figure 5. 10- by 40-cm rectangular plasma source mounted on test stand.

Acknowledgements

The author wishes to acknowledge the assistance of M. D. Williams for conducting and evaluating the test operations, and to L. A. Biagi for aiding in the design and construction of the source assembly. Discussions with W. B. Kunkel and other members of the Lawrence Berkeley Laboratory Neutral-Beam Group were valuable and this assistance is gratefully acknowledged.

References

1. K. W. Ehlers, K. H. Berkner, W. S. Cooper, E. B. Hooper, R. V. Pyle, and J. W. Stearns, "Conceptual Design of a Neutral-Beam Injection System for the TFTR," Proc. Sixth Symposium on Engineering Problems of Fusion Research, San Diego, Ca., 1975, pg. 855.

2. S. M. Hibbs, "Neutral Beam Injection in 2XIIB," Proc. Sixth Symposium on Engineering Problems of Fusion Research, San Diego, Ca., 1975, pg. 868.

3. K. W. Ehlers, W. R. Baker, K. H. Berkner, W. S. Cooper, W. B. Kunkel, R. V. Pyle, and J. W. Stearns, "Large Area Plasma Sources," Proc. Second Symposium on Ion Sources and Formation of Ion Beams, Berkeley, Ca., 1974, I-5-1.

4. A. Y. Wong et al., Phys. Rev. Lett. 35, 1156 (1975).

5. K. W. Ehlers, K. H. Berkner, W. S. Cooper, J. M. Haughian, W. B. Kunkel, B. A. Prichard, Jr., R. V. Pyle, and J. W. Stearns, "120-keV Neutral-Beam Injection System Development," Proc. 9th Symposium on Fusion Technology, Garmisch, 1976, p. 795.

6. L. A. Biagi and J. A. Paterson, "On Fabrication and Brazing of 120-keV, 65-A, 0.5-Sec Accelerator Grid Assemblies," paper presented at this conference.

7. J. A. Paterson, T. J. Duffy, J. M. Haughian, L. A. Biagi and D. P. Yee, "The Design and Fabrication of an Ion Accelerator for TFTR-Type Neutral Beam System," paper presented at this conference.

8. K. H. Berkner, W. S. Cooper, K. W. Ehlers, and R. V. Pyle, "Performance of a Developmental 120-keV 10-A Deuterium Neutral Beam System," paper presented at this conference.

This report was done with support from the Department of Energy. Any conclusions or opinions expressed in this report represent solely those of the author(s) and not necessarily those of The Regents of the University of California, the Lawrence Berkeley Laboratory or the Department of Energy.