Submitted to the Journal of
Nuclear Physics B

LBL-6428 c.1
Preprint

QUARK DIAGRAMS FOR BARYONS

Y. Eylon and J. Finkelstein

April 1977

For Reference

Not to be taken from this room

Prepared for the U. S. Energy Research and
Development Administration under Contract W-7405-ENG-48

DISCLAIMER

This document was prepared as an account of work sponsored by the United States Government. While this document is believed to contain correct information, neither the United States Government nor any agency thereof, nor the Regents of the University of California, nor any of their employees, makes any warranty, express or implied, or assumes any legal responsibility for the accuracy, completeness, or usefulness of any information, apparatus, product, or process disclosed, or represents that its use would not infringe privately owned rights. Reference herein to any specific commercial product, process, or service by its trade name, trademark, manufacturer, or otherwise, does not necessarily constitute or imply its endorsement, recommendation, or favoring by the United States Government or any agency thereof, or the Regents of the University of California. The views and opinions of authors expressed herein do not necessarily state or reflect those of the United States Government or any agency thereof or the Regents of the University of California.

QUARK DIAGRAMS FOR BARYONS*

Y. Eylon

Lawrence Berkeley Laboratory
University of California
Berkeley, California 94720

and

J. Finkelstein

Department of Physics
Columbia University
New York, N. Y. 10027

April 29, 1977

Abstract

Quark diagrams for baryons are defined. A transformation from a complete set of hadronic amplitudes to a complete set of quark-diagram amplitudes is constructed. The various twists on baryon propagators are related to the permutation symmetry of baryons. A factor of N_f per quark loop is established.

I. INTRODUCTION

The purpose of this paper is to define quark diagrams for baryons. We assume an underlying theory, in which all physical amplitudes are given in terms of particle diagrams. The lines of the particle diagrams represent hadrons, both baryons and mesons. These diagrams could be, for example, Feynman-diagrams, in which

* This research was supported in part by the U. S. Energy Research and Development Administration, under the auspices of the Division of Physical Research.

the internal lines represent virtual hadrons, or reggeon-diagrams (dual or not dual) in which the internal lines represent reggeon exchanges.

Our purpose is to define all the quark diagrams associated with any given particle-diagram, to give a prescription for calculating them, and the rules for calculating physical amplitudes in terms of these quark-diagrams. Among other things, we shall define the concept of a twist on a baryon propagator, and establish the fact that each closed quark loop is associated with a factor of N_f (unlike the meson case, the existence of the N_f factor is not trivial). Once the quark diagrams have been defined, they can be useful for determining necessary conditions (like the pattern of exchange-degeneracy for baryons) for physical requirements such as the absence of certain exotic discontinuities. The reason for this is that a very convenient way to impose such requirements is to assume an appropriate behavior of specific quark-diagrams. This is just a generalization of the situation in the meson sector: There we know that we can impose the restrictions of the planar theory, by assuming the right behavior for the quark-diagrams (e.g. no u-channel discontinuity in the s-t quark diagram). Such an approach may help us in understanding the concept of "planar" theory for baryons (if any). However, in this paper we shall deal only with the general framework, and give only results which are independent of any additional physical assumptions.

We believe that the present scheme can be useful for many applications of the "Dual-Unitarity" type[1] for processes which involve baryons. Many applications have already been discussed in the

literature[2] using the concept of quark diagrams for baryons, without giving them a precise meaning. We hope that by giving an exact definition to the baryon twists, giving the rules for avoiding double-counting, and by establishing the existence of the N_f factors, some of the controversial issues could be resolved. For example, our experience from the meson sector tells us that the relative importance of a twist on a produced line in the unitarity equation is crucial to the behavior of many physical quantities.[3] Using our scheme, it should be possible to understand the role of a twist on a produced baryon line (which is crucial, for example, for estimating exotic exchanges[4]).

Our approach is very general for the following reasons:

(a) We do not have to assume anything about the details of the underlying particle-diagrams. In particular they could be ϕ^3 Feynman-diagrams, dual-model diagrams, multi-Regge multiperipheral diagrams, reggeon-field theory diagrams, etc.

(b) We can treat all particle-diagrams on an equal footing (including diagrams with meson loops, baryon loops and nonplanar diagrams).

(c) Our method applies for any number, N_f, of flavors and for any number, N_c, of colors (or of quarks in the baryon.). We will explicitly develop the rules for defining quark diagrams for the physical value $N_c = 3$, but shall indicate how these rules can be generalized to arbitrary N_c.

(d) It is easier to follow our rules, if one has in mind a picture in which the baryon is made in some general sense out of three quarks. Therefore, we are using for clarity a simple picture in which the baryon is actually a quantum-mechanical state of three quarks. However, our rules are more general than this and they can be constructed without mentioning quarks.

(e) We assume that all hadrons have the structure of $q\bar{q}$, qqq or $\bar{q}\bar{q}\bar{q}$. If more complicated structures exist (like $qq\bar{q}\bar{q}$) it is straight-forward to generalize the scheme.

On the other hand, we have to make the following assumptions:

(a) Exact $SU(N_f)$ symmetry. This is not a severe restriction, because the modification of our scheme to a realistic world with broken $SU(N_f)$ symmetry, is on an equal footing to the modification of the various $SU(3)$ relations between physical amplitudes, to broken $SU(3)$.

(b) N_f^2 - degeneracy for mesons (e.g. nonet degeneracy for $N_f = 3$). This extra degeneracy, which is not required by $SU(N_f)$ symmetry is necessary in order to guarantee the continuous flow of flavors in quark diagrams.[5] This assumption restricts only the spectrum of the "bare" mesons (e.g. the planar mesons). For physical mesons this degeneracy is broken due to higher order contributions (of the pomeron type[6]).

(c) We assume, for simplicity, only three-point vertices, MMM and BBM.

(d) We assume the OZI[7] rule for the MMM vertex, and its analogue for the BBM vertex.

Note that all these assumptions had to be introduced already on the meson level. The generalization of the scheme of Ref. 5 to baryons does not involve any extra assumption. In fact, unlike the mesons, we do not have to assume any extra degeneracy for baryons beyond $SU(N_f)$. Only when we use the scheme in order to impose further requirements on the particle-diagrams (such as the absence of discontinuities in exotic channels) we may discover that extra degeneracy is required.

We shall construct a transformation from a complete set of particle-diagram amplitudes to a complete set of quark-diagram amplitudes. We shall also find the inverse transformation which might be very useful to translate any physical constraint on quark diagrams into hadronic language. We can construct these transformations without ever mentioning quarks. We just have to assume that all baryon representations are contained in the $SU(N_f)$ representations of three quarks. The results we get for physical amplitudes, are guaranteed to agree with those of the underlying theory just by $SU(N_f)$ invariance plus the OZI rule for both types of vertices. In particular, our results are independent of any color considerations, and our quark diagrams do not carry any color indices.

In our scheme, the twist on a baryon line is related to the permutation symmetry of the baryons, which in turn is related to the

$SU(N_f)$ symmetry (A description of the relation between representations of $SU(N_f)$ and of permutation groups can be found in Ref. 8.). This should be contrasted with the meson sector in which the twist is related to charge-conjugation symmetry. This is not surprising, since the charge-conjugation of a $q\bar{q}$ system is determined by its permutation symmetry. The distinction between the permutation-twist and the signature-twist is exactly the same as the distinction between the charge-conjugation-twist and the signature-twist in the meson sector.[9]

In this paper we define quark diagrams; we do not try to classify them according to any topological properties, such as the minimal surfaces on which they can be embedded.[10]

The organization of our paper is as follows:

		page
1.	Introduction	1
2.	Notation for Baryon States	8
3.	The Permutation Twists	15
4.	The Baryon-Baryon-Meson Vertex	21
5.	Quark Diagrams	
	a. A Simple Example	28
	b. The General Case	30
6.	Some Further Developments	
	a. Summation over Multiplets	37
	b. Representative and Untwisted Diagrams	44
	c. Resolution of N_f-factor Paradox	47
	d. What About Color, Duality and Exotics	49
7.	Summary	52

	page
Appendix: Charge-conjugation relations for baryons	54

The rules for computing quark diagrams are given at the end of Section 5b.

II. NOTATION FOR BARYON STATES

We shall start with a simple quantum-mechanical description of the baryon, as a system of 3 quarks (The generalization to any N_c is straightforward but not trivial.). The spin-location (or alterantively, the spin-momentum) states of a single quark will be denoted by $\alpha,\beta,\gamma\ldots$ indices (α, for example may describe a quark with spin up at location A.). The flavor states will be denoted by u,d,s,c..., and we assume an exact $SU(N_f)$ flavor symmetry. Of course the rules for quark diagrams we shall derive will not depend on the flavor labelling of the quark lines, nor will they require any knowledge of, for example, the spatial distribution of the quarks within a hadron. We introduce these labels in order to keep track of the permutation symmetry. Since we assume that all baryons are color singlets, the baryon states will be fully symmetric in the combined (spin-location)-flavor labels.

It is useful to consider first only baryons which are made of three different flavors: s, u, and d; we shall call this the s-u-d sector. Of course this device is not available if $N_f < 3$. Since we know that our states will be fully symmetric, we can specify a state by assigning to each flavor a spin-location label; thus some particular state might be denoted

$$\begin{array}{ll} s & \alpha \\ u & \beta \\ d & \gamma \end{array} \quad \begin{array}{l} \longrightarrow \\ \longrightarrow \\ \longrightarrow \end{array}$$

where we have introduced lines with arrows into our notation in anticipation of the labelling of the lines in a quark diagram. In this notation, there is no "first", "second", or "third" quark; the

state displayed above is completely identical to the state labelled

$$\begin{array}{ll} u & \beta \\ s & \alpha \\ d & \gamma \end{array} \quad \begin{array}{l} \longrightarrow \\ \longrightarrow \\ \longrightarrow \end{array} .$$

This identity under a <u>simultaneous</u> permutation of the (spin-location) and flavor labels demonstrates that the states are, indeed, fully symmetric.

The most general state in the s-u-d sector is of the form $\sum_{\alpha,\beta,\gamma} C_{\alpha,\beta,\gamma} \begin{array}{ll} s & \alpha \\ u & \beta \\ d & \gamma \end{array} \begin{array}{l} \longrightarrow \\ \longrightarrow \\ \longrightarrow \end{array}$. The coefficient function, C, does not have to satisfy any symmetry condition, because each term by itself is fully symmetrized, as we have just mentioned.

For a given set of three spin-location labels, say α,β,γ, there are 6 terms in the sum, which correspond to the 6 permutations of α,β,γ . We assume for simplicity, that α, β, and γ stand for three different spin-location states. Therefore, the 6 terms represent 6 different states. In addition, we have to sum over different sets of three spin location states (say α', β', γ' or α,β,γ'). Each set contains 6 terms. For simplicity we shall always consider only one set, α,β,γ . The sum over all sets is implied.

To clarify the notation, let us make some remarks in the $N_c = 2$ case. In the u-d sector, and for the α,β set, there are two states:

$$\begin{array}{ll} u & \alpha \\ d & \beta \end{array} \begin{array}{l} \longrightarrow \\ \longrightarrow \end{array} , \quad \begin{array}{ll} u & \beta \\ d & \alpha \end{array} \begin{array}{l} \longrightarrow \\ \longrightarrow \end{array} . \qquad \text{and} \qquad (1)$$

The states of definite isospin (and hence, if α and β are chosen judiciously, of definite mass), are

$$
\begin{aligned}
|I = 1,0\rangle &= \frac{1}{\sqrt{2}} \begin{array}{c} u \\ d \end{array} \begin{pmatrix} \alpha & \beta \\ \beta & \pm\ \alpha \end{pmatrix} \begin{array}{l} \rightarrow \\ \rightarrow \end{array} \\
&= \frac{1}{\sqrt{2}} \begin{pmatrix} u & d \\ d & \pm\ u \end{pmatrix} \begin{array}{c} \alpha \\ \beta \end{array} \begin{array}{l} \rightarrow \\ \rightarrow \end{array}
\end{aligned}
\tag{2}
$$

The notation in the first line of Eq. (2) emphasizes the permutation symmetry of α,β with respect to u,d, while the equivalent notation in the second line makes more transparent the $SU(N_f)$ structure. A priori, there is no reason to assume that the states with $I = 0$ and $I = 1$ are degenerate in mass; if they are not, then the states in Eq. (1) will not have definite mass. It is true that quark diagrams become much simpler if there is this extra degeneracy, for then the states in Eq. (1) can propagate simply; in fact, it can be shown that the requirement of absence of exotics in $\bar{B}B \to$ mesons will impose extra degeneracies of this type. Nevertheless, we do not now assume such degeneracy, and so we will have to work with states in definite $SU(N_f)$ multiplets, as in Eq. (2). We remark parenthetically that for mesons the situation is different.[5] The states with $I_z = 0$ analogous to those in (1) are

$$
\begin{array}{ll} u\ \alpha \rightarrow & d\ \alpha \rightarrow \\ \bar{u}\ \beta \leftarrow & \bar{d}\ \beta \leftarrow \end{array}
\quad \text{and} \quad
\tag{3}
$$

In this case, unless the states with $I = 0$ and $I = 1$ do have the same mass, a propagator can mix the states in (3), and so flavor would not flow continuously along the lines of a quark diagram. This is why we require N_f^2-degeneracy for mesons at the bare level.

Consider again the s-u-d sector for $N_c = 3$. For a given set α,β,γ there are six states, obtained by taking any one of the six columns of the following bracket:

$$
\begin{array}{l} \rightarrow s \\ \rightarrow u \\ \rightarrow d \end{array}
\begin{bmatrix} \alpha & \alpha & \gamma & \beta & \beta & \gamma \\ \beta, & \gamma, & \alpha, & \alpha, & \gamma, & \beta \\ \gamma & \beta & \beta & \gamma & \alpha & \alpha \end{bmatrix} .
\tag{4}
$$

The states in definite $SU(3)$ representations 10, 1, 8_a, 8_b are linear conbinations of these six; the coefficients for each column of (4) are

$$
\begin{aligned}
|D\rangle &= \begin{array}{l} \rightarrow s \\ \rightarrow u \\ \rightarrow d \end{array} \quad \frac{1}{\sqrt{6}} \begin{bmatrix} 1, & 1, & 1, & 1, & 1, & 1 \end{bmatrix} \\
|S\rangle &= \begin{array}{l} \rightarrow s \\ \rightarrow u \\ \rightarrow d \end{array} \quad \frac{1}{\sqrt{6}} \begin{bmatrix} 1, & -1, & 1, & -1, & 1, & 1 \end{bmatrix} \\
|\Sigma_a\rangle &= \begin{array}{l} \rightarrow s \\ \rightarrow u \\ \rightarrow d \end{array} \quad \frac{1}{\sqrt{12}} \begin{bmatrix} -2, & -2, & 1, & 1, & 1, & 1 \end{bmatrix} \\
|\Lambda_a\rangle &= \begin{array}{l} \rightarrow s \\ \rightarrow u \\ \rightarrow d \end{array} \quad \frac{1}{2} \begin{bmatrix} 0, & 0, & 1, & 1, & -1, & -1 \end{bmatrix} \\
|\Sigma_b\rangle &= \begin{array}{l} \rightarrow s \\ \rightarrow u \\ \rightarrow d \end{array} \quad \frac{1}{2} \begin{bmatrix} 0, & 0, & -1, & 1, & 1, & -1 \end{bmatrix} \\
|\Lambda_b\rangle &= \begin{array}{l} \rightarrow s \\ \rightarrow u \\ \rightarrow d \end{array} \quad \frac{1}{\sqrt{12}} \begin{bmatrix} -2, & 2, & 1, & -1, & 1, & -1 \end{bmatrix}
\end{aligned}
\tag{5}
$$

$|D\rangle(|S\rangle)$ stands for the s-u-d state of the decuplet (singlet). Each octet has two s-u-d states. We have chosen the two eigenstates of isospin, Σ^0 and Λ. The Σ (Λ) states are symmetric (antisymmetric) under $u \leftrightarrow d$. We have defined the two octets so that 8_a is symmetric, and 8_b antisymmetric, under the interchange $\beta \leftrightarrow \gamma$.

Let us label the six columns of spin-location indices in (4) as $e_1, e_2 \ldots e_6$; thus we define $e_1 \equiv \begin{pmatrix}\alpha\\ \beta\\ \gamma\end{pmatrix}$ $e_2 = \begin{pmatrix}\alpha\\ \gamma\\ \beta\end{pmatrix}$, etc. We can now leave the s-u-d sector; we might consider for example the state

$$\begin{matrix} \rightarrow u & \alpha \\ \rightarrow u & \beta \\ \rightarrow d & \gamma \end{matrix} \equiv \begin{matrix} \rightarrow u \\ \rightarrow u \\ \rightarrow d \end{matrix} \; e_1 = \begin{matrix} \rightarrow u \\ \rightarrow u \\ \rightarrow d \end{matrix} \; e_4$$

Thw second equality follows from the fact that there is no significance to the order in which we label the lines. It is because we want to treat the six sets of labels $e_1, \ldots, e_6$ as independent objects that it is useful to consider the case where the three flavors are all different, as in the s-u-d sector.

Let us now denote the six linear combinations of $e_1, \ldots, e_6$ which appear in Eq. (5) (ignoring the flavor labels) by

$$e_D, \quad e_{\bar{S}}, \quad e_{\Sigma_a}, \quad e_{\Lambda_a}, \quad e_{\Sigma_b}, \quad e_{\Lambda_b}$$

Thus, for example, the third and fourth lines in Eq. (5), read

$$|\Sigma_a\rangle = \begin{matrix} \rightarrow s \\ \rightarrow u \\ \rightarrow d \end{matrix} \; e_{\Sigma_a} \qquad \text{and} \qquad |\Lambda_a\rangle = \begin{matrix} \rightarrow s \\ \rightarrow u \\ \rightarrow d \end{matrix} \; e_{\Lambda_a} \tag{6a}$$

furthermore

$$\begin{matrix} \rightarrow u \\ \rightarrow u \\ \rightarrow d \end{matrix} \; e_{\Lambda_a} \equiv \begin{matrix} \rightarrow u \\ \rightarrow u \\ \rightarrow d \end{matrix} \; \frac{1}{2} \begin{bmatrix} \gamma & \beta & \beta & \gamma \\ \alpha + & \alpha - & \gamma - & \beta \\ \beta & \gamma & \alpha & \alpha \end{bmatrix}$$

$$= \begin{matrix} \rightarrow \\ \rightarrow \\ \rightarrow \end{matrix} \; \frac{1}{2} \begin{bmatrix} u & u & d \\ d + & u & - 2\, u \\ u & d & u \end{bmatrix} \begin{matrix} \alpha \\ \beta \\ \gamma \end{matrix} \tag{6b}$$

The last line we recognize as being proportional to the proton state of the octet 8_a. Since there is only one such state, the states written, for example, as $\begin{matrix} \rightarrow u \\ \rightarrow u \\ \rightarrow d \end{matrix} \; e_{\Sigma_a}$ or as $\begin{matrix} \rightarrow u \\ \rightarrow d \\ \rightarrow u \end{matrix} \; e_{\Lambda_a}$ are also proportional to this same state. Some other examples are:

$$\begin{matrix} \rightarrow u \\ \rightarrow s \\ \rightarrow d \end{matrix} \; e_{\Sigma_a} = -\frac{1}{2}|\Sigma_a\rangle - \frac{\sqrt{3}}{2}|\Lambda_a\rangle$$

$$\begin{matrix} \rightarrow s \\ \rightarrow d \\ \rightarrow u \end{matrix} \; e_{\Lambda_a} = -|\Lambda_a\rangle \tag{6c}$$

$$\begin{matrix} \rightarrow u \\ \rightarrow u \\ \rightarrow u \end{matrix} \; e_{\Sigma_a} = 0.$$

We emphasize that e_{Σ_a} represents a spin-location state. To define a physical state we have to specify the flavors q_1, q_2, q_3. Only when we choose $(q_1, q_2, q_3) = (s, u, d)$ e_{Σ_a} actually represents the physical state $|\Sigma_a\rangle$.

All the 27 states $\begin{matrix} \rightarrow q_1 \\ \rightarrow q_2 \\ \rightarrow q_3 \end{matrix}$ e_{Σ_a} (q_i = s, u, d) are either zero (if all the flavors are the same) or in the octet 8_a. The states we get this way form an (over-complete) basis of the octet, although we have used only e_{Σ_a}.

It is straightforward to show that a sum over a complete set of states of the octet, can be performed as follows:

$$\sum_{q_1, q_2, q_3} \left| \begin{matrix} \rightarrow q_1 \\ \rightarrow q_2 \\ \rightarrow q_3 \end{matrix} \; e_{\Sigma_a} \right\rangle \left\langle e_{\Sigma_a} \; \begin{matrix} q_1 \rightarrow \\ q_2 \rightarrow \\ q_3 \rightarrow \end{matrix} \right| = 3 \sum_{t=1}^{8} |t\rangle\langle t| \qquad (7)$$

where q_i runs over s, u, d and t runs over the states of the octet 8_a. An identical equation holds for the octet 8_b.

III. THE PERMUTATION TWISTS

We wish to consider permutations of the three flavor labels. Suppose, for example, that in Eq. (4) we replaced the labels $\begin{matrix} s \\ u \\ d \end{matrix}$ by $\begin{matrix} u \\ d \\ s \end{matrix}$ while leaving the spin-location labels unchanged. As far as the states are concerned, this would have the same effect as if we left the flavor labels unchanged, but permute in the appropriate way the α, β, γ labels of each one of the six e_i's. This permutation can be represented pictorially as follows: write the indices α, β, γ in the order appropriate for a given e_i just to the right of the twist denoted T_3 in Fig. 1, and then slide the indices along the lines from right to the left. For example, if we start with e_2, we wind up with e_4, which can be written

$$e_4 \equiv \begin{pmatrix} \beta \\ \alpha \\ \gamma \end{pmatrix} =$$

$$\begin{pmatrix} \alpha \\ \gamma \\ \beta \end{pmatrix}$$

This relation corresponds to the equation $\begin{matrix} u \\ d \\ s \end{matrix}\ e_2 = \begin{matrix} s \\ u \\ d \end{matrix}\ e_4$.

At this point we may ignore any specific assignment of flavors, and say that we have represented a particular permutation of three objects, in our example, T_3 as a transformation on the six-dimensional vector space spanned by the basis vectors $e_1, \ldots, e_6$. The other permutations of three objects may likewise be represented, according to the pictures of Fig. 1 (the convention we used in Fig. 1 for labelling the T_i is that $T_i : e_1 \to e_i$). In the basis $e_1, \ldots, e_6$, the operators T_i are represented by 6×6 matrices (this is called the <u>regular</u> matrix representation of the permutation group P_3);

for example:

$$T_2 = \begin{bmatrix} 0 & 1 & 0 & 0 & 0 & 0 \\ 1 & 0 & 0 & 0 & 0 & 0 \\ 0 & 0 & 0 & 0 & 0 & 1 \\ 0 & 0 & 0 & 0 & 1 & 0 \\ 0 & 0 & 0 & 1 & 0 & 0 \\ 0 & 0 & 1 & 0 & 0 & 0 \end{bmatrix} \quad T_3 = \begin{bmatrix} 0 & 0 & 0 & 0 & 1 & 0 \\ 0 & 0 & 0 & 0 & 0 & 1 \\ 1 & 0 & 0 & 0 & 0 & 0 \\ 0 & 1 & 0 & 0 & 0 & 0 \\ 0 & 0 & 1 & 0 & 0 & 0 \\ 0 & 0 & 0 & 1 & 0 & 0 \end{bmatrix}, \quad T_1 = I. \tag{8}$$

Each T_i is an orthogonal matrix, so that $T_i^{-1} = T_i^T$; also, T_1, T_2, T_4, and T_6 are symmetric, while $T_5 = T_3^T$. The product of two twists is again a twist; for example, $T_2 T_4 = T_5$ as depicted in Fig. 2.

Let v be any vector in our six-dimensional space. We have associated the operator T_i acting on v with the picture obtained by placing v to the right of the twist labelled T_i in Fig. 1, and then letting the spin-location indices slide along the lines. The resulting vector is $T_i v$. Consider now the operation which can be pictured by placing v to the <u>left</u> of the twist T_i in Fig. 1, and then letting the spin-location indices slide along the lines from left to right. This clearly corresponds to the operator T_i^{-1} acting on v (e. g., the permutation defined by using T_5 in Fig. 1 from left to right, is identical to using $T_3 = T_5^{-1}$ from right to left). Since $T_i^{-1} = T_i^T$, and since $T_i^T v = v\, T_i$ (on the r.h.s. v is understood to be a row vector), we conclude that the picture of v to the left of twist T_i in Fig. 1 is described algebraically as $v\, T_i$, just as the picture of v to the right

of twist T_i is described as $T_i v$.

The T_i operators are related to flavor permutations. The operator T_2, for example ($e_1 \leftrightarrow e_2$, $e_3 \leftrightarrow e_6$, $e_4 \leftrightarrow e_5$) does not interchange β and γ. In fact, there is no permutation of the 3 spin-location labels α, β, γ, which correspond to T_2. However, if we consider the baryon state $\begin{matrix} \rightarrow q_1 \\ \rightarrow q_2 \\ \rightarrow q_3 \end{matrix}$ e_1, T_2 corresponds to the flavor permutation $q_2 \leftrightarrow q_3$. Since each T_i corresponds to a flavor permutation, it is clear that the twist operators are closely related to the $SU(N_f)$ operators.

Our six-dimensional basis $e_1,\ldots,e_6$ corresponds to a reducible representation of the permutation group P_3. We now want to break it into its irreducible representations. It turns out that the six vectors of Eq. (5) (where we ignore the flavor indices) form a new basis that achieves the desired decomposition. There are two one-dimensional representations: e_D is the basis for the symmetric one, and e_S for the antisymmetric one. The T_i, when reduced to these representations, become the following 1 x 1 matrices:

$$\begin{aligned} &e_D \ \text{(Decuplet for } N_f = 3) && T_i = +1 \\ &e_S \ \text{(Singlet for } N_f = 3) && T_i = -(-1)^i \ . \end{aligned} \qquad (9)$$

e_{Σ_a} and e_{Λ_a} are the basis of a (mixed symmetry) two dimensional representation. When the T_i act on e_{Σ_a} or e_{Λ_a}, the resulting vector is a linear combination of them. Therefore, we now define $e_{\Sigma_a} = [1,0]$ and $e_{\Lambda_a} = [0,1]$ and the T_i become the following 2 x 2 matrices:

$$T_1 = \begin{bmatrix} 1 & 0 \\ 0 & 1 \end{bmatrix} \qquad T_2 = \begin{bmatrix} 1 & 0 \\ 0 & -1 \end{bmatrix} \qquad T_3 = \frac{1}{2}\begin{bmatrix} -1 & \sqrt{3} \\ -\sqrt{3} & -1 \end{bmatrix}$$

$$T_4 = \frac{1}{2}\begin{bmatrix} -1 & -\sqrt{3} \\ -\sqrt{3} & 1 \end{bmatrix} \qquad T_5 = \frac{1}{2}\begin{bmatrix} -1 & -\sqrt{3} \\ \sqrt{3} & -1 \end{bmatrix} \qquad T_6 = \frac{1}{2}\begin{bmatrix} -1 & \sqrt{3} \\ \sqrt{3} & 1 \end{bmatrix}. \qquad (10)$$

The matrix T_2 is diagonal, since our basis states are chosen to be of definite symmetry under $q_2 \leftrightarrow q_3$ (namely, if we choose $(q_1,q_2,q_3) = (s,u,d)$ we get eigenstates of isospin).

e_{Σ_b} and e_{Λ_b} are the basis of a two dimensional representation. The matrix representation of the T_i in this basis is identical to that of Eq. (10). This means that $(e_{\Sigma_a}, e_{\Lambda_a})$ and $(e_{\Sigma_b}, e_{\Lambda_b})$ are actually in the same irreducible representation of the permutation group.

Originally, we have used the 6 vectors of Eq. (5) to write down states which are in (the s-u-d sector of) the $SU(N_f)$ irreducible representations. We now observe that there is a one to one correspondence between these states and the states of the irreducible representations of the permutation group. The fact that we got two copies of the same representation of the permutation group, corresponds to the fact that both $(|\Sigma_a\rangle, |\Lambda_a\rangle)$ and $(|\Sigma_b\rangle, |\Lambda_b\rangle)$ are in the same (octet) representation of $SU(3)$.

Any arbitrary octet is characterized in principle by two spin-location states e_Σ and e_Λ, which transform under the 6 permutation operators as in Eq. (10). This guarantees that Eqs. (6a,b,c) still hold. Since the behavior under the permutation operators is all the information we need, we do not have to know anything about the details

of the spin-location states, and the indices a and b (in e_{Σ_a}, for example) can be suppressed.

We have used as a convenient example the case $N_f = 3$. But the same spin-location states (as in Eq. (5)), the same operators T_i and the same irreducible representations [as in Eqs. (9,10)] can be used for arbitrary N_f.

For $N_f > 3$, the baryon $SU(N_f)$ multiplets become larger (and hence are no longer called singlet, octet and decuplet) but they remain the same in number, and they still correspond to the irreducible representations of P_3 in the same way. For example, for $N_f = 4$ we get an (over-complete) description of the mix symmetry multiplet (which contains the SU(3) octet) by letting q_1, q_2, q_3 run (independently) over u,d,s and c in front of the spin-location states e_Σ and e_Λ (This multiplet is now 20-dimensional, because there are two states for each of the 4 sectors of the s-u-d type and one state for each of the 12 sectors of the u-u-d type). We get all the 20 states of the symmetric representation, and the 4 states of the antisymmetric by using as above $e_D(e_S)$.

For $N_f = 2$, we use the same spin-location states, and let q_1, q_2, q_3 run over u and d. The mix-symmetry representation contains two states ($I = \frac{1}{2}$) and the symmetric representation contains four states ($I = \frac{3}{2}$). All the states of the antisymmetric representation, vanish.

To generalize our scheme to any arbitrary value of N_c, we start with the $N_c!$ different spin-location states, $e_1, \ldots, e_{N_c!}$ which correspond to all the permutations of the $N_c!$ labels $\alpha_1, \ldots, \alpha_{N_c!}$. We define the $N_c!$ twist operators, and construct a

new basis of the e_i (similar to $e_D, \ldots, e_{\Lambda_b}$) which corresponds to the irreducible representations of the permutation group for N_c objects. By letting $q_1, \ldots, q_{N_c}$ run over all N_f flavors in front of the new spin-location states, we get all the $SU(N_f)$ representations of N_c quarks.

IV. THE BARYON-BARYON-MESON VERTEX

We wish to calculate the baryon-baryon-meson vertex with specific twists on the baryons; some examples are shown in Fig. 3. Our method will be to observe that, although in general there may be more than one way to attach the meson quark-lines to the baryon quark-lines (see Figs. 3a and b), if both baryons have the flavors s-u-d there will be only one way to hook in the meson (as in Fig. 3c). This means that the vertex of Fig. 3c can be directly related to a physical coupling. (This coupling may of course be off shell; we use the term physical coupling to mean one which is defined on the particle-diagram level.) We can now use $SU(N_f)$ symmetry to define all of the vertices; for example, the vertex in Fig. 3a will be equal to that in Fig. 3c. For $N_f < 3$ this procedure does not work; in this case, we can still define quark-diagrams, but the definition is not unique (whereas for $N_f \geq 3$ it is unique). However, when we sum over all quark-diagrams to obtain physical amplitudes, we get a unique result for any value of N_f.

Consider the baryon-baryon-meson (BBM) vertex of Fig 4a. Baryons (mesons) are indicated by solid (dashed) lines. We first specify the multiplets of the three hadrons. The letter A specifies the $SU(N_f)$ multiplet of the baryon on the left (1, 8, or 10 for $N_f = 3$), <u>and</u> if this baryon is, for example, an octet, A tells us which specific octet it is (e.g. the nucleon octet, the N(1470) octet, etc.), but not which specific member of the octet (e. g. the Σ^+, Λ, or p). In order to give this latter information, we represent the baryon by three quark lines and specify both the three flavors and a two dimensional spin-location vector which we call $[L]$ (which

can be a linear combination of e_Σ and e_Λ, and which distinguishes between a Σ and a Λ in the s-u-d sector according to Eq. (6a) [where the index a is suppressed]).

The meson is always in a nonet, and the letter F specifies the nonet (for example: the ω-ρ-ϕ nonet). F does not specify the member of the nonet; this is done by representing the meson by quark-antiquark lines, and specifying their flavors.

Let us consider first the case in which both baryons are octets. To simplify the notation, we denote the members of the octet, by the name of the particles in the nucleon octet (Σ means Σ^0). Obviously, the two octets in the vertex can be different. The members of the meson nonet are denoted by the names of the particles in the ρ-nonet. We start with the s-u-d sector for both baryons. In the standard order, $\begin{matrix} s \rightarrow \\ u \rightarrow \\ d \rightarrow \end{matrix}$, $[L] = [1,0]$ is the Σ and $[0,1]$ is the Λ for the left baryon. We describe the baryon B on the right with a similar spin-location vector, which we call $[R]$. If the meson is of the ϕ type ($s\bar{s}$), then the vertex is described by Fig. 4b. We represent this vertex by the quark diagram of Fig. 4c. We define $V_{\Sigma\Sigma}$ to be this vertex function for $[L] = [1\ 0]$ and $[R] = \begin{bmatrix}1\\0\end{bmatrix}$. Note that this quantity is defined in terms of a physical coupling, the $\Sigma\Sigma\phi$ coupling of multiplets A,B and F. In principle we should write $V^{AFB}_{\Sigma\Sigma}$, but we shall suppress the multiplet indices for the time being. In the same way, $V_{\Lambda\Lambda}$ is defined to be the vertex of Fig. 4b for $[L] = [0\ 1]$ and $[R] = \begin{bmatrix}0\\1\end{bmatrix}$ and it is just the $\Lambda\Lambda\phi$ coupling for the A,B,F multiplets. For $[L] = [1\ 0]$ and $[R] = \begin{bmatrix}0\\1\end{bmatrix}$ we get $V_{\Sigma\Lambda} = 0 = V_{\Lambda\Sigma}$ by isospin conservation.

We now define the 2 x 2 vertex matrix for A,B and F (where A and B are still octets) as follows:

$$\text{(octet-octet)} \qquad V = \begin{bmatrix} V_{\Sigma\Sigma} & 0 \\ 0 & V_{\Lambda\Lambda} \end{bmatrix} . \tag{11}$$

For any arbitrary states in the s-u-d sector of A and B, $[\,L\,]$ and $\left[R\right]$ (these are linear combinations of Σ and Λ) we get:

$$\text{Vertex of Fig. 4} = [\,L\,]\, V \left[R\right] . \tag{12}$$

Suppose we now take states labelled u-s-d, as in Fig. 5, rather than in the standard order s-u-d. That is, the baryon on the right is in the state $\begin{matrix} \rightarrow u \\ \rightarrow s \\ \rightarrow d \end{matrix} \left[R\right]$. To get to the standard order, we twist the top two quarks; that is, we use

$$\begin{matrix} \rightarrow u \\ \rightarrow s \\ \rightarrow d \end{matrix} \left[R\right] = \begin{matrix} \rightarrow s \\ \rightarrow u \\ \rightarrow d \end{matrix} \; T_4 \left[R\right] \tag{13}$$

where T_4 is given in Eq. (10). Similarly, the state on the left, $[\,L\,] \begin{matrix} u \rightarrow \\ s \rightarrow \\ d \rightarrow \end{matrix}$, can be rewritten as $[\,L\,]\, T_4 \begin{matrix} s \rightarrow \\ u \rightarrow \\ d \rightarrow \end{matrix}$. Having written the flavors in the standard order, we can apply Eq. 12 to conclude

$$\text{Vertex of Fig. 5a} = [\,L\,] T_4\, V\, T_4 \left[R\right] \tag{14}$$

The corresponding diagram is Fig. 5b. The meson is emitted from the upper quark line, and the appropriate twists are introduced in the propagators. By $SU(N_f)$ symmetry it is clear that the vertex

we have just discussed (Fig. 5b) is equal to the vertex of Fig. 5c in which the flavors of the baryons are in the standard order, but the meson is of the $u\bar{u}$ type : $1/\sqrt{2}\,(\rho^0 + \omega)$.

We now leave the s-u-d sector and take a uud state as in Fig. 6a. The vertex-amplitude has two components, because the top quark can now go either to the meson or to the other baryon. (Note that the concept of a top quark is well defined because the flavor configuration of Fig. 6a is associated with a state, $[\,L\,]$. When we look, for example at the term $\begin{pmatrix} \alpha \\ \beta \\ \gamma \end{pmatrix}$, the top quark is just the quark which is in the state α.). Each one of these two components is equal to a corresponding physical vertex, in which the baryons are in the s-u-d sector, as shown in Fig. 6 (as long as we use the same $[\,L\,]$ and $\left[R\right]$ vectors). The expression for Fig. 6a is therefore

$$[\,L\,] T_1\, V\, T_1 \left[R\right] + [\,L\,] T_4\, V\, T_1 \left[R\right] .$$

The rule for any arbitrary flavor assignment for the quark lines, and for any two states $[\,L\,]$ and $\left[R\right]$ is

$$\text{Vertex} = \sum_{i,j}{}' \; [\,L\,] T_i\, V\, T_j \left[R\right] \tag{15}$$

The prime indicates two things:

(a) The sum is only over pairs of twists which are consistent with the flavor assignment. This means that out of the 36 possible pairs, we take only those whose diagrammatic representation is such that each quark line connects two

identical flavors. In other words: Flavor flows continuously in the vertex. For example, the term $T_2 T_1$ does not contribute to Fig. 5a. If the vertex is forbidden by some additive quantum number of $SU(N_f)$, we cannot draw any quark diagram for the vertex, and no term contributes to the sum.

(b) Since each allowed diagram appears twice in the sum in (15), take only half the terms. For any (i,j) term in the sum, consider the term (i',j'), where $T_i' = T_i T_2$ and $T_j' = T_2 T_j$. These are indeed different terms, since $T_i' = T_i T_2$ implies $i \neq i'$). These two terms represent the same diagram; for example, Fig. 7a shows the $T_1 T_1$ term and Fig. 7b the $T_2 T_2$ term, and it is clear that these are the same diagram drawn in two different ways. In fact, we have already related the diagram in Fig. 7a to physical couplings. Of course the pair of terms (i,j) and (i',j') related as above have the same value; formally, this is guaranteed by the fact that

$$V = T_2 V T_2 \tag{16}$$

Therefore we take either member of the pair in the sum in (15). Alternatively, we could take all terms allowed by the flavor assignment, and then multiply the sum by 1/2.

The reader will observe that we have succeeded in describing the coupling of two baryon octets to a meson nonet in terms of two parameters ($V_{\Sigma\Sigma}$ and $V_{\Lambda\Lambda}$), while SU(3) invariance by itself would allow three independent couplings (888_F, 888_D, 881). The reason is

that we have not included any vertex diagram in which the quark and antiquark from the meson annihilate each other, in order that the theory respect the baryon analogue of the OZI rule at the tree level.

It is straightforward to generalize Eq. (15) to any other kind of multiplet. Consider the case where A and B are both decuplets. The s-u-d sector contains only one state (denoted by D), and therefore the $[\,L\,]$ and $\begin{bmatrix} R \end{bmatrix}$ vectors are in fact the one dimensional vector $[1]$. The vertex function V_{DD} is defined in terms of Fig. 4 and is equal to the physical vertex $DD\phi$. The vertex matrix V is a 1 x 1 matrix, whose single element is V_{DD}. The twist operators, T_i, are 1 x 1 matrices, and $T_i = 1$ (See Eq. (9)). Eq. (15) still holds, and the prime has the same meaning.

If A and B are both singlets, we define V_{SS} in the same way, and V and T_i are 1 x 1 matrices. The T_i are given in Eq. (9). If A is a singlet and B is a decuplet, then $V = 0$.

If A is an octet, and B is a decuplet, we use again Fig. 4 to define $V_{\Sigma D}$ in terms of the physical vertex $\Sigma D\phi$. $V_{\Lambda D} = 0$ because of isospin conservation. We construct a 2 x 1 matrix

$$\text{(octet-decuplet)} \quad V = \begin{bmatrix} V_{\Sigma D} \\ 0 \end{bmatrix}$$

The rules of Eq. (15) are unchanged. The T_i on the left of V in Eq. (15) is now a 2 x 2 matrix and $[\,L\,]$ is a 2-vector, whereas the T_j on the right, and the $\begin{bmatrix} R \end{bmatrix}$ vector are one-dimensional. If A is a decuplet, and B is an octet, V is the 1 x 2 matrix

$$\text{(decuplet-octet)} \quad V = \begin{bmatrix} V_{D\Sigma}, & 0 \end{bmatrix} .$$

In a similar way we get

$$\text{(octet-singlet)} \quad V = \begin{bmatrix} 0 \\ V_{\Lambda S} \end{bmatrix} \qquad \text{(singlet-octet)} \quad V = \begin{bmatrix} 0, & V_{S\Lambda} \end{bmatrix} .$$

In conclusion, for any two baryon multiplets A and B we construct an $m \times n$ matrix V, where $m(n)$ is the number of states in the s-u-d sector of $A(B)$. In Eq. (15) the T matrix and the vector to the left (right) of V is of dimension $m(n)$. Our choice of states in the s-u-d sector is such that all of them are either symmetric in the middle and bottom lines $(I = 1 : \Sigma, D)$ or antisymmetric $(I = 0 : \Lambda, S)$. The matrix elements of V which connect states of different symmetry, vanish.

The approach of this paper is to proceed as if the dynamics, on the particle level, were fully known. We thus assume that the spin and mass of the hadrons (and therefore their propagators) and their couplings are given. The complete dynamical information is contained in the particle-diagrams. Our purpose in this paper is to define all quark-diagrams in terms of these particle-diagrams. In this section we have accomplished the first step towards this goal: we have constructed vertex matrices in terms of physical couplings, which are measurable in principle, and used them to define all the quark-diagram components of the vertex (the various terms of Eq. (15)). The vertex matrices are uniquely defined only for $N_f \geq N_c$. For $N_f < N_c$, the definition of quark-diagrams is therefore not unique. However, when we sum them according to Eq. (15) to get the physical amplitude, all the ambiguities disappear and we get the right answer.

V. QUARK DIAGRAMS

a. A Simple Example

Let us start with a simple example. Consider the particle-diagram of Fig. 8a. The baryon and meson multiplets are specified as before. External and internal particles are specified in the same way. Let A, X and B be octets (the generalization to decuplets or singlets is trivial; the only change is in the dimensions of the appropriate V and T matrices, and of the state vectors). We now have to specify which member of the multiplet each external particle is. This is done in Fig. 8b. Note that this specification for a baryon octet is not unique; the same state of A could be described, for example, as $[\,L'\,]\begin{matrix} u\rightarrow \\ s\rightarrow \\ d\rightarrow \end{matrix}$ where $[\,L'\,] = [\,L\,]T_4$. Obviously, the results of any calculation are independent of the way we specify the external baryons.

We are now interested in the contribution of a single multiplet, X, to the amplitude (In Sec. VIa we shall sum over all possible multiplets in the internal particle lines.). Obviously, we have to sum over all possible states of the multiplet X. In the present example, only the s-u-d sector contributes, namely the Σ and Λ states of the multiplet X. Therefore, we have to insert for the X propagator the following expression:

$$|\Sigma\rangle P_X \langle\Sigma| + |\Lambda\rangle P_X \langle\Lambda| \tag{17}$$

P_X is the propagator of X. Due to $SU(N_f)$ invariance, the propagators of all the members of the same multiplet are equal.

A (non-unique) way to represent the completeness sum of Eq. (17) is

$$\left\{ \left| \begin{matrix} \rightarrow s \\ \rightarrow u \\ \rightarrow d \end{matrix} \begin{bmatrix} 1 \\ 0 \end{bmatrix} \right\rangle \left\langle [1 \quad 0] \begin{matrix} s\rightarrow \\ u\rightarrow \\ d\rightarrow \end{matrix} \right| + \left| \begin{matrix} \rightarrow s \\ \rightarrow u \\ \rightarrow d \end{matrix} \begin{bmatrix} 0 \\ 1 \end{bmatrix} \right\rangle \left\langle [0 \quad 1] \begin{matrix} s\rightarrow \\ u\rightarrow \\ d\rightarrow \end{matrix} \right| \right\} P_X . \tag{18}$$

The contribution of the first term is described in Fig. 9c. Now we have in the internal line a single state (the Σ member of the X octet in a given spin-momentum state), and therefore the amplitude factorizes, and we are left with the problem of computing the two vertices. According to our rules, the amplitude is

$$\text{Fig. 8c (the } |\Sigma\rangle\langle\Sigma| \text{ term)} = [\,L\,]T_4\, V^{AFX}\, T_4 \begin{bmatrix} 1 \\ 0 \end{bmatrix} [1 \quad 0]\, T_6\, V^{XGB} T_6 \begin{bmatrix} R \end{bmatrix} P_X . \tag{19}$$

The $|\Lambda\rangle\langle\Lambda|$ term will be the same, except for a $\begin{bmatrix} 0 \\ 1 \end{bmatrix}[0 \quad 1]$ term. Using

$$\begin{bmatrix} 1 \\ 0 \end{bmatrix}[1 \quad 0] + \begin{bmatrix} 0 \\ 1 \end{bmatrix}[0 \quad 1] = \begin{bmatrix} 1 & 0 \\ 0 & 1 \end{bmatrix} = I \tag{20}$$

we get for the full amplitude, A^{AXB}, of Fig. 8a

$$A^{AXB} = [\,L\,]T_4\, V^{AFX}\, T_4\, T_6\, V^{XGB}\, T_6 \begin{bmatrix} R \end{bmatrix} P_x \tag{21}$$

We now use $T_4\, T_6 = T_5$. Instead of having two twists on the propagator, we now have only one, and the final result, which is represented in Fig. 8d is

$$A^{AXB}_{4,5,6} = [\,L\,]\, T_4\, V^{AFX}\, T_5\, V^{XGB}\, T_6 \begin{bmatrix} R \end{bmatrix} P_x \tag{22}$$

b. The General Case

We wish to obtain an expression for an arbitrarily complicated quark diagram. Our strategy shall be to start with an arbitrary particle diagram, and decompose it into a sum of terms, each of which will correspond to a quark diagram. We will thus achieve both an expression for an arbitrary quark diagram and also a determination of precisely how and with what weighting factors to add together the various quark diagrams to compute physical amplitudes.

We consider then a particle diagram of arbitrary complexity, which may be planar or non-planar; we do, however, restrict ourselves to diagrams all of whose vertices are of the type BBM and MMM. We first fix the multiplets of all the hadrons in the particle diagram. The sum over all the multiplets that can be exchanged in internal lines will be carried out in Sec. 6a. Each external particle is designated to be a specific member of the corresponding multiplet, whereas for each internal particle we have to sum over all members. We assume that all mesons are in N_f^2-multiplets. The charge-conjugation of (the neutral members of) each meson multiplet is specified.

Any baryon line either connects two external particles (in which case we call it an <u>open</u> baryon line) or forms a baryon loop (which we call a <u>closed</u> baryon line). Each baryon line, open or closed, carries an arrow that indicates the direction of flow of baryon number; that is, the line carries baryon number +1 in the direction of the arrow, so that, for example, an external particle whose baryon-number arrow points into the diagram is an incoming baryon if $E > 0$, and an outgoing anti-baryon if $E < 0$.

We now sum over all members of the multiplets in the internal lines. In the example discussed above (Fig. 8), we knew the octet particle X had the flavors s-u-d, so we used Eq. 18. In the general case, we use, for any baryon octet, an alternative form of Eq. 7:

$$\sum_{t=1}^{8} |t\rangle\langle t| = \frac{1}{6} \sum_{q_1 q_2 q_3} \left\{ \left| \begin{matrix} \rightarrow q_1 \\ \rightarrow q_2 \\ \rightarrow q_3 \end{matrix} \begin{bmatrix} 1 \\ 0 \end{bmatrix} \right\rangle \left\langle \begin{matrix} [1\ 0] & q_1 \rightarrow \\ & q_2 \rightarrow \\ & q_3 \rightarrow \end{matrix} \right| + \left| \begin{matrix} \rightarrow q_1 \\ \rightarrow q_2 \\ \rightarrow q_3 \end{matrix} \begin{bmatrix} 0 \\ 1 \end{bmatrix} \right\rangle \left\langle \begin{matrix} [0\ 1] & q_1 \rightarrow \\ & q_2 \rightarrow \\ & q_3 \rightarrow \end{matrix} \right| \right\} . \tag{23}$$

It is easy to check that for the decuplet

$$\sum_{t=1}^{10} |t\rangle\langle t| = \frac{1}{6} \sum_{q_1 q_2 q_3} \left| \begin{matrix} \rightarrow q_1 \\ \rightarrow q_2 \\ \rightarrow q_3 \end{matrix} \; e_D \right\rangle \left\langle e_D \; \begin{matrix} q_1 \rightarrow \\ q_2 \rightarrow \\ q_3 \rightarrow \end{matrix} \right| \tag{24}$$

and that for the baryon singlet

$$|t\rangle\langle t| = \frac{1}{6} \sum_{q_1 q_2 q_3} \left| \begin{matrix} \rightarrow q_1 \\ \rightarrow q_2 \\ \rightarrow q_3 \end{matrix} \; e_S \right\rangle \left\langle e_S \; \begin{matrix} q_1 \rightarrow \\ q_2 \rightarrow \\ q_3 \rightarrow \end{matrix} \right| ; \tag{25}$$

e_D and e_S are defined just before Eq. (6a). Eqs. (23),(24), and (25) are written for the case $N_f = 3$; for any other value of N_f, the right hand sides of these equations would be unchanged (including the factors of 1/6), and will contain N_f^3 terms while on the left the sum would be over the appropriate number of states.

For meson propagators, we use:

$$\sum_{t=1}^{N_f^2} |t\rangle\langle t| = \sum_{q_1,q_2} \left| \begin{matrix} \leftarrow \\ \rightarrow \end{matrix} \begin{matrix} q_1 \\ q_2 \end{matrix} \rangle\langle \begin{matrix} q_1 \\ q_2 \end{matrix} \begin{matrix} \leftarrow \\ \rightarrow \end{matrix} \right| \qquad (26)$$

where the r. h. s. contains N_f^2 terms.

We now have $(N_f^3)^b(N_f^2)^m$ terms, where b(m) is the number of baryon (meson) propagators. For each term, the quark labelling for each quark line of the diagram is specified. For the external particles it was specified at the beginning, and for the internal particles it is specified by the choice of term in the sums (23) - (26). The contribution of each term can be now written in the usual way as a product of propagators and vertex functions.

We have seen in Sec. IV how to calculate the the BBM vertices and shall deal with them below. In case of an MMM vertex, the situation is exactly as it was in the meson sector (see Ref. 5). If all the six flavors are the same (e. g. all the three mesons are of the $u\bar{u}$ type) the vertex has two components as is shown in Fig. 9. We denote the three mesons by F, G, and H, and associate with them an arbitrary cyclic order, say F, G, H. The term in which the quark lines flow in this order (the incoming arrow of F goes to G) is called V_1. The second term is V_2. The relation[5] between these two components of the MMM vertex is

$$V_2 = C_F C_G C_H V_1 \quad . \qquad (27)$$

where C_F, for example, is the charge-conjugation of the $q_i\bar{q}_i$ members of the multiplet F. In case that all flavors are the same, the vertex is given by $V = V_1 + V_2$ (which is zero if the vertex is forbidden by c.c. Nevertheless, we have to take into account such contributions, because the V_1 and V_2 components contribute to

different quark diagrams.). The general rule is that a vertex component will contribute only if it is consistent with the flavor assignment of the three mesons. Once it contributes, it always has the same value (V_1 or V_2), independently of the flavor assignment, as is required by $SU(N_f)$ symmetry. It should be emphasized that by an appropriate choice of the flavor assignment, both V_1 and V_2 can be defined in terms of physical vertices. V_1, for example is just the vertex of $F(u\bar{d})\, G(s\bar{u})\, H(d\bar{s})$ where $\bar{q}$ is the line with the outgoing arrow.

To calculate the BBM vertices, it is useful to draw the baryon lines in a standard way. This can be done as follows: draw first all the baryon lines (open and closed) on a plane, such that they will not cross each other. For any given baryon line let all mesons which are connected to that baryon line approach it from the same side (e. g. if an open line is drawn as a straight horizontal line, this means all mesons are attached to the top or all are attached to the bottom; for a closed baryon line it means all to the inside or all to the outside). It does not matter how badly we have to twist the meson lines in the diagram to do this. When we represent the baryon by quark lines, let us call the quark on the meson side the t-quark, the quark on the other side the b-quark, and the quark in the middle the m-quark (in the example discussed above [see Fig 8], the t-quark was on top, and the b-quark on the bottom). We can now apply the rules of Sec. IV, with the understanding that, for example, T_2 interchanges the m and b lines and that a Σ can be represented as $\begin{matrix} s \\ u \\ d \end{matrix} e_\Sigma$, meaning that s goes with the t-quark, u with the m-quark,

and d with the b-quark, and e_Σ is given in terms of $e_1,\ldots,e_6$ exactly as on the third line of Eq.(5), where e_1 represents α on the t-quark, β on the m-quark and γ on the b-quark, etc. If we define the back and the front of the vertex so that the baryon-number arrow points from the back to the front, and denote by $[\ L\ ]$ ($\left[R\right]$) the baryon state-vector at the back (front) of the vertex, then for each BBM vertex we get a sum exactly as in Eq. (15). It is useful at this point to include <u>all</u> pairs of twists consistent with the flavor assignment, so we must also include a factor of 1/2 for each BBM vertex.

We have now written the amplitude as a multidimensional sum: there is a sum over flavors, from Eqs. (23) - (26); for each assignment of flavors each MMM vertex is the sum of two terms, V_1 and V_2 (one or both of which may vanish for particular flavor assignments), and each BBM vertex is the sum of 36 terms, as in Eq. (15) (some of which may vanish for particular flavor assignments). Let us now interchange the order of summation. We first choose a term characterized by the coice of V_1 or V_2 for each MMM vertex and of T_i and T_j for each BBM vertex. This choice is represented by a quark diagram in an obvious way. We then sum over the flavor terms in the propagators (the flavor assignment for external particles is fixed). For a fixed choice of each V_1 or V_2 and of the T's, only those terms in the flavor sum will contribute in which flavor flows continuously in every quark line of the diagram. For any quark line which connects to an external particle, the flavor is fixed by the specification of the external flavors. For any closed quark loop, the flavor can take any of N_f values, but it must be the same all

around the loop. Thus for each loop, we have to sum N_f terms; according to our rules, all these N_f terms have an identical amplitude. Therefore each quark loop contributes a factor of N_f.

This factor of N_f, which is familiar from the meson sector, is actually quite surprising here. Consider for example the diagram in Fig. 10a; suppose the internal baryon has been specified to be an SU(3) singlet. Since the only state of the singlet is the s-u-d sector, it would seem that the quark line going around the loop <u>must</u> have the flavor s, so that we should not sum over the u and d flavors for this line, and so not obtain a factor of N_f. The resolution to this apparent paradox is discussed in Section VIc.

We now further simplify our expression for the quark diagram. For each BBM vertex, we have an expression of the form $[\ L\ ]T_i\ V\ T_j\left[R\right]$, where each matrix and vector is of the appropriate dimension. We can multiply these expressions along any given baryon line, using Eq. (20) for octets. We then obtain, for any open baryon line, the expression

$$[\ L\ ]T_i\ V\ T_j\ T_k\ V\ T_\ell \ldots T_m\ V\ T_n\left[R\right] \tag{28}$$

where the T's and V's are written in the order they appear along the baryon line, going from back to front; the vectors $[\ L\ ]$ and $\left[R\right]$ now refer to external states. For a closed baryon line, the expression is

$$\text{Trace}\left[T_i\ V\ T_j\ T_k\ V\ T_\ell \ldots T_m\ V\ T_n\right] \tag{29}$$

In its present form, the amplitude contains two twist matrices per baryon propagator, for example $T_j\, T_k$. We now replace them, both algebraically and diagrammatically by a single twist $T_{(j,k)} = T_j\, T_k$. For each propagator there are exactly six different pairs of $T_j'\, T_k'$ whose product is $T_{(j,k)}$ (namely $(T_j T_i^{-1})(T_i T_k)$, $i = 1,\ldots,6$). If one of them is allowed, they are all allowed, since the quark topology is only determined by the product twist. Since they all have the same contribution we add these six diagrams per propagator and so the 1/6 factor per propagator from Eqs. (23)-(25) disappears. A quark diagram is now completely characterized by specifying the V_k of each MMM vertex ($k = 1,2$), and the T_i of each baryon propagator and of each (external) baryon line ($i = 1,\ldots,6$).

The amplitude for each diagram contains the following factors:

(a) P_X for each propagator

(b) V_k for each MMM vertex

(c) $[\,L\,]T_i\, V\, T_j\, V\, T_k \ldots V\, T_l\, [R]$ for each open baryon line

(d) $\mathrm{Tr}(T_i\, V\, T_j \ldots V)$ for each closed baryon line

(e) N_f per closed loop

The rule for summing quark diagrams is as follows: Make an assignment of external flavors appropriate for a given physical process, and then calculate (using the rules given above) every quark diagram consistent with this flavor assignment. Add the diagrams, with weight $(\frac{1}{2})^n$, where n is the number of BBM vertices. Of course, many of the terms in this sum will be equivalent, because of Eq. (16). A systematic way of taking this fact into account is presented in Sec. VIb.

VI. SOME FURTHER DEVELOPMENTS

a. Summation over Multiplets

It is convenient to adopt a notation in which all of our matrices are of the same dimension. We can use the four-dimensional basis consisting of the vectors e_D, e_Σ, e_Λ, and e_S; that is, for a multiplet A, $[L^A] = [1,0,0,0]$ means A is a decuplet; $[L^A] = [0,0,1,0]$ means the octet state which, if labelled s-u-d, is a Λ etc. (We could have gone back to the original six-dimensional space, but we do not need here two copies of the octet.) The twist operators T_i become 4×4 matrices; for example, T_4 is shown in this basis in Fig. 11b. All of the possible matrix elements of V are shown in Fig. 11a; for specific multiplets A and B, most of the entries in V^{AFB} vanish; for example, for A a decuplet and B an octet, $V^{AFB}_{1,2} = V^{AFB}_{D\Sigma}$, all other $V^{AFB}_{ij} = 0$.

We now wish to separate our expression for quark diagrams into two parts - one of which contains the information from particle diagrams, and the other of which displays the twists. Consider for example the diagram (8d) - we can rewrite Eq. (22) for this diagram as

$$A^{AXB}_{4,5,6} = [L^A]\ T_4\ V^{AFX}\ T_5\ V^{XGB}\ T_6 \left[R^B\right] P_X\ . \tag{30}$$

Equation (22) was originally written for the case where A, X, and B were octets, but Eq. (30) is valid for any multiplets since all of its matrices and vectors are 4-dimensional.

We can now rewrite Eq. (30) as

$$A^{AXB}_{4,5,6} = \sum_{i,j,k,\ell,m,n=1}^{4} [L^A]_i\ T_{4,ij}\ V^{AFX}_{jk}\ T_{5,k\ell}\ V^{XGB}_{\ell m}\ T_{6,mn} \left[R^B\right]_n P_X$$

$$= \sum_{i,j,k,\ell,m,n=1}^{4} T_{4,ij}\ T_{5,k\ell}\ T_{6,mn}\ B^{AXB}_{ijk\ell mn} \tag{31}$$

where we have defined

$$B^{AXB}_{ijk\ell mn} = [L^A]_i\ V^{AFX}_{jk}\ V^{XGB}_{\ell m} \left[R^B\right]_n P_X \tag{32}$$

The amplitude in Eq. (31) represents the contribution of a specific multiplet X; we can now sum over multiplets of all different types (this is especially useful when there is degeneracy between different multiplets):

$$A^{AB}_{4,5,6} \equiv \sum_X A^{AXB}_{4,5,6} = \sum_{i,j,k,\ell,m,n=1}^{4} T_{4,ij}\ T_{5,k\ell}\ T_{6,mn}\ B^{AB}_{ijk\ell mn} \tag{33}$$

where

$$B^{AB}_{ijk\ell mn} = \sum_X B^{AXB}_{ijk\ell mn} \tag{34}$$

The sum over X may represent many multiplets of the same type (e. g. many octets), as well as multiplets of different type (e. g. octets, decuplets and singlets).

We can also let our external states be an arbitrary superposition of multiplets, possibly of many types: let $[L] = \sum_A a_A [L^A]$ and $[R] = \sum_B b_B [R^B]$, where a_A and b_B are arbitrary coefficients. Then

$$A_{4,5,6} \equiv \sum_{A,B} a_A b_B A^{AB}_{4,5,6} = \sum_{i,j,k,\ell,m,n=1}^{4} T_{4,ij} T_{5,k\ell} T_{6,mn} B_{ijk\ell mn} \tag{35}$$

where

$$B_{ijk\ell mn} = \sum_{A,B} a_A b_B B^{AB}_{ijk\ell mn} \tag{36}$$

We note that, although the flavor labels do appear in Fig. 8d, they are completely irrelevant to the definition of $A_{4,5,6}$ in Eq. (35).

The indices of B are displayed in Fig. 12a. Each baryon propagator and external line has two indices (which are contracted with the corresponding T matrix in Eq. (35)); the two indices next to each vertex come from the corresponding V matrix in Eq. (32). B will be non-zero only if the two indices of any propagator belong to the same representation and if the two indices of any vertex correspond to the same symmetry in the middle and bottom lines. Figs. 12b,c,d display respectively B_{112344}, B_{122344}, and B_{113344}. The latter two vanish, B_{122344} because a twist cannot couple indices 1 and 2, and B_{113344} because a vertex cannot couple indices 1 and 3. In fact, for $i = 1$ and $n = 4$ (where i and n are the first and last indices) B_{112344} is the only non-zero entry.

As another example, consider the baryon loop diagram in Fig. 13.

We write

$$A_{3,4} = \sum_{X,Y} \mathrm{Tr}\left(T_3 V^{XFY} T_4 V^{YGX}\right) P_X P_Y$$
$$= \sum_{i,j,k,\ell} T_{3,ij} T_{4,k\ell} B_{jk\ell i} \tag{37}$$

where

$$B_{jk\ell i} = \sum_{X,Y} V^{XFY}_{jk} V^{YGX}_{\ell i} P_X P_Y$$

Comparing Eqs. (35) with (37) we observe that the final expression for constructing the A amplitudes in terms of the B's, in the case of a closed baryon line, is identical to the expression for an open baryon line, provided the number of (internal and external) baryon propagators are the same.

For the most general diagram, we make a specific choice of V_k $(k = 1,2)$ for the MMM vertices and fix all meson multiplets. Then we sum over all possible baryon multiplets to define the $B_{ij\cdots}$ amplitudes. These B amplitudes represent all the information we need from particle diagrams; the A amplitudes represent the quark diagrams.

Because of Eq. 16 (which is still valid in the 4-dimensional notation), many of the A amplitudes, labelled by different twist indices, are identical; for example, $A_{4,5,6}$, $A_{3,4,6}$, $A_{4,6,3}$, and $A_{3,3,3}$ are identical. It can be shown that, once the meson vertices are all specified, the number of different A amplitudes is the product of 6×3^n for each open baryon line and $3^n + 1$ for each closed baryon line, where n is the number of BBM vertices along that line. (Of course with a particular choice of external

flavors not all of these must contribute). Furthermore, for $N_f \geq 3$ the number of non zero B amplitudes is equal to the number of A amplitudes. Therefore, Eq. (35), for example, is a transformation from one complete set of amplitudes (the B's) to another (the A's).

As an illustration, we shall display the transformation between the A- and B- amplitudes for the simplest baryon diagram, the baryon propagator. There are six B amplitudes: B_{11}, B_{22}, B_{33}, B_{44}, B_{23}, and B_{32}, which for this discussion we re-label as (D for decuplet, S for singlet) B_{DD}, $B_{\Sigma\Sigma}$, $B_{\Lambda\Lambda}$, B_{SS}, $B_{\Sigma\Lambda}$, $B_{\Lambda\Sigma}$ ($B_{\Sigma\Lambda} \neq 0$ does not imply that a Σ can propagate to a Λ; the spin-location state e_Σ, for example, describes a Σ state only if it is accompanied by the standard flavor labelling $\begin{smallmatrix} s \\ u \\ d \end{smallmatrix}$.). There are six A amplitudes, $A_1 \ldots A_6$, which are displayed in Fig. 1. We have

$$A_i = \sum_{s,t=1}^{4} T_{i,st} \, B_{st} \tag{38}$$

We now have the following transformation from the B to the A

$$\begin{bmatrix} A_1 \\ A_2 \\ A_3 \\ A_4 \\ A_5 \\ A_6 \end{bmatrix} = \begin{bmatrix} 1 & 1 & 1 & 1 & 0 & 0 \\ 1 & -1 & 1 & -1 & 0 & 0 \\ 1 & 1 & -1/2 & -1/2 & \sqrt{3}/2 & -\sqrt{3}/2 \\ 1 & -1 & -1/2 & 1/2 & -\sqrt{3}/2 & -\sqrt{3}/2 \\ 1 & 1 & -1/2 & -1/2 & -\sqrt{3}/2 & \sqrt{3}/2 \\ 1 & -1 & -1/2 & 1/2 & \sqrt{3}/2 & \sqrt{3}/2 \end{bmatrix} \begin{bmatrix} B_{DD} \\ B_{SS} \\ B_{\Sigma\Sigma} \\ B_{\Lambda\Lambda} \\ B_{\Sigma\Lambda} \\ B_{\Lambda\Sigma} \end{bmatrix}$$

This paper was mainly devoted to constructing transformations of this type, from particle-diagram amplitudes to quark-diagram amplitudes. We hope to get some physical insight into the baryon amplitudes, using the inverse transformations: Inverting the matrix in Eq. 39 we get

$$\begin{bmatrix} B_{DD} \\ B_{SS} \\ B_{\Sigma\Sigma} \\ B_{\Lambda\Lambda} \\ B_{\Sigma\Lambda} \\ B_{\Lambda\Sigma} \end{bmatrix} = \frac{1}{6} \begin{bmatrix} 1 & 1 & 1 & 1 & 1 & 1 \\ 1 & -1 & 1 & -1 & 1 & -1 \\ 2 & 2 & -1 & -1 & -1 & -1 \\ 2 & -2 & -1 & 1 & -1 & 1 \\ 0 & 0 & \sqrt{3} & -\sqrt{3} & -\sqrt{3} & \sqrt{3} \\ 0 & 0 & -\sqrt{3} & -\sqrt{3} & \sqrt{3} & \sqrt{3} \end{bmatrix} \begin{bmatrix} A_1 \\ A_2 \\ A_3 \\ A_4 \\ A_5 \\ A_6 \end{bmatrix} \tag{40}$$

At this stage, one can impose physical constraints on the quark diagrams (the A amplitudes). Using the inverse transformations this enables us to study the properties of the B amplitudes. This information is important for studying relations (such as exchange degeneracy) between the different baryon representations.

In order to construct the most general inverse transformation, we use

$$\sum_{i=1}^{6} T_{i,st} \; T_{i,uv} = \delta_{su} \, \delta_{tv} \, d_{st} \tag{41}$$

where $d_{st} = 0$ if s and t belong to different representations, and $d_{st} = 6/d$ if they are in the same representation, whose dimension is d (e.g. $d_{12} = 0$, $d_{11} = d_{44} = 6$, $d_{22} = d_{23} = 3$). This gives for the propagator (where we define $C_{st} = 1/d_{st}$ if s and t are

in the same representation, and $C_{st} = 0$ otherwise)

$$B_{st} = C_{st} \sum_{i=1}^{6} T_{i,st} A_i \tag{42}$$

This can be easily verified by substituting Eq. (38). Note that Eq. (42) is just a different form of Eq. (40). In the general case the transformation from the B amplitudes to the A amplitudes is

$$A_{i_1 \ldots i_p} = \sum_{s_1 t_1 \ldots s_p t_p = 1}^{4} T_{i_1, s_1 t_1} \cdots T_{i_p, s_p t_p} B_{s_1 t_1 \ldots s_p t_p} \tag{43}$$

per each baryon line, closed or open. Each pair of indices s and t belongs to one (internal or external) baryon propagator. The baryon line contains p such propagators.

The inverse transformation is

$$B_{s_1 t_1 \ldots s_p t_p} = C_{s_1 t_1} \ldots C_{s_p t_p} \sum_{i_1 \ldots i_p = 1}^{6} T_{i_1, s_1 t_1} \ldots T_{i_p, s_p t_p} A_{i_1 \ldots i_p} . \tag{44}$$

We conclude this subsection by the following remark. If some specific quark diagram A is such that by an appropriate choice of the flavors of all external hadrons, A is the only allowed quark diagram, it can be directly defined to be the amplitude of the corresponding particle diagram for the chosen physical process. This is the case for any tree diagram with only one baryon line, provided $N_f \geq 3$. The loop diagrams of Fig. 10 cannot be defined this way, because it is impossible to separate Fig. 10a from Fig. 10b.

b. Representative and Untwisted Diagrams

According to the rules developed in Sec. 5b, for each open baryon line in a specific quark diagram we have a factor $[L] T_i V T_j V \ldots V T_k [R]$. To obtain the full amplitude, we have to sum all terms of this form that are consistent with the external flavors. However, many of the terms in this sum are equivalent - because of Eq. (16), we could replace, for example, the first V in the expression above by $T_2 V T_2$; this means we could replace T_i by $T_i T_2$ and T_j by $T_2 T_j$. This gives us another term in the sum, which has exactly the same numerical value, and which always contributes to the same physical processes as the original term. Although their diagrammatic representation is different (since $T_i \neq T_i T_2$), we consider them to be equivalent. The replacement of a single V by $T_2 V T_2$ defines a transformation on the terms in the sum. If the number of vertices on a certain open baryon line is n, we have a total of 2^n such transformations, since we have the option at each vertex of replacing V by $T_2 V T_2$ or not. Thus we can generate a class of terms in the sum, all of which are equivalent and any two of which are related by a transformation of this type. Furthermore, each of the 2^n terms we get in this way are counted separately in the sum; this is because, for each such transformation except the identity one, there is at least one T_i which is multiplied by exactly one T_2, and $T_2 T_i \neq T_i$, $T_i T_2 \neq T_i$, for all i. Thus, for each open baryon line with n vertices, the sum contains 2^n copies of the same diagram.

For a closed baryon line, the expression is $T_r[T_i V T_j V \ldots V]$. If the line contains n vertices, we can again define 2^n transformations; however, this time not every term so generated is counted separately in the sum. This is because there is one transformation besides the identity one for which no T_i is multiplied by exactly one T_2, namely the one in which <u>each</u> V is replaced by $T_2 V T_2$; this transformation replaces each T_i by $T_2 T_i T_2$. Now if there is at least one T_i around the loop with the property $T_2 T_i T_2 \neq T_i$ (this property is true for T_3, T_4, T_5, and T_6), then this transformation connects different terms in the sum and we again have in the sum 2^n copies of the same diagram. However, if for each T_i around the loop $T_2 T_i T_2 = T_i$ (which would mean that every T_i is either T_1 or T_2), this last transformation does not produce a new term, and so the sum contains $\frac{1}{2} 2^n$ copies (since the 2^n would-be different terms are identical in pairs) of the same diagram.

It is convenient to choose, in a standard way, a single copy of each diagram, which we call a representative diagram. We can do this as follows: For an open baryon line we start from the back end, and at each vertex apply Eq. (16) or not in such a way that the twist in the preceding propagator will be T_1, T_4, or T_6. The twist on the last propagator is unrestricted.

In a baryon loop, we arbitrarily choose one vertex to be the first one. The propagators are $1, 2, \ldots n$ where the order is in the arrow direction. If among the first $n - 1$ propagators there is one whose twist is not T_1 or T_2, we have the freedom to transform the first propagator of this type to T_4. Then we have the freedom to

transform all the propagators, except the last one, to the "standard" twists T_1, T_4, or T_6. The last one is unrestricted. If all the first $n - 1$ propagators are T_1 or T_2, we transform all of them to T_1. The last propagator can be any of T_1, T_2, T_3, or T_4.

We may now replace the rule stated at the end of Section Vb, which says to sum over all twists on each propagator consistent with the external flavor assignment, by the following equivalent rule: (1) take only one copy of each diagram (e.g. the representative diagram); (2) add the diagrams with equal weight (rather than the $\left(\frac{1}{2}\right)^n$ weight of Sec. (Vb)); (3) multiply by $\frac{1}{2}$ for each closed baryon loop which has no twist other than T_1 or T_2.

In order to define the quark diagrams for baryons, we drew the vertices in the standard form of Fig. 4c, and twisted the baryon propagators. For some applications it is more convenient to adopt a new way for drawing the same diagrams, in which most of the baryon propagators are untwisted, and the vertex is not in a standard form. Instead of drawing an open baryon line as in Fig. 14a, we shall draw it as in Fig. 14b. We fix the quark-lines at the two ends of the baryon line at the same position they had in Fig. 14a, and untwist all the baryon propagators and the external baryon at the back end. We do not have any more the freedom to untwist the external baryon at the front end, and it may carry any twist (not necessarily the same as the one it carried before). These untwisted quark-diagrams are in an obvious one-to-one correspondence with our representative diagrams. Using them, it is easier to see which mesons are emitted from the same line. This information is probably important for determining the analytic structure of the diagrams.

For a closed baryon line, we can also draw untwisted quark-diagrams using a similar procedure. We start with the meson which was arbitrarily chosen to be the first, and go in the arrow direction. The quark-line which has just emitted the first meson, is fixed to be on the outside. Out of the other two lines, we choose the one which will first emit a meson, to be in the middle. In the resulting diagram, all the propagators are untwisted, except for the last one whose twist is unrestricted (if all the other n - 1 mesons are emitted from the outside line, we just use our representative diagram). The untwisted diagrams constructed in this way are again in one-to-one correspondence with our representative diagrams.

We remark also that it is sometimes useful to classify quark diagrams by their external quark connections. For a diagram with B external baryons and M external mesons, there are $(3B + M)!$ possible connections (We have to connect each of the entering $(3B + M)$ quark lines to one of the outgoing lines.). However, knowledge of the quark connections is not sufficient to enable us to determine the associated particle diagrams; in particular, it may not be sufficient to determine which external baryons are connected through a baryon line in the particle diagram.

c. Resolution of N_f-factor Paradox

The N_f factor for a quark loop that goes through a baryon propagator is not as trivial as in the meson sector, since the baryon is made of three identical objects. Consider the contribution of a baryon propagator, which is in a (flavor) singlet representation to diagram (10a). Since the singlet is totally antisymmetric in flavor, it cannot have two identical flavors, and its only state is the s-u-d state.

Therefore it seems that we are not allowed to sum over the flavor of the loop, q_i, since only $q_i = s$ contributes. Similar difficulties occur for the octet contribution. If so, how did we get a factor of N_f per quark loop?

Consider the vertex of Fig. 6, where A is a singlet. If we describe the singlet as

$$|\text{singlet}\rangle = \begin{matrix} \rightarrow s \\ \rightarrow u \\ \rightarrow d \end{matrix} \; 1/\sqrt{6} \begin{bmatrix} \alpha & \alpha & \gamma & \beta & \beta & \gamma \\ \beta & - \gamma & + \alpha & - \alpha & + \gamma & - \beta \\ \gamma & \beta & \beta & \gamma & \alpha & \alpha \end{bmatrix} ,$$

it is clear that the $\begin{matrix} \rightarrow u \\ \rightarrow u \\ \rightarrow d \end{matrix}$ state is zero. Nevertheless, we calculate the coupling of this zero state to the vertex of Fig 6 using our rules. For any flavor assignment for particles B and F, we have to sum over all possible pairs of twists T_i and T_j, where T_i is the twist on A and T_j on B. If the pair T_i and T_j contributes, so does the pair $(T_4 T_i)$ and T_j, since T_4 just interchanges the two u quarks. However, $T_4 = -1$ for a singlet [Eq. (9)], and therefore all diagrams cancel in pairs. The coupling of the zero state is indeed zero. The reason for not neglecting this zero state to begin with, is that its zero coupling is due to the sum of two different quark topologies. Its contribution to a single quark diagram is <u>non zero</u>. In Fig. 10 with the internal baryon a singlet the contribution of the $q_i = u$ to diagram a is non-zero. However, this contribution is exactly minus diagram b, in which the uud term in the propagator is the only term.

In general, such zero states will never contribute to any physical amplitude, but they do contribute to individual quark

diagrams. This contribution is essential for getting the N_f factor for quark loops.

A somewhat analogous situation exists in the meson sector as we have already mentioned in Sec. (Vb): diagrams of a given topology do not obey charge-conjugation selection rules, although the sum of all diagrams does.

d. What about Color, Duality and Exotics

We have not formulated a dynamical theory of quark diagrams. However, our results are very general, and they apply to any dynamical theory which can be formulated in terms of particle diagrams and which has the properties we have assumed (such as $SU(N_f)$ symmetry and the OZI rule). We have shown that these properties by themselves, independently of the rest of the dynamics, are sufficient to define the quark diagrams and to determine some of their properties.

We could have carried through the whole program without ever mentioning quarks. For example, for $N_f = 3$, we would impose on each vertex the requirement that the ϕ meson is not coupled to the non-strange baryons. Our expression for the full amplitude obtained by summing all quark diagrams coincides with what we could have obtained with this requirement by using $SU(3)$ Clebsh-Gordon coefficients; thus the correctness of our expression for this sum is guaranteed by $SU(3)$ invariance. Each individual quark diagram would have the interpretation of depicting a particular way of contracting $SU(3)$ indices, when baryons are represented by a three-rank $SU(3)$ tensor (which is possible if the baryons are in the 1, 8, or 10 representations) and mesons by a second-rank tensor with one upper

and one lower index. Of course were we to state our program this way, the motivation would be completely obscured. Nevertheless, the fact that we could have proceeded without mentioning quarks, and obtained equivalent results, demonstrates that nothing we have done depends on any property of "actual" quarks. In particular, for the purpose of this paper, it is not important whether or not quarks are colored; for us, N_c is merely the number of quarks in the baryon. We do not have to construct the color wave-function of hadrons, or to worry about the flow of color indices through the quark lines of our diagrams.

In a dual theory of mesons, a given quark diagram is not associated with a unique particle diagram. still, our program could be carried out in this case. For a given quark diagram, one would merely pick any particle diagram associated with it (our definition of a particle diagram includes the possibility that each line represents an infinite sum of particles), and then calculate the quark diagram according to our rules. Duality implies that one could have picked other particle diagrams, and would have gotten the same answer for the quark diagram; this is a constraint on the B amplitudes which we have neither violated nor imposed. Because of the many degeneracies of dual theories of mesons, it might not be necessary to associate with each line a particular multiplet with a given charge-conjugation and then to sum over all multiplets, but it could be done in this way as in Ref. 5. The duality properties of baryons are at the present time unclear, which is another reason why it may be useful to see how much information about quark diagrams can be obtained which is independent of any particular duality assumptions.

We have assumed that all hadrons which appear in the particle diagrams are either $q\bar{q}$ states or qqq states. What happens to our rules if there are more complicated states in the underlying theory? Obviously, as long as we restrict ourselves to particle diagrams in which the new hadrons do not appear, our rules are unchanged (whether or not these diagrams are dual to other diagrams which contain exotics). In case we are interested in the contribution of the exotic states, the generalization of our rules is straight-forward. Consider an exotic state of the type $qq\bar{q}\bar{q}$. Twisting the two quarks (or the two antiquarks) is related to their permutation symmetry. Exchanging the roles of the two quarks with the two antiquarks is related to the charge-conjugation eigenvalue of the neutral member of the $SU(N_f)$ multiplet.

0 0 0 4 0 8 0 1 8 1 5

VII. SUMMARY

We have defined quark diagrams for baryons, assuming that all the dynamical information can be expressed on the hadronic level in terms of particle diagrams (The "particles" in the diagram may be real or virtual hadrons, reggeons, dual resonances, etc.). We have constructed a transformation from a complete set of particle-diagram amplitudes (the B amplitudes) to a complete set of quark-diagram amplitudes (the A amplitudes), and derived the rules for constructing physical amplitudes using these quark diagrams. For $N_f \geqslant 3$ (in general $N_f \geqslant N_c$) the quark diagrams can be uniquely defined using measurable quantities. Although for $N_f < 3$ our procedure is not unique, there are no ambiguities when we sum the various quark diagrams to obtain physical amplitudes.

Our method is model independent and is appropriate for any theory (with or without quarks) which can be formulated on the hadronic level and satisfies $SU(N_f)$ symmetry and the OZI rule. In particular it is independent of any color considerations and duality constraints. It does not answer questions like "what are the constraints imposed on the quark diagrams due to the baryon analogue (if any) of duality or planarity?" Instead, it provides us with a framework for discussing such questions. Moreover, once we understand (or guess) the properties of the quark diagrams (such as their analytical structure), we can use the inverse transformation (Eq. (44)) to study the implication of these properties for the hadronic level (such as exchange-degeneracy for baryons).

We have seen that the various twists on the baryon propagators are related to the permutation symmetry of the $SU(N_f)$ multiplets much in the same way as the meson twist is related to charge-conjugation. We have shown that a factor of N_f is associated with each closed loop, in spite of the fact that in certain cases the permutation symmetry would seem to forbid us to sum over the flavors of the quarks flowing around the loop.

The rules for calculating any given quark diagram with specified multiplets are presetned at the end of Sec. (Vb). The summation over multiplets is done in Sec. (VIa).). The rule for summing all quark diagrams with the $\left(\frac{1}{2}\right)^n$ weight factor (where n is the number of BBM vertices) is also presented at the end of Sec (Vb). In Section (VIb) we presented an alternative form of this rule: sum over the topologically distinct diagrams (e.g. the representative diagrams) compatible with the external flavor assignment, and include a factor of $\frac{1}{2}$ for each baryon loop which has no twists other than T_1 and T_2.

Acknowledgements

We would like to thank G. F. Chew, H. Garland, P. Hoyer and J. Koplik for discussions and Dessa Bucksbaum for typing the manuscript. One of us (J. F.) thanks the Lawrence Berkeley Laboratory, and both of us the Aspen Center for Physics, for their hospitality.

APPENDIX: CHARGE-CONJUGATION RELATIONS FOR BARYONS

When we change the direction of the arrow of one baryon line in a particle diagram, we get a different diagram. The contribution of a given set of multiplets to the first diagram is related to the contribution of a different set (in which the multiplets in the baryon line are replaced by their anti-multiplets) to the second diagram. If the baryon line is open, the two diagrams contribute to <u>different</u> processes. If it is closed, they both contribute to the same process.

We adopt the notation

$$|\bar{q}\ \alpha\rangle = C|q\ \alpha\rangle \tag{A1}$$

where C is the charge-conjugation operator (In this notation the (d,u) and the $(\bar{u},-\bar{d})$ are the $SU(2)$ multiplets with the conventional phases.). The diagrammatic representation of Eq. (A1) is

$$|\leftarrow q\ \alpha\rangle = C|\rightarrow q\ \alpha\rangle \tag{A2}$$

Let us now compare the vertex of Fig. (4a) with the vertex of Fig. (15a). The baryon multiplets are replaced by their charge-conjugated multiplets. The quark diagram representation for the s-u-d sector is shown in Figs. (4b,c) and (15b,c). According to our convention, the B multiplet is in the back side of the baryon line of Fig. 15. The top direction is unchanged. We are still using the symbol B (rather than $\bar{B}$) since the direction of the arrow indicates that this is just the charge-conjugated state of the B state in Fig. 4 (Note that the arrow indicates the flow of the baryon

number. It has nothing to do with "incoming" or "outgoing". If B in Fig. 4 is, for example, an outgoing baryon, B in Fig. 15 is an outgoing antibaryon in exactly the same spin-location state. If B in Fig. 4 is the Λ state of an octet, it is described by $\begin{matrix}\rightarrow & s\\ \rightarrow & u\\ \rightarrow & d\end{matrix}\ e_\Lambda$. The B state of Fig. 15 is then $\begin{matrix}\leftarrow & s\\ \leftarrow & u\\ \leftarrow & d\end{matrix}\ e_\Lambda$, with the <u>same</u> spin-location vector e_Λ and therefore it is defined to be the $Y = I = 0$ state of the antibaryon multiplet. These two states transform in an exactly the same way under permutations (Note that we do not use the symbols $\bar{s}$-$\bar{u}$-$\bar{d}$.). The only difference between Fig. 4 and Fig. 15 is the direction of the arrow. Therefore, in one case we have to define the vertex matrix V^{AFB} and in the other, V^{BFA}, where the meson multiplet F is fixed. By charge-conjugation symmetry, the $(\Sigma_A\Lambda_B\phi_F)$ coupling of Fig. 4 is equal to the $(\Lambda_B\Sigma_A\phi_F)$ coupling of Fig. 15 multiplied by C_F (where $C|\phi_F\rangle = C_F|\phi_F\rangle$). Therefore, $V^{AFB}_{\Sigma\Lambda}$ of Fig. 4 is equal to $V^{BFA}_{\Lambda\Sigma}$ of Fig. 15 multiplied by C_F. We thus see that

$$V^{AFB} = C_F(V^{BFA})^T \tag{A3}$$

where the l.h.s. refers to Fig. 4 and the r.h.s. to Fig. 15.

Notice that the meson propagator in Fig. 15c is twisted compared to Fig. 4c. We may think of this twist as responsible for the C_F factor in Eq. (A3). This is very similar to the meson sector, where a C_F factor is associated with every twist on the propagator of the meson F. An MMM vertex which is attached to the F propagator contributes one twist (and a C_F factor) if it is of the V_2 type. A BBM contributes in the samy way if the baryon line is reversed.

Let us reverse the arrows in Fig. 8a. Suppose we want to calculate diagram 8d (with reversed arrows, and with a twist on each meson line). This diagram, which we denoted by $A^{AXB}_{4,5,6}$ before reversing the baryon arrows, is now denoted by $A^{BXA}_{6,3,4}$, since the twists operate in the opposite direction. Instead of Eq. (22) for $A^{AXB}_{4,5,6}$ we now get

$$A^{AXB}_{6,3,4} = [\,R\,]\, T_6\, V^{BGX}\, T_3\, V^{XFA}\, T_4 \left[L\right] P_X \qquad (A4)$$

where the column vector $\left[R\right]$ of Eq. (22) becomes a row vector, since now the right side is in the back. The propagator P_X is unchanged by charge-conjugation symmetry. Taking the transpose of Eq. (A4), using (A3) for the two vertex matrices and using $T_3^{\,T} = T_5$, we finally get

$$A^{BXA}_{6,3,4} = C_F C_G\, A^{AXB}_{4,5,6} \qquad (A5)$$

Let us choose a flavor assignment for the external particles of Fig. 8a such that diagram $A^{AXB}_{4,5,6}$ is allowed. We now reverse the direction of the arrow in Fig. 8a and choose exactly the same flavor assignment. The new external baryon states are the charge-conjugates of the old ones, whereas the external mesons are the same. Diagram $A^{BXA}_{6,3,4}$ (which looks like $A^{AXB}_{4,5,6}$ except for the meson twists and the reversed arrows) will contribute to the new process, only if all the mesons which are emitted from the baryon line are neutral ($q_i\bar{q}_i$). In such a case, the meson channel (FG in our example) is an eigenstate of c.c., and Eq. (A5) follows from c.c. symmetry.

When we reverse the direction of a closed baryon line of any particle diagram, the new diagram contributes to the same process.

Consider two quark diagrams, which look the same, except for the direction of the arrows along the baryon loop, and for an additional twist for each meson emitted from it. These two diagrams are the same, except for a factor $C_{M_1} \cdot C_{M_2} \ldots C_{M_n}$, where $M_1, \ldots, M_n$ are the n mesons emitted from the loop. They will contribute to the same process, only if all the n mesons are neutral. In that case, their sum will vanish if the above mentioned factor is -1. We see that in order to guarantee c.c. conservation in the n-meson channel, we must sum over both directions of the baryon loop. Consider, for example, the coupling of mesons F and G through the baryon loop of Fig. 13. If we want this coupling to vanish when F and G have opposite c.c., we must add the antibaryon loop.

REFERENCES

1. H. Lee, Phys. Rev. Letters 30 (1973) 719;
G. Veneziano, Phys. Letters 43B(1973) 413;
Chan Hong-Mo, J. E. Paton and Tsou Sheung Tsun Nucl. Phys. B86 (1975) 479.
2. Y. Eylon and H. Harari, Nucl. Phys. B80 (1974) 349;
B.R. Webber, Phys. Letters 62B (1976) 449;
Chan Hong-Mo and Tsou Sheung Tsun, Nucl. Phys. B118 (1977) 413.
3. C. Schmid, C. Sorensen and D.M. Webber, Nucl. Phys. B111 (1976) 317;
M. Fukugita, T. Inami, N. Sakai and S. Yazaki, "The Breaking of Exchange Degeneracy..." UT-265 (1976)
Chan Hong-Mo, K. Konishi, J. Kwiecinski and R. G. Roberts, Phys. Letters 63B (1976) 441;
Y. Eylon, Nucl. Phys. B118 (1977) 119;
Y. Eylon and J. Finkelstein, Phys. Letters 66B (1977) 154;
C. Sorensen and D. M. Webber, "Dynamical Thresholds in the Dual Unitarization Scheme," ANL-HEP-PR-76-77 (1976).
4. C. Schmid, C. Sorensen and D.M. Webber, Ref. 3.
5. Y. Eylon, Phys. Rev. D13 (1976) 3317.
6. G. F. Chew and C. Rosenzweig, Phys. Rev. D12 (1975) 3907.
7. S. Okubo, Phys. Letters 5 (1963) 165;
G. Zweig, Cern preprint 8419/TH 412 (1964);
I. Iizuka, K. Okkado and O. Shito, Progr. Theor. Phys. 35 (1966) 1061.

8. M. Hamermesh, "Group theory and its application to physical problems," Addison-Wesley (1962).
9. Y. Eylon, in preparation.
10. H. P. Stapp, Topological Expansion For Baryons and Mesons, LBL-6118 (1977);
F. J. Capra, Incorporation of Baryons into the Topological Expansion, LBL-6119 (1977);
G. C. Rossi and G. Veneziano, A Possible Description of Baryon Dynamics in Dual and Gauge Theories, TH 2287-CERN (1977).

0 0 0 0 4 8 0 1 8 1 7

FIGURE CAPTIONS

Fig. 1:	The permutation twists.
Fig. 2:	Twist multiplication.
Figs. 3-7:	The BBM vertex.
Fig. 8:	A quark diagram.
Fig. 9:	The two component vertex.
Fig. 10:	Loops.
Fig. 11:	(a) The vertex matrix. (b) A twist matrix.
Fig. 12:	The indices of a B amplitude. (c) and (d) are forbidden.
Fig. 13:	A baryon loop.
Fig. 14:	(a) A (representative) quark diagram. (b) The untwisted version of (a).
Fig. 15:	Reversing the baryon arrow in Fig. 4.

0 0 0 0 4 8 0 1 8 1 8

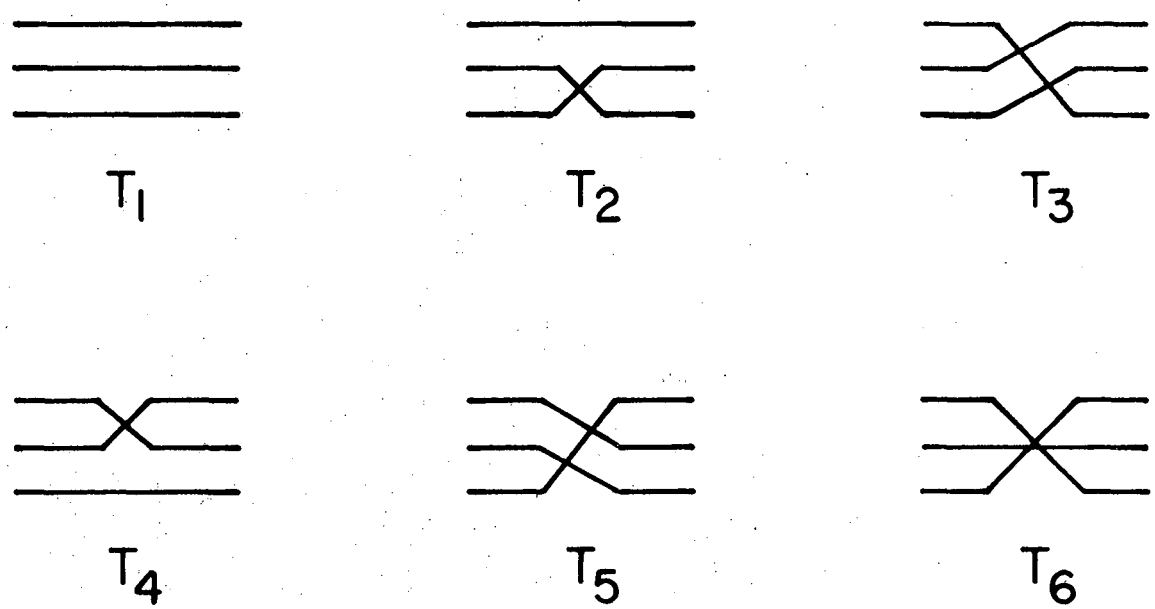

Fig. 1

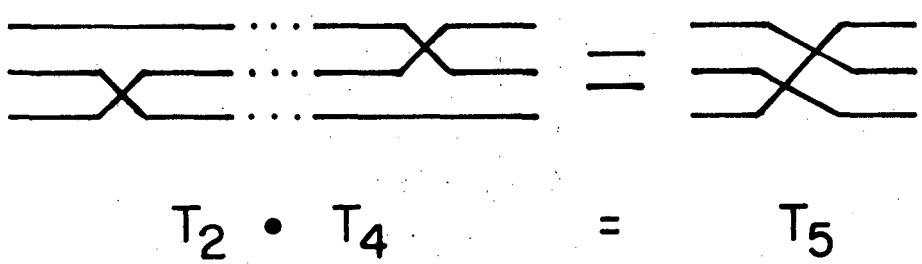

Fig. 2

XBL 775-966

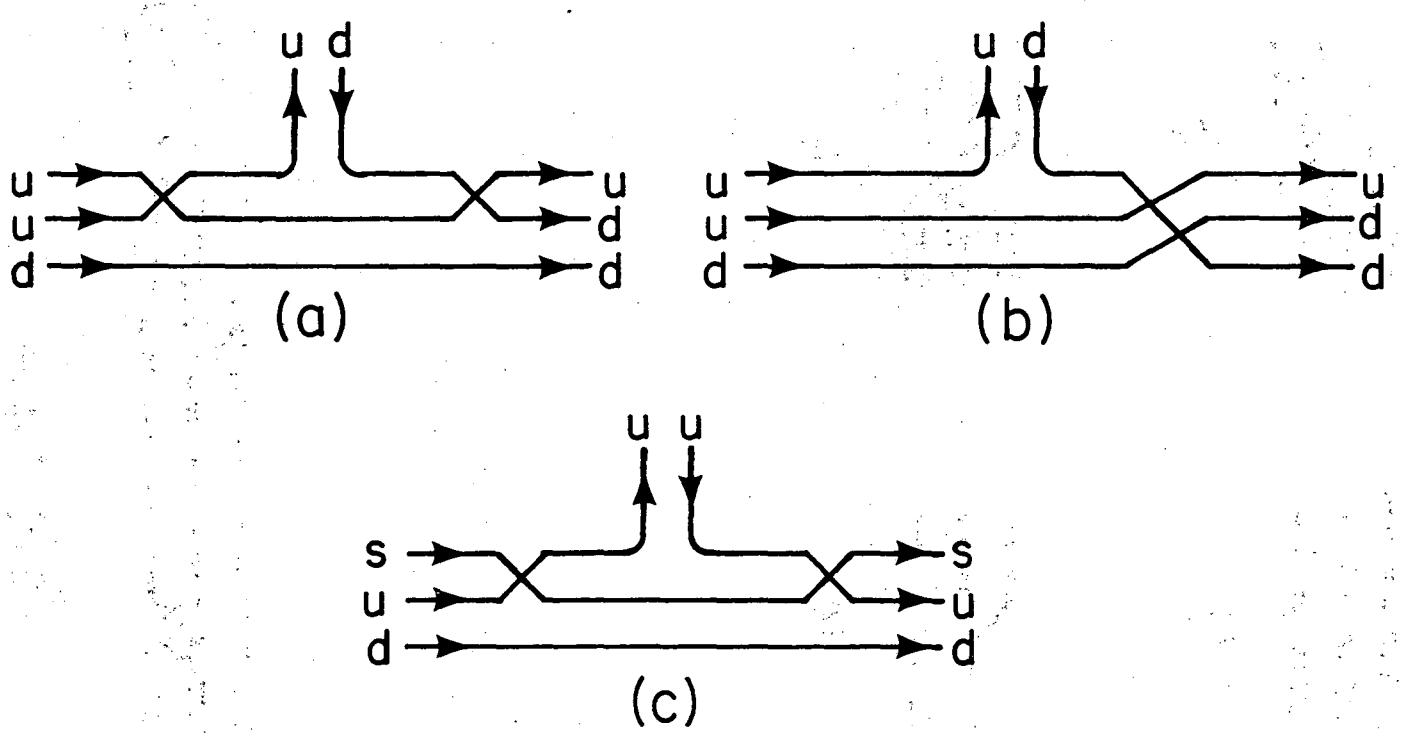

Fig. 3

XBL775-964

0 0 0 0 4 8 0 1 8 1 9

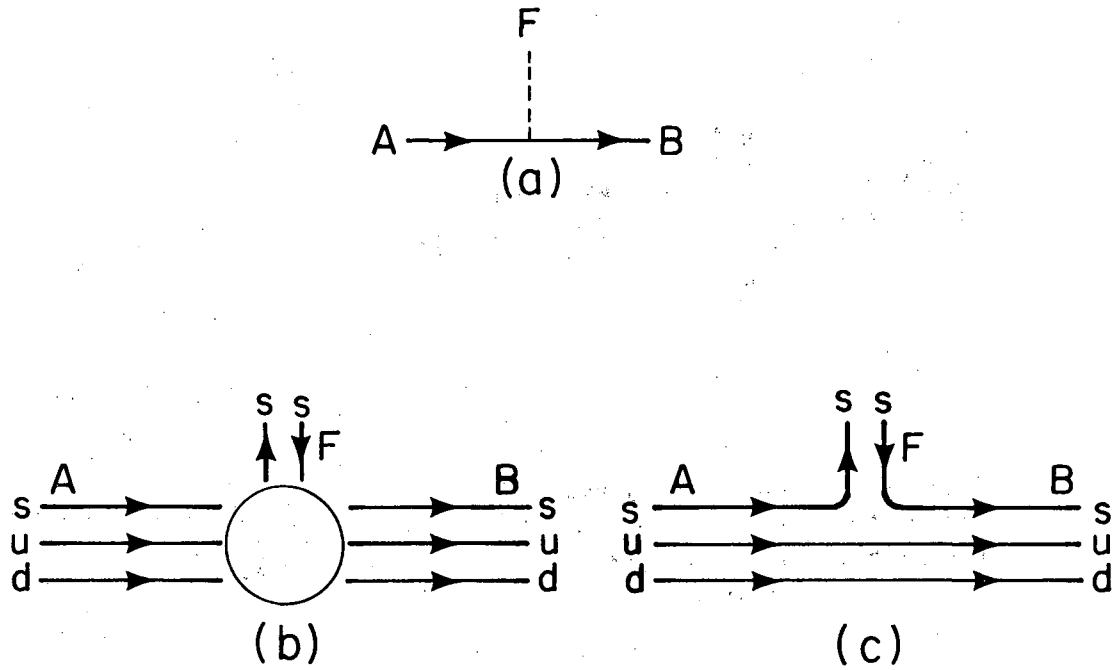

Fig. 4

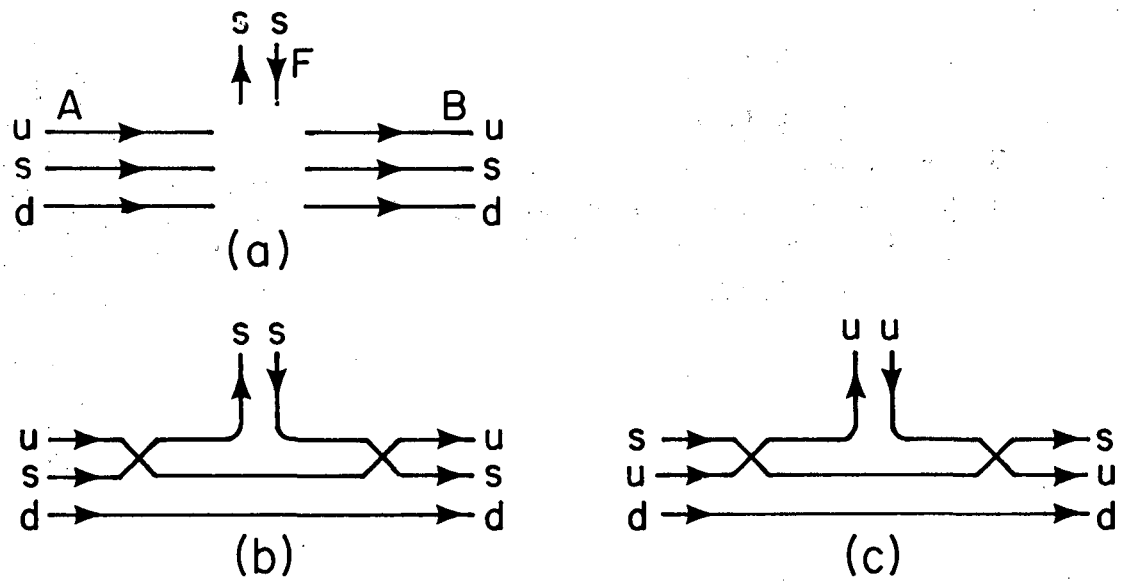

XBL775-967

Fig. 5

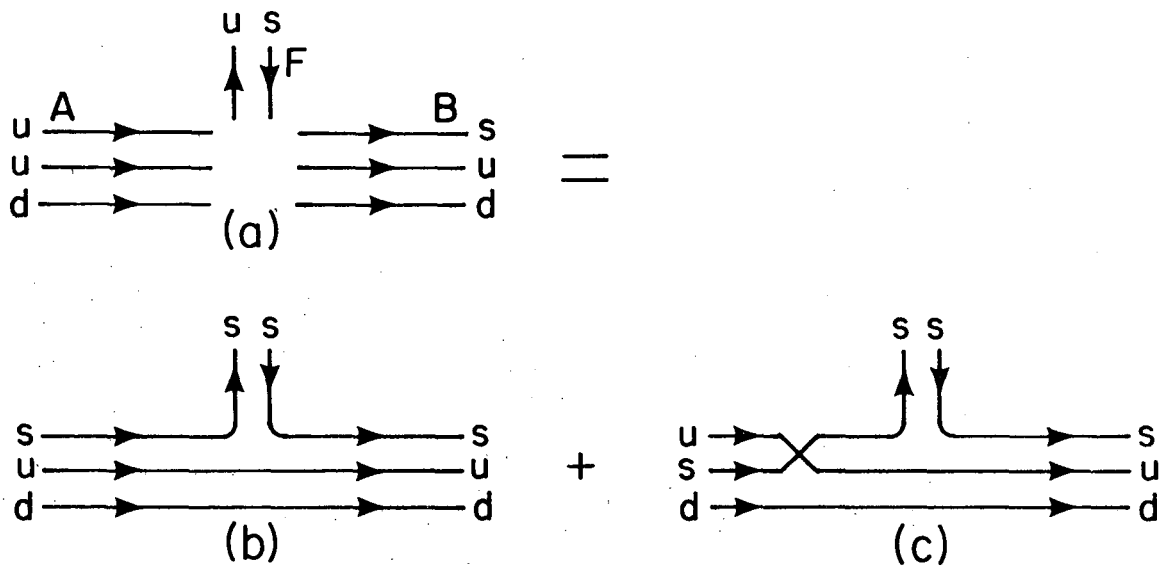

Fig. 6

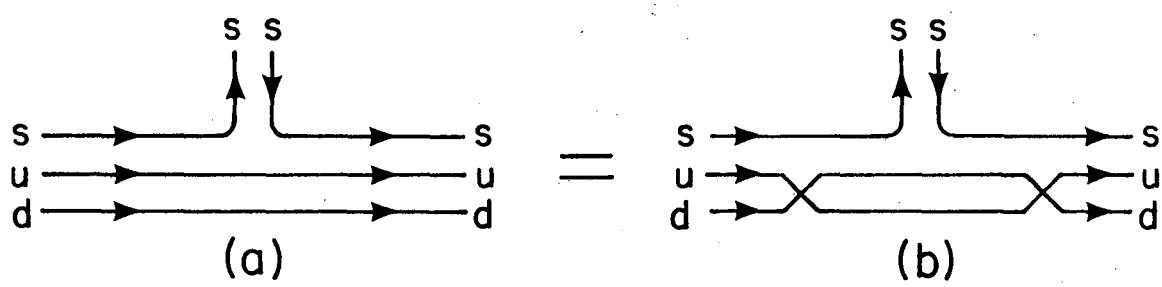

Fig. 7

XBL 775-968

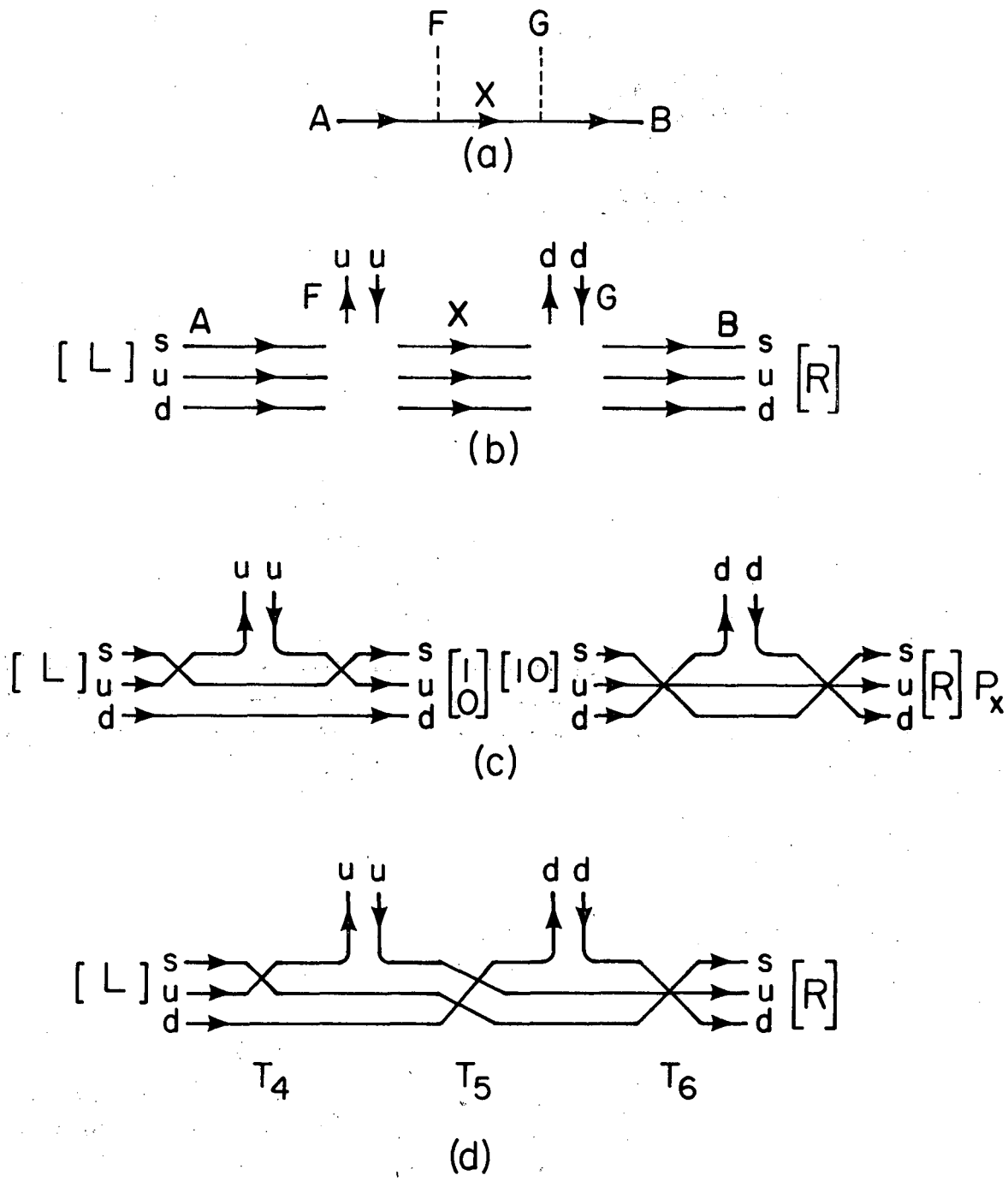

Fig. 8 XBL 775-969

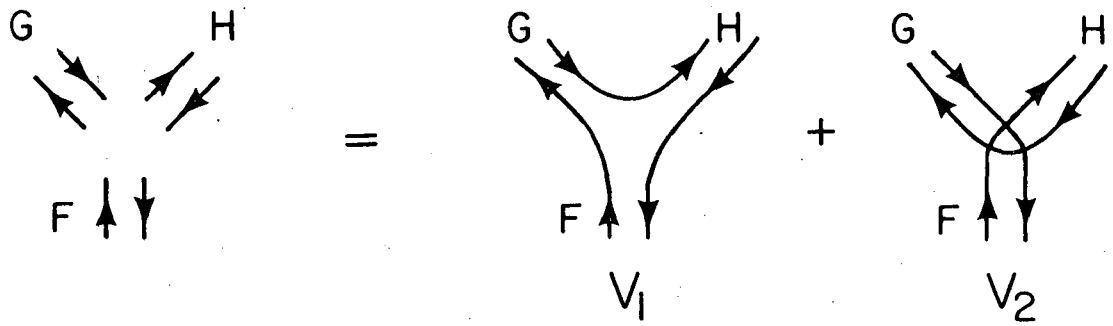

Fig. 9

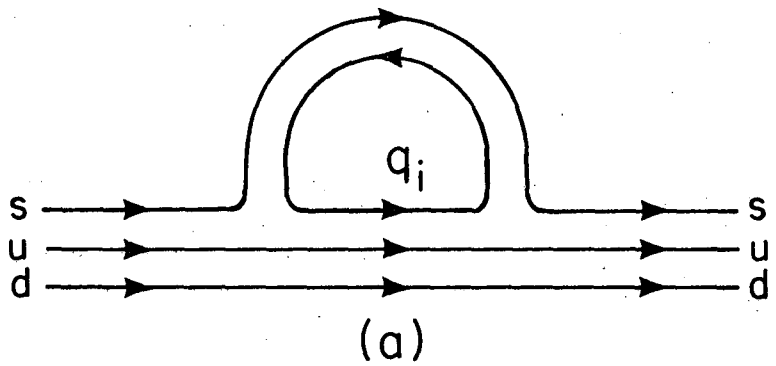

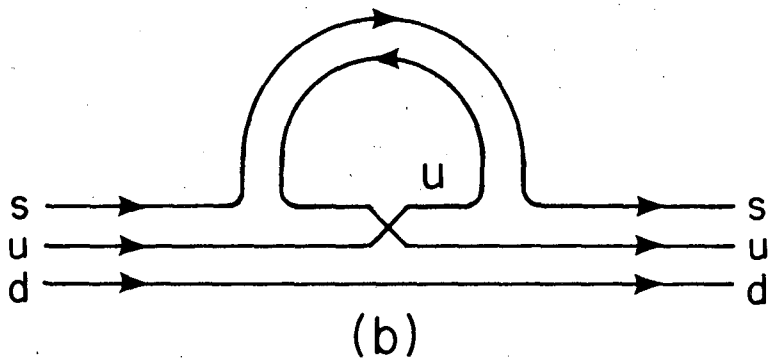

Fig. 10 XBL 775-971

$$
\begin{array}{c|c|c|c|c|}
 & D & \Sigma & \Lambda & S \\
\hline
D & V_{DD} & V_{D\Sigma} & 0 & 0 \\
\hline
\Sigma & V_{\Sigma D} & V_{\Sigma\Sigma} & 0 & 0 \\
\hline
\Lambda & 0 & 0 & V_{\Lambda\Lambda} & V_{\Lambda S} \\
\hline
S & 0 & 0 & V_{S\Lambda} & V_{SS} \\
\hline
\end{array}
$$

(a)

$$
T_4 = \begin{array}{|c|c|c|c|}
\hline
1 & 0 & 0 & 0 \\
\hline
0 & -\frac{1}{2} & -\frac{\sqrt{3}}{2} & 0 \\
\hline
0 & -\frac{\sqrt{3}}{2} & \frac{1}{2} & 0 \\
\hline
0 & 0 & 0 & -1 \\
\hline
\end{array}
$$

(b)

Fig. 11

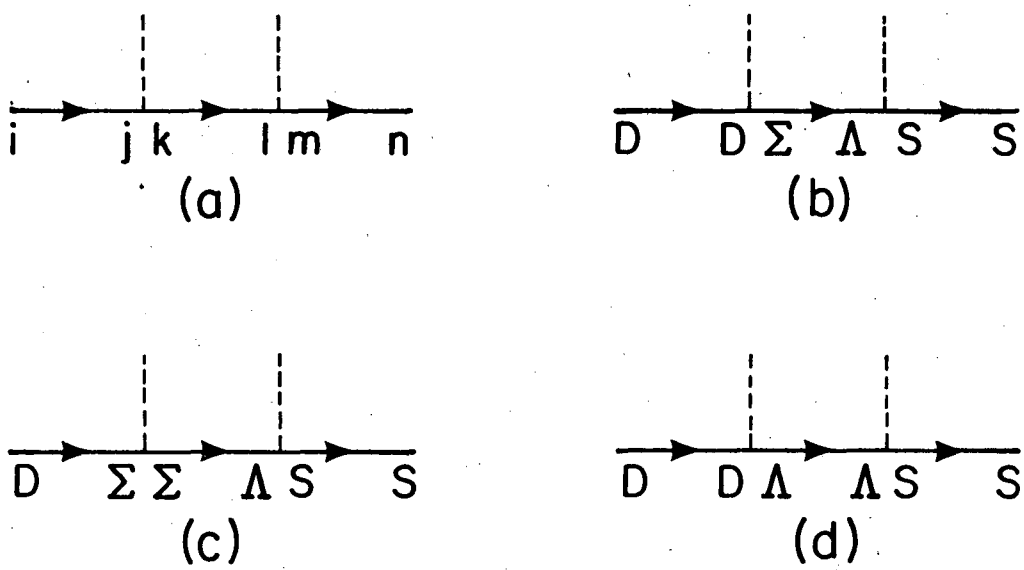

Fig. 12

XBL 775-963

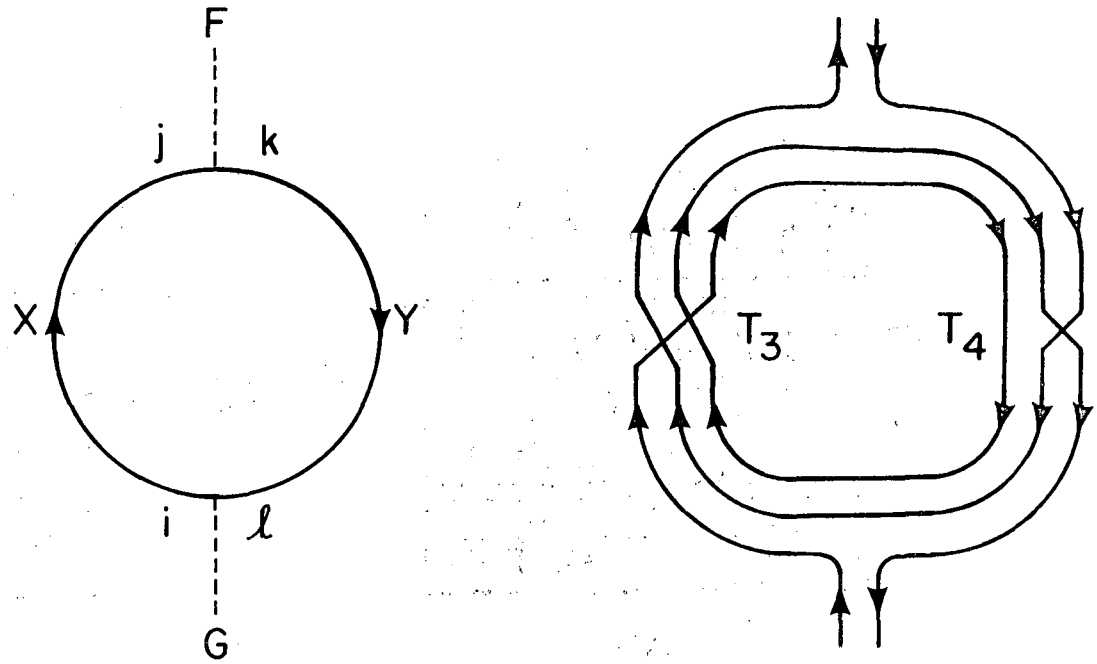

Fig. 13

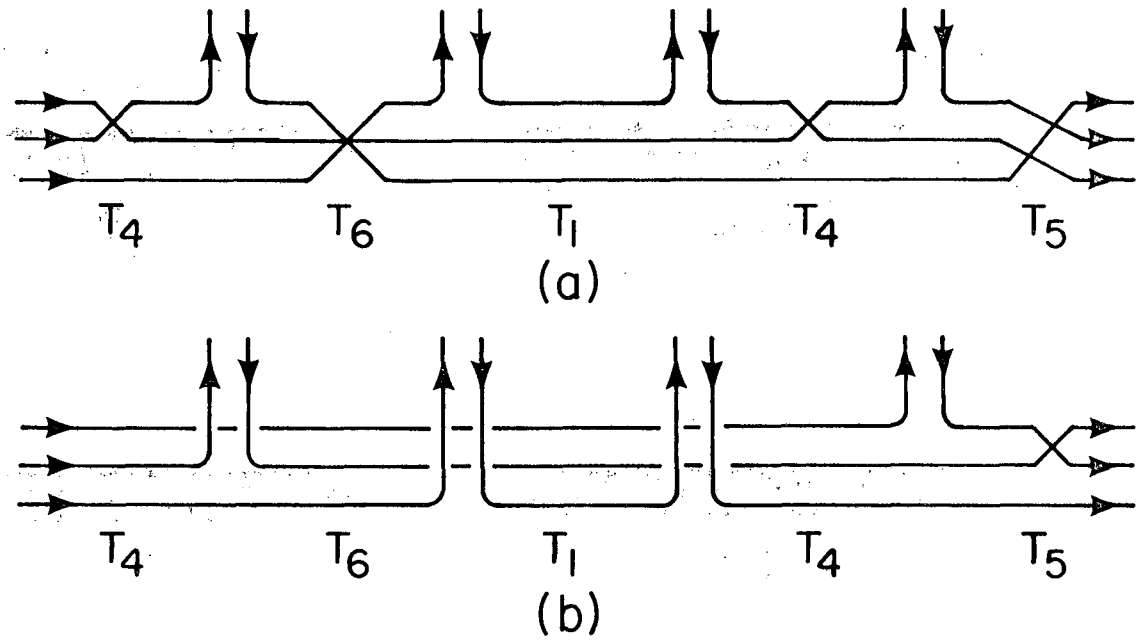

XBL775-965

Fig. 14

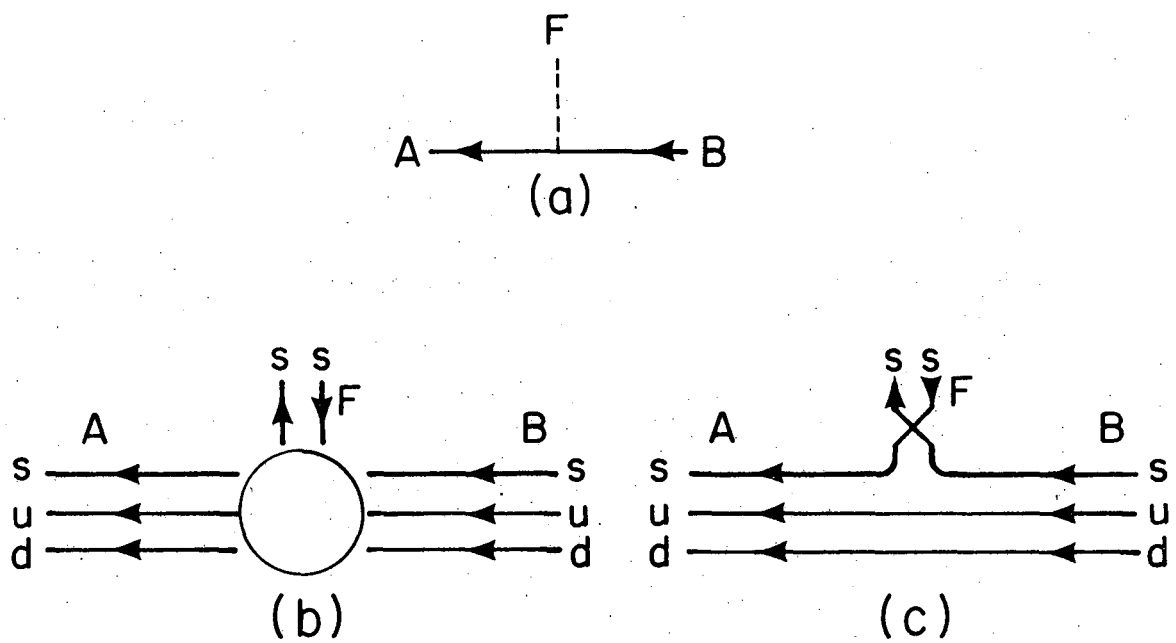

Fig. 15

XBL 775-970

This report was done with support from the United States Energy Research and Development Administration. Any conclusions or opinions expressed in this report represent solely those of the author(s) and not necessarily those of The Regents of the University of California, the Lawrence Berkeley Laboratory or the United States Energy Research and Development Administration.

TECHNICAL INFORMATION DIVISION
LAWRENCE BERKELEY LABORATORY
UNIVERSITY OF CALIFORNIA
BERKELEY, CALIFORNIA 94720