0 0 0 0 4 9 0 3 9 9 1

uc-66 i

Presented at the 12th Intersociety Energy
Conversion Engineering Conference,
Washington, DC, August 28 - September 2, 1977

LBL-7008

c.1

MULTIPARAMETER OPTIMIZATION STUDIES ON GEOTHERMAL ENERGY CYCLES

W. L. Pope, H. S. Pines, L. F. Silvester,
M. A. Green, and J. D. Williams

RECEIVED
LAWRENCE
BERKELEY LABORATORY

DEC 12 1977

LIBRARY AND
DOCUMENTS SECTION

August 1977

Prepared for the U. S. Department of Energy
under Contract W-7405-ENG-48

For Reference

Not to be taken from this room

LBL-7008
c.1

LEGAL NOTICE

This report was prepared as an account of work sponsored by the United States Government. Neither the United States nor the Department of Energy, nor any of their employees, nor any of their contractors, subcontractors, or their employees, makes any warranty, express or implied, or assumes any legal liability or responsibility for the accuracy, completeness or usefulness of any information, apparatus, product or process disclosed, or represents that its use would not infringe privately owned rights.

0 0 0 0 4 9 0 3 9 9 2

MULTIPARAMETER OPTIMIZATION STUDIES ON GEOTHERMAL ENERGY CYCLES

W. L. POPE, H. S. PINES, L. F. SILVESTER, M. A. GREEN, AND J. D. WILLIAMS

LAWRENCE BERKELEY LABORATORY
UNIVERSITY OF CALIFORNIA
BERKELEY, CALIFORNIA 94720

ABSTRACT

Various standard geothermal power cycles are modeled and optimized with program GEOTHM. The results are displayed in 3-D isometric form. These graphical plots vividly display the sensitivity of energy cost and other performance criteria as a result of departures from the design operating point. For example, we will present the mutual interaction of energy cost, resource utilization efficiency, and resource temperature as an EC-RUE-RT surface for a range of temperatures between 100°C and 300°C. Calculation results will be presented for subcritical and supercritical binary cycles with several pure fluids, and on two stage flashed steam cycles for practical non-condensable gas levels.

INTRODUCTION

The Lawrence Berkeley Laboratory has contracted with the U. S. Energy Research and Development Administration, Division of Geothermal Energy (ERDA-DGE) to do energy cost optimization studies of geothermal power plants. These studies are being done in FY 77 using the LBL developed computer program GEOTHM (Refs. 1, 2, 3, 4).

The objective of these studies (Ref. 5) is to determine the general influence of major process variables on the mutual interaction of the (1) energy cost, (2) resource utilization efficiency, and (3) resource temperature for selected ideal geothermal cycles for assumed resource and site specific conditions, subsystem costs and efficiencies, and working fluids.

We present limited preliminary results of the first phase of a two part study of the economics of optimized binary and flashed steam geothermal power plants. Most of the results of the study (deferred until July 1977 because of other priorities) will be presented at the IECEC Conference in Washington, DC.

SCOPE OF THE OPTIMIZATION STUDIES

Table 1 shows the complete study scope. Deliverable items include three dimensional isometric computer plots of cycle busbar energy cost as a function of:

a. Resource temperature and resource utilization efficiency.
b. Resource temperature and maximum well flow rate for 50 MWe (net) binary cycles and two stage flashed steam cycles for various site specific conditions and wet bulb temperatures. The binary cycles assume conventional tube-in-shell heat exchangers and are cost optimized in seven dimensional space for each of the following working fluids:

a. Isobutane
b. Isopentane
c. Propane.

The flashed steam cycles are optimized for energy cost for non-condensable gas contents of 0.0, 1.5 and 3.0 percent by weight. Follow-on work planned for FY 78 include binary mixture cycles, binary cycles with direct contact heat exchangers, hybrid cycles, and possibly the total flow cycle (Ref. 6).

TABLE 1. General Scope of Optimization Studies

SYSTEM PARAMETERS	PHASE 1	PHASE 2
Cycle	Simple Binary	2 Stage Flash
Config.	Fig. 2	Fig. 3 (Ref.)
Working Fluid	Pure Fluid	Non Applicable
Fluid Types:		Non-conden. Gas Content:
OR Other	(1) R-600a Isobutane	(1) 0.0%
Process	(2) R-(3) Isopentane	(2) 1.5%
Variables	(3) R-290 Propane	(3) 3.0%
Resource Temperature (°C)	100°C to 300°C in 50°C Increments	150°C to 300°C in 50°C Increments
Brine Model	R-718 (Pure H_2O)	R-718 (Pure H_2O)
Well Maximum Flow Rates (Klb/hr)	100, 200, 300, 400, 500 — R-600a @ 200°C and 80°F Wet Bulb Only	100, 200, 300, 400, 500 — 1.5% NGC @ 200°C and 80°F Wet Bulb Only
Wet Bulb Temp. (°F)	(1) 60, (2) 70 — For R-600a Only; (3) 80	(1) 60 - for 1.5% NCG Only; (2) 80
Primary HXR Fouling Factor	Values from SDGE Study @ Heber Res.	Not Applicable
Design U's:		
a. 1ϕ & Super-Crit.	Calc. w/GEOTHM	Not Applicable
b. Boiling	" "	" "
c. Condensing	Estim. & Assume	Estim. & Assume

BACKGROUND

Several studies have been published concerning the feasibility of hydrothermal geothermal power plants (Ref. 6, 7, 8, 9). In addition to simple binary and flashed steam cycles, regenerative and compound cycles, hybrids, and the total flow cycle have been investigated. These previous studies have considerd various plant and field economic factors, primary heat exchanger and prime mover types and efficiencies, working fluids, and site specific resource conditions. Feasibility comparisons were made on both thermodynamic and economic bases. In addition, some otherwise general studies (Ref. 7) have been on cycles which ignored the heat rejection system economics, computing resource utilization efficiences which were found to be considerably optimistic. By concentrating here on the simplest systems, we hope to retain a grasp of the basic priniciples which are often obscured by other complexities.

Part of the confusion about alternatives for geothermal power production from hydrothermal resources rests in the fact that much of readily exploitable reserves are in a narrow temperature band between about 300 F and 400 F where decisive choices between, say, binary and flashed steam systems are difficult to make - the system capital investments and energy costs are comparable (Ref. 10).

In significantly higher temperature hydrothermal resource areas, problems with either hypersalinity, high non-condensible gases, corrosion, or high scaling potential exist which require either new concepts, hybrids, exotic materials, or combinations of the foregoing with few solutions on the near term. Because of these bad actors with high implied risk, and lack of agreement within the geothermal community about relative economics of the easily solved problems, there has been difficulty attracting significant private capital to fund geothermal development at previously envisioned rates. Consequently ERDA has had to develop programs to counter the tide of controversy and stimulate development.

Although this presentation is obviously not the proper mechanism for discussing goethermal exploitation plans, rational information about the influence of key process variables, gathered on a common basis for various simple conversion alternatives should help provide a foundation for such plans.

Simply stated, short term geothermal development goals can be achieved with:

1. power on line early
2. at competitive energy costs
3. with efficient utilization of the resources.

We feel that hydrothermal development plans will better attract the necessary private investments if easily developed moderate temperature KGRA's are exploited first with conventional conversion systems of high reliability. This suggests that first generation hydrothermal plants should be either flashed steam or binary cycles on KGRA's of low salinity like those at Heber, Raft River, or Valles Caldera. Recent feasibility case studies by Ben Holt (Ref. 10) and the Bechtel Corporation (Ref. 11) for the Electric Power Research Institute (EPRI) and ERDA-DGE, respectively, confirm this and identify few problems at these sites not solvable with existing technology. The LBL optimization studies anticipate this direction, and the scope (Table 1) is defined to encompass these systems.

A LOGICAL APPROACH?

A straight forward way to display the trade-offs toward the short term goals above is with three dimensional plots of optimized designs which quantify the mutual interaction of (1) busbar energy cost, (2) resource utilization efficiency and (3) resource temperature; EC-RUE-RT plots (Ref. 12). These design surfaces can be constructed for each candidate conversion system considered for various site specific conditions (i.e., fouling factors, non-condensable gas content, well flow rates, and wet bulb temperatures).

These EC-RUE-RT or EC-RT-WF plots illustrate easily understood trends which with supporting data can be extremely valuable in (1) determining the relative ranking of sites, cycles, and/or working fluids, (2) developing complex design criteria, and (3) establishing economically achieveable resource utilization efficiencies.

INITIAL RESULTS

Figure 1 is an EC-RUE-RT plot constructed using LBL's program GEOTHM for a 50 MWe (net) simple binary (isobutane) cycle plant (Ref. 12).

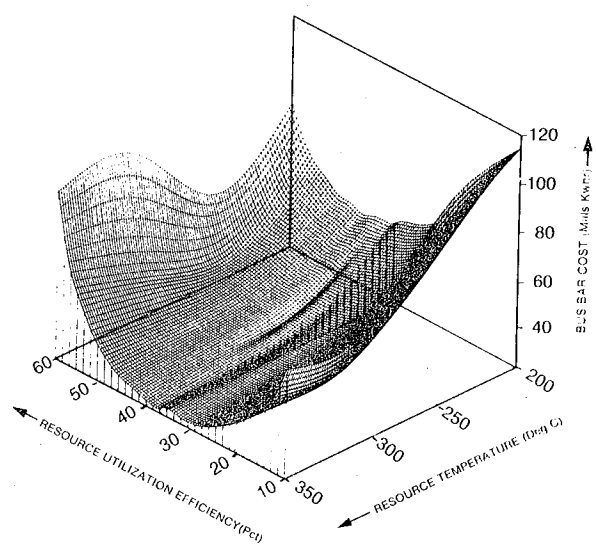

Figure 1. EC-RUE-RT surface for the 50 MWe (net) simple binary cycle (isobutane) shown in Figure 2. For cost assumptions and other details see Ref. 12.

The cycle assumed is shown in Figure 2. Resource utilization efficiency, η_{ru}, for a geothermal power plant is defined as:

$$\eta_{ru} = \frac{P_{net}}{\dot{m}_b |\Delta H|_s}$$

where P_{net} is the net plant generator output and $|\Delta H|_s$ is the maximum available energy of the brine, computed as its isentropic enthalpy difference between source conditions (well head) and sink conditions - the ambient air wet bulb temperature (not the condensing temperature). Brine resource utilization efficiency as defined here is the only generally meaningful thermodynamic efficiency which can be applied to a geothermal power cycle.

Busbar energy cost is computed using the factored-estimate method described in Ref. 7. Cost factors and equipment cost models are based upon information from ERDA source documents, vendors of major capital equipment, and from conceptual design studies of reputable A and E firms. However, since there is a general lack of unanimity concerning equipment costs, the busbar energy costs shown should not be interpreted on an absolute cost basis. We will be employing the costing expertise of a major A and E firm for the remainder of the study, so future plots will have a more consistent basis and will be presented with applicable contingency factors.

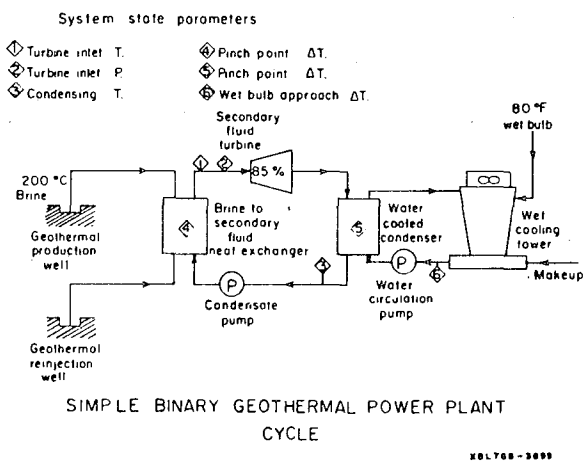

Figure 2. Simple binary cycle geothermal power plant schematic. The six system state parameters are optimized with program GEOTHM for user selected design objectives.

CONSTRUCTING THE EC-RUE-RT SURFACE

The three dimensional EC-RUE-RT plot shown in Figure 1 was created in the following way:

(1) The 50 MWe power plant was optimized for minimum cost power at various resource temperatures (six parameter optimization) and η_{ru} (min. cost) was calculated.

(2) The plant was then optimized for maximum η_{ru} at the same resource temperatures with the exchanger pinch points and cooling tower approach set equal to zero (three parameter optimization). This of course leads to infinite energy cost due to the cost of the exchangers.

(3) The six optimizable parameters were then interpolated between these two design objectives and extrapolated to low η_{ru}, and several additional design points were calculated with GEOTHM in the Passive Mode (Ref. 3). Finally a bi-cubic spline function was fitted to the points to produce the total surface.

The result, Figure 1, is then a complete map over seven dimensional space of all design states (for the assumed 50 MWe cycle cost and site specific conditions) encompassing the two extreme design objectives - maximum thermodynamic performance and minimum busbar energy cost.

As previously pointed out (Ref. 12, 4) minimum energy cost plants do not conform to the design standards of plants which utilize the brine most efficiently. Systems which operate at η_{ru}'s above the minimum energy cost trough of Figure 1 have too few wells, from an economic point of view, and are plant cost dominated (mainly heat exchanger cost because of low design pinch point temperature difference). Systems which operate at η_{ru} values lower than about 40%, where the energy cost is roughly a minimum, are field cost dominated.

Utilities tend to initially favor plant cost dominated systems because of regulated rates of return and anticipation of more wells as the resource temperature declines. Alternatively, if brine is purchased on a per pound basis, field developers or leaseholders tend to favor field cost dominated systems which also helps prevent injection well fouling. The consumer's best interests fall in the middle at the lowest energy cost. Therefore one can hope that resonable common ground is established between utilities and leaseholders as brine pricing strategies evolve. The future of geothermal development depends on this.

COMPARISON OF RESULTS WITH PREVIOUS WORK

Economically achievable resource utilization efficiencies (Figure 1) are not as high as other modeling studies have indicated (Refs. 7, 8); the discrepancies being as much as 30 percent. Part of this results from simplifying assumptions or incomplete plant characterization, and part from definitions.

The economically optimized binary cycle cases in Ref. 7, for example, assume either high (120 F) or low (80 F) "heat rejection temperatures" (condensing temperatures) and fixed primary exchanger pinch point delta T's and turbine inlet temperature differences (10 C and 15 C). Also the "sink" temperature (used for determining brine availablility and η_{ru}) is set equal to the condensing temperature in Ref.'s 7 and 8.

Consequently $|\Delta H|_s$ is underestimated for high sink temperatures leading to optimistic values of η_{ru}. Similarly we find that the low condensing tempera-

tures assumed in Ref. 7 cannot, in general, be economically justified when the heat rejection system (in the form of conventional forced draft wet cooling towers) is included with condenser pinch point delta T and tower approach to wet bulb treated as optimizable parameters. In this case plant yield, $P_{net}/\dot{m}_b$, is overestimated, again leading to high η_{ru}.

The foregoing was offered as one example to illustrate the difficulty of achieving optimum designs without an effective multiparameter optimization code. Pinch points selected for the exchanger subsystems frequently are inconsistent with overall system design objective.

Figure 3 is perhaps a better vehicle for demonstrating this point. This plot shows two 50 MWe supercritical isobutane binary cycles each optimized with GEOTHM for energy cost with six independent state parameters. In one case the well cost is low ($250K each), and in the other the well cost is high. The energy costs are obviously different.

Simply changing this one cost parameter has had profound influence on the thermodynamics of the entire cycle. Each independent state paramenter has changed significantly. The overall cycle efficiency, exchanger pinch points and duties, mass rates, subsystem costs, and plant/field "mix" have all changed. It might also be noted that the brine injection temperature has dropped about 30 F for the high cost wells. If this "brine" had a high dissolved solids content disasterous affects could occur in the injection wells. However, for simplicity here, each design assumed the same constant overall heat transfer coefficients. Had an appropriate brine fouling factor distribution been folded in, the mitigating affect of increased cold end exchanger costs would have reduced the 30 F brine range change.

The previous examples illustrate the complexity of achieving optimized designs with inadequate tools. One parameter sensitivity studies will do the job given enough time (Ref. 3), but the costs are prohibitive. The LBL studies described herein can avoid the pitfalls by allowing GEOTHM to map the entire binary system through seven dimensional space without making apriori judgements for working fluids, heat exchanger pinch points, or thermodynamic state points. This computer code with its directed single purpose overall objective is best suited to reconcile the many complex system parameter trade-offs affecting the optimum design.

ACKNOWLEDGMENT

We gratefully acknowledge the support provided by ERDA-DGE for the continued development of program GEOTHM.

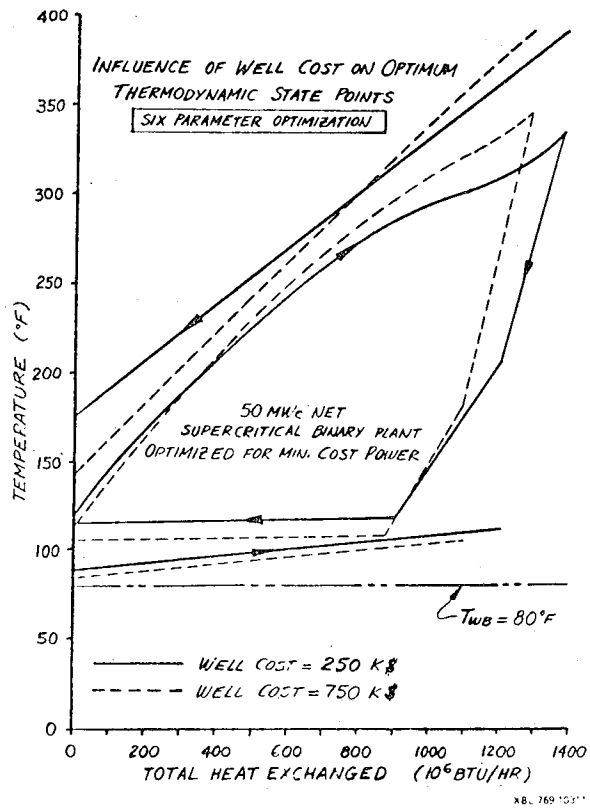

Figure 3. T-Q plots for two energy cost optimized 50 MWe (net) supercritical binary cycles (isobutane). The single parameter change, well cost, has profound influence on the optimimum thermodynamic state points for the entire cycle.

CONCLUSIONS

A program plan has been described to map the performance-cost design surface over various resource and site specific conditions for candidate first generation hydrothermal power plants. Preliminary results illustrate GEOTHM's unique capability to perform the required multiparameter optimizations. This state-of-the-art conceptual design feature will find numerous applications in the more complex future systems which will be required to fully develop the geothermal resource.

REFERENCES

1. M. A. Green, H. S. Pines, "Program GEOTHM, A Thermodynamic Process Program for Geothermal Power Plant Cycles." Presented at the CUBE Symposium at the Lawrence Livermore Laboratory, Oct. 23-25, 1974, LBL-3060, October 1974.

2. M. A. Green, H. S. Pines, "Calculation of Geothermal Power Plant Cycles Using GEOTHM." Presented at the Second United Nations Symposium on the Development and Use of Geothermal Resources, San Francisco, May 19-29, 1975, LBL-3238, May 1975.

3. H. S. Pines and M. A. Green, "The Use of Program GEOTHM to Design and Optimize Geothermal Power Cycles." Presented at the Eleventh Intersociety-Energy Conversion Engineering Conference, Lake Tahoe, Nevada, Sept. 12-17, LBL-4454, June 1976.

4. M. A. Green, H. S. Pines, W. L. Pope, J. D. Williams, "Thermodynamic and Cost Optimization Using Program GEOTHM." Presented at the Geothermal Resources Council Annual Meeting, San Diego, California, May 9-11, 1977.

5. W. L. Pope, M. A. Green, H. S. Pines, J. D. Williams, "Cost Optimization Studies of Geothermal Cycles - A Proposal." Presented at the 4th (and 5th revised) meeting of the Centers for the Analysis of Thermal-Mechanical Energy Conversion Concepts, held at the Lawrence Berkeley Laboratory, Berkeley, California Jan. 24,25, 1977.

6. A. L. Austin, et al., "The Total Flow Concept for Recovery of Energy from Geothermal Hot Brine Deposits." Lawrence Livermore Laboratory, Report UCRL-51366, Livermore, California, April 1973.

7. S. L. Milora and J. W. Tester, Geothermal Energy as a Source of Electric Power, Thermodynamic and Economic Design Criteria. The MIT Press, Cambridge, Massachusetts, 1976.

8. G. K. Olson, et al., "Hydrothermal Electric Power Conversion Systems." Paper No. VIII, presented at the Susanville Geothermal Energy Converence, July 1976.

9. J. H. Eskesen, "Study of Practical Cycles for Geothermal Power Plants." General Electric Company, Corporate Research and Development, Interim Report, April 1976.

10. Holt/Procon, "Geothermal Demonstration Plant Feasibility Study, Energy Conversion Study for EPRI." The Ben Holt Company and Procon Incorporated, Job. No. 7523, April 23, 1976 (4 volumes).

11. The Bechtel Corporation, "Conceptual Design of Commercial 50 MWe (Net) Geothermal Power Plants at Heber and Niland, California." Final Report, SAN-1124-1, UC-66f, October 1976.

12. W. L. Pope, H. S. Pines, J. D. Williams, M. A. Green, "An Investigation of the Energy Cost Resource Utilization Efficiency-Resource Temperature Surface for Geothermal Power Plants." Unpublished report presented at Prof. Kestin's Meeting at Brown University, November 4, 1976, available from the authors, Lawrence Berkeley Laboratory, Berkeley, California.

3. H. S. Pines and M. A. Green, "The Use of Program GEOTHM to Design and Optimize Geothermal Power Cycles." Presented at the Eleventh Intersociety-Energy Conversion Engineering Conference, Lake Tahoe, Nevada, Sept. 12-17, LBL-4454, June 1976.

4. M. A. Green, H. S. Pines, W. L. Pope, J. D. Williams, "Thermodynamic and Cost Optimization Using Program GEOTHM." Presented at the Geothermal Resources Council Annual Meeting, San Diego, California, May 9-11, 1977.

5. W. L. Pope, M. A. Green, H. S. Pines, J. D. Williams, "Cost Optimization Studies of Geothermal Cycles - A Proposal." Presented at the 4th (and 5th revised) meeting of the Centers for the Analysis of Thermal-Mechanical Energy Conversion Concepts, held at the Lawrence Berkeley Laboratory, Berkeley, California Jan. 24,25, 1977.

6. A. L. Austin, et al., "The Total Flow Concept for Recovery of Energy from Geothermal Hot Brine Deposits." Lawrence Livermore Laboratory, Report UCRL-51366, Livermore, California, April 1973.

7. S. L. Milora and J. W. Tester, Geothermal Energy as a Source of Electric Power, Thermodynamic and Economic Design Criteria. The MIT Press, Cambridge, Massachusetts, 1976.

8. G. K. Olson, et al., "Hydrothermal Electric Power Conversion Systems." Paper No. VIII, presented at the Susanville Geothermal Energy Converence, July 1976.

9. J. H. Eskesen, "Study of Practical Cycles for Geothermal Power Plants." General Electric Company, Corporate Research and Development, Interim Report, April 1976.

10. Holt/Procon, "Geothermal Demonstration Plant Feasibility Study, Energy Conversion Study for EPRI." The Ben Holt Company and Procon Incorporated, Job. No. 7523, April 23, 1976 (4 volumes).

11. The Bechtel Corporation, "Conceptual Design of Commercial 50 MWe (Net) Geothermal Power Plants at Heber and Niland, California." Final Report, SAN-1124-1, UC-66f, October 1976.

12. W. L. Pope, H. S. Pines, J. D. Williams, M. A. Green, "An Investigation of the Energy Cost Resource Utilization Efficiency-Resource Temperature Surface for Geothermal Power Plants." Unpublished report presented at Prof. Kestin's Meeting at Brown University, November 4, 1976, available from the authors, Lawrence Berkeley Laboratory, Berkeley, California.

This report was done with support from the United States Energy Research and Development Administration. Any conclusions or opinions expressed in this report represent solely those of the author(s) and not necessarily those of The Regents of the University of California, the Lawrence Berkeley Laboratory or the United States Energy Research and Development Administration.

0 0 0 0 4 5 0 2 2 9 4