LBL-769 c.1
UC-38 Engineering
and Equipment
TID-4500 (59th Ed.)

RECEIVED
LAWRENCE
RADIATION LABORATORY

LIBRARY AND
DOCUMENTS SECTION

FEASIBILITY TESTS FOR A LARGE DIAMETER ROTATING VACUUM CHAMBER

Jack V. Franck, Worley Low, and Robert W. Schmieder

March 1972

AEC Contract No. W-7405-eng-48

LAWRENCE BERKELEY LABORATORY
UNIVERSITY OF CALIFORNIA

For Reference

Not to be taken from this room

LBL-769
c.1

DISCLAIMER

This document was prepared as an account of work sponsored by the United States Government. While this document is believed to contain correct information, neither the United States Government nor any agency thereof, nor the Regents of the University of California, nor any of their employees, makes any warranty, express or implied, or assumes any legal responsibility for the accuracy, completeness, or usefulness of any information, apparatus, product, or process disclosed, or represents that its use would not infringe privately owned rights. Reference herein to any specific commercial product, process, or service by its trade name, trademark, manufacturer, or otherwise, does not necessarily constitute or imply its endorsement, recommendation, or favoring by the United States Government or any agency thereof, or the Regents of the University of California. The views and opinions of authors expressed herein do not necessarily state or reflect those of the United States Government or any agency thereof or the Regents of the University of California.

0 0 0 0 3 8 0 0 0 0 3

FEASIBILITY TESTS FOR A LARGE DIAMETER ROTATING VACUUM CHAMBER*

Jack V. Franck, Worley Low, and Robert W. Schmieder

Lawrence Berkeley Laboratory
University of California
Berkeley, California 94720

March 1972

ABSTRACT

This report describes the initial results of a feasibility study for a large-diameter rotary vacuum chamber with servo controlled angular positioning and readout. The design requirements are: 1) Pressure in 10^{-6} Torr range; 2) Vacuum seal diameter greater than 100 cm; 3) Rotation rate greater than 1 RPM; 4) Absolute angular readout better than 0.001 radian. The present study focused on minimizing servo power and positioning problems caused by friction in rubbing seals and heavily loaded bearings. A departure from conventional design is presented which makes use of two innovations: 1) A statically loaded rotating double lid that eliminates the atmospheric loading on the bearings: 2) Use of a ferromagnetic liquid as a vacuum seal. Model tests have demonstrated the feasibility of the full size chamber.

INTRODUCTION

A large diameter rotating lid vacuum chamber is a classic unsolved design problem. The difficulties stem from the enormous frictional forces in atmospherically loaded bearings and in compressively loaded vacuum seals. For example, a 1 meter diameter lid holding a hard vacuum against one atmosphere is loaded with about 18000 lbf, producing a frictional force in a high quality ball bearing of tens of lbf. Even worse, conventional contact vacuum seals, such as O-ring or chevron types, would produce frictional forces of hundreds, perhaps thousands of lbf., and have stiction, rebound, hysteresis, inhomogeneities, and other undesirable features. The large diameter precludes using labyrinth or other high tolerance gap seals. Use of a small diameter conventional seal in the center of a large diameter lid is precluded in applications where accessibility through the smaller opening is contraindicated or impossible. An internal rotating mechanism is precluded by the necessity to have direct contact to the outside, for instance to a cryostat.

The need for such a chamber is sufficiently large to justify its development. The authors' motivation was the need to provide angular positioning of a liquid-nitrogen-cooled semiconductor x-ray detector with respect to an accelerator beam. In general, angular correlation measurements and spectrometers need large diameter, high precision circles, two requirements which are somewhat mutually exclusive. Other foreseeable uses are in spacecraft and large instruments such as specialized manufacturing tools, vacuum deposition devices, and precision optical mounts.

The largest commercially available rotating lid chamber is the Ortec 2800 series with a 17 inch diameter rotating seal.[1] A recent design at the Lawrence Livermore Laboratory[2] utilizes double O-rings on a teflon ring in a 20 inch diameter seal. Other designs[3] have contributed to various aspects of the problem.

MECHANICAL DESIGN

A schematic of the proposed chamber is shown in Fig. 1. It consists of a cylindrical body rigidly mounted to a support, and two rotating lids held apart by a set of internal spacers, plus vacuum seals and main bearing. When the chamber is evacuated, the atmospheric pressure firmly clamps the lids and spacers into a single rigid unit. The entire atmospheric load is thus borne by the spacers, leaving only the weight of the lids-plus-spacers on the main bearings. In fact, even this weight can be compensated by making the lower vacuum seal diameter slightly larger than the upper. If the upper and lower seals have radii R_1, R_2 respectively, and the lid-spacer assembly weight is W, the net force on the assembly is

$$F = -W - P\pi R_1^{\,2} + P\pi R_2^{\,2} \quad , \tag{1}$$

where P is the atmospheric pressure. Setting this to zero yields

$$R_2 - R_1 = \frac{W}{\pi(R_1 + R_2)P} \quad , \tag{2}$$

as the condition for zero loading on the bearing. For a chamber with $R_1 + R_2 \cong 100$ cm and a weight $W \cong 200$ kgf, a difference $R_2 - R_1 \cong 0.5$ cm would be sufficient to freely float the lids.

In practice, the lower seal might be made somewhat larger than necessary to free-float the lids; weights would be added to adjust the loading on the bearing (or another suitable guide) to any desired amount.

A major disadvantage of this design is the presence of the spacers inside the chamber. These spacers maintain a fixed separation between the lids so that the seals can function. However, they would interfere with appliances and ports entering the chamber through the cylindrical body, at

least at certain angles. Thus, although the lids can rotate 360°, not every angle can necessarily be useful. This is not a problem if there are no side ports, in which case a solid cylindrical spacer can be used.

FERROMAGNETIC LIQUID SEALS

To avoid the disadvantages of conventional seals, the use of a ferromagnetic liquid is suggested. This material consists of a suspension of micron-sized single-domain magnetic particles in a viscous liquid. The particles experience a force in a magnetic field, but unlike the larger particles in the slurry of a magnetic clutch, do not separate or conglomerate. The liquid thus experiences a body force but remains a liquid while magnetized. A drop of low vapor pressure liquid across a narrow magnetic gap can support a hydrostatic pressure differential, and can therefore act as a vacuum seal.

Since the sealant is a liquid, the friction force resisting rotation is only the small viscous resistance. The torque necessary to rotate the seal may be computed from the following formulas:

T = torque (dyne-cm)

$= RF$

R = seal radius (cm)

F = viscous drag force (dyne)

$= \eta\, vA/d$

η = viscosity (poise)

v = velocity (cm/sec)

$= \omega R$

ω = angular velocity (rad/sec)

A = seal contact area (cm^2)

$= 2\pi R.L$

L = seal width (cm)

d = gap spacing (cm)

Putting these all together gives

$$T = 2\pi R^3 \eta \omega L/d \quad .$$

This formula assumes an idealized seal of large radius and rectangular cross section, subject to uniform viscous shear. As a numerical example, a seal of $2R = 100$ cm diameter, having ten stages of width 0.05 cm ($L = 10 \times 0.05 = 0.5$ cm), gap $d = 0.01$ cm rotating at $\omega = 0.01$ rad/sec, using a liquid with viscosity $\eta = 1$ poise would require a torque $T \cong 4 \times 10^5$ dyne-cm $\cong$ 5 in-ozf.; i.e. a force at the periphery of about 1/4 ozf. In a chamber containing two seals for top and bottom lids (four total) the total viscous force is about 1 ozf. Since the bearing friction force can be made arbitrarily small consistent with adequate tracking (say a total loading of 100 lbf, generating a frictional force of about 0.07 lbf or $\sim$ 1 oz), we conclude that the total force (at the edge) necessary to rotate a 1 meter diameter chamber against a hard vacuum at 0.1 RPM is about 2 ozf., or the weight of about 50 grams.

It is important to note that the viscous torque decreases linearly with the angular velocity ω, and is zero at $\omega = 0$. There is thus no starting friction associated with the seal.

Ferromagnetic liquids with a range of properties are commercially available from Ferrofluidics Corporation.[4] Many interesting and unique properties of this material are described in various articles,[5] and some technical data is available from the company. The liquid bases available are water, kerosene, silicone, and fluorocarbon. Specific gravity ranges from 0.95 to 2.36, viscosity ranges from 0.6 to 2×10^5 centipoises, saturation magnetizations range from 100 to 600 gauss, and prices range from \$0.20 per cc (in bulk) to over \$198.00 per cc.

Ferrofluidics uses a proprietary liquid in a commercial rotary vacuum feed-thru.[6] The liquid has a saturation magnetization in the range 300-400 gauss, specific gravity in the range 1.3-1.4 and a viscosity near 5 poise, at 20% vapor pressure below 10^{-8} Torr. The seal is made by holding the liquid at the tips of a row of circular ridges, with a gap of a few mils to the flat pole face of the permanent magnet. A schematic of a typical seal is shown in Fig. 2. The commercial unit is claimed to be mass spectrometer leak tight below 10^{-11} std cc/sec of He.

An estimate of the holding force of the liquid seal may be obtained from the following formula for the pressure P developed across the surface of the liquid in a longitudinal magnetic field.[7]

$$P = \frac{M_s^2}{4\pi\chi} \left[e^{-\chi H/M_s} + \frac{\chi H}{M_s} - 1 \right] , \qquad (3)$$

where P is in dynes/cm^2 and

M_s = saturation magnetization of the liquid (gauss),

H = applied field (oersted),

χ = susceptibility at $H = 0$.

At very high fields,

$$P \cong \frac{1}{4\pi} M_s H \quad . \qquad (4)$$

For M_s = 400 gauss, H = 10 kOe, we find $P \cong 3.3 \times 10^5$ dyne/cm^2 $\cong$ 0.30 atm. This value will be modified by surface tension and specific geometry, and the properties of the liquid.

In the commercial feed-thru a parallel array of ten to twenty seals is used, each stage holding about 0.1 atm. The differential pressure each stage can support decreases rapidly with increasing gap. Producing a gap of a few mils on a 1 meter diameter and maintaining it during rotation is a mechanical and economic problem of some magnitude. It is easily appreciated that if the gap could be increased, the difficulties would be significantly reduced. With this as the primary goal, a testing program was initiated.

STATIC SEAL TESTS

The experimental work was carried out in two steps: First a vacuum vessel with a 6 cm diameter adjustable static seal was built and tested. From the experience gained on this unit, a second chamber with a 25 cm diameter rotatable seal was built and tested.

The static seal apparatus is shown in Figs. 3a, b. The vessel was cut from a single piece of iron. A row of ten concentric teeth (see detail) was machined on the cylindrical end; the proximity of these teeth with a flat plate formed the seal. The pressure between each pair of teeth could be measured via a small access hole. The gap spacing was maintained by three differential screws producing mils/rev displacement. Increments of 0.1 mils were measurable by means of three nonmagnetic finger dial indicators. The entire vessel could be inserted between the poles of 3 inch electromagnet providing fields up to about 12 kgauss. Vacuum was provided initially by a mechanical pump, later by a small oil diffusion pump. No special effort was made to reduce the pressure below 10^{-4} Torr, since any pressure below 10^{-2} Torr is essentially zero so far as the mechanical strength of the seal is concerned.

A 10 cc sample of vacuum grade liquid was purchased from Ferrofluidics Corporation at $40 per cc. It was identified with the number F-155A, and its saturation magnetization was given as 415 gauss. Handling the liquid poses no problems. It resembles dirty engine oil, and was merely spread on the seal teeth with a brush. The liquid should cover the entire tips of the teeth, but need not be perfectly uniform since it redistributes itself under load. The quantity of liquid used ranged between 0.018 and 0.12 grams per linear inch of seal.

The initial test consisted of setting the gap to a few mils and observing the pressure distribution across the seal as the internal chamber pressure was lowered. Fig. 4 shows a typical profile. The individual stages spontaneously fail when the pressure differential reaches a critical value dependent on the field, the gap, the liquid properties, the tooth design, etc. This spontaneous failure serves to produce a nearly linear pressure gradient across the seal.

Next the gap size was varied, and the pressure profile recorded. Fig. 5 shows results from a typical sequence.

The adjustment of the various stage pressures could be observed as the gap was increased. These changes generally followed the predicted course, but often occurred erratically, sometimes hours after the gap change. Such delayed reaction may be due to slow migration of the fluid, with eventual failure. Failure of the seal was defined as failure of the last stage, implying that the overall gradient is too large and a gas flow exists. The largest gap attained before failure was 9.5 mils. Sixteen tests were made in the 8 to 9 mil gap range, at various magnetic fields. These seals held vacuum for times ranging from 1-8 hours, the periods being terminated for reasons other than failure.

The next test involved tilting the seal to make the gap on one side larger than the other. This was done by adjusting the three support screws independently. In two tests, one side of a 6 mil gap was reduced by 1 mil without vacuum failure. It is possible that over a long time, the field gradients would cause the liquid to migrate, hastening seal failure.

Finally, the gap just before failure was measured for several values of the field and several quantities of liquid in the seal. The data, shown in Fig. 6, are only qualitative, but do tend to support the notions that

more liquid and larger field tend to permit larger gaps, but that a saturation of each quantity sets in eventually. Long term stability of very large gaps is not known.

A noticeable feature of each test was the deposition of liquid on the inner surface of the vacuum vessel. We suspect that failure of a stage at overpressure is accompanied by some spraying. This effect could pose a problem for cycling a seal many times.

ROTATING SEAL TESTS

In order to test a larger seal under rotation, the vessel shown in Figs. 7a, b, was built. It has two concentric seals roughly 25 cm in diameter, each with 10 stages. The tooth design was the same as the static seal (Fig. 4). The magnetic field was provided by a radial array of 27 U-shaped permanent magnets[8] having a pole-tip field of 13 kgauss. The atmospheric load was borne by a single "X" type ball bearing, ABEC Grade 3, installed with a preload. The seal gap was varied by inserting shims between the chamber and the bearing.

The testing procedure was similar to the static tests: Beginning with a small amount of liquid the gap was increased until the seal would not hold reliably. Then more liquid was added and the gap increased until failure. As before, the tests indicated that more liquid permitted larger gaps, but that a limit is reached that depends on the magnetic field. In the test with both vessels, the final amount of liquid used was about .12 gr per inch of 10 stage seal.

The rotation was done by hand, while recording the pressure in the chamber. Temporary pressure rises occurred when rotating after being at rest or when reversing rapidly. These changes were typically from 10^{-4} to 10^{-3} Torr, and lasted for a few seconds before returning to the original pressure, presumably the pump out time. Reversing the motion typically changed the pressure from 2×10^{-4} to 5×10^{-4} Torr.

Starting and running torques were measured to be between 20 and 70 in-lbf with vacuum load, which is consistent with the atmospheric loading on the bearing and no significant contribution from the seal.

CONCLUSIONS FROM THE TESTS

The success of the 25 cm rotating seal strongly indicates the feasibility of a 1 meter chamber. Scaling up will, however, produce some new mechanical problems, mainly associated with maintaining the gap. Our tests show that a gap of 6 mils with a 2 mil tolerance would be reliable, but this requirement may seriously complicate the mechanical design. It would be a definite advantage to increase the gap, say to 10 or 12 mils. Several ideas have been suggested for attaining larger gap:

1. Thickening the liquid by evaporation or centrifuging should increase its saturation magnetization, hence its pressure holding capability, which should more than compensate for the undesirable increase in viscosity.
2. A different tooth geometry may better resist blowout failure. In particular, an asymmetric tooth, oriented with respect to the pressure gradient may be advantageous. A wide flat tooth may support more liquid, consistent with its surface tension.
3. Controlling the pressure gradient is likely to help. Failure occurs when the stage carrying the largest pressure differential fails. Although during the approach to failure the stages may adjust to near equibars, the adjustments may be characterized by significant overpressures, resulting in premature failure. If the individual stages are regulated to produce a linear gradient, this effect should be minimized.

PRELIMINARY FULL SCALE DESIGNS

Three preliminary designs for a 1 meter chamber were developed. All three used permanent magnets but could accommodate electromagnets as an alternative. The design gap would be 6 mils ± 2 mils. Commercial precision bearings would be used. These three designs are shown in Figs. 8a, b, c.

Design (a) has an outer housing made by stacking rings of magnetic and non-magnetic material in the proper sequence forming two annular pole tips at the top of the chamber and two at the bottom. O-rings and bolts finish the unit into a permanent vacuum tight assembly. Bearing O.D. fits and pole tip teeth are machined into the unit during one machine set-up, thus minimizing rotational eccentricity errors between these critical functions. With the teeth diameter established, a mating spool with the proper gap clearance can be made. This second piece forms the magnet return path and acts as the inside lid spacer. Again as on the first assembly, bearing areas and pole area diameters are produced in the same set-up. A single four point contact bearing or a double angular bearing set may be used as guide bearings. Fluid loading holes are drilled into the housing and fluid splatter shields are added to the inside. Slotted openings are provided in the sleeve and ports are provided in the housing for center access. The housing is stationary while the sleeve and lids are rotated through a ring gear or similar device. Permanent magnets placed radially around the housing bridging the pole tips, or an electro-magnet made by winding wire between the pole tips complete the magnetic circuit. Some criticisms of this design are that it is a "locked-in" design. No flexibility is permitted for repair or adjustment if teeth are damaged while assembling. Also, there is a total dependence on precision shop work and fitting for success.

Design (b) is similar in construction to (a) except the pole pieces are turned 90° with the magnetic return piece placed in the lids. This design allows adjustment of the gap by shimming. Pole pieces in this arrangement allow some limited repair and inspection when compared to design (a). Disadvantages are that the magnetic geometry is poor, there are more pieces, and the parts are more difficult to produce than design (a).

Design (c) has two horizontal seals on top and two on the bottom. The pole tips are two co-axial magnetic rings with a non-magnetic separator in between. Sets are bolted together with O-rings and form flanges on the top and bottom of a tubular body that is the outside wall of the vessel. An inner sleeve acts as the spacer for over-size lids that cover the pole tip flanges. Mounted to the lid in the area between the flange and the lids is a flexible flux return member that holds the fluid and forms the vacuum seal. The flexible member is to accommodate any waviness in the flange which will be present from machining. Abrupt changes in plane are not expected in the parts; however, smooth changes in plane of $\pm$ .010" is reasonable. Maximum circumferential out of flatness of .002"/ft. would be desirable. This device is able to rotate with the lids and can keep a predetermined gap between itself and the pole tips. The gap is maintained by balls or rollers rolling against the pole tip and the flexible return path member. This flexible member may consist of a circular ferrous band, with a cross section that is thin and limber in horizontal plane but large enough to handle the flux, attached to an expansion member that allows movement in the vertical direction and is vacuum tight. The force required to flex the band may come from an inflatable gasket, tube, atmospheric pressure, etc. This

flexible seal approach isolates the precision machining to the smaller dimensions of the assembly and requires close tolerance only where the balls roll. Friction loads from the gap maintaining elements may be undesirable.

SHELF LIFE OF MAGNETIC LIQUIDS

Based on the fact that the magnetic liquid consists of polymer coated particles in a viscous liquid, we expected an unlimited shelf life. However, two observations may indicate this is not so. The first was that a sample of liquid (not the vacuum grade material) in a sealed plastic container called "Ferrofluidler" (trademark of Ferrofluidics Corporation) became clouded and lost its magnetic properties after a few months. This may have been due to oxidation of the iron particles to a nonmagnetic compound. The second observation was that the liquid in the seal of the 25 cm test chamber, after undisturbed storage at atmospheric pressure and room temperature for six months, had become thick and cakey, like old overheated engine grease. This may also be due to oxidation. Together, these observations indicate the shelf life of unprotected liquid may be a few months.

ACKNOWLEDGMENTS

David Gumz and Marcel Vanderbeck assisted substantially in the testing program. Paul Broadhead and Alex Babin contributed design ideas for the full size chamber. Drs. R. E. Rosensweig and R. Moskowitz of Ferrofluidics Corporation graciously provided some technical data on their vacuum grade liquid.

Work was done under the auspices of the U.S. Atomic Energy Commission.

REFERENCES AND FOOTNOTES

1. Ortec, Inc., 100 Midland Road, Oak Ridge, Tennessee 37830.
2. G. Tirsell, private communication.
3. D. E. Armstrong, N. Blais, Rev. Sci. Inst. 34, 440 (1963); H. R. E. Tjin a Djie, F. J. Van de Heer, L. A. Ch. Koerts, Nucl. Inst. Methods 9, 172 (1960); W. R. Dodge, J. A. Coleman, S. R. Domen, Nucl. Inst. Methods 42, 181 (1966); R. A. Hawrylah, D. Cline, D. F. Grube, Nucl. Inst. Methods 36, 237 (1965); M. A. Hague, O. H. Holzer, A. Hossain, A. Sabir, A. K. M. Siddig, Nucl. Inst. Methods 47, 137 (1967).
4. Ferrofluidics Corporation, 144 Middlesex Turnpike, Burlington, Mass. 01803.
5. R. E. Rosensweig, The Encyclopedaedic Dictionary of Physics, Pergamon Press (1970), pp. 111-117; Industrial Research, October 1970, pp. 36-40; Internat. Sci. and Tech., July 1966, pp. 48-56; Rosensweig, G. Miskolczy, F. D. Ezekiel, Machine Design, March 28, 1968, pp. 145-150.
6. Product Engineering, March 30, 1970, p. 52.
7. See last entry in Reference 5.
8. Permag Corporation, Jamaica, New York, Model #H-111, PMPA #PA-1048.

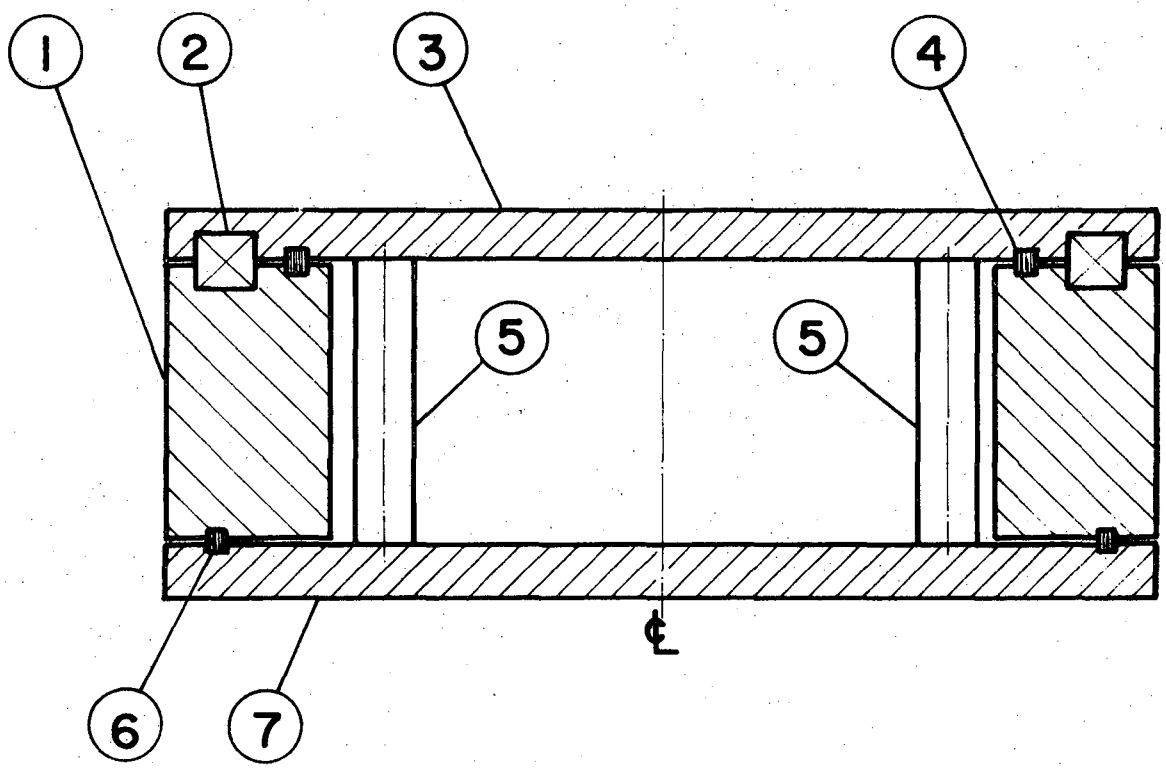

XBL 722-119

Fig. 1

Schematic of the chamber: 1) Cylindrical body rigidly mounted to the laboratory; 2) Main bearing; 3) Upper lid; 4) Upper vacuum seal; 5) Internal spacers; 6) Lower vacuum seal; 7) Lower lid

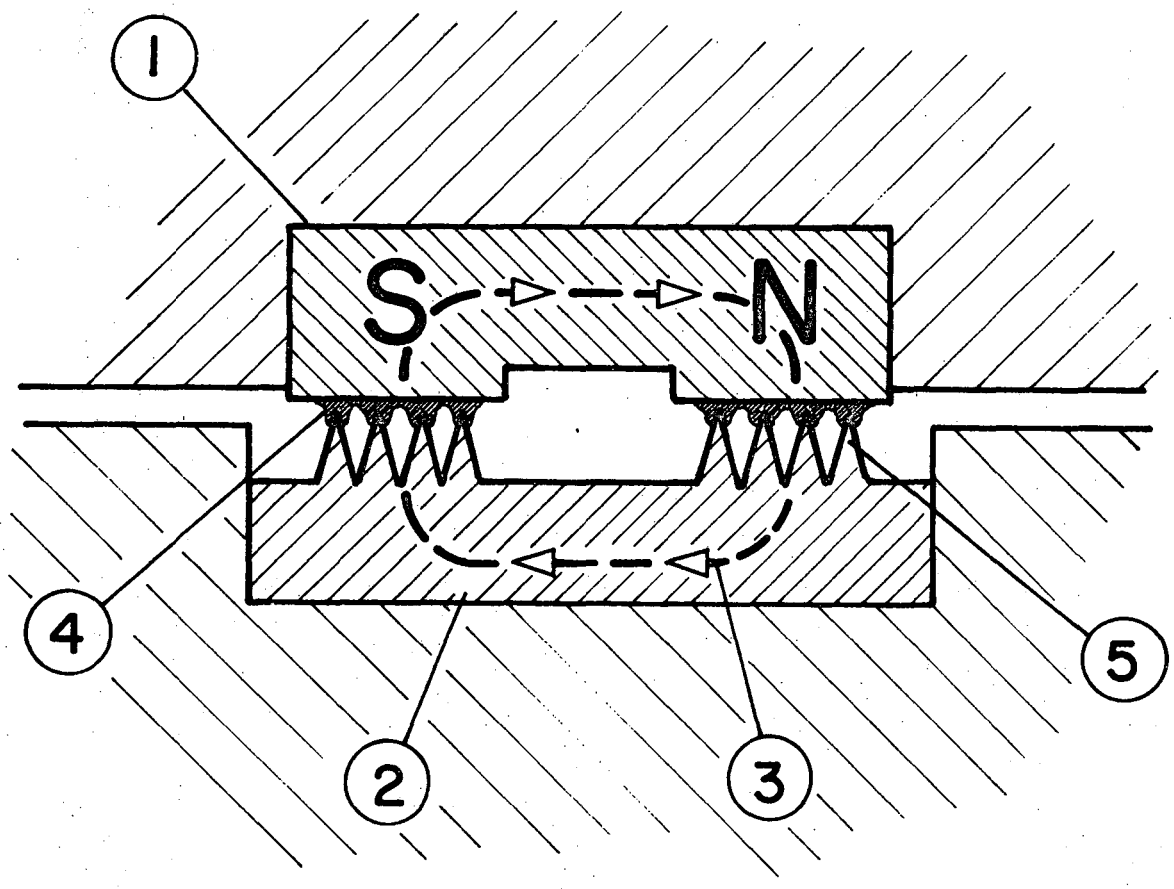

XBL 722-120

Fig. 2

Schematic of a ferromagnetic liquid vacuum seal: 1) Magnet with flat pole faces; 2) Keeper for flux return path; 3) Path of magnetic flux; 4) Ferromagnetic liquid sealant; 5) Sharp teeth on keeper. THIS DIAGRAM IS SEVERELY SCALE-DISTORTED FOR CLARITY

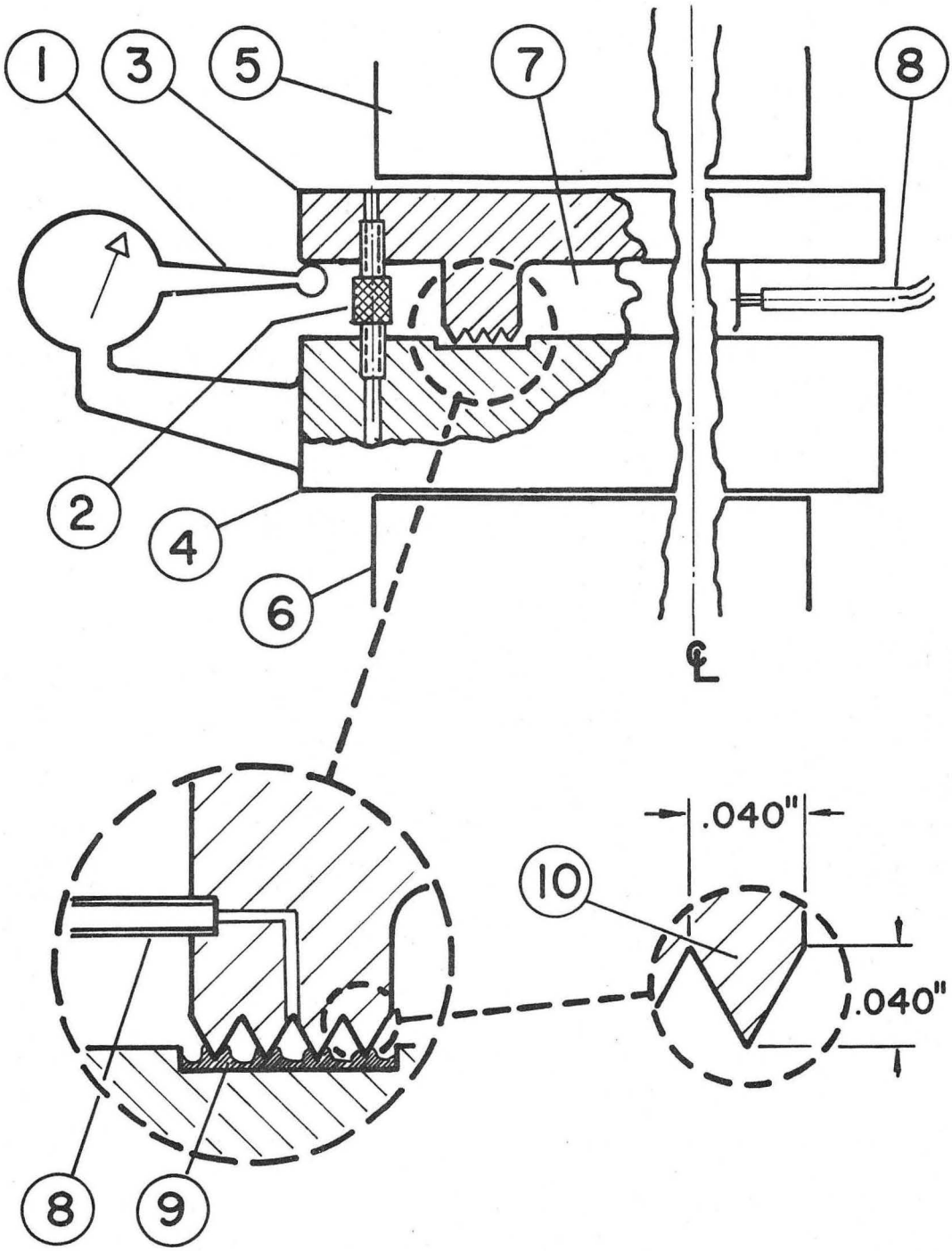

XBL 723-568

Fig. 3a

Schematic of the 6 cm diameter static test chamber: 1) Finger dial indicator; 2) Differential screw gap spacer; 3) Upper chamber body; 4) Lower chamber body; 5) and 6) Magnet pole faces; 7) Vacuum region; 8) Tube to pressure monitor; 9) Magnetic liquid in trough; 10) Tooth (one of ten)

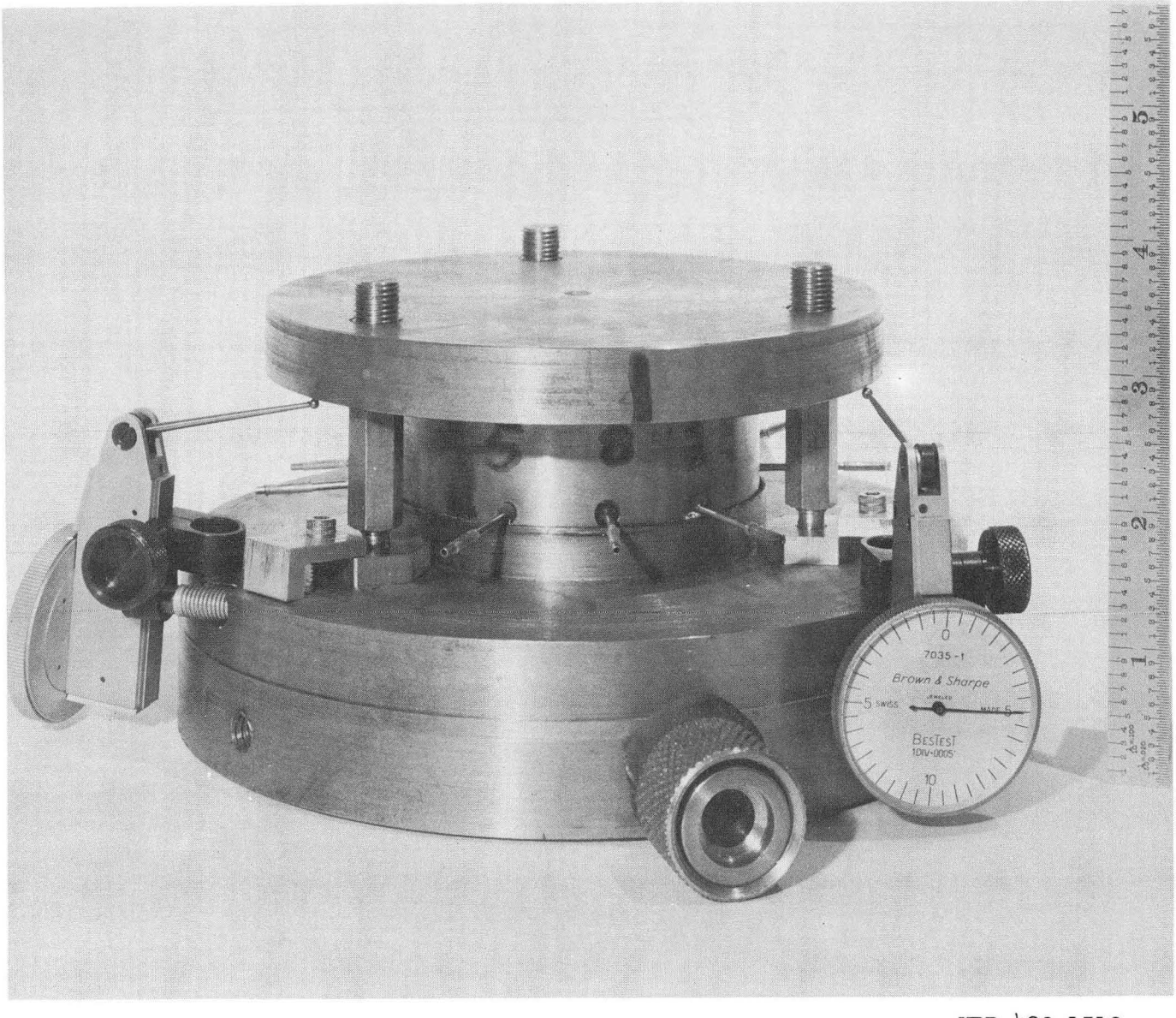

XBB 423-1513

Fig. 3b

Static test chamber. Numbered items are identified in Fig. 3a

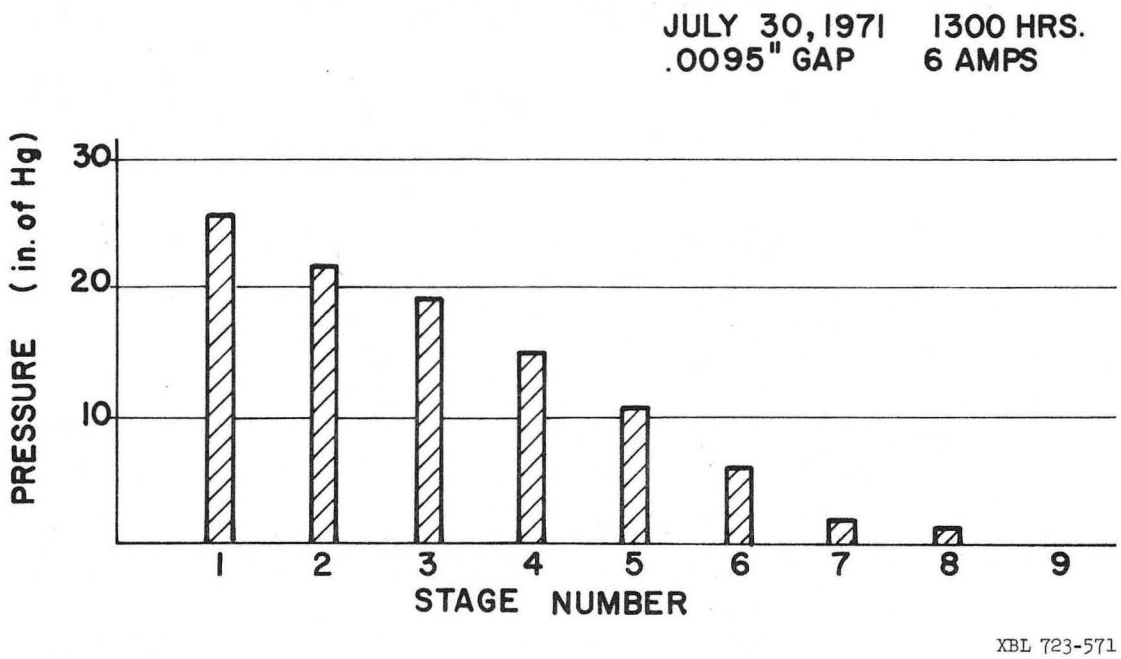

Fig. 4

Pressure in various stages across the static seal

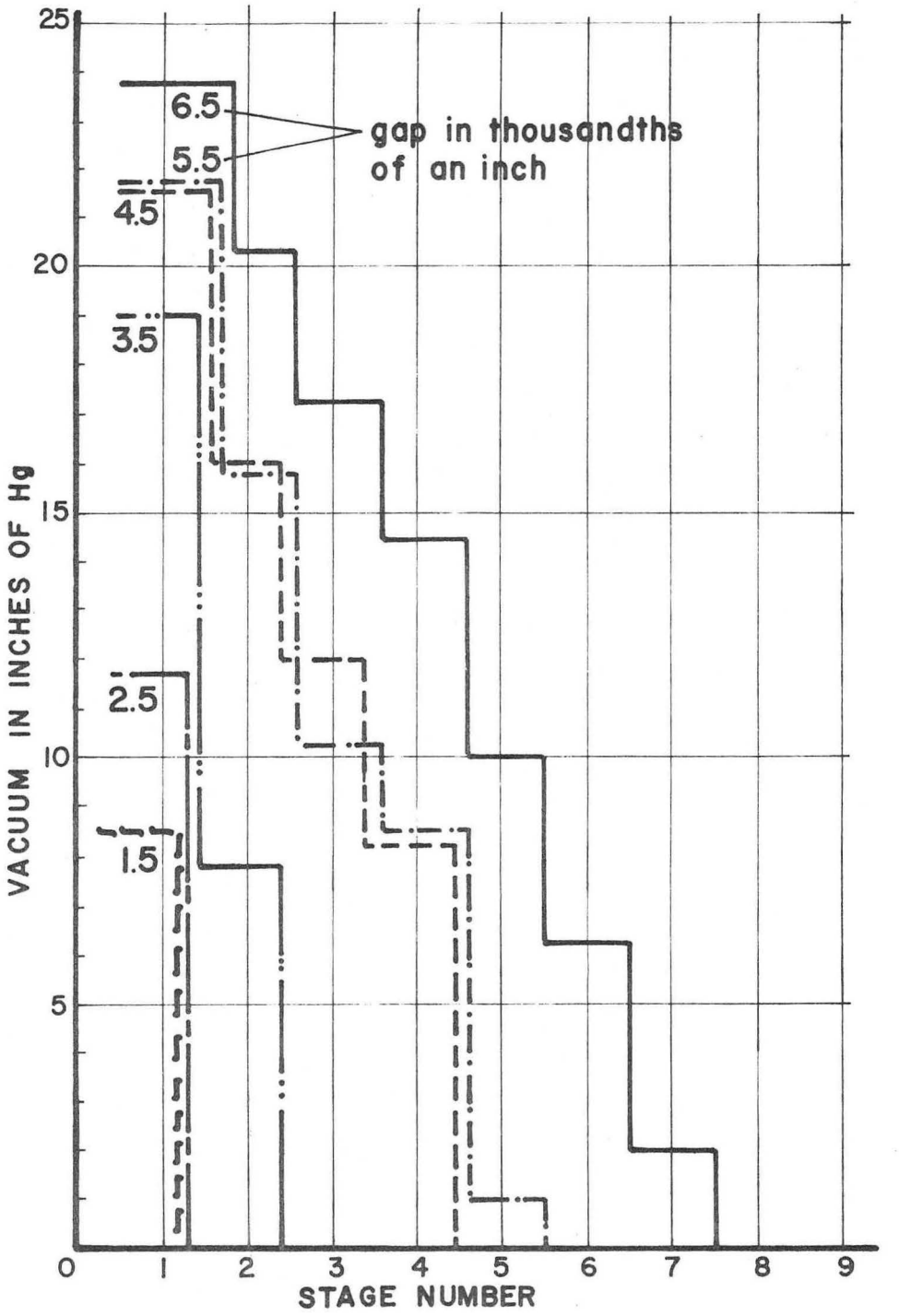

XBL 723-570

Fig. 5

Vacuum profile across static seal, for various gaps

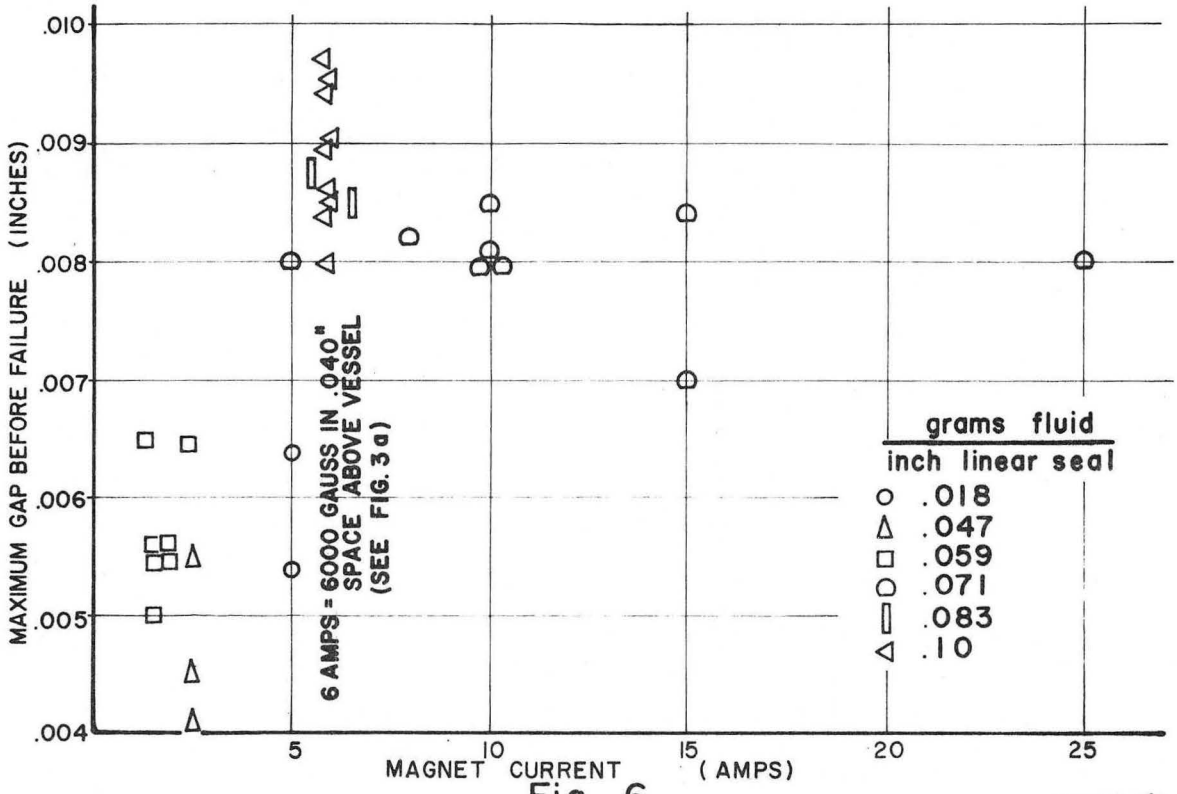

Fig. 6

XBL 723-569

Gap before failure versus applied magnetic field

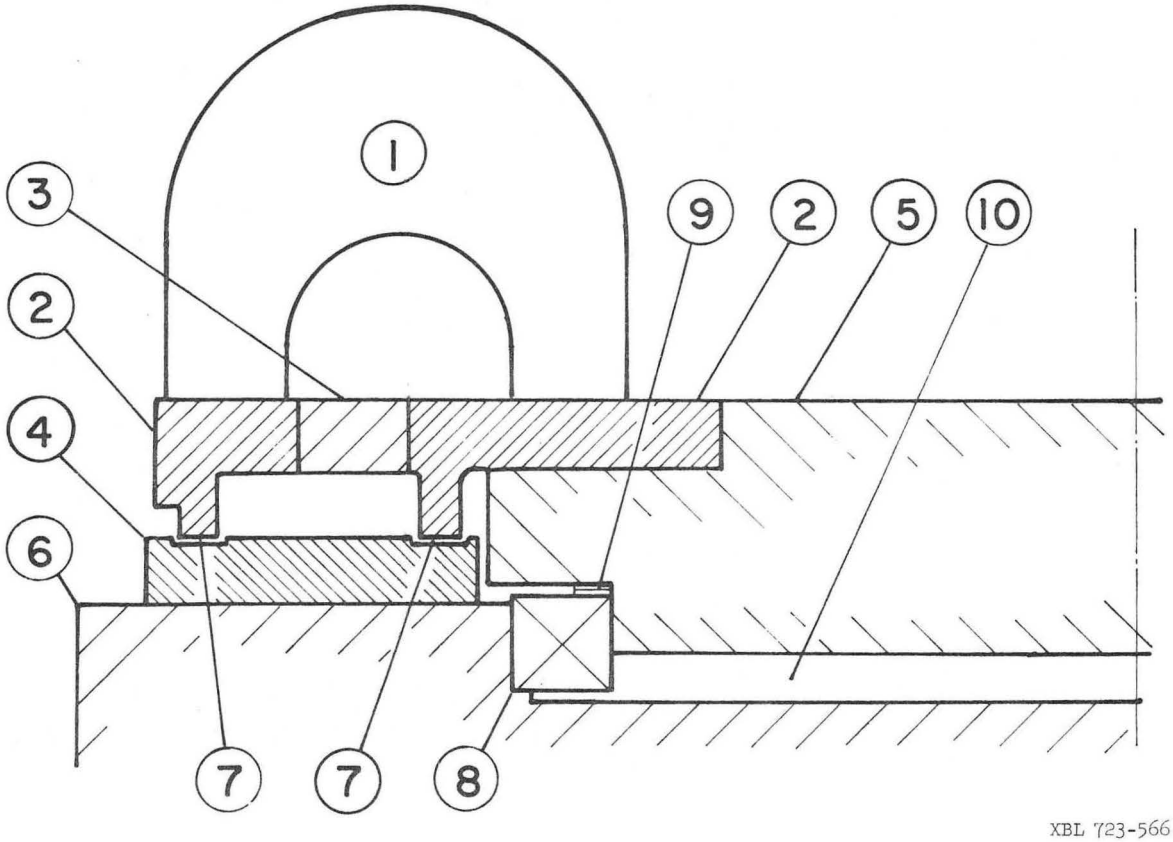

XBL 723-566

Fig. 7a

Schematic of 25 cm diameter rotating vacuum test chamber:
1) Permanent magnet; 2) Iron pole piece; 3) Nonmagnetic insert;
4) Iron keeper and liquid retainer; 5) Upper plate non-magnetic;
6) Lower plate non-magnetic; 7) Seals (two concentric about centerline); 8) Main bearing; 9) Shims for adjusting seal gap;
10) Vacuum space THIS DIAGRAM IS TO SCALE

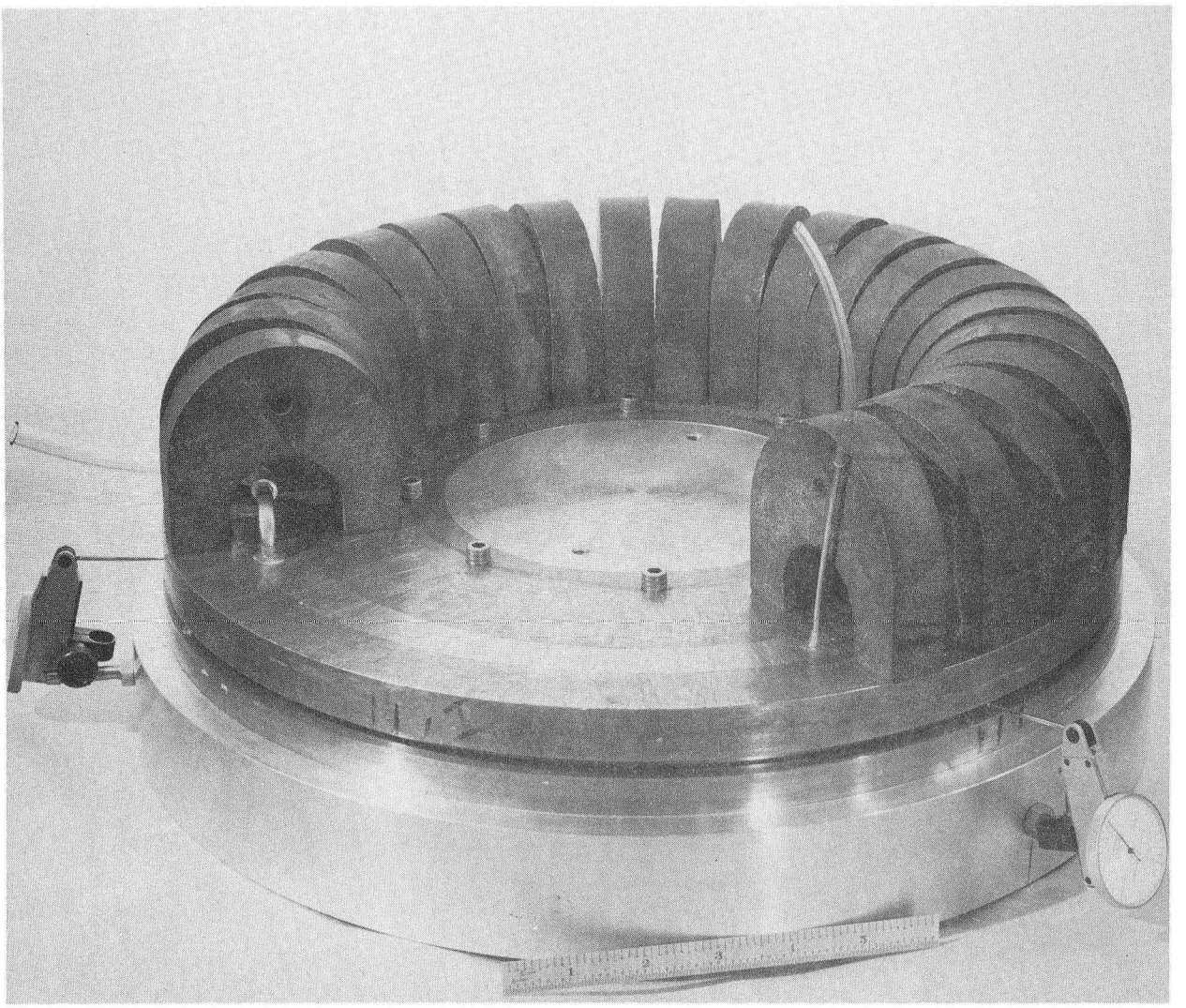

XBB 723-1515

Fig. 7b

Rotating vacuum test chamber

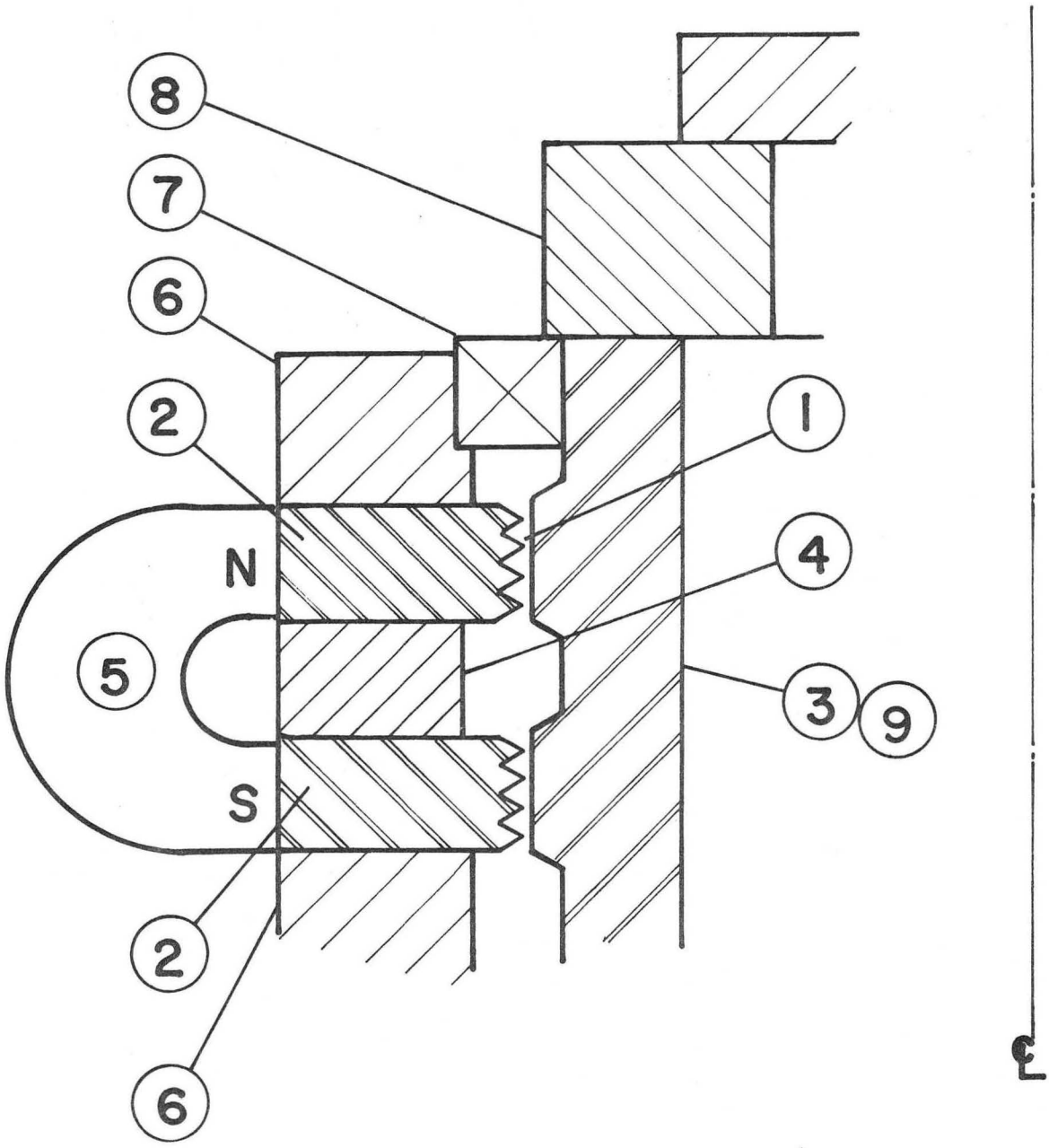

XBL 723-565

Fig. 8a

Schematic of proposed 1 meter diameter rotating vacuum chamber: 1) Seal; 2) Iron pole pieces; 3) Iron keeper; 4) Non-magnetic spacer; 5) Magnet; 6) Non-magnetic supports; 7) Main bearing; 8) Upper lid; 9) Interior chamber wall (cylindrical)

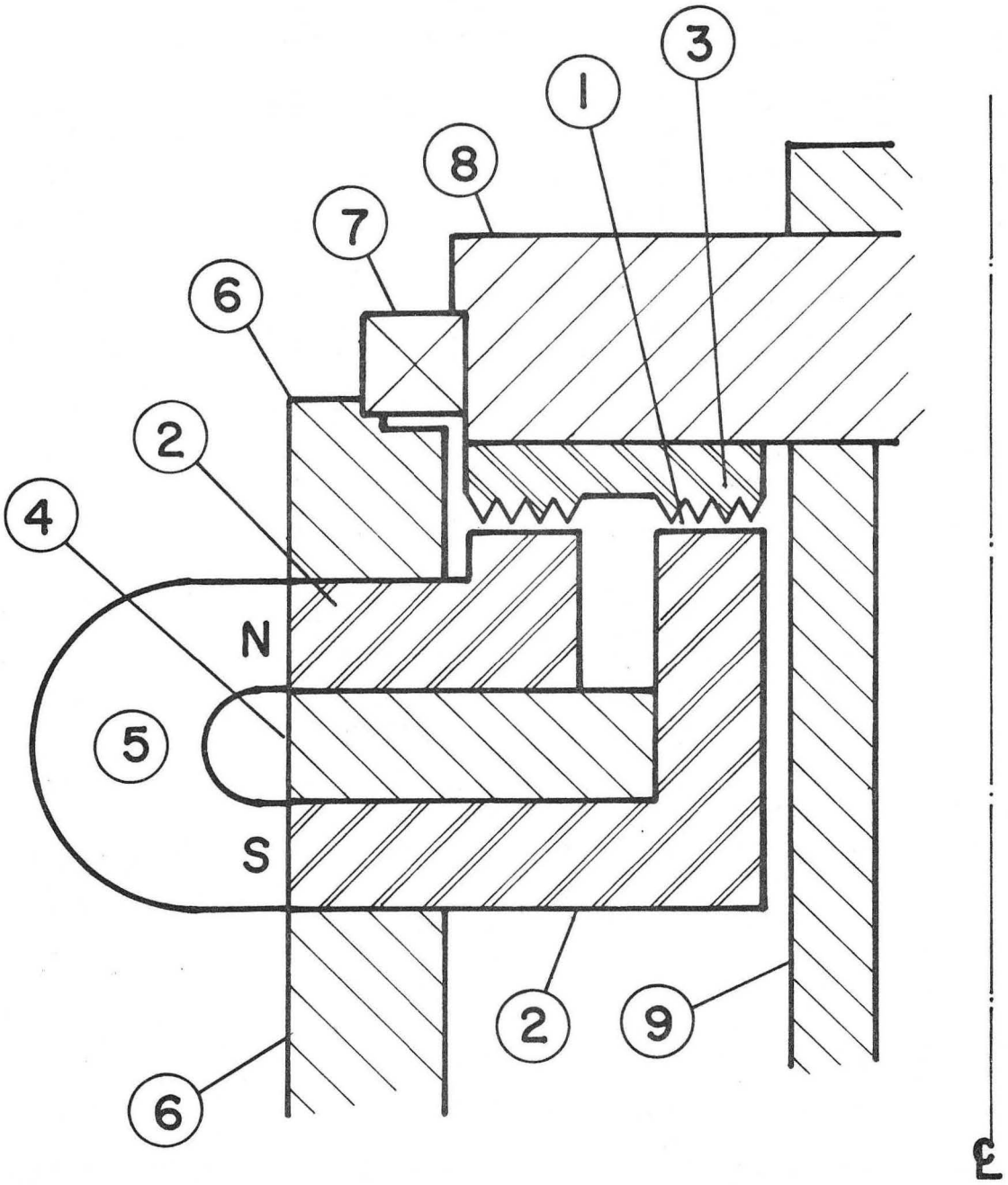

XBL 723-564

Fig. 8b

Same as Fig. 8a. The components have the same identification as that figure

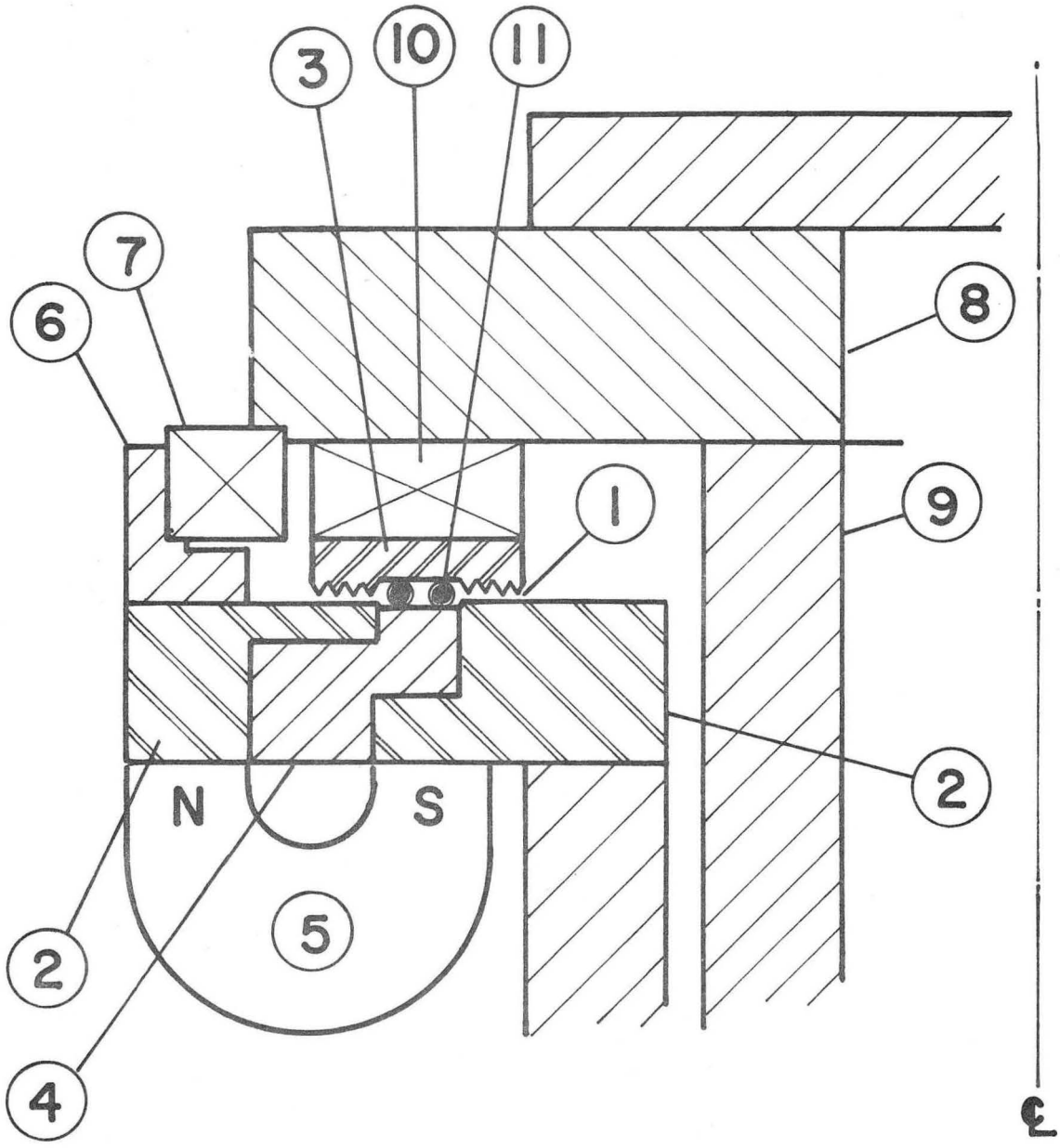

XBL 723-567

Fig. 8c

Same as Fig. 8a. The components 1 - 9 are identified in Fig. 8a; 10) Flexible expansive member for compressing seal; 11) Secondary bearings for maintaining accurate seal gap

LEGAL NOTICE

This report was prepared as an account of work sponsored by the United States Government. Neither the United States nor the United States Atomic Energy Commission, nor any of their employees, nor any of their contractors, subcontractors, or their employees, makes any warranty, express or implied, or assumes any legal liability or responsibility for the accuracy, completeness or usefulness of any information, apparatus, product or process disclosed, or represents that its use would not infringe privately owned rights.

TECHNICAL INFORMATION DIVISION
LAWRENCE BERKELEY LABORATORY
UNIVERSITY OF CALIFORNIA
BERKELEY, CALIFORNIA 94720