LBL-7835
c.2

RECEIVED
LAWRENCE
BERKELEY LABORATORY

SEP 7 1978

LIBRARY AND
DOCUMENTS SECTION

TWO-WEEK LOAN COPY

This is a Library Circulating Copy
which may be borrowed for two weeks.
For a personal retention copy, call
Tech. Info. Division, Ext. 6782

Energy and Environment Division

Interaction Of Organic Solvent With A Subbituminous Coal Below Pyrolysis Temperature

David Lindsey and E. A. Grens

M.S. Thesis

June 1978

Lawrence Berkeley Laboratory University of California/Berkeley
Prepared for the U.S. Department of Energy under Contract No. W-7405-ENG-48

LBL-7835
c.2

LEGAL NOTICE

This report was prepared as an account of work sponsored by the United States Government. Neither the United States nor the Department of Energy, nor any of their employees, nor any of their contractors, subcontractors, or their employees, makes any warranty, express or implied, or assumes any legal liability or responsibility for the accuracy, completeness or usefulness of any information, apparatus, product or process disclosed, or represents that its use would not infringe privately owned rights.

INTERACTION OF ORGANIC SOLVENT MIXTURES WITH A SUBBITUMINOUS COAL BELOW PYROLYSIS TEMPERATURE

Contents

Abstract v

I. Introduction 1

Coal Liquefaction 1

Previous Work 2

Scope 8

Nature of Results 9

II. Experimental Studies. 10

Equipment 11

Coal and Solvents Studied 13

Procedure 15

Coal and Solvent Preparation. 15

Extraction. 16

Treatment of Extract Solution 17

Coal Residue Treatment. 18

Yield Determination 18

Characterization of Extract and Residue 19

Elemental Analysis. 19

Vapor Pressure Osmometry. 20

Gel Permeation Chromatography 20

III. Results and Discussion. 21

Experimental Performed. 21

Principal Results 23

Solvent Retention 24

Effect of Solvent Composition on Yield. 26

Characterization of Extraction Products 31

Molecular Hydrogen to Carbon Ratio. 32

Molecular Weight of Extract 32

Gel Permeation Chromatography 33

IV. Conclusions 35

Acknowledgments 36

Appendix A. Solvent Incorporation in Extraction Products. 37

References. 41

Tables 43

Figures 48

INTERACTION OF ORGANIC SOLVENT MIXTURES WITH A SUBBITUMINOUS COAL BELOW PYROLYSIS TEMPERATURE

David Lindsey

Energy and Environment Division
Lawrence Berkeley Laboratory
University of California
Berkeley, California 94720

ABSTRACT

The interactions of a subituminous coal with certain binary organic solvent mixtures have been studied at 250°C. Mixtures of pyridine, quinoline, piperidine, tetrahydroquinoline, and ethylenediamine with either toluene or tetralin were contacted with coal in a successive batch, stirred reactor, the extractions being carried to near completion. Two distinct behaviors of extraction yield as a function of composition have been identified. In the majority of the solvent mixtures the extraction yield increases linearly with increasing concentration of the more active solvent. When the active solvent is ethylenediamine however, the extraction yield increases rapidly when small concentrations of ethylenediamine are used but then levels out close to its maximum value in a 50-50 mix. This behavior is an indication that, except in the case of ethylenediamine, the activity of solvent mixtures is a function of bulk solution properties.

I. INTRODUCTION

There is no longer a question that the vast resources of coal in the United States must be utilized to meet our future energy needs. One important use of coal is the conversion to liquid fuels, and an variety of coal liquefaction processes are currently being developed. These processes vary in operating conditions and contacting schemes, but they all involve the use of organic liquids. Therefore, a key to the development of coal liquefaction processes is the understanding of coal/organic liquid interactions. The purpose of this work has been to study the interaction of organic solvent mixtures with coal.

Coal Liquefaction

Coal liquefaction processes involve three main steps: (1) contacting of the coal, organic liquid, and catalyst (if used) at elevated pressure and temperature. (2) Separation of solids (coal residue) from the liquid phase. This involves the use of conventional equipment such as filters, centrifuges, or cyclones. (3) The separation of the coal liquid product from the organic liquid phase. This is normally accomplished by distillation, often at reduced pressure. The coal derived liquid may then be further processed and upgraded for its end use, the recovered solvent recycled, and the coal residue used as boiler fuel.

Non-catalytic processes generally use high boiling solvents that aid coal pyrolysis. When a homogeneous catalyst is used, a solvent can be used to shuttle hydrogen to the coal or it can depolymerize the coal and open the pore structure to allow greater contact with the catalyst. High temperatures (above 350°C) are most often used;

however, a process which would be effective at lower temperatures would have many advantages.

Clearly organic solvent interactions with coal play an important role in any liquefaction process. The objective of this work is to study the interactions of organic solvent mixtures with a subbituminous coal below the pyrolysis temperature. Coal/solvent interactions have been the subject of many previous studies, usually in Soxhlet type contactors. The Soxhlet arrangement involves the vaporization of a solvent from a vessel to a reflux condenser, from which it is more or less continuously drained over a coal sample. The extracted material is carried back into the solvent vessel. This type of device is convenient for contacting pure solvents and coal, but cannot be used to study mixed solvents effectively. For this reason, solvent mixtures have not been studied extensively. The limited work available shows that in some cases solvent mixtures can be more effective than pure solvents in solubilizing coal.

Previous Work

Early studies of solvent/coal interactions, dating back to the beginning of the century, were completed by extracting coal in Soxhlet contactors, run at atmospheric pressure. The solubility of coals of various ranks in a variety of solvents were studied in this way. Of primary concern to these early investigators was the amount and character of the extracted material.

From these studies, broad types of interactions were hypothesized. in 1951, Oele and co-workers divided organic solvents into the categories of non-specific, degrading, reactive and specific, based on the different

types of interactions.[1] Unfortunately, these classifications are often ambiguous any may not reflect fundamental properties of the coal/solvent interaction, but they do provide a means of organizing previous work on coal/solvent interactions.

The main characteristics of a non-specific solvent are held to be its inability to extract a significant amount of coal. In 1951, Dryden identified low boiling hydrocarbons such as benzene, ethanol, and acetone as non-specific solvents.[2] The coal extracts obtained from these solvents generally have a high molecular hydrogen to carbon ratio, about 1.6, and low number average molecular weights, less than 600. The extraction yield of a bituminous coal was found to be a strong function of temperature by Ashbury, but even at temperatures approaching 300°C, the yields are relatively low.[3]

Solvents identified as degrading are high boiling aromatic hydrocarbons in which coal can be pyrolyzed and which thus appear to be effective solvents at high temperatures. Phenanthrene is an example of a degrading solvent. It is postulated that these solvents act as a vehicle for thermal cracking of the coal into smaller more soluble species. This claim was supported by Orchin who used phenanthrene at 350°C to extract 90% of a bituminous coal and recovered the solvent quantitatively in high purity.[4]

The most common type of reactive interaction is hydrogen donation from the solvent to the coal or, usually, to coal pyrolysis products. The main feature of this type of solvent is the presence of hydrogen atoms that may be removed fairly easily. Thus hydroaromatic compounds such as tetrlin or tetrahydroquinoline are good hydrogen donor solvents.

The hydrogen transfer process is postulated to take place between thermally-formed free radicals and the solvent. Curran, et al. (1967), proposed that the rate of hydrogen transfer is determined by the rate of thermal decomposition to form free radicals.[5] An agitated autoclave was used in these studies at temperatures between 350°C and 400°C. Curran's conclusion was supported by the resuls of work done by Draemel (1975).[6] He found no evidence of hydrogen transfer below the pyrolysis temperature of the subbituminous coal studied (320°C). Wiser also supports the free radical hydrogen donation sequence.[7,8]

Another type of reactive interaction is the reaction between nitrogen bases and acid sites in coal. Results obtained by Dorighi in 1977, indicated that ethylenediamine and piperidine interact with coal in this manner.[9] He found an increase in the nitrogen content in both the extracted material and the coal residue and suggested that the cause was the formation of an amide and a water molecule.

Solvents which appear to dissolve coal effectively by physical means are designated as specific solvents. They are often able to extract a significant amount of material even at room temperature. Most solvents labeled as specific have a free electron pair from an oxygen or nitrogen atom which may be a cause of the solvent activity. The relative solvent strength with respect to coal and the electron pair availability was correlated by Halleux and Tschmaler in 1959.[10] This investigation covered a series of pyridine bases. They concluded that solvent power increases with increasing basicity, unless steric hinderance prevents the organic base from interacting with the acid sites in coal. This type of interaction is not considered reactive

since pyridine bases do not have a hydrogen (bonded to nitrogen) available to participate in the reaction to form an amide.

Research into coal/solvent interactions has, for the most part, concerned pure organic compounds in Soxhlet extraction apparatus run at atmospheric pressure. Work with variable pressure Soxhlet was done first by Bone and subsequently by Ashbury, by Draemel, and by Dorighi among others.[11,3,6,9] The fact that the pressure is variable allows a range of temperatures to be studied, instead of only the atmospheric boiling point of the solvent. Studies of mixed solvents have usually been done as a supplement to pure solvent studies. For that reason, these studies have not been comprehensive. Many of the organic compound mixtures were contacted with coal in Soxhlet-type devices in which the composition of the solvent contacting the coal cannot be determined. Investigations of solvent mixtures have examined low boiling mixtures, high boiling mixtures, and mixtures in which additions are made to degrading solvents.

Several researchers have examined mixtures of low boiling hydrocarbons. In 1921, Bone and co-workers reported qualitatively that with a pyridine/ammyl alcohol mixture a good extraction yield was obtained at 110°C.[11] Bakes (1933) noted similar enhancement with aromatic (benzene or toluene)/alcohol (ethanol, methanol) mixtures at low temperatures.[12] Vahrman made the following observation concerning this behavior:

> "When small amounts of polar solvent (e.g., alcohols) are added to less polar ones such as paraffins and aromatic hydrocarbons, the extraction rate is increased. This

indicates that wetting of the matrix molecules traversed by pores is necessary to facilitate solvent penetration."[13] It is important to note, however, that the aromatic/alcohol mixtures do not extract as much coal as certain nitrogen bases, such as piperidine, at the same temperature.

High boiling mixtures were tested by some early investigators. In 1937, Kuznetsoff extracted coal with equimolar mixtures of tetralin or quinoline with phenol or naphthalene and mixtures of phenol and naphthalene.[14] Since an atmospheric Soxhlet system was used, the temperature of extraction was the atmospheric boiling point of the particular mixture, which for the above compounds was around 200°C. The extraction yields reported were about equal to that of the most active solvent. Dyatova and Dartoya repeated the work in 1945 with similar results.[15] More recently, Oele and co-workers (1951) used mixtures of tetraliny and m-cresol in a 3:2 ratio to extract a Limbra bituminous coal at 405°C. The yields obtained with this mixtures were high; however, the authors did not report pure solvent yields to allow comparison. More complete studies of this type of mixture are needed.

The method of "spiking" degrading solvents with small amounts of reactive solvents has been the focus of recent mixed solvent studies. In 1971, Wise reported a series of extractions of a German coal using tar-oil and 25 different additives in a 5% solution.[10] The extractions were carried out in an autoclave at the atmospheric boiling point of the tar-oil mixture, between 360°C and 450°C, under a nitrogen atmosphere. The results indicated that with the most active additive--tetrahydroquinoline--a 74% yield was obtained, while the

oil alone extracted 53% of the coal. Wise concluded that compounds containing ring nitrogens are particularly effective additives, with the hydroaromatic member of a heterocyclic pair being more effective than the aromatic member. Thus, tetrahydroquinoline is more active than quinoline. Pyridine appears to deactivate the tar-oil, extracting just 51% of the coal on a dry, ash free basis. It must be recognized that extensive pyrolysis must occur at this temperature.

Similar studies were recently completed at SRI International.[17] Hendry and Hun of SRI used 10% solutions of 12 different cosolvents in phenanthrene. The Illinois No. 6 coal and solvents were heated to 350°C for 2 hr in a sealed quartz tube. They calculated yields based on total pyridine solubility of the reacted coal. The most active solution tested was the mixture of tetralin and phenanthrene, which solubilized 59% (daf) of the original coal, contrasted with the 33% yield obtained with phenanthrene alone. As in the work done by Wise, hydroaromatics were found to be more active than the aromatic analog.

The only mixture found to be effective at lower temperatures, was reported by Rybicka in 1959.[18] He found that mixtures of higher ketones and formamides were considerably better for dissolution of Northumberland coal (82%C) than either of the pure components. The most effective mixture was found to be an azeotrophic mixture of methylcyclohexanone and dimethylformamide. The yield obtained in an atmospheric Soxhlet apparatus, at 170°C, was 43% (daf). The pure solvent yield was stated to be less than 43% but not reported.

Methylcyclohexanone alone extracts 8.5% under similar conditions. No conclusion was reached explaining the effectiveness of this mixture.

It is apparent that in contrast to pure solvent studies, mixed solvent work has been neither extensive nor systematic. The studies that have been done have frequently been conducted at temperatures beyond the coal pyrolysis temperature. At these temperatures it is difficult to say what the solvent is interacting with. The low temperature work has usually not examined the effect of concentration in binary mixtures. More work is needed to extend that positive results that have been obtained. Or, as stated by Rybicka:

> "It is felt that further study of binary mixtures using other powerful coal solvents could lead to useful extention of both the theory and practice of solvent extraction work."[18]

Scope

The subject of this investigation is the interaction of certain binary organic solvent mixtures--nitrogen bases in aromatic hydrocarbons--with coal at temperatures below that at which the coal undergoes significant pyrolysis. The coal for this study is a western, low sulfur subbituminous coal. The binary mixtures are examined over the total concentration range at a fixed temperature of 250°C, the extractions being carried to near completion.

This investigation tests the effect of mixture composition on the extraction yield of coal. It also examines the nature of the extraction products by characterizing both the extracted material and the remaining coal residue.

Nature of Results

The solvent mixtures studied were contracted with coal in a batch, stirred reactor. Mixtures involving tetralin, toluene, pyridine, ethylenediamine, quinoline, piperidine, and tetrahydroquinoline, and were studied. Two distinct behaviors of extraction yield as a function of solvent composition were identified. In the majority of the solvent mixtures the yield increased linearly with increasing concentration of the more active solvent. When a mixture of toluene and ethylenediamine was used, the yield increased rapidly when small concentrations of ethylenediamine were used but then leveled out close to its maximum value in a 50-50 mix. Solvent incorporation was found not to be a strong function of mixture composition in any of the mixtures tested.

II. EXPERIMENTAL STUDIES

To investigate the effect of solvent mixture compositions on the interaction of organic solvents with coal, it is necessary to conduct coal/solvent contacting: (1) at controlled solvent composition, (2) under controlled temperature conditions, and (3) under conditions which allow the use of solvent in such a way as to minimize the effects of dissolved coal material of the further interactions of the solvent with the remaining coal. A controlled solvent composition must be maintained in order to quantatively study the effect of composition on coal extraction. Constant temperature conditions during an experiment and reproducible temperature conditions from experiment to experiment are necessary to insure similar extraction conditions for each solvent mixture. Since the interactions of coal and solvents are being studied, it is necessary to minimize the concentration of coal extract in the solvent.

A variable pressure Soxhlet-type contactor, a mechanically agitated sealed tube, or a stirred, batch reactor can be considered in terms of the requirements of this investigation. A variable pressure Soxhlet-type contactor has often been used to study the interactions of a single solvent with coal under controlled temperature conditions. It provides solvent/coal contacting without further interaction of the previously dissolved material and the coal; however, if solvent mixtures are used the composition of the solvent contacting the coal cannot be controlled since the solvent is refluxed. As a result of the refluxing of the solvent, the overall solvent composition would not be the same as the composition of the solvent contacting the coal.

A mechanically agitated sealed tube would allow coal/solvent contacting to occur under conditions of controlled temperature and solvent composition. A major drawback of this system is the fact that solvent cannot be used effectively. If an active solvent mixture is used, a very high solvent/coal ratio is required to minimize the final extract concentration. A stirred, batch reactor has that same limitation.

However, a stirred, batch reactor can meet the requirements, if certain modifications are made. These modifications involve the use of successive solvent batches for one batch of coal to control the concentration of extracted material in the coal. In order to use successive solvent batches, the coal must be contained, so a solvent batch may be removed without removing undissolved coal. Since the coal is contained, care must be taken to insure circulation of solvent through the coal. Therefore, a stirred, batch reactor, if adapted to provide for use of successive solvent batches, coal containment, and solvent circulation, is an acceptable coal/solvent contacting system for mixed solvent studies.

Equipment

The modified, stirred, batch reactor used in this study is illustrated in Fig. 1. The 304 stainless steel vessel has a diameter of 6 cm and a total volume of 400 ml. It can operate at temperatures up to 350°C, at a pressure of 3.5 MPa (500 psig). The vessel is fitted with a rupture disc designed to fail at this upper operating limit. The vessel is heated by a tube heater which is connected to a temperature controller to provide constant temperature conditions during an experiment.

The coal is contained in a stainless steel basket which consists of a 2.5 cm length of 2.5 cm diameter tubing with 200 Tyler mesh (0.074 mm) screen silver soddered to one end. A 2.5 cm diameter ring with 200 mesh screen attached, serves as a cover to the basket. The basket is secured inside the vessel in a 3 cm diameter, stainless steel sleeve welded to the top flange. Solvent circulation is provided for by use of a stirring propeller that is set to a height 2 cm above the coal basket. When the propeller is rolated at 200 rpm with a 12 watt motor, the solvent is forced through the coal basket. Vortex formation is advoided by placing baffles above and below the stirring propellor. ~~The postulated flow pattern is sketched in Fig. 1.~~

The solvent batches are supplied to the reactor from vessels that mix and preheat the solvent mixtures. The entire solvent contacting system is shown schematically in Fig. 2. Coal extract solution can be removed from the reactor through the outlet tube, which is equipped with a 75 cm double tube (1 cm/0.3 cm) water cooled heat exchanger. Solvent is transferred under nitrogen pressure into the reactor from a 200 ml stainless steel preheating vessel. This vessel serves to preheat the solvent mixture to the contacting temperature before it enters the reactor. For that reason, this vessel is designed to operate at comparable temperatures and pressures to the reactor (350°C, 3.5 MPa). As with the reactor, a rupture disc is used to protect the preheating vessel. The quantity of solvent needed is measured before being admitted to the preheater. A glass, 2.5 cm diameter, 200 ml vessel is used for solvent measurement. The small diameter allows accurate volume calibration. The measuring vessel

is filled from a 600 ml glass vessel. This vessel has the capacity to hold 3 solvent batches, which is the maximum number employed for one batch of coal. The two glass vessels can each withstand a pressure of 0.45 MPa (50 psig) at 150°C. Since the two glass vessels are always interconnected, one rupture disc that is designed to fail at 0.45 MPg protects both vessels.

Coal and Solvents Studied

The particular coal and solvents employed in this investigation were selected primarily because they had been used in previous studies of the interaction of coal with single organic solvents.[9] Thus, extensive background information on the coal and solvents are available and results could be compared, meaningfully with the previous single solvent studies carried out at the same temperatures. The coal is a low sulfur, subbituminous coal from the Roland Seam of the Wyodak Mine in Gilette, Wyoming. It had been stored in a nitrogen atmosphere, as 9 kg samples in sealed plastic bags from a previous investigations.[6] This coal was alternately ball milled and sieved in order to obtain the desired particle size of minus 28, plus 150 Tyler mesh (0.595 - 0.105 mm). This coal was then transferred to sealed, 1 liter, metal cans, again in a nitrogen atmosphere. As needed, the contents of an individual car were emptied into a 600 ml beaker and stored in an evacuated (2 mmHg) dessicator.

Samples of the coal were submitted for analysis to both the Commercial Testing and Engineering Company in Denver, Colorado and the University of California, Berkeley Microanalysis Laboratory. Commercial Testing used ASTM Test D271-70 for their analyses. The

Microanalysis Lab use a Perkin-Elmer (Model 240) Analyzer for determining carbon, hydrogen, and nitrogen and the Grote Combustion Method for determination of sulfur, chlorine, and ash.[19] The results of these analyses are displayed in Tables I and II.

The analyses for carbon, hydrogen, nitrogen, and ash are of particular importance for this study. The disagreement between the two laboratories for these components is only a few percent and may be attributed to the different analytical techniques used. Since all subsequent analyses of coal residue and extracted material were compiled by the U. C. lab, their values for the coal were averaged and used when calculating mass balances during the study.

Solvents were selected for this study on the basis of activity as pure solvents determined from previous work. Cost, toxicity, and available purity were other factors considered in selecting solvents. The purity of a component in any solvent mixture studied must be relatively high so that results of solvent/coal contacting experiments are not influenced by solvent impurities. To insure high purity reagent grade solvents were used when available. The solvents studied are tetralin, toluene, pyridine, piperidine, ethylenediamine, tetrahydroquinoline, and quinoline. Pyridine and toluene are Mallinckrodt (A.R.) grade, while ethylenediamine is available at 98% purity from Mallinkrodt. Baker supplied quinoline and piperidine at 99% purity. The tetralin used is Aldrich (A.R.) grade. Reagent grade tetrahydroquinoline is obtained from Pfaltz and Bauer. All solvents are used as received.

Procedure

The determination of quantitative yields of soluble material in coal/solvent contacting experiments require that the coal and solvent quantities and condition be carefully established, that the conditions of contacting be controlled, and that recovery and separation of extracts and residues be provided for.

Coal and Solvent Preparation

Approximately 5 gm of coal are removed from the storage dessicator and placed in a 200 Tyler mesh sieve. The coal is thoroughly rinsed with distilled water to remove any adhering fine particles. After the rinse water is drained, and the coal is placed in a vacuum oven and dried for 24 hr at 105°C and 33 KPa while being swept with nitrogen at the rate of 0.8 g-mole/hr. A measured amount of the dry coal is then placed in the coal basket, which is immediately sealed into the reaction vessel. The vessel is then thoroughly flushed with nitrogen.

To prepare the solvent mixtures, each component solvent is measured volumetrically to obtain the desired composition of the binary mixture. Density data and molecular weights used to calculate the required volumes of each solvent, are obtained from reference sources.[20] Five hundred millileters of this solution are then transferred to the glss mixing vessel. At this point, both glass vessels are sealed and flushed with nitrogen, and the solvent mixture vigorously stirred by means of a magnetic stirring bar.

Extraction

Before solvent/coal contacting can begin, a solvent must be measured and preheated to the extraction temperature. A batch is measured by a transfer of 150 ml of the mixture from the mixing vessel to the measuring vessel. To do this, valve 1 is closed and the mixing vessel is pressurized to 0.24 MPa of nitrogen. When the level of solvent in the measuring vessel is at the desired height, valve 1 is opened to equalize the pressure between the vessels and half the transfer. The preheating vessel, which had previously been sealed and flushed with nitrogen, is now evacuated. Valve 2 is opened, which allows the transfer of the contents of the measuring vessel to the preheater. When the transfer is complete, valve 2 is closed. The preheater is equipped with a tube heater which heats the contents to 250°C, the desired contacting temperature. While the solvent batch is being heated, the tube heater of the reaction vessel is switched on. This heater is connected to a controller to insure constant temperature during the contacting. When the solvent reaches the temperature of 250°C, which normally required 20 min, the preheating vessel is pressurized with nitrogen to 2.9 MPa and valve 3 opened. The nitrogen pressure forces the contents of the preheating vessel through valve 3 and into the reactor. After the preheater is empty, valve 3 is closed, the stirrer of the reactor is turned on, and the initial time of solvent/coal contact is recorded.

Initial experiments with this contacting system, using single solvents had determined that at least two solvent batches are necessary to obtain comparable extraction yields to those of the pressurized Soxhlet extractor used in earlier studies.[9] For 4 hr of total contact time, which was selected for this study, a sequence of 1 hr/3 hr for 2 solvent batches or 1 hr/1 hr/2 hr for 3 solvent batches was found to distribute the extracted material roughly equally between the batches. Thus, after 40 min of contacting, a new solvent batch is measured and preheated as described. When 1 hr of total contact time has passed, the first solvent batch is removed. To do this, valves 4 and 5 are opened, so that the pressure in the reactor forces the solvent solution through the outlet tube and heat exchanger into a 250 ml flask. Residual solvent in the outlet tube is removed through valve 6 (which supplies nitrogen) with valves 5, 4, and 6 being closed in sequence. The second batch is subsequently admitted to the reaction vessel and is removed after its alloted time. A third batch, if used, is handled similarly.

Treatment of Extract Solution

Treatment of the extract solution is required in order to determine the quantity of coal derived material in the solvent solution and to isolate this material from the solvent.

The first steps in treating the extract solution are the combining of the solvent batches, filtration of the mixture to remove any fine coal particles, and measurement of the total volume of the mixture. The fine coal particles collected in the filter are recovered and weighed. At this point, 10 ml aliquots of the extract solution are drawn by pipette and placed in a previously weighed petri dishes.

The dishes are placed in a vacuum oven at 130°C and 33 kPa, swept by nitrogen, until dry to constant weight, at least 24 hrs. The dishes are then reweighed, and the total extract weight calculated on the basis of the weight of extract in the 10 ml aliquot of the extract solution. The solution is then distilled to less than 10% of its original volume and stored in a flint glass bottle. When extract material is needed for subsequent analysis, a portion of the concentrated solution is dried in a vacuum oven.

Coal Residue Treatment

The coal residue must be separated from adhering solution so it may be dried and weighed accurately. This separation is accomplished by a thorough rinsing of the residue in a Buchner funnel. the residue is removed from the coal basket and placed on the previously weighed filter paper. A rinse of either acetone or water is used. If the solvent mixture is miscible with water, then water is used as the rinsing agent; if not, then acetone is used. Acetone is miscible with all the mixtures tested. The rinsing is continued until the filtrate is clear. The filtrate is discarded since it is found that it contains a negligible amount of extract. The rinsed filter cake is then placed in a 130°C vacuum over for 24 hrs and weighed. The residue is stored in a flint glass bottle, inside an evacuated dessicator. Samples for analysis are taken as needed from storage.

Yield Determination

From the treatment of the coal extract and residue, two different bases exist for calculation of the yield of soluble material. One way a yield may be calculated is on the basis of the weight of extract

obtained, divided by the weight of coal originally in the basket. This yield is designated as the extract yield. To calculate the residue yield, the difference in weight of the original coal and the coal residue is divided by the weight of the original coal. Differences in the two numbers arise from solvent retention in the extract and residue, losses of extracted material, and gas evolution during extraction. A more complete discussion of yield calculation is presented in the next chapter.

Characterization of Extract and Residue

To obtain a more complete picture of coal/solvent interactions, the extracted material and the coal residue must be characterized with respect to their composition and molecular size. Here this is accomplished by using elemental analysis, vapor presure osmometry and gel permeation chromatography. From an elemental analysis for C, H, and N, the molecular H/C ratio may be calculated. Also the precentage of nitrogen in the extract or residue reveals how much of a nitrogen solvent is retained. Molecular weight determination by vapor pressure osmometry of extracted material gives further insight to the extraction process. Finally, from gel permeation chromatography of the coal extract a relative molecular weight distribution may be examined.

Elemental Analysis

Elemental analyses of coal extract and residue are obtained from the U. C. Berkeley Microanalysis Laboratory, which employ a Perkin-Elmer (Model 240) "CHN Analyzer"; weight percentages of carbon, hydrogen, and nitrogen are reported. All samples are submitted in sealed vials

after being dried for 24 hr in a vacuum oven operating at 130°C, 33 kPa pressure and swept by nitrogen.

Vapor Pressure Osmometry

Number average molecular weights of pyridine soluble coal extracts are determined with a Hewlett-Packard (Model 320B) Vapor Pressure Osmometer, in pyridine solvent. The instrument uses the colligative property of saturation temperature of solutions to allow calculation of number average molecular weights. The solvent chosen for the determination was pyridine. The solutions are prepared by dissolution of the extract material in pyridine, filtration of the solution, and then evaporation of the pyridine in a vacuum oven. Subsequently, four different known concentrations are prepared, ranging from 0.5% (by wt) to 3% and voltage measurements made. After calculation of a calibration constant using a known molecular weight material--reserpine (Aldrich 99%, M.W. = 608.71) number average molecular weights are calculated by division of the calibration constant by the number $(V/C)_{C=0}$, determined from the data.

Gel Permeation Chromatography

Gel permeation chromatography enhances information obtained by vapor pressure osmometry. It provides a qualitative molecular weight distribution of the extract. Samples are prepared identically to samples from the VPO runs; althrough, concentrations of less than 0.1% (by wt) are required.

III. RESULTS AND DISCUSSION

A number of binary organic solvent mixtures were contacted with the Wyodak coal at 250°C. The effect of solvent mixture composition was studied and the nature of the extraction products characterized.

Experiments Performed

Before coal/solvent contacting experiments were undertaken with solvent mixtures, several experiments were performed with pure solvents. One objective of these single solvent experiments was to calibrate the mixed solvent equipment by the comparison of the yields obtained in it with yields obtained under similar conditions with a pressurized Soxhlet extractor.[6,9] Another objective was to determine the optimum solvant batch sequence. In addition, a "neutral" solvent had to be chosen which could act as a background and a dulluent for "active" solvents, to allow comparison of the effectiveness of these active solvents.

The calibration experiments were made with tetralin and pyridine; two solvents for which data had been collected with variable pressure Soxhlet equipment at 250°C, for the same Wyodak coal.[6,9] Draemel found that tetralin extracted 8.7% (dry, ash free basis) of the coal at 250°C during 4 hr of contacting in a variable pressure Soxhlet extractor.[6] In the mixed solvent equipment, it was found that tetralin extracted 8.7% (daf) when two batches were used (1 hr/3 hr); but only 8.2% (daf) with one solvent batch when contacted with the same coal at 250°C for 4 hr. Using pyridine, Dorigh reported a Soxhlet extraction yield of 15.9% (daf), again at 250°C and 4 hr extraction time.[9] A

15.0% (daf) yield was found in the analogous experiment in the mixed solvent equipment when two solvent batches (1 hr, 3 hr) were employed.

During these experiments the batch sequence that most equally split the extracted material between the batches was determined. When an initial pyridine batch was contacted with coal for 3 hr an extract yield of 13.5% (daf) was found, while a initial 2 hr batch of pyridine extracted 12.9% (daf), and an initial 1 hr batch solubilized 11.7% (daf). The 4 hr extraction yields found in each of the above experiments--batch sequences of 3 hr/1 hr, 2 hr/1 hr/1 hr, and 1 hr/3 hr--were within 1% of each other. Thus, as stated in the previous chapter, the batch sequences decided upon were 1 hr/3 hr for two batches and 1 hr/1 hr/2 hr for three solvent batches, considering 1 hr as a maximum contact time for a solvent batch. One hour is the minimum practical contact time since at lease 20 min are required for preheating a solvent batch and the preheater takes 30 min to cool to room temperature.

Selection of a neutral solvent involves consideration of several prerequisites: (1) The solvent cannot have a large extraction yield at the temperature of interest so that its yield will not overshadow the effect of any active solvent used in combination with the neutral solvent. (2) It must be miscible with any active solvent used and inert toward them at 250°C. (3) It cannot be significantly retained in the extract or coal residue, so that any retention found in a mixture can be attributed to the active solvent. (4) The neutral solvent chosen has to be relatively inexpensive and convenient to use in experiments.

Several solvents that met some or all of the prerequisites listed were considered. Cyclohexane meets all of the requirements, but its vapor pressure at 250°C is near the pressure limit of the system. Tetralin, although it is a hydrogen donor solvent at high temperatures, satisfies the requirements at 250°C.[6] Its only drawback is its tendency to be retained to some degree in the coal extract and residue. Decalin and toluene were tested and found to be acceptable as neutral solvents. Toluene was selected over decalin because of its greater availability. To test the effect of using different neutral solvent, tetralin was used in two experimental sequences.

The solvent mixtures tested were: toluene/pyridine, toluene/quinolin, toluene/piperidine, toluene/ethylenediamine, toluene/tetrahydroquinoline, tetralin/pyridine and tetralin/tetrahydroquinoline. All were contacted with coal at 250°C for 4 hr using at least two solvent batches per run.

Principal Results

The most direct result obtained from coal/solvent contacting is the yield of extracted material. Determination of the relationship between the yield and the composition of solvent contacting the coal was a principal aim of this investigation.

The yield can be calculated on two different bases, as described in the previous chapter. The extract yield is calculated by:

$$\frac{(\text{wt of extract})}{(\text{wt of coal})} \times 100\%$$

The residue yield is:

$$\frac{(\text{wt of coal}) - (\text{wt of residue})}{(\text{wt of coal})} \times 100\%$$

Solvent Retention

Before yields are calculated, solvent retention must be taken into account. It was found that the solvents pyridine, piperidine, ethylenediamine, quinoline, and tetrahydroquinoline all were retained in both the extract and in the residue. Correction of yields for solvent retention involves the use of a simple nitrogen balance on the coal, residue, and extract although, depending on the initial assumptions made, different methods of correction may be developed. Two different correction methods were used in this study. One was based on the two assumptions that, in the abscence of nitrogen solvents, the percentage of nitrogen in the coal, residue, and extract would be equal, and that the solvent molecule incorporates as a whole. The other correction method used was based on the assumptionthat any material recovered as extract and residue in excess of the original amount of coal is due to solvent retention, but does not assume that the solvent incorporates as a whole molecule. For convenience, the two correction methods will be referred to as method 1 and method 2 respectively.

Correction method 1 was used by Dorighi for yield calculations.[9] With this method, the excess nitrogen in the extract or residue is assumed to be caused by a retained solvent molecule. Corrected values of yield, as well as corrected elemental analyses of the extract and residue are calculated. The correction procedures are described in Appendix A.

To use correction method 2, one assumes that the weight of retained solvent equals the excess weight of the extract and residue over the original amount of coal. From the nitrogen contents of extract and residue obtained in the elemental analysis, an effective molecular weight of retained solvent is calculated. As a result of this calculation, an effective nitrogen content for the solvent is also determined. This effective nitrogen content of the solvent can then be substituted into the correction equations of method 1 to calculate corrected yields. The details of correction method 2 are presented in Appendix A.

The data obtained for all runs are presented in Table III. Included in the table are extract and residue yields (corrected by methods 1 and 2), corrected H/C ratio, solvent retention ratio (corrected by method 1), overall closure of mass balance (using correction method 1), and number average molecular weight of extracted material. Correction methods 1 and 2 may be compared from these data. With several solvents, tetrahydroquinoline in particular, there is a large difference between the extract and residue yields. This difference is reflected in the overall mass balance and is a direct result of using correction method 1. With low yields (<20%), the residue yield is very sensitive to solvent correction. If the solvent is not being retained as a whole molecule as assumed, an over correction results. A slight over correction tends to significantly inflate the calculated residue yield. Correction method 2, on the other hand, forces the total mass balance to close; therefore, over correction is not a problem. The yield calculated as a result of applying this method, will always lie in between the residue and extract yields calculated by use of

method 1. This intermediate valve is expected to be closer in value to the "true" yield, than either yield calculated by method 1. Correction method 1 handles most cases adequately (based on the overall mass balance), but when a large difference in extract and residue yield is calculated, correction method 2 provides more satisfactory yield values.

Effect of Solvent Composition on Yield

Once corrected yields are calculated, an evaluation can be made of the yield vs solvent mixture composition behavior. Plotted on the following graphs are corrected dry, ash free extract yield vs solvent composition. The yields presented are those corrected by method 2 except for the yields of the piperidine/toluene mixture where correction method 1 provided an overall mass balance of at least 96%.

Pyridine, a base of intermediate strength (pK_B = 8.75), has been studied extensively as a coal solvent.[9] The yields obtained from the pyridine/toluene and pyridine/tetralin mixtures are presented in Figs. 3a and 3b respectively. As can be seen from these figures, both mixtures exhibit a linear increase of yield with an increasing percentage of pyridine. Solvent correction was necessary only for the case of 90% and 100% pyridine, and even in these cases, the solvent retention is small.

Quinoline is a two ring aromatic molecule with a base strength similar to pyridine. Quinoline has generally been reported to be a more active solvent than pyridine.[21,22] Figure 4a shows the results of extraction of coal with quinoline/toluene mixtures of different concentractions. As with pyridine, a linear increase in yield with

increasing quinoline concentration is found; although the yields with quinoline were higher. Solvent correction was necessary at all concentrations. Correction method 2 was used because use of method 1 gave a large difference between extract and residue yields. The effective molecular weight of quinoline calculated by method 2 were between 80 g/g-mole and 95 g/g-mole whereas quinoline actually has a molecular weight of 129 g/g-mole. It is clear that quinoline is not being retained as a whole molecule; although, it is difficult to conclude from the calculated molecular weight in exactly what some of the molecule is being retained. The amount of solvent retention does not appear to be a function of quinoline concentration.

Piperidine, the hydroaromatic analog of pyridine, is a strong organic base ($pK_B = 2.88$). Hence solvent activity may be expected both because of its free electron pair on the nitrogen heteroatom and its interaction with acid sites of coal. The graph of yield vs concentration for the toluene/piperidine mixture is shown in Fig. 4b. Again the large increase in yield with increasing concentration is observed. Solvent retention corrections were required for all concentrations of piperidine. Extract and residue yields calculated by correction method 1 are within 3% of each other, suggesting that piperidine is retained as a whole molecule.

Tetrahydroquinoline combines many features that should make it an excellent coal solvent. First of all, it is a proven hydrogen donor at high temperatures. Wise found it to be an excellent activator of tar-oil for coal extraction at 400°C.[16] Secondly, it possesses a nitrogen heteroatom. Finally, it has a base strength comparable

to piperidine. In 1969, Hausigk in found that tetrahydroquinoline would dissolve 90% (daf) of a bituminous coal at 300°C.[23] He attributed this high yield to hydrogen donation. At lower temperatures hydrogen donation would not be expected.[5]

Figures 5a and 5b display the results of extractions with tetrahydroquinoline in mixtures with toluene and tetralin respectively. In any proposed coal liquefaction process, tetrahydroquinoline could only be expected to be present in small concentrations because its low concentrations in coal derived liquids and its high cost as a pure additive. For this reason, high concentrations of tetrahydroquinoline were not studied in this investigation. As before, a linear relationship between yield and composition is observed. Correction for solvent retention using method 1 gave excessive differences between extract and residue yields. This may mean that only part of the molecule is incorporated. The effective molecular weights calculated by use of correction method 2 corroborates this theory. They range from 20 g/g-mole to 110 g/g-mole, generally increasing with increasing tetrahydroquinoline concentration. Tetrahydroquinoline has a molecular weight of 133 g/g-mole. The amount of solvent retention was particularly large at the 50% composition in toluene. This high retention may be caused by thermal decomposition although Hausigk reported that tetrahydroquinoline is thermally stable at 300°C.[23]

The only mixture that displayed a nonlinear relation between yield and mixture composition was ethylenediamine/toluene (Fig. 6). Ethylenediamine is a strong base ($pK_B = 3.04$), and that fact, along with its aliphatic character, make it a likely candidate to interact

with acid sites in coal. This reactive type of interaction is reflected in the yield vs concentration behavior. It appears that as soon as the ethylenediamine concentration reaches a certain minimum level, at which all available acid sites in the coal may be attacked during the extraction time, the yield is close to the pure solvent value. Correspondingly, the solvent retention of ethylenediamine is high, even at low concentrations. Solvent correction 2 was employed to calculate yields because overall mass balances calculated with correction method 1 did not close. The molecular weights calculated by use of method 2 ranged from 40 g/g-mole to 50 g/g-mole, less than the actual value of 60 g/g-mole. In this case, the mass balance closure problem with solvent correction method 1 may be due to amide formation, along with the loss of a water molecule.

The minimum amount of ethylenediamine required to attack the acid sites in coal can be calculated on the basis of the data from this study. Judging from the results for 10% and 50% ethylenediamine, one may estimate that the yield levels out at 30% ethylenediamine in toluene. It has been observed that at least 80% of the total extraction occurs in the first solvent batch of 150 g. The amount of ethylnedramine in a 30 mol% ethylenediamine batch is 0.55 g-moles. So the minimum ratio of ethylenediamine to coal needed is approximately 0.15 g-moles/g, or 0.38 g-mole ethylenediamine per g-atom carbon in the extract.

The linear behavior of yield vs concentration of all the mixtures studied, with the exception of ethylenediamine/toluene, indicates that different mechanisms of solubility may exist for these mixtures and the ethylenediamine/toluene mixture. Since many bulk solution

properties change approximately linearly over a range of concentration, one may conclude that the extraction yield is a function of the bulk solution properties for the mixtures toluene/pyridine, tetralin/pyridine, toluene/quinoline, toluene/piperidine, toluene/tetrahydroquinoline, and tetralin/tetrahydroquinoline. The ethylenediamine/toluene behavior on the other hand, seems to be a site-specific effect, depending only on presence of sufficient ethylenediamine.

Another question to be answered is whether solvent retention is due to bulk solution effects or if it is site-specific. This may be addressed by examination of the amount of retention at each concentration. Displayed in Table IV are the ratios of moles of solvent retained in the extract to gramatoms of carbon or oxygen in the extract and the moles of solvent retained in the residue per gram-atom of carbon in the coal residue. The extract ratio is calculated by:

$$\frac{S_E/M.W.s}{\%C/100\%}$$

where S_E is the extract solvent retention ratio (weight basis), M.S.s is the molecular weight of the solvent retained, and %C is the mole percent carbon inthe extract. The residue ratio is determined similarly. In all cases, the values of S_E and %C were determined by the use of correction method 1.

As can be seen from Table IV the solvent retention in both the extract and residue increases rapidly with small concentrations of the active solvent for all solvent mixtures where solvent retention is found. Furthermore, with the exception of retention of ethylenediamine in the residue, the molar solvent retention ratios stay relatively

constant at concentrations of the active solvent over 10%. This behavior suggests that solvent retention of piperidine quinoline, tetrahydroquinoline, and ethylenediamine is a site-specific effect. As stated before solvent retention is small when pyridine is used as the active solvent.

The magnitude of the molar solvent retention ratio varies somewhat from mixture to mixture. Ethylenedomaine and piperidine seem to behave similarly, with one solvent molecule being retained per 70 carbon atom (or one per 8 oxygen atoms) in the extract. The retention in the residue is somewhat less; one solvent molecule is retained for 140 carbon atoms. With ethylenediamine, a sharp increase of residue retention is found at high concentrations. One may expect that quinoline, which is larger than both piperidine and ethylenediamine, would be retained less on a molar basis because of steric considerations. That is the cause with one quinoline molecule being retained per: 200 carbon atoms in the extract (60 oxygen atoms in the extract) and 500 carbon atoms in the residue. The retention of tetrahydroquinoline is slightly higher than quinole.

Characterization of Extraction Products

To further understand the coal/solvent interaction mechanism, the extraction products must be analyzed. One important characterization is the molecular hydrogen to carbon ratio. That information along with molecular weights of extracts, allows interpretation of how the nature of the extract changes with changes in solvent and solvent composition. Finally, gel permeation chromatography gives a qualitative molecular weight distribution of the extracted material.

Molecular Hydrogen to Carbon Ratio

The molecular H/C ratios are calculated from the corrected elemental analyses. To obtain corrected carbon and hydrogen percentages, the presence of retained solvent (calculated by method 1) is accounted for by calculation of carbon and hydrogen balances. The specific correction procedure is described in Appendix A.

The extract H/C ratio is plotted vs yield in Fig. 8. This graph includes the data from this study as well as work completed at different temperatures in another study.[9] As can be seen, a definite trend exists. At higher extraction yields the H/C ratio of the extract decreases. This indicates that the most easily extracted material is that which is hydrogen-rich. It also demonstrates that, without hydrogen addition, a coal liquefaction process based on solvent extraction cannot obtain in high yield, a product which has a H/C ratio higher than that of the coal (H/C = 1.01). What is striking about this graph is that it represents extractions carried out with different pure solvents over a wide range of temperatures below the pyrolysis temperature, and with different solvent mixtures over a range of concentrations. Nonetheless, all the points still lie in a fairly narrow band.

Molecular Weight of Extract

Number average molecular weights were determined using vapor pressure osmometry, for the extracts of toluene/pyridine and toluene/piperidine mixtures. These results are plotted in Fig. 9. With thye pyridine mixture, a definite trend exists--the molecular weight of the extract increases with increasing yield because the material most easily solubilized is of low molecular weight.

The piperidine/toluene extracts exhibits the same trend as pyridine; although the curve levels out at the higher yields (90%, 100% piperidine). This may be due to the fact that a portion of the piperidine extract is not soluble in the VPO solvent, pyridine. The insoluble material would tend to be of high molecular weight, so the actual molecular weights of the piperidine extract are more than likely somewhat higher than is shown.

The magnitude of the molecular weights determined are comparable to molecular weights of extracts reported in other studies.[9,24,25] Van Krevelen reported molecular weights of pyridine extracts between 600 and 1100, the valve depending upon the rank of the coal extracted.[24] Dorighi reported a number average molecular weight of piperidine extract of 1200.[9] This is significantly higher than the valve determined here. The discrepancy is probably due to the different temperatures at which the extracts were dissolved in pyridine. Dorighi extracted the piperidine extract in pyridine in an atmospheric Soxhlet extractor, while the piperidine extract in this study was dissolved in pyridine at room temperature. The value reported by Dorighi is thus probably a better representation of the molecular weight of the material extracted by piperidine.

Gel Permeation Chromatography

To gain information concerning the molecular weight distribution of extracted material weight distribution of extracted material, gel permeation chromatography was used. The material obtained from the extraction of coal with toluene/pyridine mixtures of various concentrations were tested. The chromatographs show a flat distribution over a range

of elution volumes. Since there is little detail in the traces, they are not presented. The molecular weight distribution can be calculated from the range of elution volume where extract is detected. The calibrations of elution volume versus molecular weight are available from gel permeation chromotographs of pure compounds. The molecular weight range of every extract tested is from 1800 to 200 with a peak found at a molecular weight of 1100.

IV. CONCLUSIONS

The results of this study indicate the utility of the use of solvent mixtures in the examination of the solvent/coal interaction mechanism. From the interaction of several solvent mixtures with the subbituminous coal of this study, it seems that two different types of mechanism may be involved. When pyridine, quinoline, piperidine, or tetrahydroquinoline are added to toluene, the extent of coal dissolution in the mixture at 250°C appears to be a function of bulk solution properties. The yield vs solvent mixture concentration behavior of the mixture of ethylenediamine in toluene is of a different nature, however, and suggests that the ethylenediamine/coal interaction may involve a site-specific phenomena. The solvent retention of all active solvents both in the extracted material and in the coal residue appears to be a site-specific effect, based on the fact that solvent retention increases rapidly with small concentrations of the active solvent.

The molecular hydrogen to carbon ratios and number average molecular weights of extracted material determined in this study are consistent with values reported previously for single solvent interactions with a subbituminous coal at a range of temperatures below the coal pyrolysis temperature.[9] They are function primarily of the amount of material extracted, not the solvent composition used.

ACKNOWLEDGMENTS

The author gratefully acknowledges the assistance given by Professors E. A. Grens II, T. Vermuellen, and I. I. Cornet in the preparation of this thesis. Assistance in the area of gel permeation chromotagraphy provided by Paul Davis was greatly appreciated. This work was done under the auspices of the U. S. Department of Energy.

APPENDIX A. SOLVENT INCORPORATION IN EXTRACTION PRODUCTS

The incorporation of solvent into extracted material and coal residue as a result of coal/solvent contacting has been observed in several studies.[1,6,9] Different approaches may be used to adjust weights of extract and residue to account for solvent retention. Two different correction methods were used in this study. Correction method 1, developed by Dorighi, is based on the assumptions that (1) without solvent retention, the percentage of nitrogen would be the same in the extract, residue and coal and (2) the solvent is incorporated as a whole molecule. Correction method 2 is based on the assumption that the amount of solvent retention is equal to the excess weight of uncorrected extract and residue over that of the original coal.

Derivation of Correction Method 1

From elemental analyses, the mass fraction of nitrogen in the residue or extract is known--r_N, e_N. The mass fraction of nitrogen in the retained solvent is known--S_N. Assume: If there were no solvent retention, then $r_N = e_n = c_N$, the mass fraction nitrogen in coal (0.0097).

W_R = weight of retained solvent in residue.

W_E = weight of retained solvent in extract.

R = weight of uncorrected residue.

E = weight of uncorrected extract.

R^* = weight of corrected residue.

E^* = weight of corrected extract.

By definition:

$$R = R^* + W_R \qquad (1)$$

From a nitrogen balance:

$$R(r_N) = R^*(C_N) + W_R(S_N) \tag{2}$$

Rearrangement yields:

$$W_R = R\left(1 - \frac{r_N - S_N}{C_N - S_N}\right) \tag{3}$$

and

$$R^* = R - W_R \tag{4}$$

Yields can now be calculated by:

$$\frac{C - R^*}{C} \times 100\% \qquad \text{(residue yield)} \tag{5}$$

$$\frac{E^*}{C} \times 100\% \qquad \text{(extract yield)} \tag{6}$$

where C weight of original coal.

Once the amount of solvent retained has been determined, corrected elemental analyses for carbon and hydrogen may be calculated. The values of uncorrected and corrected elemental analyses are presented in Table A-1. The corrected carbon mass fraction is:

$$r_c^* = \frac{(r_c)\,R - (s_c)\,W_R}{R^*} \tag{7}$$

where r_c^* is the corrected mass fraction of carbon in the residue, r_c is the uncorrected value, and s_c is mass fractionof carbon in the

solvent. A similar equation is used to correct the hydrogen values in both the extract and residue.

Derivation of Correction Method 2

Assume: total retained solvent =

$$W_{ER} = E + R - C \tag{8}$$

By definition:

$$W_{ER} = W_E + W_R \tag{9}$$

Let $X = s_N$ (now a variable)

By substitution of Eq. (3) into Eq. (8):

$$W_{ER} = E\left(1 - \frac{e_N - X}{c_N - X}\right) + R\left(1 - \frac{r_N - X}{c_N - X}\right) \tag{10}$$

Solving for x:

$$x = \frac{E(e_N) + R(r_N) - C(c_N)}{W_{ER}} \tag{11}$$

An effective molecular weight is calculated by:

$$\text{M.W.} \quad (14 \cdot n)/x \tag{12}$$

where n = number of nitrogen atoms in solvent molecule.

Now with the new s_N, corrected values of extract and residue can be calculated by use of Eq. (3) and Eq. (4). The corrected extract and residue yields subsequently calculated by use of Eq. (5) and Eq. (6), will be identical because Eq. (8) forces the total mass balance

to be satisfied. As a result of this restraint, meaningful values of corrected elemental analyses cannot be calculated.

Comparison of Methods

The limiting assumption of correction method 1 is that the solvent molecule is retained as a whole molecule. In solvents, such as ethylenediamine, where this is clearly not the case, severe over corrections arise. The over correction leads to large differences in extract and residue yields. The corrected mass balances show large losses of hydrogen. In these cases, correction method 2 becomes useful. Since, in correction method 2, the total mass balance is forced to be satisfied, overcorrection is not a problem. The yield calculated as a result of applying this method, will always be in between the extract and residue yields calculated by use of method 1. This compromise value is more than likely closer to the "true" yield than either yield calculated by method 1.

REFERENCES

1. A. P. Oele, H. I. Waterman, M. L. Goedkoop, and D. W. Van Krevelen, Fuel 30, 169 (1951).
2. I. G. C. Dryden, Fuel 29, 197, 221 (1950).
3. R. S. Ashbury, Ind. Eng. Chem. 26, 1301 (1934).
4. M. Orchin, C. Golumbic, J. F. Anderson, and H. H. Storch, U. S. Bureau of Mines Bull. No. 55 (1951).
5. G. P. Curran, R. P. Sruck, and E. Gorin, Ind. Eng. Chem. Process Design Dev. 6(2), 166 (1967).
6. D. C. Draemel, Action of Solvents on Subbituminous Coal Below Pyrolysis Temperatures, LBL-4434, Lawrence Berkeley Laboratory, September 1975.
7. W. H. Wiser and G. R. Hill, Proc. Symp. on the Sci. and Tech. of Coal, Ottowa, Mines Branch, Department of Energy, Mines.
8. W. H. Wiser, Fuel 47, 475 (1968).
9. G. P. Dorighi, Interactions of Oranic Solvents with a Subbituminous Coal Below Pyrolysis Temperature, LBL-6355, Lawrence Berkeley Laboratory, June 1977.
10. A. Halleux and H. Tschamler, Fuel 28, 291 (1959).
11. W. A. Bone, A. R. Pearson, E. Sinkinson, and W. F. Stockings, Proc. Royal Society A 100, 582 (1922).
12. W. E. Bakes, D. S. I. R. Fuel Research Tech. Paper, No. 37, 92 (1933).
13. R. S. Vahrman, Fuel 49, 5 (1970).
14. M. I. Kuznetsoff, Fuel 16, 114 (1937).

15. M.K. Dyatova and N. a. Datovya, Bull. Acad. Sci. USSR, 203 (1945).

16. W. S. Wisc, Solvent Treatment of Coal (Mills and Boon, Ltd, London, 1971).

17. D. G. Hendry, and G. P. Hum, SRI International Quarterly Report, October 1976.

18. S. M. Rybicka, Fuel 38, 45 (1959).

19. O. E. Sundberg and G. I. Royer, Anal. Chem. 18, 719 (1946).

20. John Riddick and William B. Bunger, Organic Solvents (John Wiley and Sons, 1970).

21. H. Harriri and G. R. Hill, Kinetic Studies of Thermal Dissolution of High Volatile Bituminous coal, Interim Report, Office of Coal Research, Department of Interior, Washington, D.C., Contract No. 14-01-00001-271, p. 13 (1965).

22. R. Belcher, Fuel 19, 203 (1940).

23. Von D. Hausigk, G. Kolling, and F. Ziegler Brenstoff-Chemie 50, 8 (1969).

24. D. W. Van Krevelen and H. N. M. Dormans, Fuel 39, 273 (1960).

25. W. F. K. Wynn Jones, H. E. Blayden, and F. Shaw Brenstoff-Chemie 33, 302 (1952).

Table I. Analysis of Roland seam coal by the Commercial Testing and Engineering Company.

	As Received	Dry Basis
	Proximate Analysis	
% Moisture	1.00	--
% Ash	14.35	14.49
% Volatile	46.26	46.73
% Fixed Carbon	38.39	38.78
Btu	10790	10817
% Sulfur	1.03	1.04
	Ultimate Analysis	
% Moisture	1.00	
% Carbon	61.41	62.03
% Hydrogen	4.89	4.94
% Nitrogen	1.02	1.03
% Chlorine	0.07	0.07
% Sulfur	1.03	1.04
% Ash	14.35	14.49
% Oxygen (difference)	16.23	16.40
H/C Molcular Ratio	0.96	0.96

Table II. Analysis of Roland Seam Coal by the University of California, Berkeley, Microanalysis Laboratory.

Elemental Analysis* (Dry Basis**)	
% Carbon	59.28 ± 0.9
% Hydrogen	5.01 ± 0.02
% Nitrogen	0.97 ± 0.03
% Chlorine	0.17 ± 0.08
% Sulfur	0.46 ± 0.09
% Ash	15.34 ± 0.7
% Oxygen (difference)	18.77
H/C Molecular Ratio	1.01

* Values reported represent an average value of five samples submitted along with the standard deviation where appropriate.

** Samples were dried for 24 hours at 105°C in an oven evacuated to 250 mm Hg and swept by nitrogen.

Table III. Summary of the data resulting from the extraction of Roland Seam coal at 250°C for 4 hr.

Comp. A	Mole %	Comp. B	Mole %	Yields Ext.[1]	Yields Res.[1]	Yields Ext.[2]	H/C[3] Ext.	H/C[3] Res.	Solvent Retention[4] Ext.	Solvent Retention[4] Res.	OMB[5]	Mn[6]
Toluene	100			7.5	9.4		1.67	0.87			98	535
Toluene	90	Pyridine	10	7.6	9.4		1.55	0.96			98	639
Toluene	50	Pyridine	50	11.0	9.6		1.45	0.92			100	724
Toluene	10	Pyridine	90	15.1	20.0	15.7	13.1	0.86		0.05	96	836
		Pyridine	100	14.7	21.5	15.0	1.30	0.84		0.07	94	902
Tetralin	100			9.0	7.5		1.44	0.94			101	
Tetralin	90	Pyridine	10	9.0	5.1		1.36	0.89			103	
Tetralin	50	Pyridine	50	10.4	10.1		1.31	0.82			100	
Tetralin	10	Pyridine	90	11.6	13.2		1.31	0.79			99	
Toluene	90	Quinoline	10	5.9	13.6	6.3	1.43	0.73		0.07	93	669
Toluene	50	Quinoline	30	12.1	18.5	12.6	1.26	0.76	0.11	0.20	94	807
Toluene	10	Quinoline	90	18.3	13.6	19.4	1.20	0.75	0.14	0.11	95	861
		Quinoline	100	25.0	28.2	25.8	0.99	0.67	0.29	0.09	94	871
Toluene	90	Piperidine	10	11.5	15.2		1.23	0.81	0.44	0.18	97	
Toluene	50	Piperidine	50	17.9	22.7		1.03	0.75	0.59	0.27	96	
Toluene	10	Piperidine	90	28.0	30.0		0.70	0.66	0.99	0.32	98	
		Piperidine	100	35.5	39.1		0.92	0.59	0.50	0.28	97	
Toluene	95	Tetrahydroquinoline	5	9.6	15.3	11.0	1.31	0.88	0.38	0.10	95	
Toluene	90	Tetrahydroquinoline	10	7.6	22.3	10.4	1.17	0.82	0.58	0.19	88	
Toluene	80	Tetrahydroquinoline	20	9.6	21.8	13.8	1.07	0.69	0.65	0.12	90	
Toluene	50	Tetrahydroquinoline	50	19.2	27.5	25.4	0.67	0.87	1.86	0.13	93	
Tetralin	95	Tetrahydroquinoline	5	10.1	15.4	11.5	1.28	0.76	0.17	0.05	96	
Tetralin	90	Tetrahydroquinoline	10	6.8	24.8	10.3	1.26	0.70	0.57	0.18	85	
Tetralin	80	Tetrahydroquinoline	20	12.5	20.1	16.1	1.08	0.87	1.86	0.13	93	
Toluene	90	Ethylenediamine	10	13.1	20.0	14.2	1.17	0.61	0.25	0.20	94	
Toluene	50	Ethylenediamine	50	36.2	42.3	38.9	0.81	0.46	0.41	0.24	95	
Toluene	10	Ethylenediamine	90	36.7	42.9	39.4	0.52	0.53	0.49	0.32	95	
		Ethylenediamine	100	34.6	49.7	43.0	0.45	0.62	0.66	0.26	87	

[1]Corrected when necessary by method 1.
[2]Corrected by method 2.
[3]Corrected molecular hydrogen to carbon ratio.
[4]Weight ratio of retained solvent to solvent-free extract (residue).
[5]Overall mass balance (%)-recovery of cool in extract, residue.
[6]Number average molecular weight of extract.

Table IV. Solvent retention.

Component A	Mole %	Component B	Mole %	Extract S_c[1]	Extract S_o[2]	Residue S_c[1]
Toluene	90	Quinoline	10	0	0	0.0013
Toluene	50	Quinoline	50	0.0020	0.016	0.0036
Toluene	10	Quinoline	90	0.0025	0.016	0.0020
		Quinoline	100	0.0052	0.016	0.0016
Toluene	90	Piperidine	10	0.012	0.13	0.0070
Toluene	50	Piperidine	50	0.015	0.14	0.0071
Toluene	10	Piperidine	100	0.012	0.08	0.0073
Toluene	95	Tetrahydroquinoline	5	0.0070	0.053	0.0020
Toluene	90	Tetrahydroquinoline	10	0.0099	0.093	0.0034
Toluene	80	Tetrahydroquinoline	20	0.011	0.096	0.0021
Toluene	50	Tetrahydroquinoline	50	0.025	0.17	0.0024
Tetralin	95	Tetrahydroquinoline	5	0.003	0.036	0.0009
Tetralin	90	Tetrahydroquinoline	10	0.010	0.077	0.0031
Tetralin	80	Tetrahydroquinoline	20	0.0092	0.090	0.0015
Toluene	90	Ethylenediamine	10	0.0095	0.15	0.0068
Toluene	50	Ethylenediamine	50	0.013	0.11	0.0078
Toluene	10	Ethylenediamine	90	0.014	0.14	0.016
		Ethylenediamine	100	0.017	0.094	0.022

1 $S_c = \frac{\text{g-moles of solvent retained in extract (residue)}}{\text{g-atoms of carbon in extract (residue)}}$

2 $S_o = \frac{\text{g-moles of solvent retained in extract}}{\text{g-atoms of oxygen in extract}}$

Table A-1. Summary of data resulting from extraction of Roland Seam coal at 250°C for 4 hr with solvent mixtures listed.

				Yields (Dry Basis)					Extract Comp.					Residue Comp.				
				Uncorr.		Corrected			Uncorr.			Corrected[1]		Uncorr.			Corrected[1]	
Component A	Mole %	Component A	Mole %	Ext.	Res.	Ext.	Res.[1]	Ext.[2]	%C	%H	%N	%C	%H	%C	%H	%N	%C	%H
Toluene	100	Pyridine		5.89	7.94				79.16	10.84				61.19	4.42			
	90		10	6.5	8.0				78.75	10.31	0.41			57.80	4.61	1.34		
	50		50	9.3	9.6				79.11	9.57	0.51			57.57	4.43	1.45		
	10		90	12.8	12.6		17.0	13.3	76.84	8.42	0.79			59.03	4.28	1.78	58.14	4.17
Tetralin			100	12.5	12.5		18.2		74.12	8.06	0.78			61.16	4.34	1.01	60.13	4.20
	100		0	7.6	6.4													
	90		10	7.6	4.3				81.79	9.03	0.26			63.31	4.49	0.95		
	50		50	8.8	8.6				78.67	8.98	0.52							
	10		90	9.8	11.2				78.18	8.52	0.59			59.91	3.96	1.08		
Toluene	90	Quinoline	10	5.0	4.9		11.52	5.3	79.76	9.59	0.75			61.12	3.75	1.66	59.42	3.62
	50		50	11.5	0	10.3	15.7	10.6	78.24	7.88	1.98	77.62	8.16	65.00	4.14	2.63	61.22	3.88
	10		90	17.7	11.0	15.5	20.0	16.4	76.87	6.87	2.22	75.88	7.08	59.25	3.74	1.97	56.49	3.55
	0		100	27.3	20.4	21.2	27.1	21.9	71.08	5.37	4.29	64.72	5.34	58.10	3.30	1.80	55.76	3.11
	90	Piperidine	10	14.1	-3	9.8	12.9		77.57	9.72	5.72	80.65	8.30	62.00	5.44	3.36	60.43	4.07
	50		50	11.5	0	10.3	15.7		78.24	7.88	1.98	77.62	8.16	65.00	4.14	2.63	61.22	3.88
	10		90	47.3	1.7	23.8	25.4		76.97	8.88	8.79	83.28	4.86	61.22	5.56	4.70	58.25	3.22
	0		100	36.7	14.3	30.07	33.17		75.87	8.33	6.13	78.5	6.03	61.57	5.10	4.38	59.03	2.89
	95	Tetrahydroquinoline	5	11.2	3.85	8.1	13.0	9.3	78.25	8.39	3.59	77.14	8.44	61.16	4.69	1.88	59.05	4.30
	90		10	10.2	3.0	6.4	18.9	8.8	80.30	7.95	4.49	79.78	7.76	64.55	4.84	2.52	61.33	4.18
	80		20	13.5	8.5	8.2	18.2	11.7	80.40	7.58	4.74	79.91	7.13	60.65	3.85	1.98	58.22	3.33
	50		50	46.5	13.0	16.2	23.3	21.5	80.32	6.89	7.19	78.68	4.40	59.19	4.60	2.11	56.21	4.10
Tetralin	95		5	10.1	9.0	8.6	13.0	9.8	81.9	8.62	2.36	81.07	8.68	62.50	4.10	1.39	61.64	3.91
	90		10	9.1	6.8	5.8	21.0	8.7	78.47	8.15	4.46	76.90	8.08	62.67	4.21	2.43	59.33	3.48
	80		20	16.5	10.3	10.6	17.0	13.6	80.91	7.60	4.39	80.75	7.23	56.04	3.68	1.09	53.99	3.31
Toluene	90	Ethylenediamine	10	14.0	0.7	11.1	17.3	12.0	74.95	9.22	10.95	83.78	8.18	62.00	5.06	8.62	66.42	3.40
	50		50	43.3	20.5	30.6	35.8	33.0	68.48	7.76	14.36	80.28	5.45	54.52	4.38	9.79	58.22	2.24
	10		90	46.5	16.0	31.1	36.4	33.4	69.24	6.87	16.10	83.71	3.67	58.61	5.34	12.05	64.57	2.78
	0		100	48.6	26.9	39.3	42.1	36.4	62.30	7.06	19.19	77.08	2.90	57.76	5.33	10.49	62.43	3.22

1 = Corrected by method 1.
2 = Corrected by method 2.

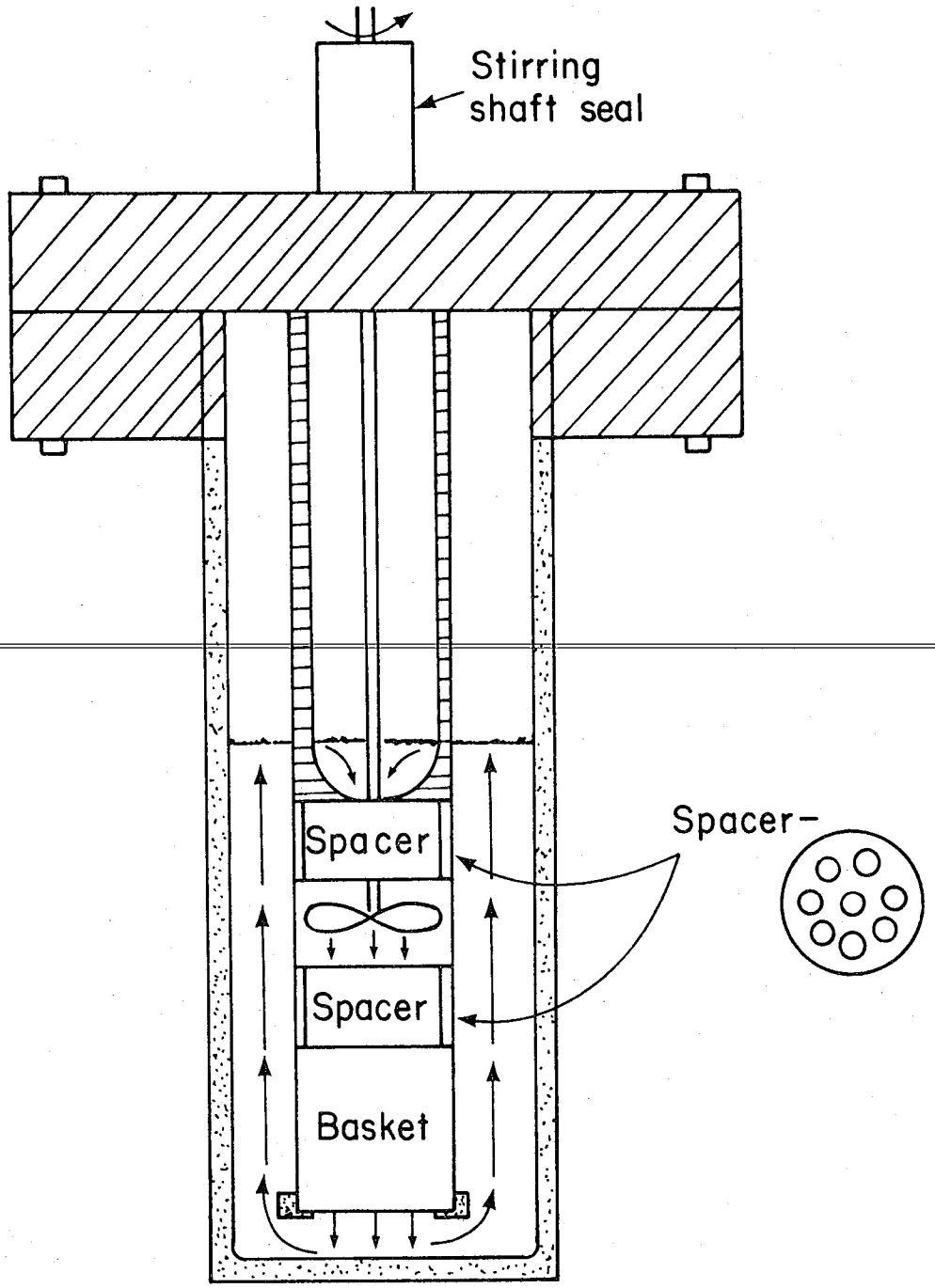

XBL 786-1128

Figure 1 - Cutaway view of reactor.

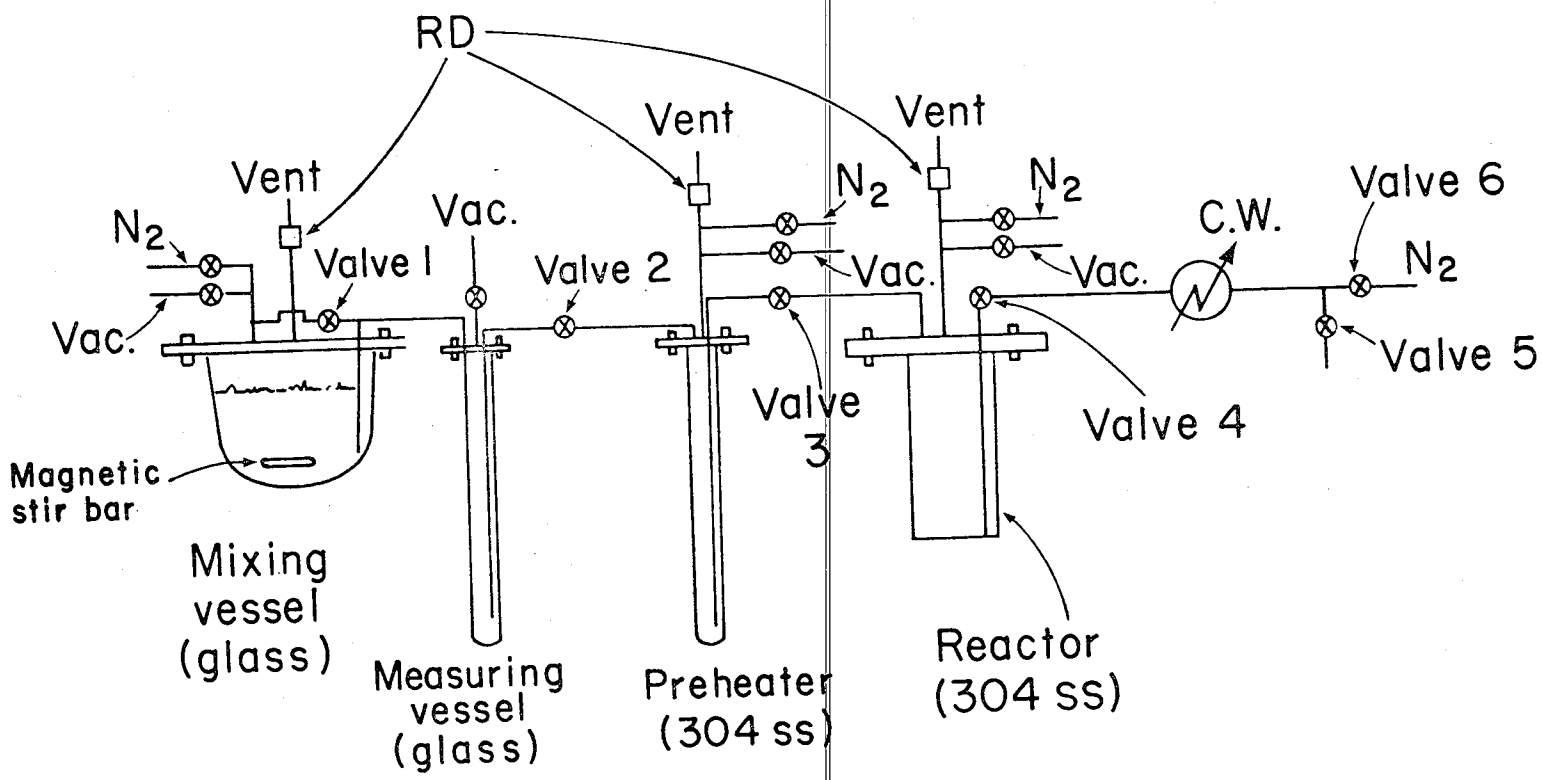

XBL 786-1127

Figure 2 - Schematic of solvent/coal contacting system.

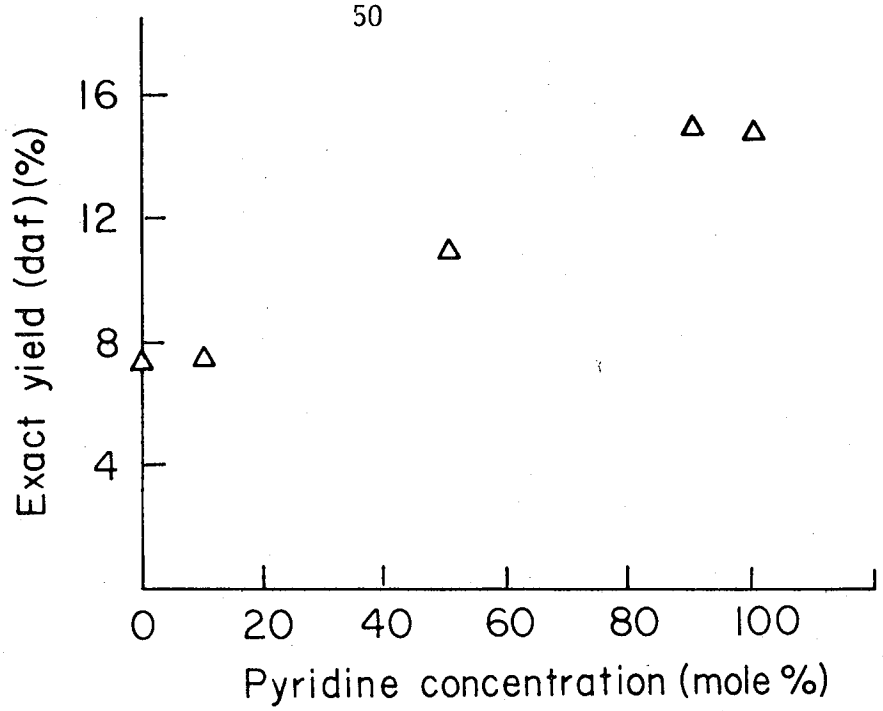

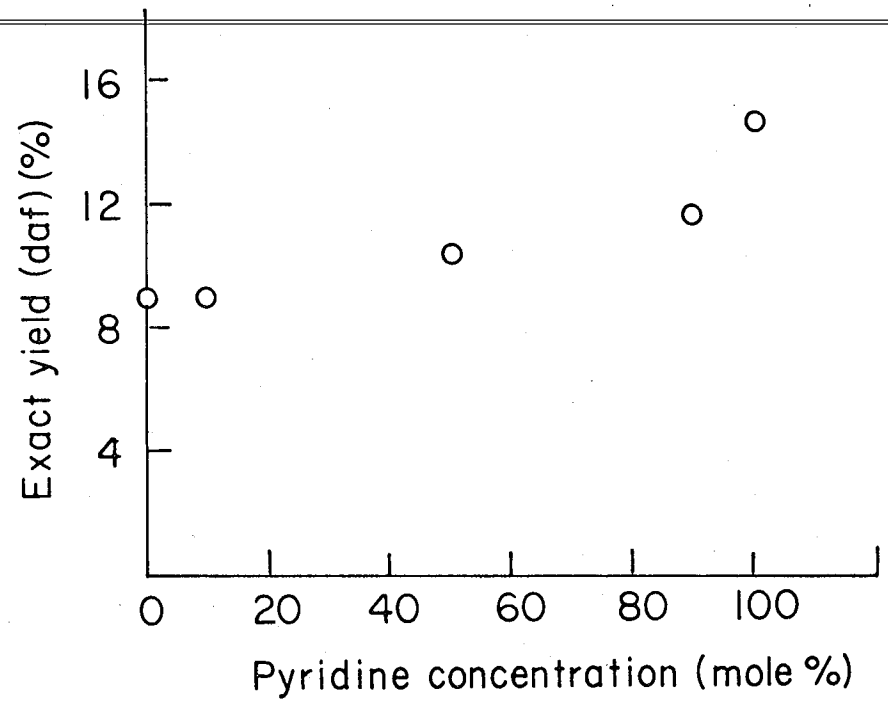

XBL 786-1125

Figure 3 - Percent yield of extracted material as a function of mixture composition for: (a) pyridine/toluene. (b) pyridine/tetralin.

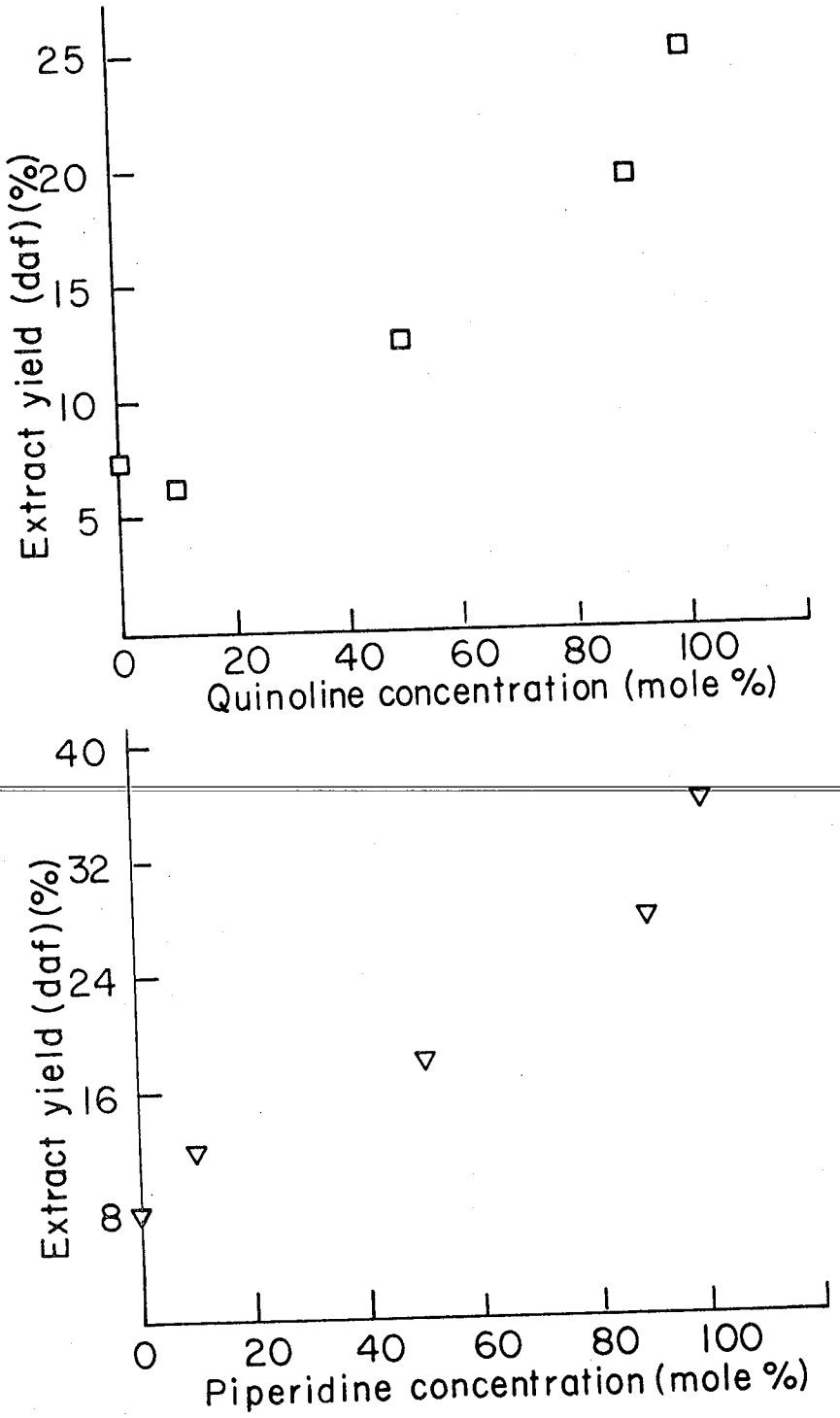

XBL 786-1126

Figure 4 - Percent yield of extracted material as a function of mixture composition for: (a) quinoline/toluene. (b) piperidine/toluene.

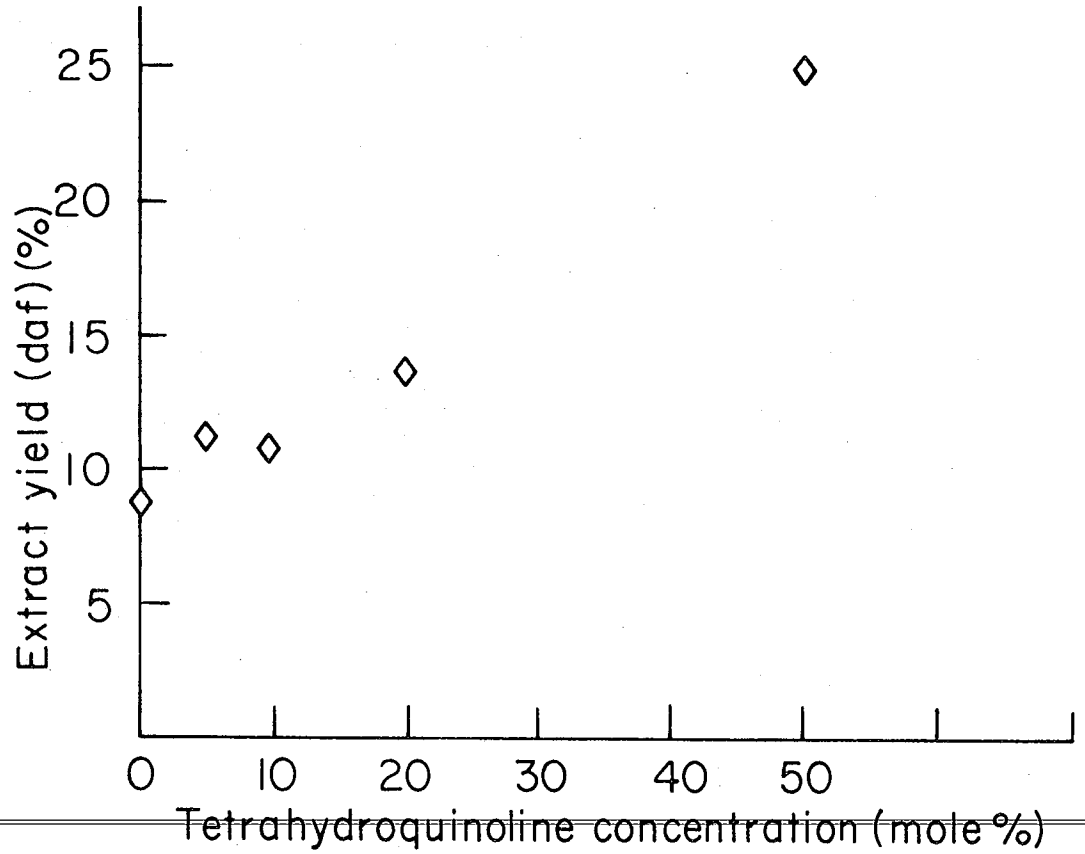

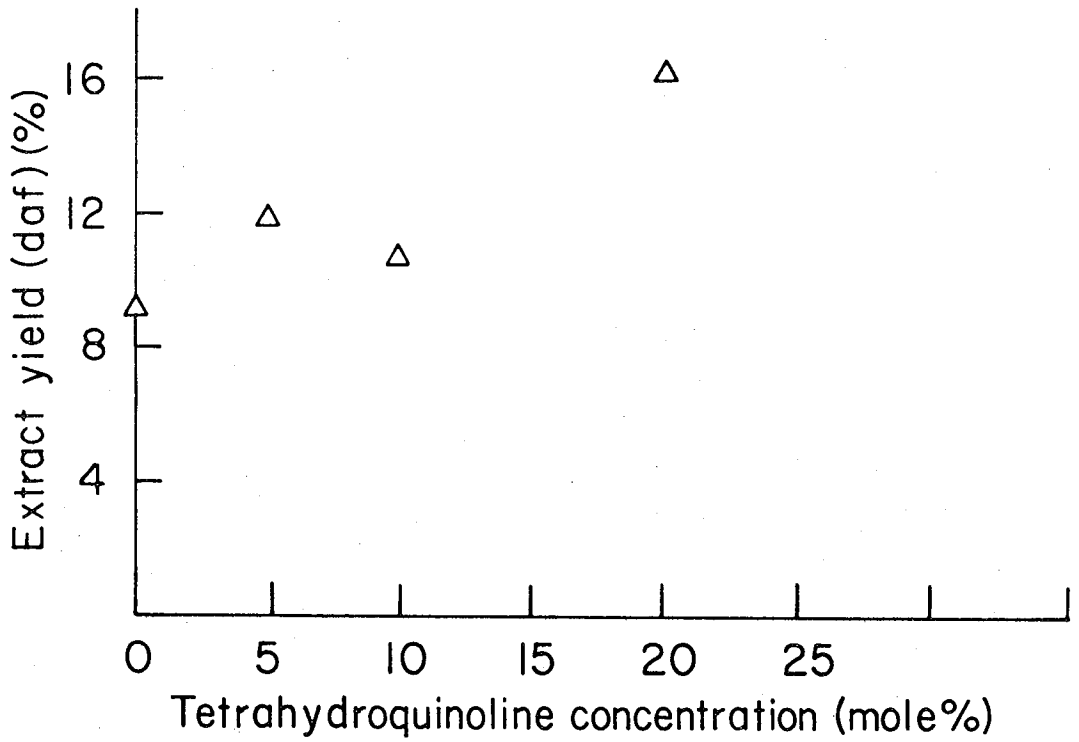

XBL 786-1124

Figure 5 - Percent yield of extracted material as a function of mixture composition for: (a) tetrahydroquinoline/toluene. (b) tetrahydroquinoline/tetralin.

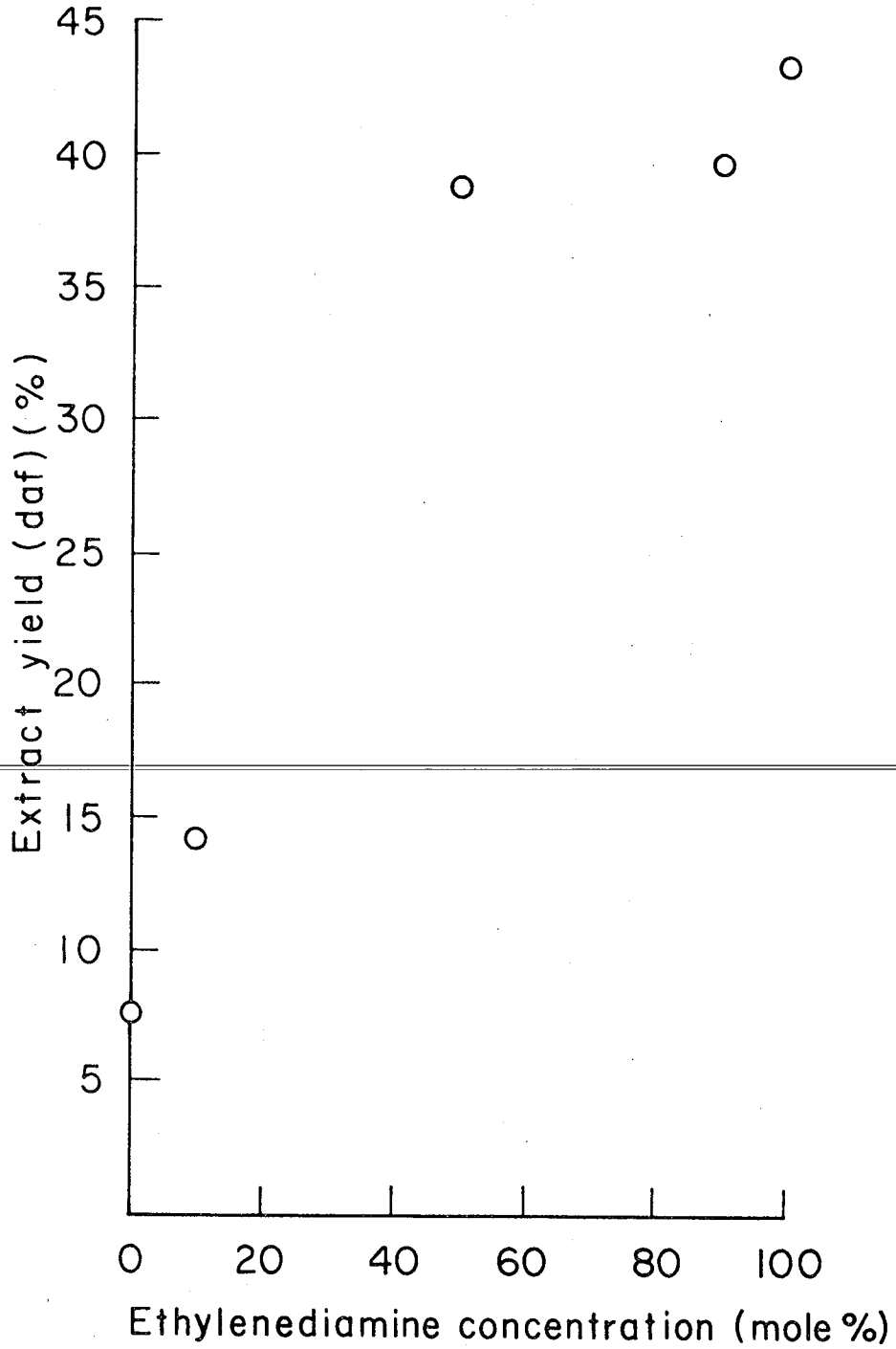

XBL 786-1123

Figure 6 - Percent yield of extracted material as a function of mixture composition for ethylenediamine/toluene.

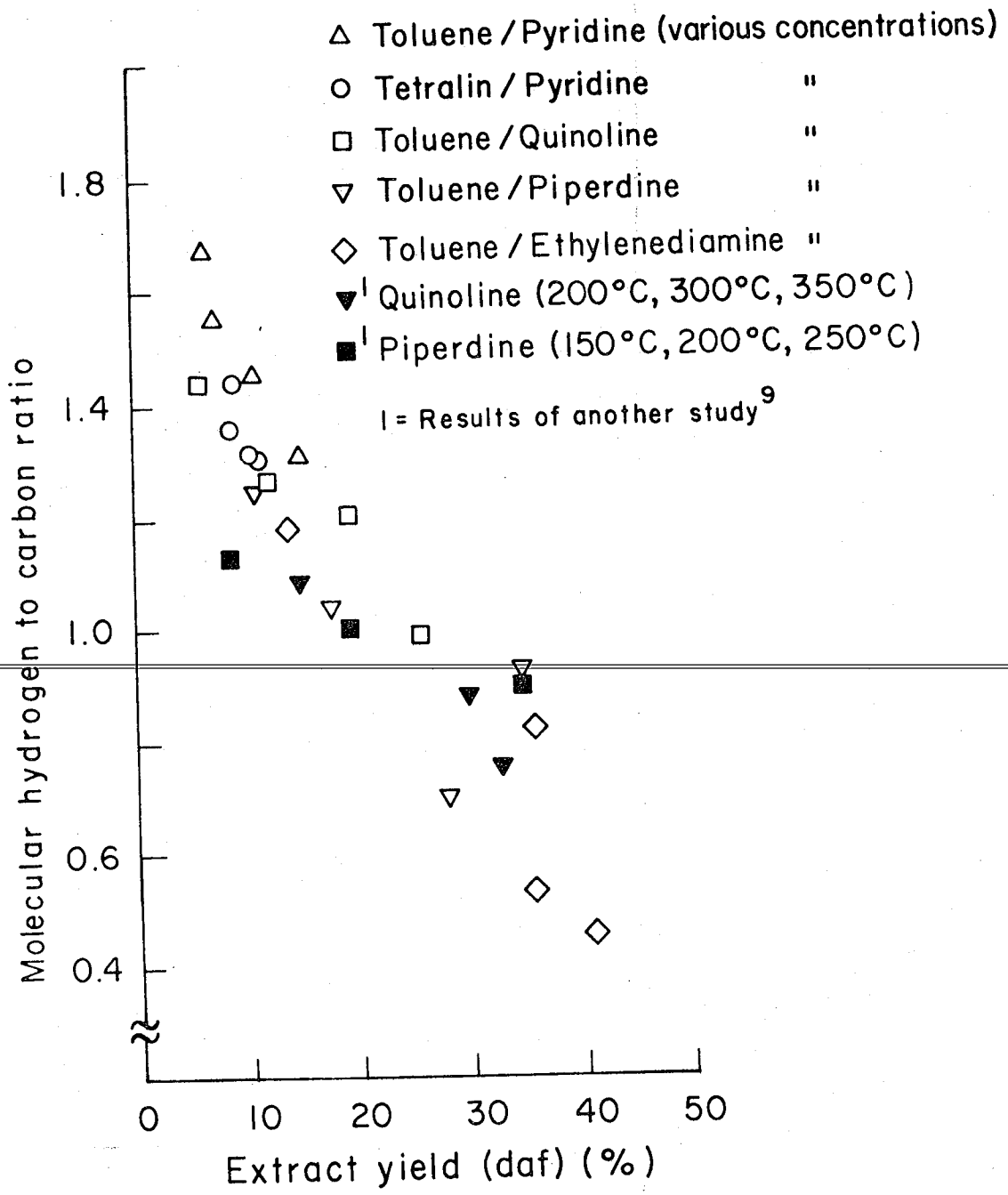

XBL 786 - 1121

Figure 7 - Molecular hydrogen to carbon ratio of extract as a function of extraction yield.

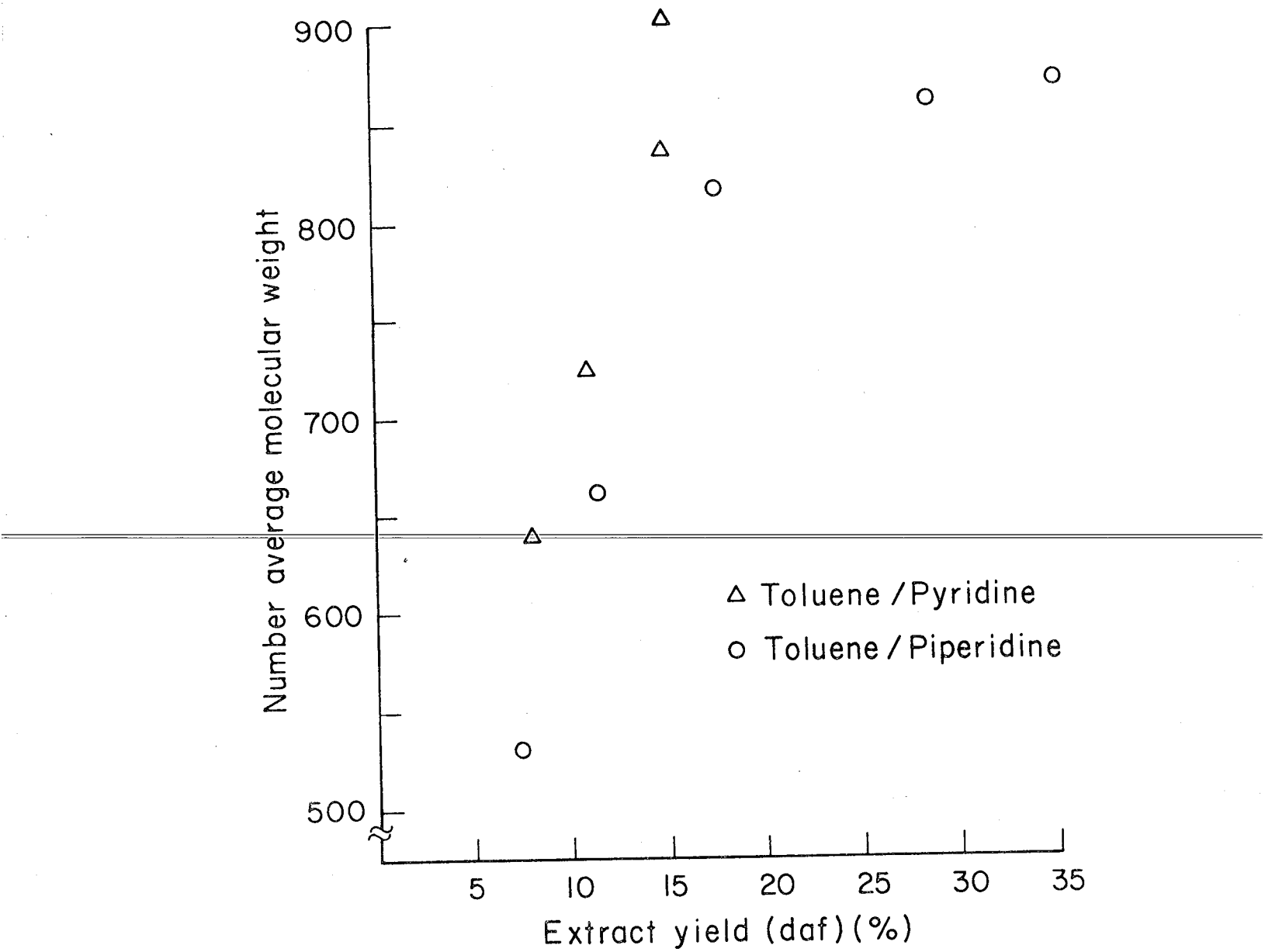

XBL 786-1122

Figure 8 - Number average molecular weight of extract as a function of extraction yield.

This report was done with support from the Department of Energy. Any conclusions or opinions expressed in this report represent solely those of the author(s) and not necessarily those of The Regents of the University of California, the Lawrence Berkeley Laboratory or the Department of Energy.

TECHNICAL INFORMATION DEPARTMENT
LAWRENCE BERKELEY LABORATORY
UNIVERSITY OF CALIFORNIA
BERKELEY, CALIFORNIA 94720