To be published in the Proceedings of the IEEE 29th Vehicular Technology Conference, Chicago, IL, March 28-30, 1979.

LBL-8288
UC-96 c.2

RELIABILITY IMPROVEMENT OF BART TRAIN CONTROL

David B. Turner
Lawrence Berkeley Laboratory
University of California

RECEIVED
AMES ICE
BERKELEY LABORATORY
JAN 19 1979
LIBRARY AND
DOCUMENTS SECTION

June 1978

Y
Thi opy
whi o weeks.
For call
Tec

Prepared for the U.S. Department of Energy under Contract W-7405-ENG-48

LBL-8288 c.2

LEGAL NOTICE

This report was prepared as an account of work sponsored by the United States Government. Neither the United States nor the Department of Energy, nor any of their employees, nor any of their contractors, subcontractors, or their employees, makes any warranty, express or implied, or assumes any legal liability or responsibility for the accuracy, completeness or usefulness of any information, apparatus, product or process disclosed, or represents that its use would not infringe privately owned rights.

RELIABILITY IMPROVEMENT OF BART VEHICLE TRAIN CONTROL*

David B. Turner
Lawrence Berkeley Laboratory
Berkeley, California 94720

Summary

We report here the two-year effort of a task group to improve the reliability of the Bay Area Rapid Transit district's vehicle-borne Automatic Train Control equipment. This effort included modifications to the train control equipment designed both by the manufacturer and by the task group. It also included the development and implementation of improved maintenance test procedures and equipment. A significant constraint on this effort was the need to maintain, and where necessary, improve the fail-safe nature of the train control system. Particular attention was paid to reducing the fraction of maintenance diagnoses which resulted in a No Trouble Found report; at the start of the task-team effort, these represented half of the revenue service failures of this system. A substantial improvement in the maintenance capability and decrease in service failures has resulted from this effort.

I. Introduction

The Bay Area Rapid Transit (BART) district began operations in January 1972 on the first completed section of its 78-mile, 1.6-billion dollar rail rapid transit route (see Figure 1). However, BART's long and loudly heralded opening as the nation's most automated rapid transit system did not provide the promised level of service, as start-up problems severely limited equipment availability and performance. Six years later, BART operations still provide limited service. It is now evident that some of the service design goals cannot be met without fundamental modifications to the original equipment.

Automatic Train Controls (ATC) are central to the promises and problems of BART operations. The ATC controls the motion of BART trains, moving them over designated routes to provide safe, rapid, and comfortable transportation to the patrons of the system. Specified by BART's engineering consultant, Parsons, Brinckerhoff, Tudor and Bechtel, and supplied by the Westinghouse Electric Company, ATC equipment is located on the transit vehicle, along the wayside and in the stations, and in the central computer facility. There are three functional elements in ATC:

1. Automatic Train Protection (ATP), which provides fail-safe speed limits for trains on switches and mainline, controls interlocking in a safe manner, and maintains safe separation of trains from each other.

2. Automatic Train Operation (ATO), which operates the trains as close to the ATP speed limits as possible, and provides station stopping, train identification, and route selection.

3. Automatic Train Supervision (ATS), which generates train dispatch commands, provides train schedule modification through control of station dwell times, and train speed restrictions; coordinates traffic flow through merges; and monitors and reacts to operational problems.

The ATP functions are similar to those of other train control systems. The unique level of sophistication of BART automatic train controls is embodied in the ATO and ATS functions. These were designed to eliminate the schedule variations that normally occur in manual train operations. However, the safety and reliability problems of the ATC system have to this point resulted in far greater service restriction than those that result from typical operator-induced effects.

A fundamental service limitation in effect at this time is the Computer Augmented Block System (CABS), in which the central computer contributes to a safety function by maintaining a one-station separation between trains. This headway restriction, which averages about two miles in the BART system, is required because of reported losses of vehicle detection by the ATP system. The Sequential Occupancy and Release (SOR) system, whose design began in 1973, will soon be implemented as back-up protection for loss of detection.[1,2]

The limitations imposed by CABS have exacerbated the effects of vehicle-borne problems. For example, because CABS will not permit single track operation, a vehicle train control failure slows down the entire line until the affected train can be removed at a pocket track or yard. The impact of these failures on revenue service, and those of other system components, caused BART to organize the Vehicle Reliability Taskforce[3] in April 1975, under the leadership of Mr. Anthony Venturato. This paper discusses the work of the Vehicle Train Control Group of that Taskforce.

The taskforce group operated, under various managers and titles, from May 1975 to June 1977. The group included members of the BART engineering and maintenance organizations, Westinghouse employees during the first six months, representatives of the Hewlett-Packard Company, who gave exemplary technical direction and consultation, and technical staff from the Lawrence Berkeley Laboratory. Most of the taskforce's work was done at BART's Hayward yard.

The work of the taskforce included the review of the Westinghouse modification to the BART vehicle train controls known as Phase V; the in-house generation and installation of the Phase VI modification to the train controls; and the design, construction, and application of improved maintenance test procedures and equipment. In these efforts, the elements of the program were: problem definition through failure data collection, problem system modeling, circuit modification where necessary, the development of new test procedures and equipment where necessary, circuit and system testing, and system implementation.

Special attention was paid to the development and measurement of a component tolerance budget for each element of key subsystems. This component tolerance budget was used to generate operational and troubleshooting test procedures for systems and their components. Operational test procedures are techniques for evaluating circuit performance. Troubleshooting procedures are used to pinpoint and correct the out-of-tolerance circuits which cause systems to fail operational tests.

A substantial decrease in failures in the areas affected by the task group has been achieved since the taskforce was organized. The success of this effort underscores the importance of in-depth studies of the causes of train control system unreliability. In

*Work prepared for the U.S. Department of Energy under Contract W-7405-ENG-48 and the Bay Area Rapid Transit District.

particular, we conclude that designs of new equipment to resolve equipment reliability problems must be made with full understanding of the causes of the failures; otherwise, the old problems will recur in new form.

II. BART Vehicle Train Controls

The Vehicle Train Control Electronics provides all functions necessary for normal automatic operation of the train. These include speed command reception, overspeed protection, door control, speed maintaining, performance modification, station stopping, train identification (ID), and status annunciation. Of these functions, the first three are vital, i.e., safety-related.

Industry practice requires that when a circuit providing a vital function fails, strictly designated results should follow. Specifically, the failure may not permit an unsafe condition to occur, e.g., opening of doors during transit, or negotiation of a switch at overspeed. This requirement of fail-safety is a major constraint on the system design, and greatly increases the difficulty of attaining reliable designs. Special circuits implemented through unique design rules are needed to provide even simple functions, such as linear amplification or digital signal ANDing.[4]

Figure 2 is a block diagram of the train control equipment. It shows the major subsystems: Speed Decoding; Speed Maintaining; Program Stop; ID, PL and Doors; and Trainline Interface. Of this equipment, the antennae, the speed decoding, and the speed maintaining subsystems have had the greatest reliability and safety problems. The antennae are mounted on the transit vehicle trucks and are subject to large shocks and vibration, for which inadequate provision was made. The structures of the other two key subsystems for automatic vehicle operation are discussed below.

The original vehicle train control equipment went into service in September 1972. A series of modifications to the equipment have since been made. The Phase I modification was already under consideration as revenue service began. The unsafe failure of car 143 at Fremont, one month later, prompted the Westinghouse designed and implemented Phase II and III modifications to the equipment. In Phase IV, beginning in Spring 1974, an independent monitor of vehicle speed command, speed, and overspeed status was installed. This equipment, known as the Overspeed Monitor Panel, provides a redundant but non-failsafe check of the vehicle's safety performance. Phase V was installed by Westinghouse beginning in June 1975 as a response to a safety problem of vehicle speed decoding and reliability problems of vehicle speed maintaining and ID circuits.

A. Speed Decoding

Figure 3 is a block diagram of the speed decoding subsystem. This subsystem receives speed encoded track signals from the wayside train control equipment, recovers the timing signals from the track signals, and decodes the speed command onto one out of seven control lines to the speed maintaining subsystem. An eighth code, the 0 MPH command, is not transmitted to the speed maintaining circuits, but maintains system timing.

The following digital codes are used to represent the speed commands:

Speed Command	Code bit position ABCDEF
0	100000
6	100001
18	101001
27	100101
36	100011
50	101011
70	100111
80	101111

A speed command is transmitted continuously at an 18 Hz bit rate by the wayside transmitter of each block, via the track circuit, which includes the running rails.

Speed commands are transmitted using Frequency Shift Keyed (FSK) signals. There are four pairs of frequencies for sending speed commands:

Frequency Pair	Logic 1	Logic 0
A	5.183 kHz	7.775 kHz
B	5.841 kHz	8.762 kHz
C	6.623 kHz	9.935 kHz
F	5.599 kHz	8.399 kHz

The track signal frequency is also phase shifted (by 180°) at an 18 Hz rate. This phase reversal is recovered in the vehicle to provide system timing.

The preamplifier clipper of the vehicle train control speed decoding equipment, located in a junction box beneath the cab, is connected to two antennae, one above each running rail. The antennae are connected to reject signals due to common-mode propulsion currents but to accept signals due to circulating track signal currents.

The voltage induced in the antennae is amplified, clipped, and attenuated in the preamp/clipper. The preamp output is brought up to the cab-mounted equipment, where it is transformer-coupled into the first set of crystal track signal filters. All inputs and all outputs of these filters are paralleled, providing a comb filter of the preamp output. These eight four-pole, 20-Hz bandwidth filters reject noise and non-track signal frequencies.

The output of the first set of crystal filters is then amplified and tested for threshold. If it exceeds vehicle threshold (equivalent to about 40-50 mA in the track circuit), an ac signal is gated on to enable the following circuits.

The amplified filter output is also fed to a clipper that drives the second set of filters. This clipper produces signals of uniform amplitude when the trace signals are above the threshold level.

The second set of crystal filters separates the "One" and "Zero" frequencies. All One outputs are connected together, as are the Zero. The Ones and Zeros feed separate amplifiers and rectifiers, which integrate the track signals with a single capacitor. The presence of a Zero frequency generates a positive voltage, while the presence of a One frequency generates a negative voltage on the capacitor.

The integrated waveform on the capacitor is then full-wave rectified. The presence of phase reversals in the track signals causes a null every 1/18th second in this rectified signal. An active tuned filter recovers an 18 Hz sine wave from the rectified track signal data. This frequency, phase shifted and squared, provides basic timing to the Speed Decoding, ID, and other systems of the Vehicle ATC.

The original integrated waveform on the capacitor is also strobed by the negative going edge of the recovered 18 Hz signal. Sufficient positive or negative voltage on the integrating capacitor at strobe time produces DTL logic pulse on the Zero or One signal line respectively. Phase V and VI modifications differ from earlier phases in that both One's and Zero's are required to exceed a certain threshold on the integrating capacitor. Previously, the absence of a One was presumed to indicate the presence of a Zero.

The One pulses are shifted through the six-bit delay shift register, and the resulting Delayed One signals are compared to the Zero pulses. This bit-by-bit comparison of the last two speed codes received by the vehicle performs two functions. First, each comparison must agree to provide a fail-safe power supply voltage to the fail-safe vehicle shift register. Second, the delayed, compared One's are entered into the fail-safe vehicle shift register. This five-bit register is a serial-to-parallel converter that presents parallel data to the decoder. A sixth bit, called Code F, is brought directly from the output of the six-bit delay to the decoder. For a valid speed code to be presented to the decoder the last two speed codes presented to speed decoding must agree. A single bit disagreement will cause the fail-safe vehicle shift register to be cleared. This in turn would cause the speed command to drop out for the time required for two new speed code words to be received, that is, 2/3 second.

The five outputs of the fail-safe vehicle shift register and the Code F signal are ac coupled to a tree of fail-safe AND gates. This tree detects the unique bit patterns of the valid speed commands as long as valid data is being received. Its output is a pulse every 1/3 second. The code loaded bit pattern $\overline{ABF}$, common to all valid speed codes, is also detected. The speed command and code loaded signals are presented to the speed command drivers, which develops a fail-safe negative voltage on the appropriate lines. These signals activate the speed command reference oscillators in the Speed Maintaining Cradle.

B. Speed Maintaining

Figure 4 is a block diagram of the Speed Maintaining subsystem of the BART Vehicle ATC and its connections to the vehicle. The speed maintaining subsystem performs five important functions:

1. Development of Speed Error (difference between commanded and actual velocity): This signal is derived from the speed command reference signal and vehicle tachometer inputs to the ATC. It is an analog dc voltage which is equal to 6.1 VDC for zero mph speed error and which changes 300 mV/mph of train speed error. It is used to control the demand for propulsion or braking by generating the propulsion, or P-signal. It is not a vital signal, and so can be overridden by the Brake 3 signal, discussed below.

2. Redundant Channel Comparison: Two redundant and parallel channels of speed error are compared at the balance detector. They must agree to within the operating tolerances; otherwise, propulsion is interrupted and full braking is applied.

3. Overspeed Detection: Four independent overspeed detectors monitor the two redundant channels of speed measurements. Any monitor indicating overspeed will interrupt propulsion by removing P-signal ac drive (PSACD).

4. BRAKE 2 Control: BRAKE 2 is the power/brake controller. When it is in the energized state (+37 V), the P-signal regulates the percentage of propulsion power applied in each car (0-100%). When BRAKE 2 is de-energized (0 V), the P-signal regulates the percentage of braking power applied. BRAKE 2 is a non-vital signal.

5. BRAKE 3 Control: BRAKE 3 is the vital signal which, when it is energized (+37 V) enables the train to remove full service brakes. When it is de-energized (0 V) full braking is applied in each car of the train.

Figure 4 shows the redundant speed command reference circuits, tachometer circuits and overspeed detectors. For each channel, the voltages proportional to vehicle tachometer frequency and speed command reference frequencies are summed in an amplifier that is part of the Overspeed Detector. When the summed voltage is greater than a reference signal, the Overspeed Detector stops putting out its underspeed signal to the following fail-safe AND gate. The absence of this fail-safe signal causes the train to begin full service braking by de-energizing BRAKE 3. Some of the analog circuitry combines the functions of non-vital Automatic Train Operation and vital Overspeed Protection. As noted above, one of the channels that compares command speed to train speed also generates a speed error signal, which ultimately controls the propulsion system of each car in the consist through the trainlined P-signal. The performance modification, cut-out car, and impeded mode signals reduce the propulsion signal by reducing the output of the speed command reference circuit. The program stop and jerk rate limit reductions take place in the P-signal voting circuit, which issues the lowest propulsion request of those two signals and Speed Error.

Several signals can reduce the speed maintaining P-signal below its speed command level. These include: cut-out car mode, in which a 50% speed penalty is enforced when brakes are cut-out in one or more cars in a train; impeded mode, in which a 25% speed penalty is enforced in low-adhesion condition; program stop, in which the speed is gradually reduced to zero in order to stop the train in the correct position at the station platform; jerk-rate limiting, in which the propulsion command changes slowly for passenger comfort; and performance modification, in which one of three reductions in high speed commands can be imposed by central control for schedule adjustment. Of these reductions, only the first two are vital functions, i.e., they must provide the rated reduction in the overspeed point or stop the train entirely.

III. The Phase V Modification

In June 1975, Westinghouse began installation of its last modification to the Vehicle ATC. This Phase V Modification consisted of safety-mandated changes to the speed decoding circuits, and reliability improvements of the speed maintaining and train identification (ID) circuits. TRW performed an analysis[5] of the safety impact of the speed decoding modifications on the system. The newly formed Vehicle ATC group of the Vehicle Reliability Taskforce began evaluation of the speed maintaining and ID modifications.[6] Because of reliability problems in speed decoding, and a scaled-down Westinghouse modification effort, the last car was not modified

until March 1977. The following discussions detail the problems which prompted the modification to be considered, the changes made in the modification, and the repercussions of the modification in the BART District.

A. The ID System

The ID system receives a train's destination, serial number, and train length from the central computer, holds it in memory, and retransmits it as the train travels. The ATC equipment uses this information to respond to route requests, illuminate station destination signs, and determine the correct stopping position at station platforms. Previously, noise of unknown character caused the ID message to change between terminal points, which disturbed the automatic operation of the associated functions. The Phase V modification added logic to the ID system so that an ID change could occur only after a prescribed sequence of events at a terminal point. The modification decreased the incidence of wrong ID changes, but it also frequently prevented normal ID changes. This problem was addressed again in Phase VI.

B. Speed Maintaining

As described in Section II.B, the Speed Maintaining subsystem responds to the Speed Decoding subsystem by generating the BRAKE 2, BRAKE 3, and P-signals necessary to bring the vehicle to the desired speed. Program stop, performance limitation, jerk rate limit, cut-out car, and impeded mode signals can reduce the propulsion commands generated by this subsystem. The subsystem includes both the vital overspeed protection functions and non-vital automatic train operation function.

In Phase IV, the maintainability of this mostly analog subsystem was poor. Boards from "correctly" operating systems were not interchangeable. No error budget for operating tolerance existed. Operating specifications, including margins of safety, were loosely defined. Certain combinations of boards caused intermittent unreliable operation in revenue service, but provided no indication of what the problem circuits were. Existing test equipment and procedures could neither define system nor board performance precisely enough to correct this situation.

The Phase V modification to Speed Maintaining attacked this situation by upgrading components to substantially reduce the tolerance stackup on these circuits. Instead of using Select-on-Test resistors in elaborate yet ill-defined test procedures, Westinghouse used 0.1% tolerance resistors to control circuit parameters. The purpose of this substitution--board interchangeability--was not quite achieved. However, a major step was made towards the de facto definition of a system, board, and component tolerance budget. Westinghouse suggestions were incorporated into operational and troubleshooting test procedures by the taskforce group. These procedures allowed technicians to monitor and repair speed maintaining circuits without inevitable recourse to random board-swapping.

The Westinghouse approach towards the solution of reliability problems is not the only one available. In fact, in the similar Taskforce work in Speed Decoding, similar results were achieved by first composing an error tolerance budget for the subsystem. Existing parts were then screened using the new test procedures and test equipment, and out-of-tolerance components were replaced. This process is easiest to implement during manufacturing, but can be done as a maintenance engineering function when it has been neglected. The key to reliability is maintainability; and the first step is the detailed definition of normal component tolerances and their effects on normal circuit operation. This information--the component tolerance budget --is used to generate the tools necessary to maintain the system.

C. Speed Decoding

As discussed in Section II.A, the Speed Decoding subsystem receives track signals from the wayside train control equipment, recovers the modulating timing signals, and determines which of the eight possible speed commands was transmitted by the wayside. As noted previously, prior to Phase V the absence of a recognizable One signal was assumed by speed decoding to be a Zero in an otherwise recognizable speed code word. This default logic state, combined with a design deficiency of the track signal crystal filters, caused erroneous speed decoding of a higher speed under certain circumstances. As a result, trains violated the speed limit of the ATP system. In particular, the ringing response of the narrow bandpass filters in the speed decoding circuits caused a condition known as Stretched One's, which changed the transmitted speed command to a higher one.

Westinghouse corrected this problem in the Phase V modifications by including the requirement that a Zero must be received with the same power level as a One to allow a speed command to be decoded. This prevented the most common form of Stretched One's from causing erroneous higher decoding, in which the weakened Zero's did not exceed the necessary power level.

This modification was tested on four vehicles for a three-month service period without a detected failure. However, within two months of the start of the full-scale modification effort, it presented a major maintenance burden when many modified sets of speed decoding circuits would not work reliably in revenue service. Yet no component had obviously failed, and no specifications existed to aid maintenance in changing existing circuit values.

There were two responses to this problem. An interim modification was made which overcame the near-term maintainability problem at the expense of safety margin and long-term reliability. This was achieved by decreasing the power level required by the speed decoder for One's and Zero's. (Note that even with this temporary modification, or T-mod, the trains were less prone to wrong decoding than in Phase IV). The second response was to bring Drs. Oliver and Cutler of the Hewlett-Packard Company into the taskforce. They directed an investigation and modification program which ultimately provided the solution to the reliability problem. That effort became known as Phase VI.

IV. The Phase VI Modification

Phase VI[4,7] was the first major modification to the ATC equipment designed at BART. It was beneficial to the District because it alleviated significant subsystem problems that had caused daily disruption to revenue operations. Further, it provided a deeper base of detailed theoretical and practical understanding of equipment operation. As such, it was typical of the efforts of the Vehicle Reliability Taskforce, which developed within BART's engineering department the capabilities to solve serious design and application problems, rather than merely maintain "turn-key" equipment. The taskforce, whose charter was to uncover and repair the causes of unreliable operation, developed insight, tools, and capabilities necessary to attain that goal. Those capabilities, and the ability to understand the smallest detail of equipment performance as well as the system effects, are necessary to success in bringing advanced technology to public application.

Phase VI is a set of design changes to the BART Vehicle Automatic Train Control. Its purpose is to correct certain known reliability problems and unsafe failure modes, and reduce the likelihood of other unsafe failure modes in the ATC. The subsystems modified are Speed Decoding, ATP Brake Reaction Times, ID performance level, Speed Maintaining and the power supply.

The Phase VI Speed Decoding Modification incorporates the following reliability improvements to the 'front end' portion of the Speed Decoding electronics:

1. The careful balance of One and Zero channel gains from the preamp/clipper through the speed code discriminator.

2. Changes to decrease circuit sensitivities to variations in track signal frequency, temperature, electronic noise, and circuit and component tolerances.

3. Changes to eliminate known marginal operating conditions of the speed decoding circuitry; for example, time race conditions to the control inputs of a latch.

4. Changes to eliminate the overstressing of some components.

5. The creation of test procedures and specifications which permit good control over the desired operating parameters of ATC circuits.

The Phase VI Speed Decoding Modification reduces the propensity to certain unsafe failure modes of ATC, notably:

1. The failure mode known as Stretched One's, by which the speed code is interpreted to contain extra One's, commanding erroneous higher speeds. This possibility has been minimized by dampening filter responses, carefully balancing amplifier gains, and redundantly grounding filters. The tendency to this failure mode is inherent in the present Track Signal Filters.

2. Reduction of the vehicle track signal threshold. This unsafe failure can result from certain unannunciated component degradations. It could allow the vehicle to respond to crosstalk rather than valid track signals, and thus proceed unsafely. The extent to which threshold can decrease has been minimized.

The Phase VI Brake Reaction Time Modification is a safety-related change. The modification affects the time required for a vehicle to begin braking after receipt of a lower speed command. These times are related to the minimum allowable distance between trains. This modification establishes control circuits, specifications, and measurement techniques for the reaction times of the ATP to changes in speed command.

Additional reliability improvements have been incorporated in the ID, Performance Label, Speed Maintaining and Power Supply circuitry. The problems corrected by these changes occurred so frequently that they were normally unreported, and if reported, resulted in No Trouble Found diagnoses. The changes correct known failure modes such as:

1. Performance Level commands changing between stations.

2. ID's failing to automatically load at terminal zones.

3. ID's and Performance Levels incorrectly loading.

4. ID's improperly displayed.

5. Intermittent circuit failure of the Speed Maintaining Underspeed Oscillator.

6. ATO Power Supply circuit breaker tripping upon turn on.

The Speed Decoding Modification was the largest part of the Phase VI effort. Generally, it was a response to the reliability problems introduced by the Westinghouse Phase V modification. There, the primary symptom of unreliable operation was poor waveforms on the integrating capacitor of the Speed Code Integrator and Discriminator (209P476 card). Amplitude of the recovered One and Zero signals was very close to the minimum decodable level, even for the maximum track signals. The phase shift between the 18 Hz clock and data on the integrating capacitor was poor, so that the signal was not being strobed at its maximum. Performance of the data recovery circuit was so poor that vehicle speed decoding was often disabled by the inability to recover data, rather than lack of signal strength.

The marginal design of the data recovering circuit made Speed Decoding quite sensitive to small variations in track signal frequency. In addition, the differences in delay characteristics of the track signal crystal filters produced jitter of the 18 Hz clock. This jitter was also frequency dependent, and caused card compatibility problems for some frequency pairs.

Many of the safety and reliability problems of BART vehicle speed decoding are ultimately traceable to the operation of the track signal crystal filters. These filters are four-pole, underdamped bandpass filters, with a bandwidth of 20 to 27 Hz at the 3 dB attenuation points. The choice of an underdamped filter is undesirable for signals whose burst period is shorter than or equal to the delay time of the filter. This is because the underdamped filter has a ringing overshoot response to short burst inputs. For BART's filters with bursts at 18 Hz, the ringing amplitude can be as much as 30% of the original burst output. Figure 5 shows a typical filter response to a simple 18 Hz burst of its nominal center frequency.

This ringing of the filters creates the Stretched-One's that can cause erroneous higher speed decoding. The filters and the speed decoding subsystem are particularly sensitive to track signals with unbalanced amplitudes between One's and Zero's, and to detuned track signal frequencies. The tendency to wrongly decode these signals was minimized in Phase VI by careful choice of circuit parameters.[4] Even so, there are problems in the response of these filters that recommend long-term redesign and replacement.

In May 1976, the Phase VI Vehicle ATC modification installation began. This program floundered, in part because of reliability problems in the speed decoding subsystem. All investigators agreed that these problems were not caused by the modified circuits, which functioned well. Why, then, was the modification effort unsuccessful?

Basically, it is because the original BART ATC system, taken as a whole--hardware, test equipment, procedures, and documentation--contained design defects and marginal conditions. These interwoven shortcomings have made the formulation of simple solutions to systems problems impossible. The Speed Decoding Subsystem,

particularly its analog front end, exemplified the problems of ATC. The design flaws of Phase V were corrected by Phase VI, and operational test specifications were provided for the modified circuits. Despite the modification, reliability problems still persisted. These problems were at first attributed to Phase VI engineering and jeopardized this modification phase. It was finally determined that Phase VI modifications were working, and problems were caused by undetected failed hardware in the unmodified circuits of the subsystem. These circuit problems had not been evident because of a lack of adequate test procedures. Thus, the primary result of the intensive engineering study at the time of the modification was the replacement of this failed hardware.

Performance requirements for all parts of the speed decoding subsystem, and for ATC in general, can be specified. For example, it is necessary that the vehicle track signal threshold exceed a certain limit in order to reject crosstalk signals. It must also be less than a higher limit to ensure reliable operation of the vehicle. Although these limits are only roughly known [about 20 mA peak-to-peak (p-p) rail current for cross talk and 80 mA p-p for the smallest valid signal], a safe margin range of 30-50 mA p-p can be chosen. This specification on the speed decoding subsystem response has implications for all of the elements of that subsystem. For each one, a nominal response and tolerance exists. Starting with an imperfect operating system, we calculate and measure responses and tolerances of each component. How these elements fit together, and how close they come as a subsystem to meeting the final tolerance is a measure of the adequacy of the subsystem design. That is, the summation of the component tolerances yields a maximum and a minimum value for the subsystem response. This is the bottom line of the system tolerance budget. In our case, it is possible (though not inevitable) for a set of "good" parts to yield a "bad" whole; that is, an ATC speed decoding subsystem whose threshold falls out of the specified 30-50 mA p-p range. This is one of the marginal aspects of the ATC system.

There are two engineering alternatives by which such problems can be solved: redesign and rework. In either case, pains must be taken to avoid the pitfalls of the original design. In the case of the Taskforce effort, management made the decision for corrective rework.

Correcting a situation like this requires the analysis of the system tolerance budget and data collection, specification, development, and circuit modification. The process is sometimes iterative. How extensive this reliability improvement cycle must be depends on the degree of conflict between the actual and desired system responses. For BART, the tightness of specification necessary to allow effective maintenance is not unusual for the electronics industry but is extreme for the transit (or even automotive) industry. Even so, the final result of such an engineering effort can be a reliable, interchangeable system which performs near its maximum potential. When the process is complete, the capability of the system can be measured against need or convenience.

For BART's Track/Vehicle interface, the elements which contribute to the system tolerance budget fall into two groups: those belonging to the track circuit and those in the vehicle. This group's work addressed the behavior of the vehicle's components. We developed a new trouble-shooting data sheet, whose specifications were a first attempt at a workable system tolerance budget--one which would provide component interchangeability and enhance maintenance. To support this new procedure, LBL and BART have modified BART's Vehicle ATC Special Test Equipment (STE). The STE's job is to simulate the signals sent by the BART wayside train control to the vehicle ATC on the one hand, and monitor the response of the vehicle ATC on the other. The STE is used on transit vehicles in the maintenance shop and on ATC sets in the Electronic Repair Shop (ERS).

V. Special Test Equipment (STE)

The STE is the primary maintenance tool for BART Vehicle ATC equipment. It is schematically represented along with the ATC equipment in Figure 6. Figure 7 shows the front panel of the STE. It tests the key subsystems of ATC by providing simulated inputs through the vehicle antennae normally used in revenue service. Electrical connections are used to simulate vehicle tachometer signals, to monitor vehicle responses to simulated signals, and to simulate the effects of the rest of the train. The new STE fully tests the Speed Decoding, Speed Maintaining, ID, Program Stop, Overspeed Monitor Panel, and Trainline Interface Subsystems of ATC.

The method of testing the vehicle ATO is to apply a stimulus to the circuit or subsystem of interest, monitor its response, and compare that response to specified limits. The ATO circuits generally require unique coded signals as stimulus, which the STE subsystems provide. Similarly, specialized processing and analysis of response signals simplifies the technicians' task of evaluating the performance of the system.

The test equipment is designed to be used in conjunction with the "Transit Vehicle ATC Test Procedures (Phase VI)." This document gives step-by-step instructions to the technician for certification of proper function of the vehicle ATO. Selected responses are recorded which document system performance.

This is the third generation of BART ATO test equipment. Westinghouse supplied a monitor device which provided a fixed input (two speed codes, one ID, etc.) and some indicating lamps. In addition, they specified extensive tests using conventional test equipment. This combination was awkward and was abandoned. The result was that the unsafe failure of car 143 was not detected by maintenance, but instead caused a mainline accident. The second STE was built at BART. It included most of the functions present in the third model, but often with less accurate simulation, control, and measurement capability. Those shortcomings were corrected and certain test capabilities and conveniences were added in the present design.

A. Testing and Speed Decoding Subsystem

One of the chief shortcomings of the old STE was in its simulation of the effects of the track circuit, i.e., the track signal command path. The signal with which the STE drove the vehicle track signal antennae was very poorly shaped. The coupling between the STE and ATC was uncontrolled, and did not accurately simulate actual coupling. The amplitude of the track signal had two uncontrolled frequency dependencies. There was an uncompensated variation in coupling due to vehicle track signal antenna height.

The effort undertaken to correct these shortcomings was desirable for several reasons. First, it was impossible to make an accurate measurement of vehicle track signal threshold. Thus, it was not possible to tell whether a vehicle's response was within the desired range. Second, without a standard track signal, known coupling, and system and component specifications, it was extremely difficult for maintenance technicians to troubleshoot speed decoding front end problems (i.e., track signal antennae, junction boxes, filters,

amplifiers, and threshold circuits). The results of this situation were inadequate and inefficient troubleshooting, reuse of marginal components, and, as noted above, intermittent failures. Experience with the tools, procedures, and capability of BART maintenance suggested that this area was particularly in need of improvement.

Figure 6 shows a block diagram of the ATO as tested by the STE. The major functions indicated on this block are unchanged from the earlier STE. Figure 8 shows a more detailed block diagram of the STE Speed Decoding subsystem. Each of the circuit blocks of the STE Speed Encoder is new.

The important features of the modified STE Speed Encoder are:

1. Speed Code Generator capability to transmit continuous One or Zero frequency signals. Previously, the STE transmitted all its signals with 18 Hz phase reversals. The availability of a continuous signal is important for component-by-component troubleshooting.

2. Improved Track Signal Shaping. The old STE Transmitter and Transit Antenna were badly distorted, transmitting many harmonics and an unpredictable amount of the desired fundamental. The new shaper card, which replaces the transmitter, drives the new transmit antenna with a clean sinusoidal signal. This is a good simulation of the actual track signal, and allows direct comparison of track circuit and shop performance.

3. Improved Track Signal Transmit Antenna. The new antenna incorporates three major improvements: more realistic simulation of the rail current magnetic field; Left/Right/Both track signal antenna test capability; and a calibration check of the STE Speed Encoder.

Improved simulation of the field was achieved by lengthening the Transmit Antenna to better approximate the current path in the rails.

Extra loops and switching were built into the antenna to allow the technician to drive either the Left or Right antenna singly. This greatly simplifies the task of finding open or weak antennae and cables.

4. Track Signal Antenna Monitor Amplifier. The addition of this amplifier allows the technician to monitor the output voltage of the antenna or the input voltage to the Preamp/Clipper. It is an invaluable aid to troubleshooting both devices on the vehicle. It has been particularly valuable for isolating opened or shortened antennae, which were a major vehicle train control reliability problem.

5. Track Signal Antenna Height Compensation. In the old STE, coupling from the STE's Track Signal Transmit Antenna to the Vehicle's Track Signal Antennae depended on wheel size of the A car involved. This switch permits selection of the correct calibration resistor to compensate for the differences in antenna height due to wheel size.

6. Digital Display of Track Current Amplitude. A 3-1/2 digit AC DVM was incorporated into the STE to give accurate track signal measurements. It can also be used as an external AC meter. Resistor R_{METER} calibrates the frequency response of the STE Speed Encoder.

The right half of Figure 8 shows the front end of the vehicle ATC Speed Decoding subsystem. Phase VI modified the Threshold Converter circuit and the Data and Timing Recovery circuits (not shown). The rest of the front end is substantially unchanged by Phase VI.

As noted above, the initial Phase VI effort failed, in part because of reliability problems. Initially, there were no simple tests to quantify the behavior of the components, and the overall threshold test was extremely unreliable.

The first step in rectifying this situation was to study the Track Circuit/Vehicle Interface itself. To this end, we designed and built a Current Injector, a device which can drive open-ended stub tracks with properly shaped variable amplitude track signals or continuous single frequencies. This equipment is the ancestor of the newly modified STE.

After calibrating this current injector and checking it against BART's track current measurement device, we used it to measure the track signal threshold of a vehicle. Good agreement with the value obtained by using wayside equipment was obtained.

The next step was to build the Track Signal Monitor Amplifier to measure antenna voltages. This differential buffer amplifier was necessary to avoid loading the outputs of the high impedance track signal antennae.

With the capability to inject a known current in the rails and measure the antenna voltage, we could quantify track circuit/vehicle coupling. Engineering Test Car 164 was equipped with adjustable antenna brackets so that antenna height could be varied. This allowed us to study the coupling change caused by the variations in wheel diameter. (New wheels are 30" in diameter. As they wear, they are cut down to a minimum of 28".) Thus a set of curves was drawn showing antenna voltage versus frequency and height for a fixed track current. Typical curves are shown in Figure 9.

Our purpose was to duplicate the effects shown in Figure 9 in the shop. To do so, we had to accommodate the differences in coupling. An ideal test scheme for ATO would include open-ended sections of mainline rail set into the barn floor, into which current could be injected. Recommendations have been made that future BART facilities include such rail. Unfortunately, extensive changes would be required to the present shop floor to permit such a test fixture. So, we use a large three-turn wire loop laid on top of the rail to signal the vehicle. Data from that setup is presented in Figure 10. In it we observed two systematic coupling problems which must be compensated by the test equipment.

The first reflects the difference in current centers between the rail (about two inches below the head of the rail) and the shop transmit antenna (about one-half inch above the rail). The calculated effect on vehicle antenna voltage is shown in Figure 11. Note that if a scale factor is chosen so that antenna voltages agree for a given antenna height, there is a systematic error for other heights. This is detailed in Figure 11. Compensation for this effect is ultimately provided by the Antenna Height Compensation Switch described above.

The second problem which complicates the coupling relationship is a frequency-dependent variation in field generated by the rail. Comparisons of data between Test Track and the shop floor at a fixed height revealed a frequency-dependent coupling ('K') factor shown in Figure 12. This newly noted effect is nulled by correct choice of the R_{METER} resistor

associated with the track current level digital display when the STE is calibrated.

With these effects under control, we achieved good correspondence between test track antenna voltage measurements made in the shop and on the test track. Time and resources limited our data collection, but our small sample has given us a good idea of the typical response of a complete vehicle front end. Data collected in this work yielded operational specifications for gain of the antenna, and provided the data for a construction/checkout procedure for the manufacture of this expensive item in the BART shops.

The capability to measure antenna output (which is the Preamp/Clipper input) and the availability of sine wave drive made measurement of the preamp characteristics easy. That data was used to create operational specifications for preamp gain and chip level, and as with the antennae, made in-house construction and calibration possible. Continuous sine wave drive also makes ATC filter testing possible. The specifications created for these tests expand the individual crystal filter specifications to accommodate the in-circuit loading. Min/Max specifications, here as elsewhere, aid the testing of components as they are actually used in the circuit.

In a similar manner, tests with min/max specifications for each of the boards installed in the subsystem were created. These specifications permitted the isolation and replacement of defective components, and the development of interchangeability criteria. This is the desired goal, where the component tolerance budget is used to create a straightforward set of tests for maintenance workers.

B. Other Changes to the STE

Other changes to the STE provided capabilities for testing certain functions of the train controls that had previously been checked only in revenue service. Changes were made to the data displays to ease operation of the equipment and interpretation of the results.

The most important addition to the STE was the capability to measure the vehicle reaction time to changes in speed command. As mentioned in the Phase VI discussion, this reaction time contributes to the train stopping distance. As such, it is a safety-related function and is thus checked at safety inspections.

The diagnostic display for the ID system was changed to show the actual ID numbers, rather than just bit patterns. A new test was added to check the function of the tail-car performance modification circuits. Other display and measurement capabilities were improved.

VI. Conclusions

A substantial improvement in vehicle train control was achieved by the Vehicle Reliability Taskforce Train Control group. This goal was achieved through a long-term program of vehicle subsystem evaluation, testing, and modification; maintenance procedure and equipment development; and integration of efforts into the BART District operations. A careful, comprehensive study of the causes of reliability problems was seen to be a mandatory first step in improving equipment performance in service. Further, the improvement of maintainability through the development of a system tolerance budget and corresponding maintenance tools and procedures was the deciding factor in the successful application of the modification to the revenue service fleet.

The author concludes that system evaluation and modification should be pursued to achieve better service reliability, rather than band-aid fixes or changes in operational procedures in an effort to minimize the impact of failures.

VII. References

1. Prepared Statements and Exhibits of the San Francisco Bay Area Rapid Transit District for the California Public Utilities Commission, Application No. 57727, Exhibits 3 and 4. Bay Area Rapid Transit District, Oakland, CA, 1978.

2. Sequential Occupancy Release (S.O.R.) Manual, Vols. 1-4. Westinghouse Electric Corporation, Transportation Division, West Mifflin, PA, 1975.

3. Scalise, D.T., and Evans, D.M., LBL Role and Recommendations with Respect to PUC Hearings on BART Safety Appliances and Procedures. Lawrence Berkeley Laboratory, Berkeley, CA, 1975.

4. Revenue Vehicle ATO-Phase VI. Bay Area Rapid Transit District, Oakland, CA, 1976.

5. Wyse, Richard E., BART Safety/Availability Study. Limited Analysis of the Speed Decoding Subsystem (Cradle 1, 2) of the BART Automatic Train Control System. BART 74-111, TRW, Inc., Redondo Beach, CA, 1975.

6. Archie, Batiste, Evans, Lowder & Turner, Phase V ATO Analysis. Bay Area Rapid Transit District, Oakland, CA, 1975.

7. Chawla, B., Safety Analysis of Phase VI Modifications of Vehicle ATO. Bay Area Rapid Transit District, Oakland, CA, 1977. BA-ENG-77-V6-1.

VIII. Acknowledgments

The improved service performance of a system as complex and distributed as BART's train controls can only result from the combined efforts of people in many jobs and many places. At the core of this group were Jim Archie, Dave Bennett, John Evans, Claude McCall, and myself. Outstanding technical direction and participation were given by Drs. Barney Oliver and Leonard Cutler of the Hewlett-Packard Company. Determined and intelligent program direction was provided by Tom Pappas of BART. The continuing interest and support of Elmer Bailey and the Electronics Repair Shop were invaluable. At LBL, much vital direct and indirect support came from the Engineering Sciences Department and the Special Projects Group; and Gloria Chua and others at the Technical Information Department helped to make this work ready for publication. Many BART staff, technicians, engineers, and students gave hours of time and attention to this project, without which none of its benefits would have come to fruition. Thanks to all.

CBB 777-6733

Figure 1. BART car and automatic train control equipment.

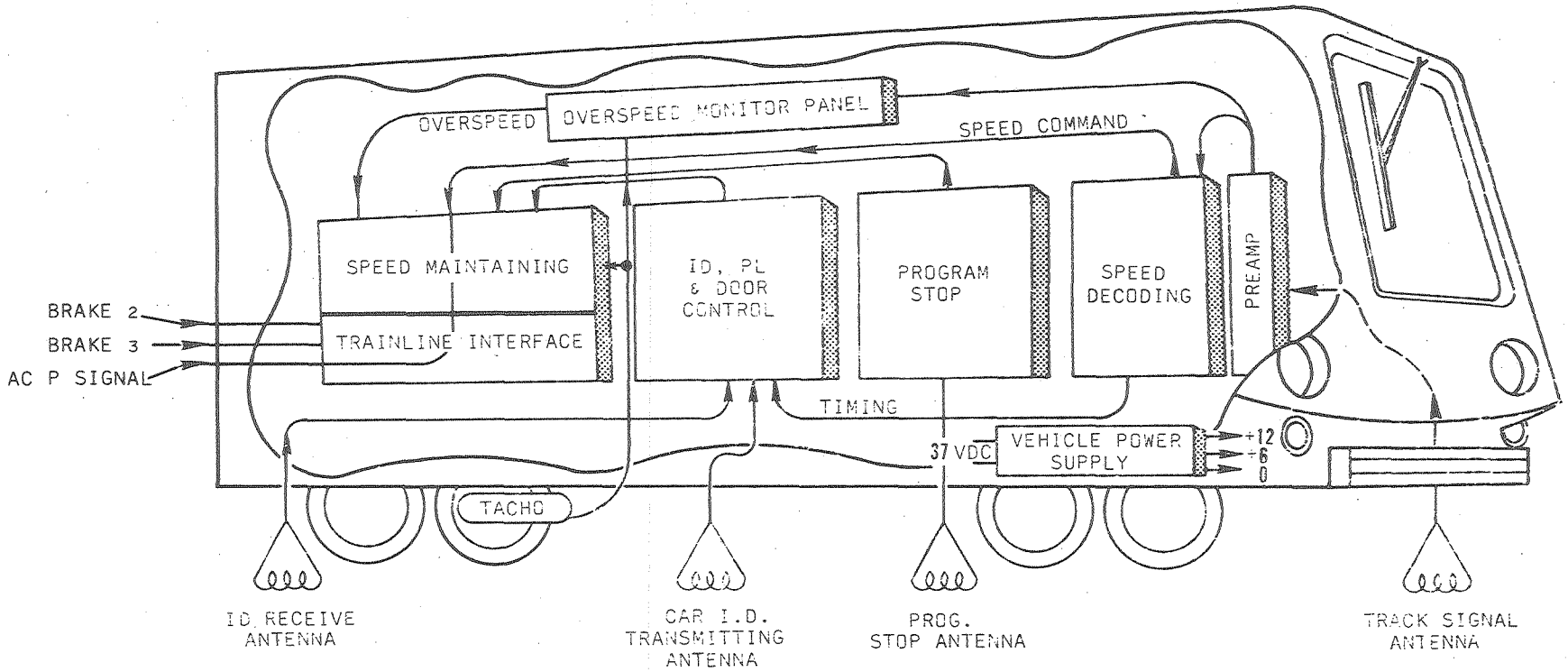

Figure 2. BART vehicle automatic train control (ATC) equipment.

XBL 7810-11919

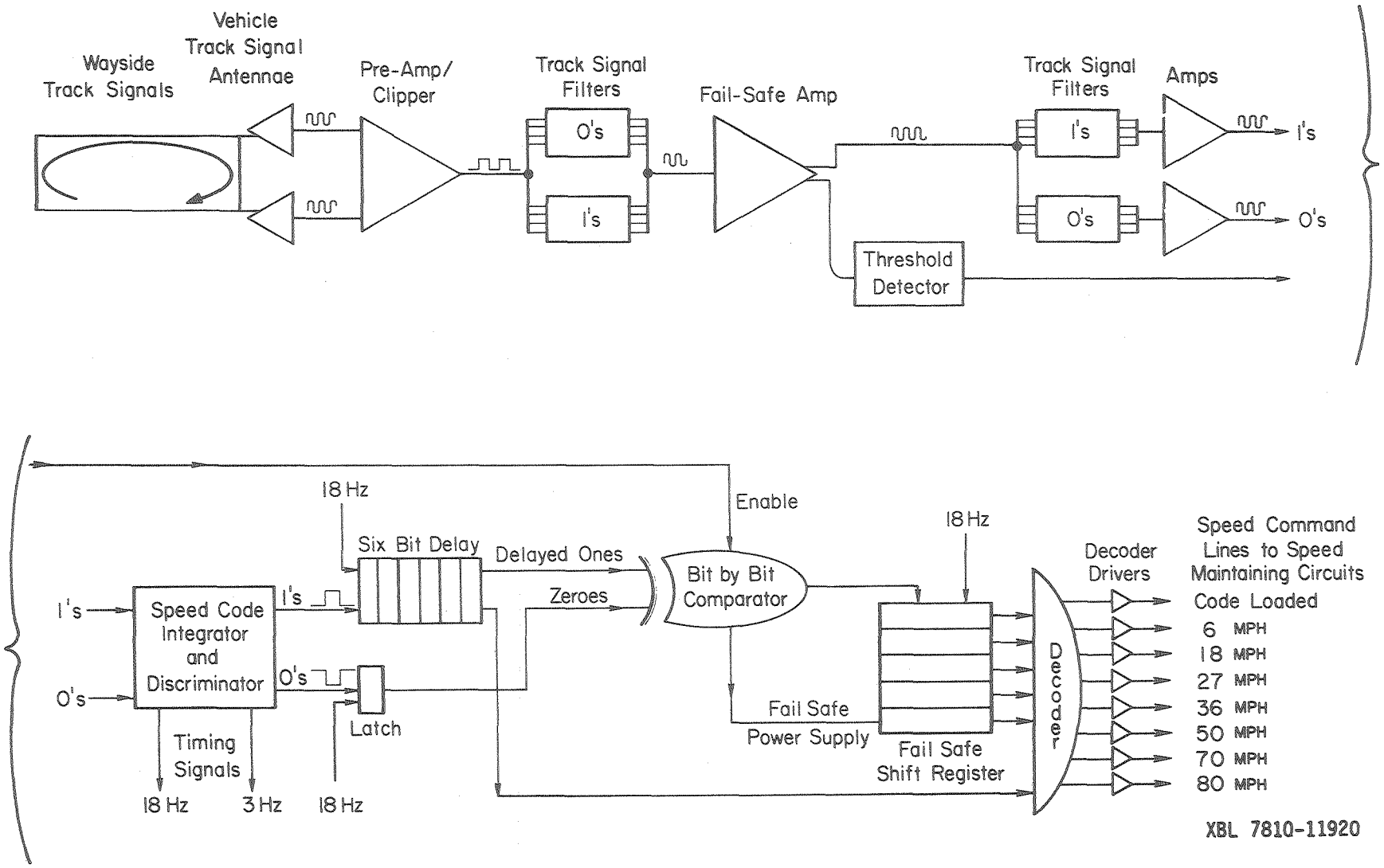

Figure 3. BART vehicle train control speed decoding subsystem.

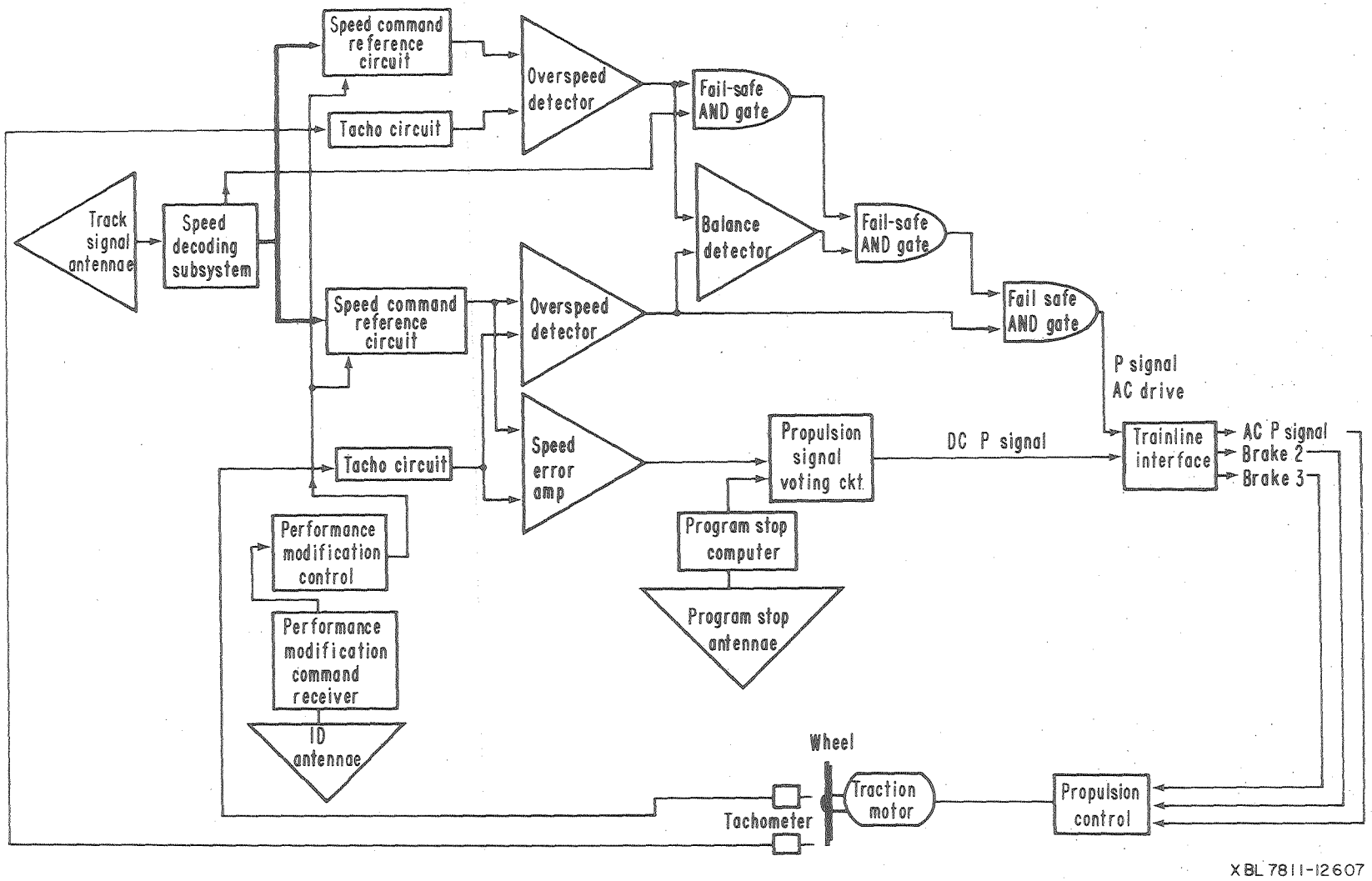

Figure 4. BART vehicle train control speed maintaining subsystem.

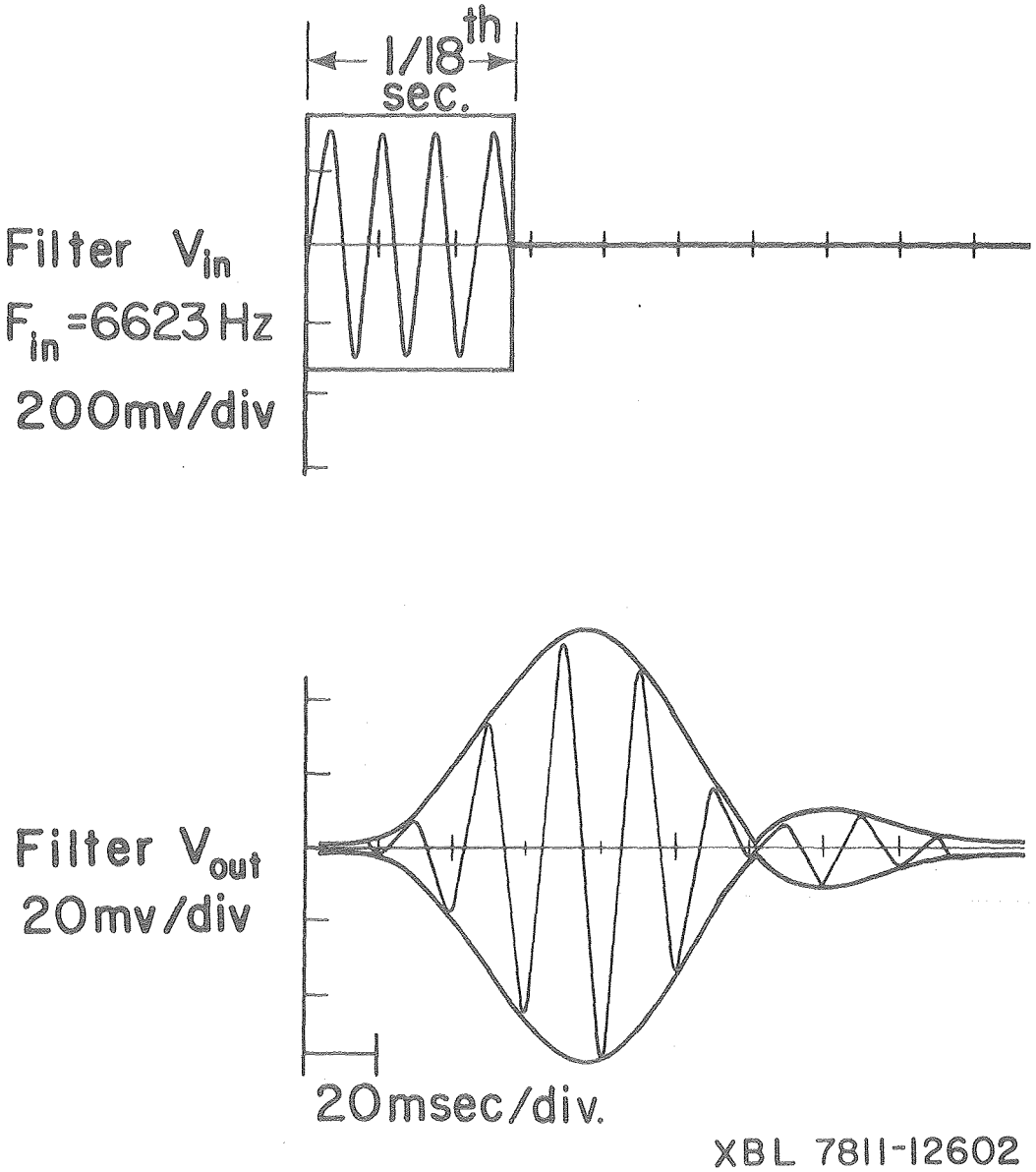

Figure 5. Response of a typical BART track signal filter to a 1/18 sec burst of signal.

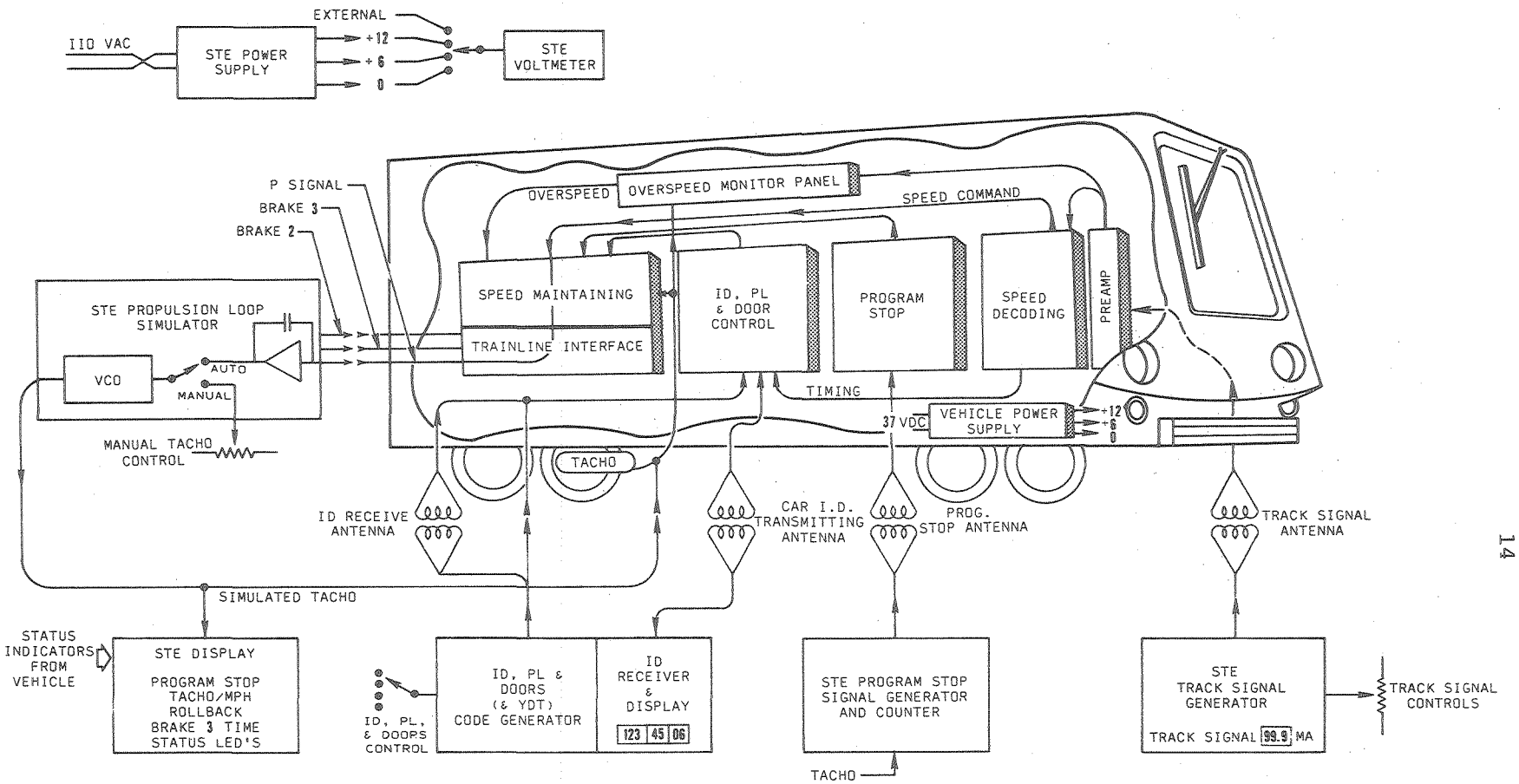

Figure 6. BART vehicle train controls (ATC) and special test equipment (STE).

XBL 7810-11917

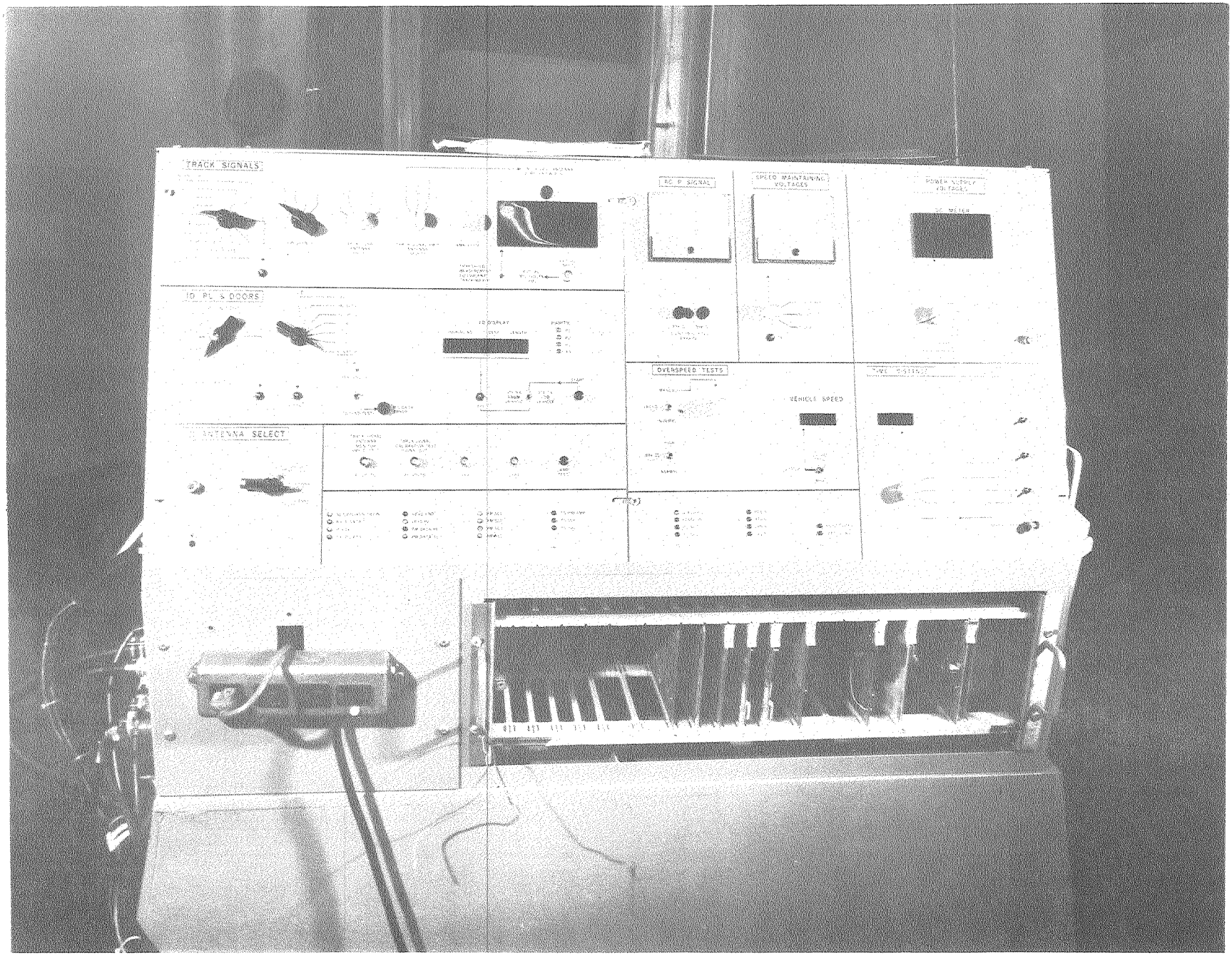

Figure 7. Test simulation of the track circuit-vehicle interface.

CBB 777-6731

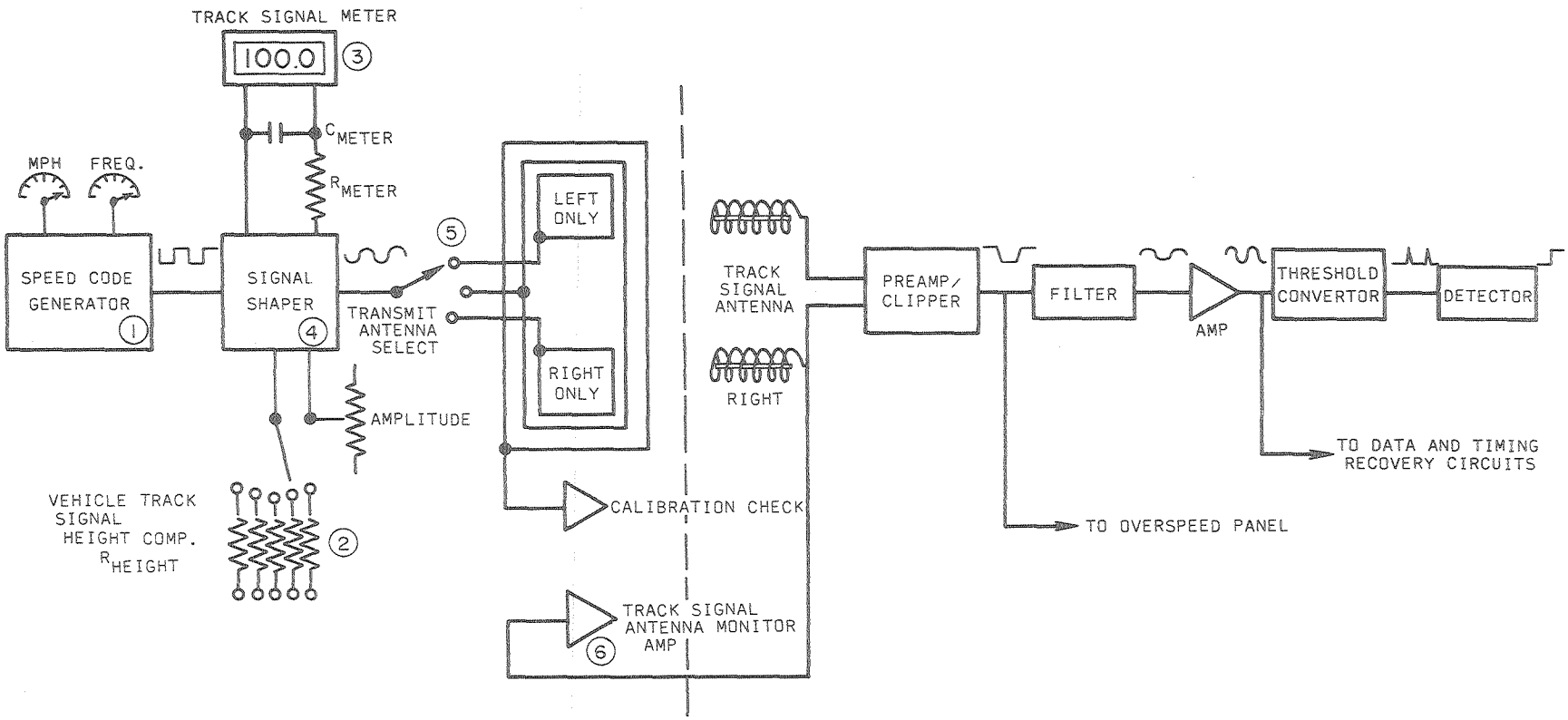

Figure 8. Test simulation of the track circuit-vehicle interface.

XBL 7810-11916

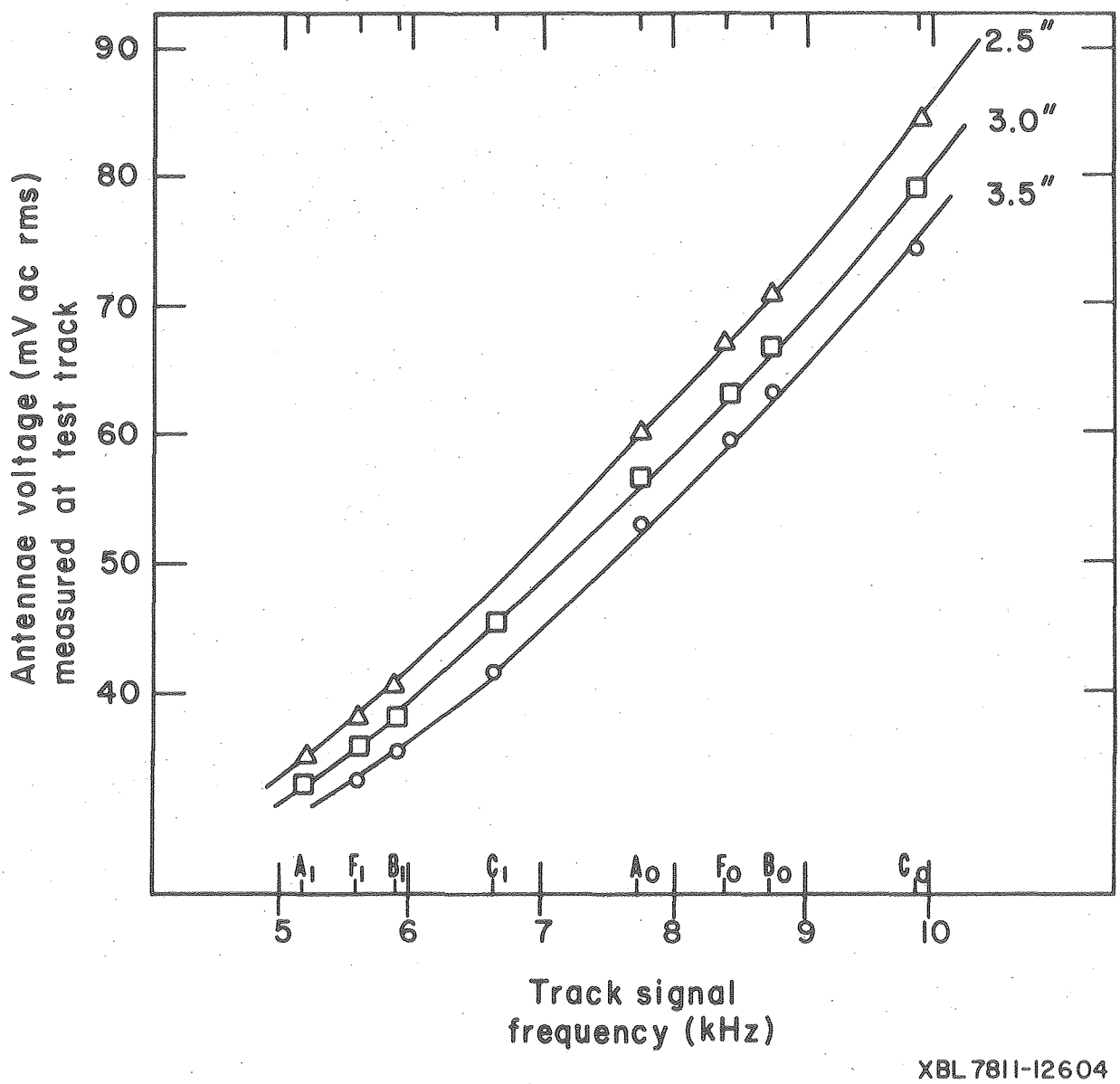

Figure 9. BART track signal antenna voltage vs. frequency and height at the test track (rail current = 200 mA).

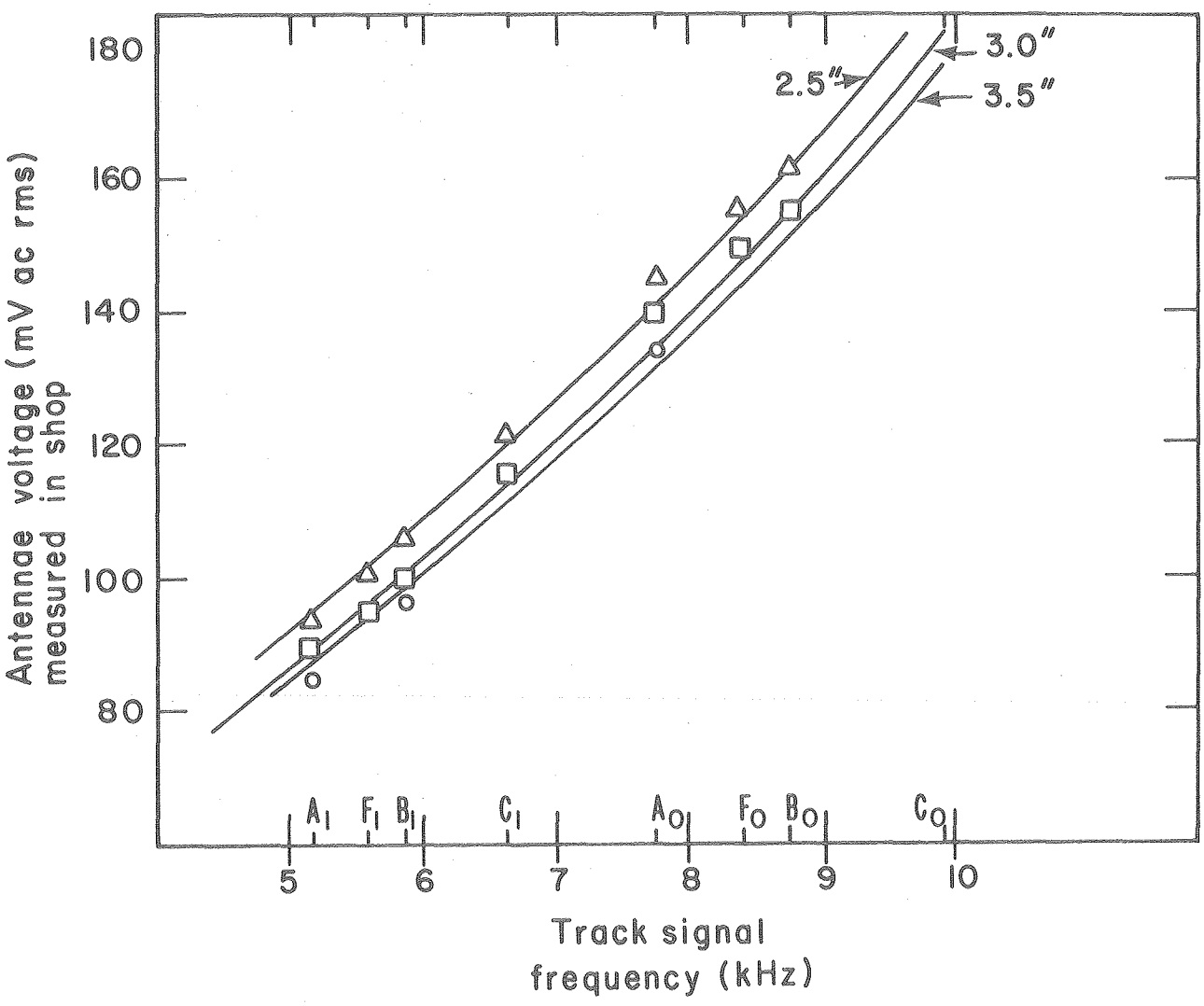

XBL 7811-12605

Figure 10. BART track signal antenna voltage vs. frequency and height in the barn (current in the TX ANT = 200 mA).

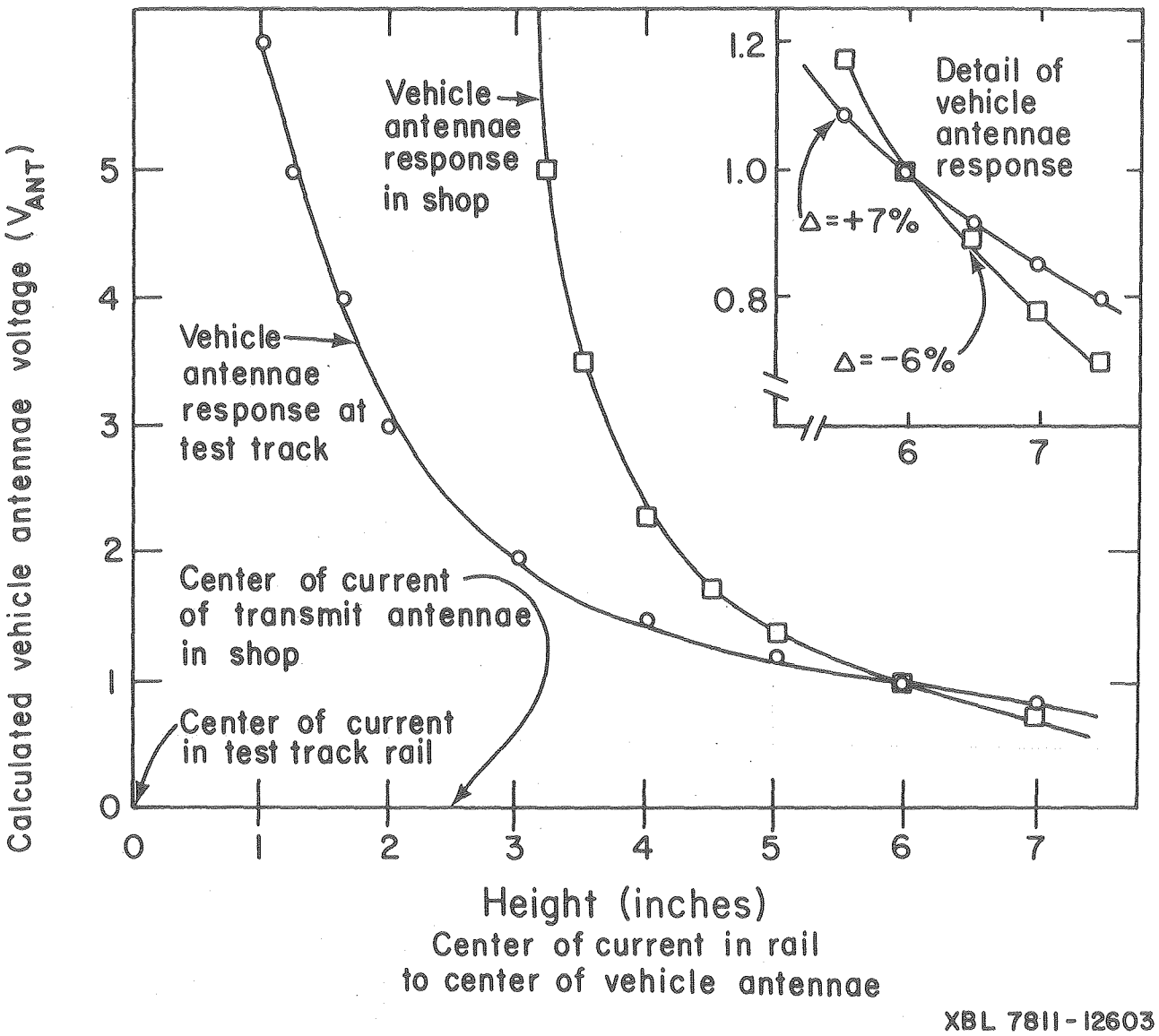

Figure 11. Vehicle antenna voltage vs. wheel height, test track vs. shop.

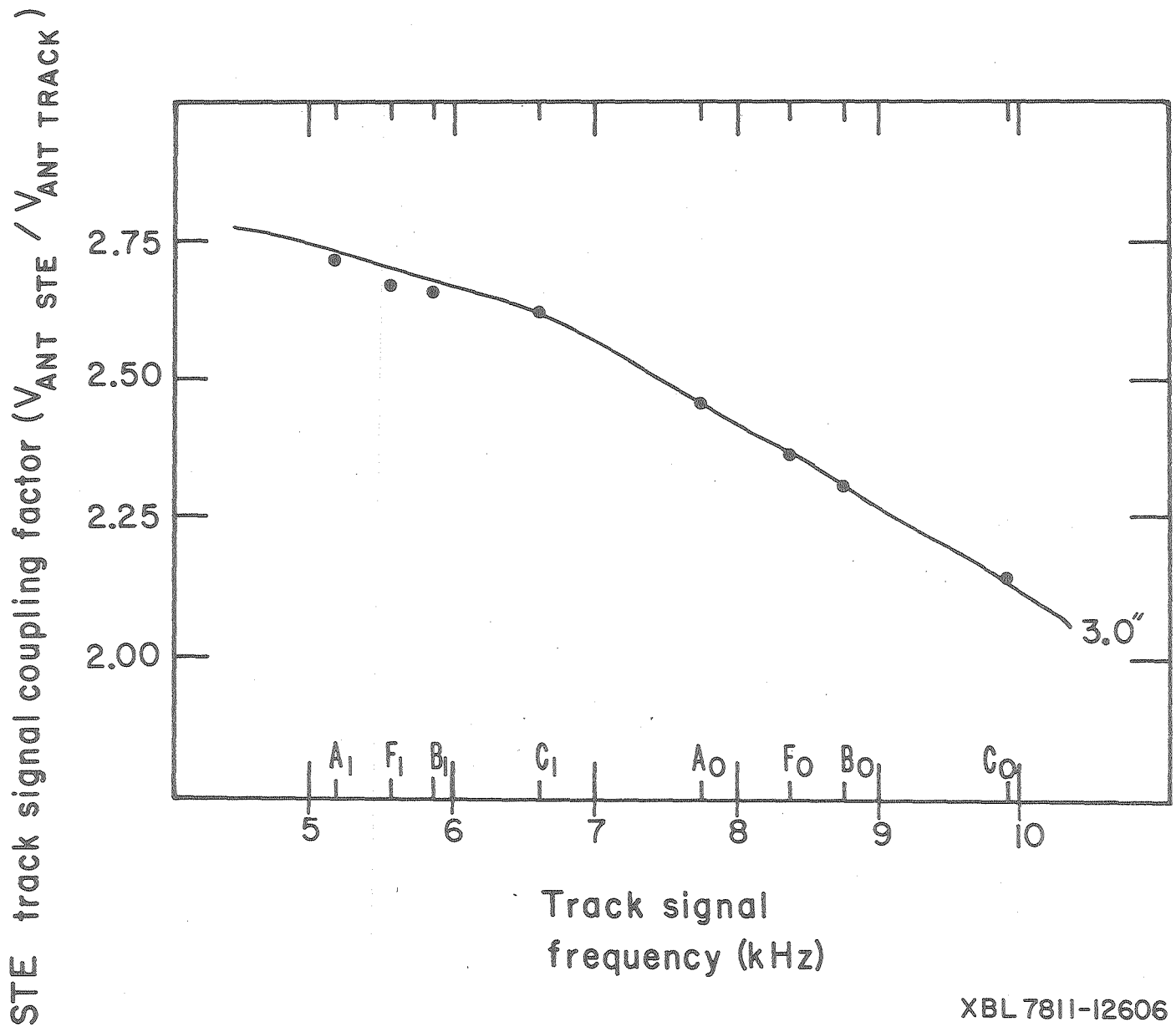

Figure 12. BART STE/track signal coupling.

This report was done with support from the Department of Energy. Any conclusions or opinions expressed in this report represent solely those of the author(s) and not necessarily those of The Regents of the University of California, the Lawrence Berkeley Laboratory or the Department of Energy.

TECHNICAL INFORMATION DEPARTMENT
LAWRENCE BERKELEY LABORATORY
UNIVERSITY OF CALIFORNIA
BERKELEY, CALIFORNIA 94720