Presented at the Particle Accelerator
Conference, San Francisco, CA
March 12-14, 1979

LBL-8359 c.2
Repl.

RECEIVED
LAWRENCE
BERKELEY LABORATORY
JUL 17 1981
LIBRARY AND
DOCUMENTS SECTION

LARGE APERTURE CONTACT IONIZED Cs^{+1} ION SOURCE FOR AN INDUCTION LINAC

Steven Abbott, Warren Chupp, Andris Faltens, William Herrmannsfeldt,
Egon Hoyer, Denis Keefe, Charles Hongchul Kim,
Stephen Rosenblum, and Joseph Shiloh

March 1979

Prepared for the U. S. Department of Energy
under Contract no. W-7405-ENG-48

TWO-WEEK LOAN COPY

This is a Library Circulating Copy
which may be borrowed for two weeks.
For a personal retention copy, call
Tech. Info. Division, Ext. 6782

LAWRENCE BERKELEY LABORATORY
UNIVERSITY OF CALIFORNIA

LBL-8359 c.2
Repl.

LARGE APERTURE CONTACT IONIZED Cs^{+1} ION SOURCE FOR AN INDUCTION LINAC*

Steven Abbott[+], Warren Chupp[+], Andris Faltens[+], William Herrmannsfeldt[++], Egon Hoyer[+], Denis Keefe[+], Charles Hongchul Kim[+], Stephen Rosenblum[+], and Joseph Shiloh[+]

Abstract

A 500 KeV one-ampere Cs^{+1} ion beam has been generated by contact ionization with a 30 cm dia. iridium hot plate. Reproducibility of space charge limited ion current wave forms at repetition rates up to 1 Hz has been verified. The beam is characterized to be very bright and suitable as an ion source for the induction linac based heavy ion fusion scheme. The hot anode plate was found to be reliable and self-cleaning during the operation.

Introduction

Among the leading accelerator driver technologies for heavy ion fusion, only the linear induction accelerator technology has the advantages of being a single-pass high repetition rate accelerator without requiring current amplification by storage rings at the end. One of the major problems in the application of the linear induction accelerator technology has been that of finding a suitable injector which could deliver of the order of a few hundred micro-coulombs of heavy ions within a normalized emittance of $\varepsilon_N = 2 \times 10^{-5}$ radian-meters for the one MJ reference design. A. Faltens and D. Keefe proposed to use the pulsed drift tube acceleration method for the injector.(1) An R/D program was initiated at LBL to develop a suitable ion source and to demonstrate the drift tube and induction linac technologies for heavy ions.(2) The purpose of the present paper is to describe the status of the R/D program.

A contact-ionization(3) ion source was chosen because; (1) it is in principle very bright (very dense in six dimensional phase space), (2) it has very low intrinsic background impurities (very high fractional ionization of >99%, singly ionized), (3) it is scalable up to a few hundred μC easily, and (4) it may in the future be applicable to uranium.(4)

A large aperture (30 cm dia.) Pierce geometry pulsed cesium contact-ionization source was constructed and operated at full design voltage of 0.5 MV single-gap and has delivered the full design current of more than 1 ampere. A three section pulsed drift-tube linac is being assembled which will accelerate the Cs^{+1} beam to 2-3.5 MeV depending on whether the drift-tube linac is operated in the uni-polar or in the bi-polar mode.

Experimental Apparatus

A schematic diagram of the experimental setup is shown in Fig. 1. Neutral Cs^{+1} atoms are sprayed onto the hot iridium plate (anode) of 30 cm dia. which is at a temperature of 1200° K - 1400° K. Most of the cesium atoms are adsorbed on the surface(3) as ions while some of them are emitted. The emission rate is dependent upon the fractional coverage of the anode with Cs atoms and on the temperature of the anode.(3) In space charge limited operation, where the Child-Langmuir current is smaller than the emission limit, the beam is uniform in the transverse direction, insensitive to the non-uniformities of the anode temperature and of the Cs coverage. High voltages up to 500 kV were applied to the anode by the Marx generator. The pulse length is variable, being determined by the firing of the crow bar spark-gap.

The source tank is pumped by a liquid helium cryopump and several diffusion pumps to 2×10^{-7} Torr. The partial pressure of Cs vapor was measured to be less than 10^{-8} Torr, with a residual gas analyzer. The partial pressure will be reduced further by using a pulsed Cs arc vapor source.

Each of the three drift tubes will have one, and eventually two Marx generators identical to the 500 kV anode Marx generator. The beam is focussed electrostatically with Pierce electrodes at the emitter and grids in the accelerating gaps. In normal operation the Cs surface coverage is determined by the pump uptake and the source suppy rates.

In normal operation the iridium plate and surrounding electrodes are self-cleaning. The equilibrium coverage of Cs on various electrodes and insulators is controlled by the local temperature, the supply rate of Cesium, and the pumping rate of Cs by various cold surfaces and pumps. With only the DP and turbo-molecular pumps working, the Cs leaves the system in the time scale of a day; with the cryopump and its LN and water baffles operating, the Cs leaves the system in less than one hour. With extreme over-supply of Cs the voltage hold-off capability of the system is lowered to approximately one-third of its peak value, and in such circumstances it is faster (1 day) to dismantle the system and wash it with water than to let it recover by itself.

Experimental Results

Typical voltage and current waveforms are shown in Fig. 2. The voltage was measured with a calibrated capacitive divider and the current was measured with a small shielded probe. Time of flight measurements showed that virtually all the beam was composed of singly ionized cesium ions (Fig. 3).

The total Cs^{+1} current was measured with a 15" dia. Faraday cup which had two highly transparent biased screens to suppress the effects of electrons in measuring the current. The first screen close to the iridium hot plate was biased at ground potential, while the second screen was biased at -600 volts to repel any electrons which may treavel with the beam. The collector was biased to +300 volts to retain the secondary electrons generated by the beam as it bombarded the collector. The currents measured in this way agree well with the Child-Langmuir current within our present experimental error of

*This work was supported by the Office of Inertial Fusion of the U.S. Department of Energy under contract No. W-7405-ENG-48.
+Lawrence Berkeley Laboratory, Berkeley, Calif. 94720
++SLAC, Palo Alto, Calif. 94305.

10% over a wide range of operating voltages up to the design voltage of 500 kV (Fig. 4). A pulsed Cs vapor source is required to supply enough Cs atoms to achieve space charge limited operation for voltages above 400 kV. A novel way of generating a pulsed cesium vapor source by vacuum spark has been tested and is being installed in the source chamber.

A radially scanning probe is used to measure the beam uniformity in the transverse direction. Our preliminary results show that the beam is approximately 90% uniform over the 30 cm beam diameter with less than 1 cm wide edges where the beam current drops rapidly to zero.

Potassium bromide (KBr) was found to be a suitable scintillating material for Cs^{+1}, emitting bright light which is visible with the naked eye even in the presence of the ambient light from the red-hot Ir plate. This technique is very useful in measuring the beam uniformity, and in giving an estimate of the beam emittance.

References

1. A. Faltens and D. Keefe, Proceedings of the Heavy Ion Fusion Workshop, Brookhaven National Laboratory, Upton, New York, October 17-21, 1977, BNL-Report 50769, p. 27.

2. W. Chupp, A. Faltens, W.B. Herrmannsfeldt, D. Keefe, S. Abbott, and E. Hoyer, ibid., p. 88.

3. J.B. Taylor, and I. Langmuir, Phys. Rev. 44, 423 (1933).

4. M. Hashmi and A.J. Van der Houven van Oordt, Conference on Isotope Separation, London, March 5-7 (1975).

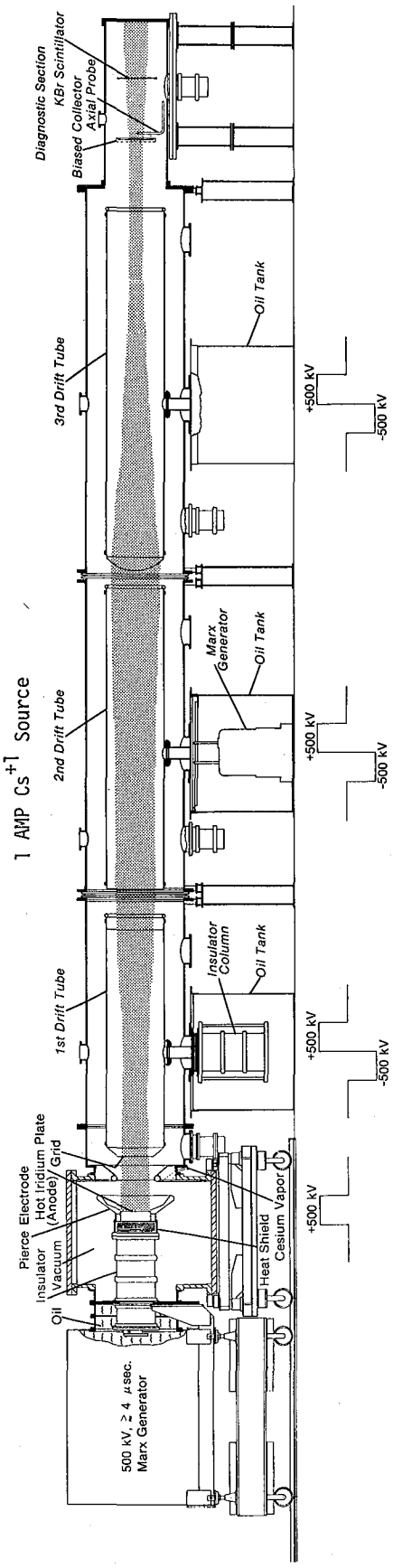

FIG. 1 - SCHEMATIC DIAGRAM OF THE EXPERIMENTAL APPARATUS.

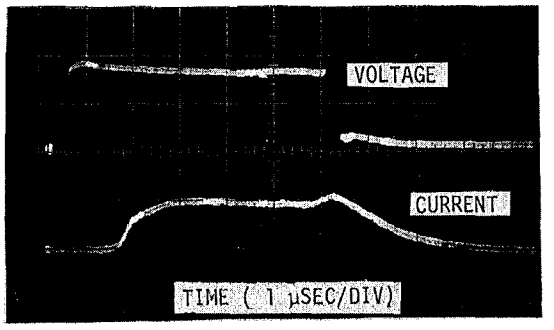

FIG. 2 - TYPICAL VOLTAGE AND CURRENT WAVE FORMS.

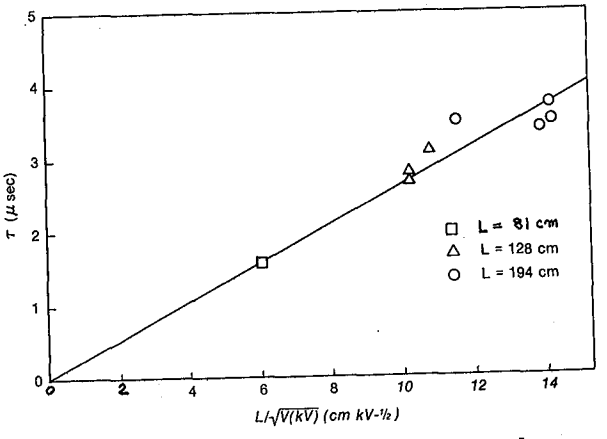

FIG. 3 - TIME OF FLIGHT MEASUREMENTS OF Cs^{1+} BEAM. L IS THE DISTANCE OF THE DRIFT SPACE.

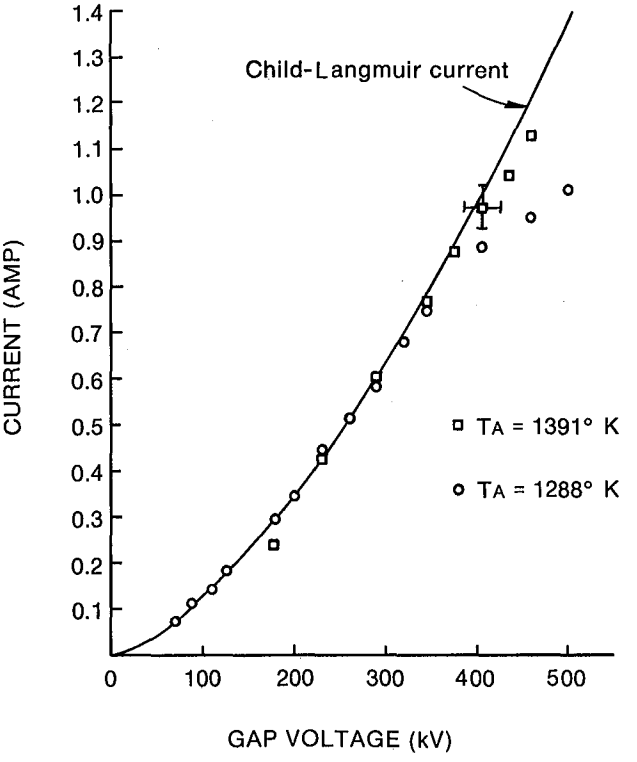

FIG. 4 - CURRENT VS. VOLTAGE APPLIED TO THE ANODE FOR TWO VALUES OF Cs EMISSION.