Presented at the Particle Accelerator
Conference, San Francisco, CA,
March 12-14, 1979

LBL-8373 c 2

MAGNETS IN THE PEP INJECTION LINES

Richard Reimers, Jack Peterson, Robert Avery, Klaus Halbach,
Massoud Kaviany, Addison Lake, Robert Main,
Rudy Nissen, and Jitendra Singh

March 1979

Prepared for the U. S. Department of Energy
under Contract W-7405-ENG-48

TWO-WEEK LOAN COPY

This is a Library Circulating Copy which may be borrowed for two weeks. For a personal retention copy, call Tech. Info. Division, Ext. 6782

LAWRENCE BERKELEY LABORATORY
UNIVERSITY OF CALIFORNIA
BERKELEY

RECEIVED
LAWRENCE
BERKELEY LABORATORY

MAY 4 1979

LIBRARY AND
DOCUMENTS SECTION

LBL-8373 c2

Lawrence Berkeley Laboratory Library
University of California, Berkeley

MAGNETS IN THE PEP INJECTION LINES*

Richard Reimers, Jack Peterson, Robert Avery, Klaus Halbach, Massoud Kaviany, Addison Lake, Robert Main, Rudy Minsen, Jitendra Singh**

Summary

The electron and positron beams from the Stanford two-mile linear accelerator are brought to the PEP storage ring via two beam-transport lines, each about 225 meters in length. The beam pulses intended for PEP are switched out of the SLAC beam line by a pair of pulsed dipole bend magnets, which deflects them downward into a d.c. dipole magnet, where positron beams are bent into the south line and electrons into the north. See Figure 1. Each line beyond this common d.c. magnet contains 10 principal dipole magnets and 24 d.c. quadrupole magnets. The common "beam-splitter" magnet and the last dipole in each line are iron-septum ("Lambertson"-type) magnets, in which regions of strong and weak magnetic field are separated by thin iron septa. The other magnets are of a more conventional design but have design features with cost or size advantages.

B. The Iron-Septum Magnets

The final magnet in each beam transport line (41B11 or 42B11) bends the injected beam by 42 milliradians vertically so that at the exit it is traveling parallel to the normal stored-beam center line and offset from it horizontally by about 5.5 cm. The geometry is illustrated in Figures 2A and 2B. The vacuum chamber of the storage ring nestles into a 100° notch in the flat pole of the magnet. Because the rectangular magnet is inclined at 21 milliradians, the notch position relative to the opposite pole varies vertically by 6.3 cm over the 3-meter length of the magnet. As a consequence the magnetic flux paths in the yokes are generally unbalanced and thus tend to force flux vertically across the 100° notch. To reduce this flux within the storage-ring vacuum chamber, a magnetic shunt which diverts this flux around the farside of the chamber was added. With the shunt added, the magnetic field in an asymmetrically located notch can be as much as 30 gauss at the position of the stored beam when the field in the main gap is 9.3 kilogauss (corresponding to 20 GeV injection beam energy). To reduce the field at the stored beam further, a 1-mm thickness of type 1010 soft steel will be added around the vacuum chamber of the stored beam with a minimum gap of 1 mm between this added shielding and the wall of the 100° notch. According to computations with the POISSON code, the stray field at the stored beam will be less than 0.5 gauss and the skew quadrupole component less than 0.2 gauss/cm.

To minimize the stray leakage fields at the end of the magnet, a magnetic cap (or "clamp") completely encloses the gap and coils at each end of the magnet. The 100° notch is, of course, carried through the end caps as well as the main body of the magnet.

The principal parameters of the B11 magnet shown in Figs. 2A, and 2B. are given in the following table:

Bend angle of injected beam	41.7 milliradians
BL product @ 15 GeV	20.9 kG-m
Effective length	3.022 meters
Magnetic field @ 15 GeV	6.92 Kilogauss
ΔB/B @ 1.4 cm from beam	.005
Current @ 15 GeV	508 Amperes
Magnet weight	3,120 kilograms

The beam-splitter magnet, 40B1 in Figure 1, is an iron-septum magnet because at this point the PEP beam center line is separated by only 4 cm from the center line of the beam to the SLAC switchyard. A strong field (9.3 kG at 20 GeV, for example) is required in the 2.8-cm main gap for bending the PEP beams whereas the average field at the SLAC beam, whose energy may be as low as 1 to 2 GeV, should be no more than 80 gauss in order to be compensated by existing nearby steering magnets. Because of the vacuum aperture needed for each beam line, only 12 mm was available for the thickness of the iron septum at the entrance end and 28.6 mm at the exit end. The magnet geometry is shown in Figure 3A. The SLAC beam passes through a 26-mm wide slot in the upper pole. A similar, dummy slot was made in the lower pole to maintain magnetic symmetry.

The magnetic design was done using the POISSON computer code. In order to keep the field in the SLAC-beam slot down to an acceptable value, the pole was widened at the entrance to a total width of 100 mm (62 mm was adequate to provide the required width of good field). In this case the average field along the length of the bare slot was about 100 gauss with 14 kilogauss in the main gap (corresponding to a PEP beam energy of 20 GeV). To reduce the field in the slot further the vacuum pipe for the SLAC beam was chosen to be a magnetic stainless steel, type 430, in order to obtain magnetic shielding without the potential vacuum hazard of outgassing of rusty soft iron.

Magnetic measurements were made using integral $\int Bdl$ measuring coils. The field reversal in the SLAC-beam slot at low excitation shown in Figure 3B is due partly to the residual field in the stainless steel shield and partly to the additional soft-iron shielding assembly used over about 15 cm of the SLAC beam pipe at each end of the magnet; this end-effect shielding forces the leakage flux at each end into a complicated corkscrew path whose average over this section of the SLAC beam line is in the reverse direction.

The principal parameters of the B1 magnet are given in the following table:

Bend angle of injected beam	65.6 milliradians
BL product @ 15 GeV	32.8 kG-m
Effective length	3.098 meters
Magnetic field @ 15 GeV	10.59 kilogauss
ΔB/B @ 2 cm from beam	.003
Current @ 15 GeV	749 Amperes
Magnet weight	8,000 kilograms

C. The Other Bend Magnets

The 7 magnets B3 through B9 in each line (Figure 1) are identical H-magnets. The design is

*This work was supported by the Office of High Energy and Nuclear Physics of the U.S. Department of Energy under contract No. W-7405-ENG-48.
**Lawrence Berkeley Laboratory, Berkeley, Calif. 94720

shown in Figures 4A and 4B, and the principal parameters in the following table. The unusual feature of this magnet is the curved pole piece within straight coils and yoke pieces. The curvature was advantageous because otherwise the sagitta requirements would have almost doubled the pole and yoke thicknesses.

Bend angle	131.2 milliradians
BL product @ 15 GeV	65.6 kG-m
Effective length	5.274 meters
Magnetic field @ 15 GeV	12.4 kilogauss
$\Delta B/B$ @ 2.5 cm from beam	.003
Current @ 15 GeV	806 Amps.
Magnet weight	5590 kg

The magnetic efficiency is about 97% at 15 GeV beam energy but drops to 82% at 20 GeV, as designed.

The two B2-type magnets (Figure 5) make up an extension of the B1 beam-splitter magnet. These magnets are C-shaped because there was room for the return yokes only on the outer side in each case, as shown in Figure 5A. The coils are all below the gap because of the room needed for the SLAC beam line above the gap. Because of the large stray field between the two B2 magnets, the SLAC beam line was shielded by a vacuum pipe made of type 430 magnetic stainless steel. With 16 kilogauss in the B2 magnet gaps (20 GeV beam energy) the resultant stray $\int Bdl$ along the SLAC line is measured to be less than 25 gauss meters. The principal parameters of the magnet are given in the following table:

Bend angle	65.6 milliradians
BL product @ 15 GeV	32.8 kG-m
Magnetic field @ 15 GeV	12.5 kilogauss
Effective length	2.625 meters
$\Delta B/B$ @ 2.4 cm from beam	.003
Current @ 15 GeV	809 Amperes
Magnet weight	3031 kilograms

D. The D.C. Quadrupoles

The design of the d.c. quadrupoles is shown in Figure 6A. Because of the beam-transport lines' relatively high tolerance of magnetic distortions,[2] stair-step approximations to hyperbolic pole shapes and relatively loose manufacturing tolerances were adopted, with resulting cost benefits.

The principal parameters of the quadrupole for 15 GeV operation are given in the table below. A typical measured magnetic multipole spectrum is shown in Figure 6B and the corresponding iso-magnetic-error contours (relative to the quadrupole field) are shown in Figure 6C

Gradient-length (B'L)	83.24 kilogauss
Field quality ($\Delta B/B_Q$)	$\leq$ .01 at 24 mm
Field gradient B'	153.5 kilogauss/meter
Pole tip field	3.84 kilogauss
Aperture, full width	50 mm
Effective length	542 mm
Weight	280 kg

References

1. K.L. Brown, R.T. Avery, and J.M. Peterson, The PEP Injection System, Proc. of 1975 Particle Accelerator Conference, IEEE Transactions on Nuclear Science, NS-22-3, p. 1821.

2. LBL-8365, The Sensitivity of the PEP Beam-Transport Line to Perturbations, J.M. Peterson, and K.L. Brown, Paper F-13 of this conference.

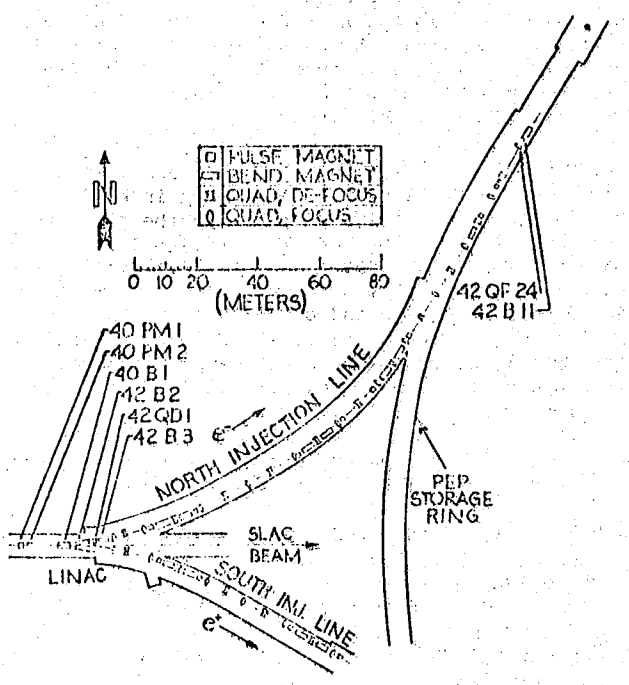

Fig. 1. PEP Injection Lines.

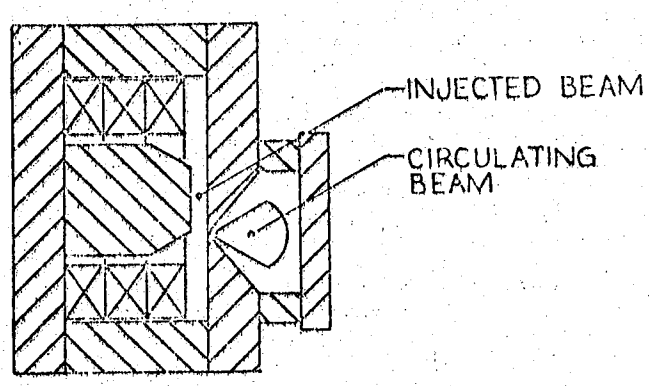

Fig. 2A. B11 Entrance Cross-Section with Shunt

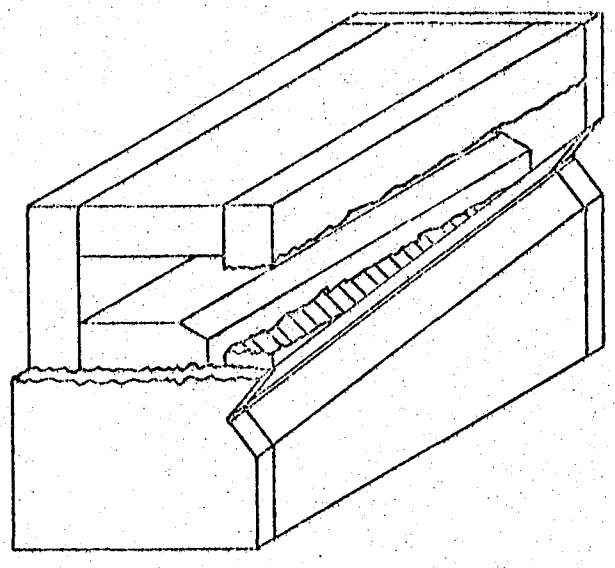

Fig. 2B - B11 Isometric Without Shunt

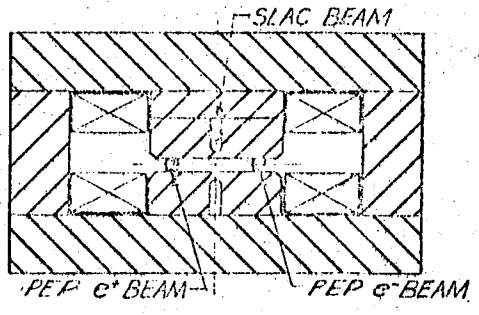

Fig. 3A - B1 Exit Cross Section

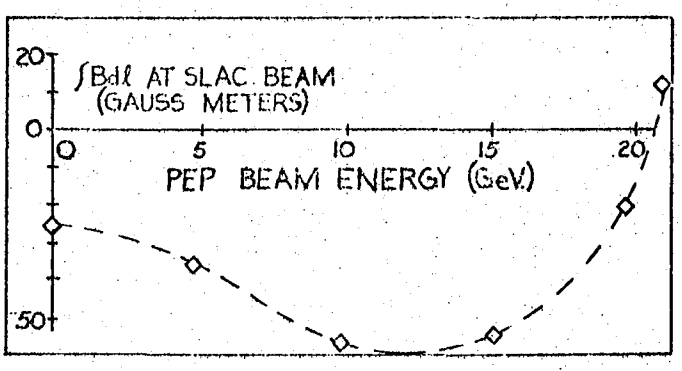

Fig. 3B - B1 Magnet Excitation in SLAC - Beam Slot

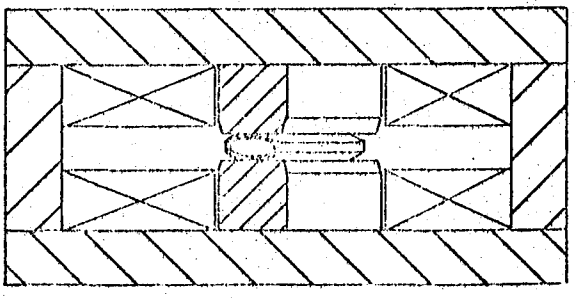

Fig. 4A - B3 Cross Section at Center of Magnet

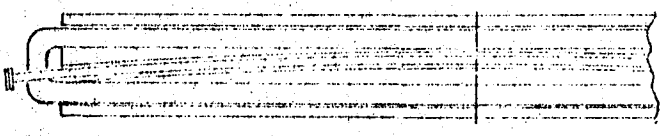

Fig. 4B - B3 Plan View Without Upper Yoke

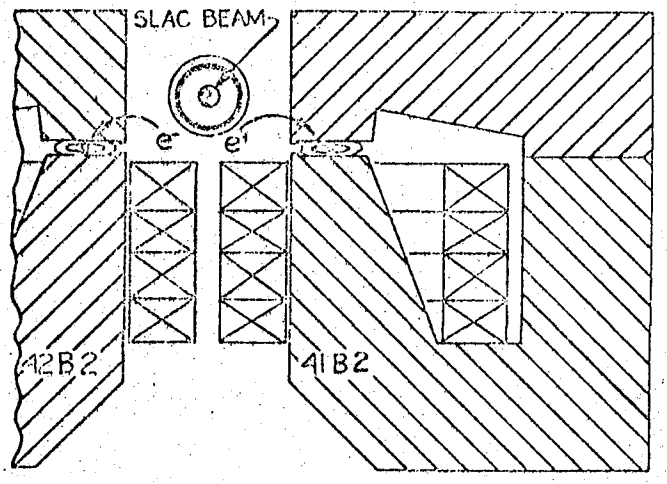

Fig. 5 - B2 Cross Section

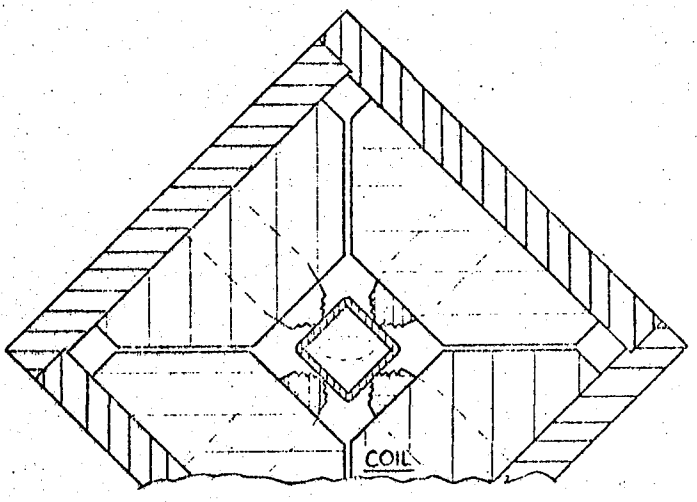

Fig. 6A - Quadrupole Cross Section

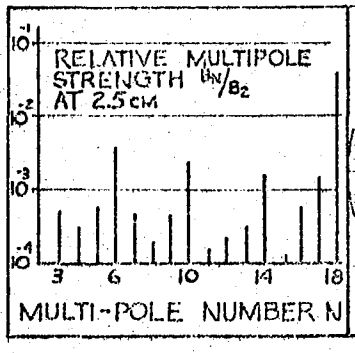

Fig. 6B - Quad. Multipole Spectrum

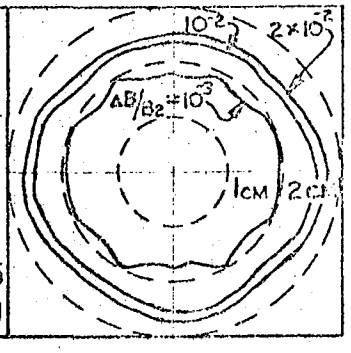

Fig. 6C - Quad. Iso. - ΔB/B Contours

This report was done with support from the Department of Energy. Any conclusions or opinions expressed in this report represent solely those of the author(s) and not necessarily those of The Regents of the University of California, the Lawrence Berkeley Laboratory or the Department of Energy.

Reference to a company or product name does not imply approval or recommendation of the product by the University of California or the U.S. Department of Energy to the exclusion of others that may be suitable.

TECHNICAL INFORMATION DEPARTMENT
LAWRENCE BERKELEY LABORATORY
UNIVERSITY OF CALIFORNIA
BERKELEY, CALIFORNIA 94720