Presented at the Particle Accelerator
Conference, San Francisco, CA,
March 12-14, 1979

LBL-8414 c.2

HARDWARE IMPLEMENTATION AND TEST RESULTS OF PEP CHOPPER MAGNET POWER SUPPLY SYSTEM

Leslie T. Jackson and William S. Flood

RECEIVED
LAWRENCE
BERKELEY LABORATORY

MAY 18 1979

LIBRARY AND
DOCUMENTS SECTION

March 1979

Prepared for the U. S. Department of Energy
under Contract W-7405-ENG-48

TWO-WEEK LOAN COPY

This is a Library Circulating Copy
which may be borrowed for two weeks.
For a personal retention copy, call
Tech. Info. Division, Ext. 6782

LBL-8414 c.2

Lawrence Berkeley Laboratory Library
University of California, Berkeley

HARDWARE IMPLEMENTATION AND TEST RESULTS OF PEP CHOPPER MAGNET POWER SUPPLY SYSTEM*

Leslie T. Jackson and William S. Flood**

Introduction

Because of the limited space available, this paper is being written with little introductory material, or discussion of the overall PEP Magnet Power Supply System that was covered in the previous Accelerator Conference paper.(1) Rather emphasis is placed on the hardware that has been produced and any changes that have occurred in the major technical components. At the time of the conference all of the Injection and Beam transport system is installed and beam has been run down the South Injection tunnel two-thirds of the way to the ring. The chopper system for powering the Ring Bend, Quadrupole, and Sextupole circuits is prepared for installation when the region 8 surface building is available for occupancy in early April, 1979. The last major system, the bipolar Trim and Steering supply system is partially completed and orders for the remainder are now being placed for delivery in June, 1979. The following sections will describe each of the systems in more detail.

Chopper System

The chopper system powers 19 separately current-regulated 400 amp-maximum magnet circuits and one 1400 amp-maximum bend magnet circuit. Of the 19 circuits there are 9 quadrupole, 9 sextupole, and one Wiggler families of magnets. All the circuits feed strings of magnets distributed around the ring from the main power supply location at Region 8. Five of the 400A circuits with high numbers of magnets around the ring require two choppers in series at Region 8, and the bend circuit "has supplies at Region 12 and 4 in addition to the two choppers at Region 8. All the choppers at Region 8 are fed from two 2 MW-maximum DC supplies which will be discussed in the next section.

The 400A and 1400A choppers are designed and constructed to be as similar as possible. The circuit configuration used is shown in Figure 2, with the design equations listed below.(3) The two types of choppers are mounted on similar sized aluminum channels. They differ in the values of inductance and capacitance used, and in that the 1400A unit has a second thyristor which is alternately fired with the first. The 400A chopper is shown in Figure 2 and the 1400A unit is shown in Figure 3 mounted in its rack next to one of the 2MW supplies. The racks for mounting the 400A choppers are functionally identical with those of 1400A units and contain all the utilities necessary for operation. These utilities include the input and output terminals and DC connections to the chopper channel, input current-limiting fuse, quick-disconnect cooling-water circuitry, air-circulating blowers for cooling the commutating capacitors, current-monitoring transductors and differential current-detector, firing pulse cables from the remote controller, and protective interlocks and indicators. The transductor and differential-current power supplied reside in a chassis at the bottom of the rack (not shown in Figure 3). The firing pulses are also routed through this chassis on BNC tee's (for monitoring), the cables having come from the remote CAMAC crate where all the chopper controllers are located. The coaxial, firing pulse system terminates in 50 ohms at the pulse transformers located on the chopper channel.

Substantial audio-noise reduction is obtained by employing panels made of ceramic ceiling-tile backed by 5/8" sheet-rock right adjacent to the chopper channel to enclose it in the rack. The top and the end panels are immediately removable to allow quick access to the chopper channel for testing or replacement. The 15db reduction of the predominantly 6 kHz noise obtained by this technique reduces the ambient level right outside the rack to 62db. The substantial volume of space still remaining in the racks allows for the possible future addition of an output filter on the choppers. Filtering is not necessary to achieve the desired 100 ppm-or-less magnetic field ripple with the choppers running at 2 kHz, but there could possibly be problems of noise coupling into adjacent control-and-monitoring circuits from the water-cooled cable runs around the ring.

Extensive testing of the choppers has been done in a 1MW test facility located at the Bevatron at LBL. This facility also provided the means for testing the three-phase full-wave-bridge thyristor-controller used as the 0 to 600 volt DC supply for the chopper family. All the choppers have been run at rated load for at least an hour at this facility. A 1400A and a 400A chopper were also run simultaneously from the common DC supply to check for possible interactive effects. The controller boards for both units were mounted adjacent to each other in a CAMAC crate as they will be in the final installation. No problems were encountered in these tests.

Previous developmental work at this test facility led to the adoption of the current-commutated chopper circuit shown in Figure 1. The first type of circuit tested was described in the last paper(1) and employed voltage commutation. In this type of circuit a voltage of the order of the supply voltage is applied across the turned-on chopper thyristor at the time commutation is to commence. The commutation worked well, but voltage transients caused by the rate-of-change-of-current through unclamped stray inductance at the end of commutation caused commutation thyristor failures and seemed difficult to correct. This circuit, which worked well at a 300V supply level using 900V thyristors, proved difficult to upgrade to 600V operation with 1200V thyristors. Operation with thyristors rated above the 1200V level is undesirable because the turn-off time of the thyristor starts to climb beyond the 15 μs provided by the Westcode R220 units employed throughout the choppers.

The current-commutated circuit doesn't have the possibility of inductive voltage buildup on the commutating thyristor because by the nature of the circuit it is not in the current path at the time just before the load current commutates from the source-commutator circuit to the free-wheeling-diode circuit. However the voltage on the commutating

*This work was supported by the Office of High Energy and Nuclear Physics of the U.S. Department of Energy under contract No. W-7405-ENG-48.
**Lawrence Berkeley Laboratory, Berkeley, Calif. 94720.

capacitor does rise to a peak value above the supply voltage at this time as a function of inductance in the circuit, and this capacitor voltage is impressed across the commutating thyristor. So a satisfactory balance must be struck between this peak voltage, and the minimum allowable inductance in series with the DC supply as determined by the di/dt capabilities of the chopper thyristor. The current-commutated circuit behaves as described in the Dewan textbook,[2] with the exception that the inductance in series with the DC supply is not included in the expressions. Until recently the current-commutated circuit has not been as widely used as the voltage-commutated type because of the 50% increase incurred in the turn-off time. Recent advances in thyristor design have substantially reduced this time (with the Westcode R220 the increase is only 12%).

The commutator LC circuit is designed such that the peak ringing current is approximately twice the rated DC output current of the chopper. Choosing 22 μs as the Ipeak/2 time results in a 33 μs half-cycle time and a 15 kHz commutating frequency. Using 22 μs turn-off time on a 15 μs device provides the internal overcurrent sensor the means to commutate-off a fast-rising fault-current. All the commutating capacitors are of 5 μF value; the 400A chopper using 3 of them and the 1400A using ten. The rms current in each capacitor is approximately 120A.

The complete controller for a chopper is built on one CAMAC card (Figure 4). This card receives its reference signal as a 16 bit word, differentially buffers the transductor feedback signal, amplifies the error signal and converts it to 24 volt firing pulse via a ramp generator, comparator, and pulse amplifier. There are eight cards per crate and four crates for the system. The whole system operates from phased-clocks which are phased-locked to a multiple of the 60 Hz line frequency in the vicinity of 2 kHz. The system can also be operated from an internal, variable-frequency oscillator to allow searching for possible loaded-transmission-line resonances in the magnet circuits, and then choosing an appropriate line-synchronized frequency. Phased-clock pulses are availabe from the system clock at 30° intervals, in order that the firing setup of all the choppers being fed from a given DC supply can be chosen to minimize the current ripple in the capacitor bank on the output of the DC supply.

D.C. Supply System

A 2 MW DC supply is shown in Figures 3 from the back side. As noted before the 1400A chopper is also shown in the adjacent rack because the racks will be shipped to the PEP construction site in this fashion. This group of 30" deep racks, plus an identical set but of the reverse output polarity, comprise the DC supply system for all the choppers. They are located in three rows of 8 racks each. Two of the rows are located on one side of the DC supplies row, and the other on the opposite side. The 400A choppers are each fed from the DC supplies via separate quadraflex cables composed of four 4/0's with a ground return in the center, which originate from along the busses at the top of the back of the P.S. rack. These separate feeds are necessary to prevent interaction between the various units and to minimize the feed inductance. The cable trays are routed to the various choppers such that the length of feed-cable is the same in all cases and each inductance is approximately 2.5 μh. Because of the lower inductance required to feed the 1400 A choppers of 0.75 μh, a parallel plane bus with 1/4" insulation separating the busses comes directly from the D.C. supply bus structure, and the multiple 4/0's connecting the terminals to the channel are tightly bundled. The choke for the LC filter is at the bottom of the rack.

The capacitor bank on the output of the power supply is also designed to minimize the output inductance. Separate, equilength quadraflex cables go from the bus structure at the top through fuses to each of the 14 capacitor banks. The leads are connected with quick-disconnect Multilam connectors, and each bank of eight capacitors is then removable by undoing a couple of wing-nuts. There are four pairs of series 3,100 μF, 450V capacitors to each bank for a nominal 50A rating, making a total of 87,000 μF and 700A. Each bank is fused with indication at 120A. The fuses are intended to provide disconnection if a capacitor in any bank shorts, where the total current is monitored by a current transformer which provides a warning and trip-level indication. A failed-fuse counter determines the allowable level for the total rms current in the capacitor-bank. The sum of these capacitor's fusing energy is half the clearing energy of the 1600A fuse in the big chopper, so that the chopper fuse will always go first in the event of a load-side chopper fault. The 700A rating is just above the ripple current if the Bend Chopper is operating alone at half-voltage.

The 6-pulse thyristor controller is mounted on the front of the power supply. This 2MW unit was purchased from Research, Incorporated at a cost of $3/KW, and provides a voltage-controlled output and fast-turnoff for detected over-current in any of the three-phase 480V lines. A pneumatically actuated shorting-bar can only be applied when the circuit breaker is tripped and all voltages at Regions 8, 12, and 4 are detected at zero volts. The bar shorts the DC output voltage, the 3 phase 480V input, and the output terminal of the 1400A chopper. The chopper output is included in this set to prevent any possibility of voltage from the Bend Supplies at regions 12 or 4 appearing at region 8 while the power supply is open.

Trim and Steering System

The DC supply is a bipolar, 40 volt, 1000A unit used to provide power for the 24 transistor actuators located above the supply in the double rack. There are nine of these power supplies for PEP: one in each of the Instrumentation and control racks at each region, and one each Regions 8 and 10 and sector 30 to provide for various Injection system requirements. The supplies are 24 inches high and utilize a 480/34V three phase transformer with a star secondary. The rectifier assembly at the left of the rack is fed from the transformer with 4/0's. The diodes are single-sided water-cooled with thin, large area, copper busses on the otherside. The buses make up to water-cooled 25 μh chokes, which in turn connect to the output vertical-bus-structure which runs-ups the center of the wireway in the middle of the rack. The output filter capacitors connects directly to the busses via short leads to minimize the inductance. With this f_o = 90 hz filter a modest reduction of approx. 1/10 is obtained for 360 hz ripple components, but far more importantly the commutation spikes are substantially reduced. The switchgear is located in a box in front of the transformer and the ON/OFF chassis and meter chassis are located at shoulder level in the racks. Each actuator is fed from the DC busses

through current limiting fuses of appropriate size to protect the particular magnet load on each actuator. The primary protection is in the overcurrent circuit of the actuator which has a choice of three settings.

The actuator chassis is shown in Figure 5 from the top. There will be 184 of these units initially installed in PEP. The nominal rating is ± 37 V at 60A, but it is being used for 105A applications. The determining application criteria is that the dissipation in the actuator in either polarity output cannot exceed 800 watts. The multilam connectors are all rated nominally for 90 amps, and the 50 watt shunt resistor must be changed to a lower value of resistance for applications over 60A.

The amplifier and control card on the right contains: (1) the buffering, amplification, and compensation necessary for the 100 ppm current loop and 40V output level, (2) status sensing for overcurrent, overpower, and glitch detection, (3) status output both digital and visual. The heat sinks on the left for the PNP and NPN transistors, emitter resistors, and shunt are water cooled and covered on the top with a printed-circuit board which provides the emitter bus on one side, the base circuitry on the other, and pin mounting sockets for the transistors which are installed from the bottom. The transistors are fastened to the copper heat-sink through "pem" nuts installed in the copper. Soldering the output-connection braid to the p.c. board emitter gives ample surface area for 60-80A operation, but should be doubled for higher currents.

Bibliography

1. Jackson, L. T., "PEP Magnet Power Supply Systems", IEEE Trans. Nucl. Sci., NS-24 (3), pp 1245- 1247, 1977

2. Dewan, S. B., and Straughen, A., "Power Semiconductor Circuits, Wiley and Sons, N. Y., 1975, pp. 318-334.

3. Flood, W. S., Unpublished communication, 1978

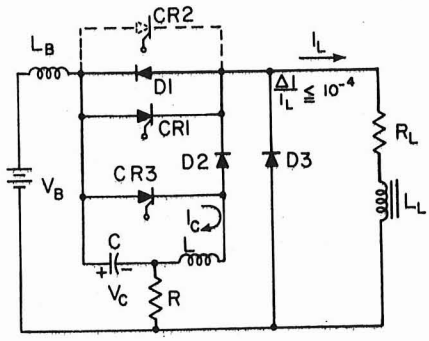

(1) $K_c \geq \frac{\Delta R(T)}{R_L} \Big/ \frac{\Delta I}{I_L}$

(2) $f \geq \frac{3}{2}\frac{K_o}{2\pi L_L/R_L} \sim \frac{K_o}{4L_L/R_L}$

(3) $V_B = \sqrt{2}\, 480 \sim 600V$

(4) $\frac{V_B}{L_B} \leq \frac{dI}{dt}$

(5) $\frac{(V_B - \bar{V}_C)^2}{R} = \frac{1}{2} L_B \bar{I}_L^2 f$

(6) $\Delta V_C = \frac{(V_C - V_B)}{RCf}$

(7) $V_C < V_{RRM}$

(8) $\frac{V_C}{\sqrt{L/C}} \geq 2 I_L$

(9) $\frac{2}{3}\pi\sqrt{LC} \geq t_q$

(10) $\frac{dI_C}{dt} = \frac{V_C}{L} \leq \dot{I}_{SPEC.}$

XBL 785-289

Fig. 1 Current-Commutated Chopper Circuit

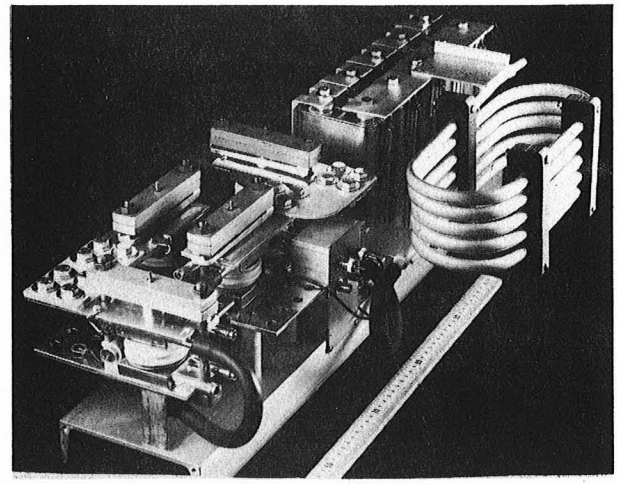

Fig. 2 400 amp Chopper Module

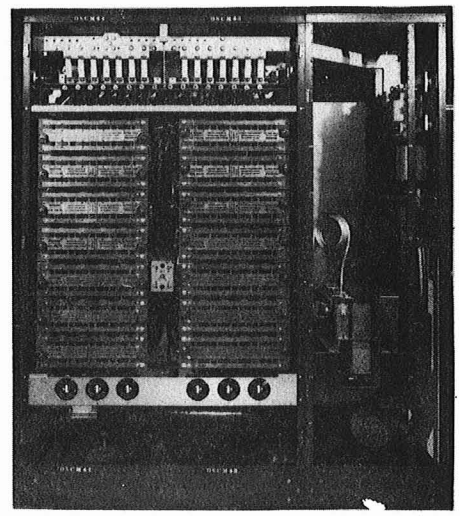

Fig. 3 1400 amp Chopper and 2MW DC Power Supply

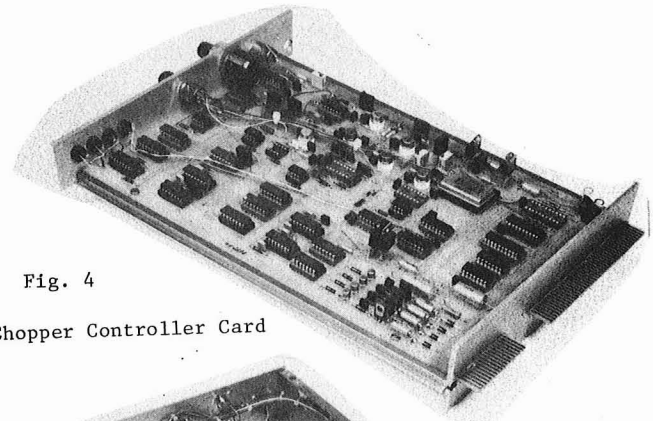

Fig. 4

Chopper Controller Card

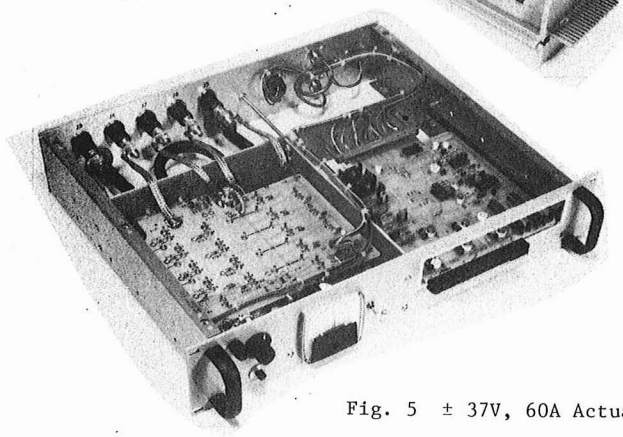

Fig. 5 ± 37V, 60A Actuator

This report was done with support from the Department of Energy. Any conclusions or opinions expressed in this report represent solely those of the author(s) and not necessarily those of The Regents of the University of California, the Lawrence Berkeley Laboratory or the Department of Energy.

Reference to a company or product name does not imply approval or recommendation of the product by the University of California or the U.S. Department of Energy to the exclusion of others that may be suitable.

TECHNICAL INFORMATION DEPARTMENT
LAWRENCE BERKELEY LABORATORY
UNIVERSITY OF CALIFORNIA
BERKELEY, CALIFORNIA 94720