FINAL REPORT
GEOTHERMAL SUBSIDENCE RESEARCH

DR. 959

LBL-8616
GSRMP-2
UC-37

INSTRUMENTS FOR SUBSURFACE MONITORING OF GEOTHERMAL SUBSIDENCE

MASTER

J. E. O'Rourke and B. B. Ranson

Woodward-Clyde Consultants

Geothermal Subsidence Research Management Program

July 1979

Earth Sciences Division
Lawrence Berkeley Laboratory
University of California

DISTRIBUTION OF THIS DOCUMENT IS UNLIMITED

Prepared for the U.S. Department of Energy under Contract W-7405-ENG-48

LEGAL NOTICE

This book was prepared as an account of work sponsored by an agency of the United States Government. Neither the United States Government nor any agency thereof, nor any of their employees, makes any warranty, express or implied, or assumes any legal liability or responsibility for the accuracy, completeness, or usefulness of any information, apparatus, product, or process disclosed, or represents that its use would not infringe privately owned rights. Reference herein to any specific commercial product, process, or service by trade name, trademark, manufacturer, or otherwise, does not necessarily constitute or imply its endorsement, recommendation, or favoring by the United States Government or any agency thereof. The views and opinions of authors expressed herein do not necessarily state or reflect those of the United States Government or any agency thereof.

Printed in the United States of America
Available from
National Technical Information Service
U.S. Department of Commerce
5285 Port Royal Road
Springfield, VA 22161
Price Code: A07

DISCLAIMER

This report was prepared as an account of work sponsored by an agency of the United States Government. Neither the United States Government nor any agency Thereof, nor any of their employees, makes any warranty, express or implied, or assumes any legal liability or responsibility for the accuracy, completeness, or usefulness of any information, apparatus, product, or process disclosed, or represents that its use would not infringe privately owned rights. Reference herein to any specific commercial product, process, or service by trade name, trademark, manufacturer, or otherwise does not necessarily constitute or imply its endorsement, recommendation, or favoring by the United States Government or any agency thereof. The views and opinions of authors expressed herein do not necessarily state or reflect those of the United States Government or any agency thereof.

DISCLAIMER

Portions of this document may be illegible in electronic image products. Images are produced from the best available original document.

Final Report

INSTRUMENTS FOR SUBSURFACE MONITORING OF GEOTHERMAL SUBSIDENCE

Prepared for

Lawrence Berkeley Laboratory
University of California
Berkeley, California 94720
under P. O. 2663402

By

J. E. O'Rourke
and B. B. Ranson
Woodward-Clyde Consultants
Three Embarcadero Center
San Francisco, California

DISCLAIMER

This book was prepared as an account of work sponsored by an agency of the United States Government. Neither the United States Government nor any agency thereof, nor any of their employees, makes any warranty, express or implied, or assumes any legal liability or responsibility for the accuracy, completeness, or usefulness of any information, apparatus, product, or process disclosed, or represents that its use would not infringe privately owned rights. Reference herein to any specific commercial product, process, or service by trade name, trademark, manufacturer, or otherwise, does not necessarily constitute or imply its endorsement, recommendation, or favoring by the United States Government or any agency thereof. The views and opinions of authors expressed herein do not necessarily state or reflect those of the United States Government or any agency thereof.

July, 1979

DISTRIBUTION OF THIS DOCUMENT IS UNLIMITED

Geothermal Subsidence Research
Category 3, Project 1

Woodward-Clyde Consultants

Reference to specific brands, equipment, or trade names in this report is made to facilitate understanding and does not imply endorsement by Lawrence Berkeley Laboratory.

The views and conclusions contained in this document are those of the authors and should not be interpreted as necessarily representing the official policies or recommendations of the Department of Energy or of the U.S. Government.

ACKNOWLEDGMENTS

This report was prepared by Woodward-Clyde Consultants, Western Region, San Francisco, under Lawrence Berkeley Laboratories (LBL) Purchase Order No. 2663702 and includes results of research done between August 1977 and July, 1979. The subject research is pursuant to the LBL contract with the U. S. Department of Energy, Division of Geothermal Energy, for Geothermal Subsidence Research. It was administered under the technical direction of Messrs. Terry Simkin, John Noble and Dr. Werner Schwarz of LBL. Mr. H. A. Todd was the contract administrator for LBL.

The authors wish to acknowledge the program direction and constructive review of this study by Dr. Ulrich Luscher, Woodward-Clyde Consultants' Principal-in-Charge for this project. We also wish to thank Ms. Mary Gillam, Mr. Robert L. Ray, Mr. Edward Fischer and Dr. Jerome Singer for their technical assistance and review in their respective disciplines: geothermal subsidence processes, metallurgy, insulation and refrigeration, and electrical engineering. We are also grateful to Dr. R. L. McNeill and Mr. J. H. Wilson for their reviews.

This report and the four preceding interim reports greatly benefited from the yeoman assistance of Bayani DeLeon and Dante Tolosa, draftsmen and Anita Davy, Jackie Georges, Rodger Pitcairn and Lisa Rigler, technical typists.

This work was supported by the U. S. Department of Energy under Contract No. W-7405-ENG-48.

TABLE OF CONTENTS

		Page
	ACKNOWLEDGEMENTS	i
	LIST OF TABLES	iii
	LIST OF FIGURES	iv
	SUMMARY	v
1.0	INTRODUCTION	1
	1.1 Overview	1
	1.2 Organization of the Study	1
	1.3 Introduction to Subsurface Monitoring Systems	2
2.0	INSTRUMENT DEVELOPMENT	5
	2.1 Review of Available Instruments	5
	2.2 Methods for Improving Existing Instruments	7
	2.3 Sensor and Signal Technology	9
	2.4 Adaption of Producing Wells to Instrumentation Needs	10
	2.5 New Concepts in Subsidence Instrumentation	11
3.0	RECOMMENDED SUBSIDENCE MEASUREMENT INSTRUMENTS	58
	3.1 Comparative Rating of Existing, Improved and New Instruments	58
	3.2 Review of Selected Extensometer Systems	59
4.0	RESEARCH PRIORITIES	72
	4.1 Proprietary Information	72
	4.2 Potential Researchers	73
	4.3 Structure of Future Research	74
	4.4 Anticipated Costs and Time for Instrument Development	75
5.0	REFERENCES	80
	APPENDIX A	

LIST OF TABLES

		Page
TABLE 2.1	- COMPARISON OF GEOTHERMAL SUBSIDENCE AREAS	13
TABLE 2.2	- COMPARISON OF GROUNDWATER SUBSIDENCE AREAS	14
TABLE 2.3	- COMPARISON OF MAJOR OIL AND GAS SUBSIDENCE AREAS	15
TABLE 2.4	- REPRESENTATIVE GEOTHERMAL RESERVOIR TEMPERATURES	16
TABLE 2.5	- PRODUCTION-INDUCED CHANGES IN THE AVERAGE TEMPERATURE OF GEOTHERMAL RESERVOIRS	17
TABLE 2.6	- GEOTHERMAL RESERVOIR PRESSURE CHANGES	18
TABLE 2.7	- CHEMICAL COMPOSITION OF GEOTHERMAL WATERS, in mg/l	19
TABLE 2.8	- SPECIFICATIONS FOR MONITORING SUBSURFACE VERTICAL DISPLACEMENTS	20
TABLE 2.9	- SPECIFICATIONS FOR MONITORING SUBSURFACE HORIZONTAL DISPLACEMENTS	21
TABLE 2.10	- RELATION BETWEEN SUBSIDENCE PARAMETERS AND WELL CASING PROTRUSION	22
TABLE 2.11	- CAPABILITIES OF EXISTING SUBSIDENCE MONITORING INSTRUMENTS	23
TABLE 2.12	- PROMISING INSTRUMENTS FOR GEOTHERMAL SUBSIDENCE MONITORING	27
TABLE 2.13	- INSULATION SUITABLE FOR GEOTHERMAL TEMPERATURES	28
TABLE 2.14	- THERMAL EXPANSION CHARACTERISTICS OF SELECTED MATERIALS	29
TABLE 2.15	- EFFECT OF TEMPERATURE ON ELASTIC MODULUS AND ELECTRICAL RESISTANCE	30
TABLE 2.16	- TEMPERATURE LIMITS OF MECHANICAL SEALS	31
TABLE 2.17	- SOME RECOMMENDED MATERIALS AND TECHNIQUES FOR GEOTHERMAL INSTRUMENTATION	32
TABLE 2.18	- PROMISING IMPROVED INSTRUMENTS	33
TABLE 2.19	- TRANSDUCER APPLICATION FOR GEOTHERMAL SUBSIDENCE	34
TABLE 2.20	- PERFORMANCE OF CIRCUIT ELEMENTS AT 300°C	36
TABLE 2.21	- SELECTED RECORDER SYSTEMS	38
TABLE 3.1	- MODIFIED RATING SYSTEM	65
TABLE 3.2	- INSTRUMENT SYSTEM RATING MATRIX	66
TABLE 3.3	- GENERAL SPECIFICATIONS FOR SELECTED INSTRUMENT SYSTEMS	67

LIST OF FIGURES

		Page
Figure 1.1	- PROGRAM FOR INSTRUMENT DEVELOPMENT (CATEGORY 3)	3
Figure 1.2	- THREE BASIC TYPES OF EXTENSOMETERS	4
Figure 2.1	- BASIC ELEMENTS OF POSSIBLE MECHANICAL HEAT PUMP	39
Figure 2.2	- CASCADING 3-STAGE THERMOELECTRIC REFRIGERATOR	40
Figure 2.3	- RELATION BETWEEN LENGTH INCREASE AND TEMPERATURE FOR CARBON STEEL AND INVAR	41
Figure 2.4	- USE OF THREE SENSOR PROBE TO DETERMINE DISTANCE BETWEEN DOWNHOLE MARKERS	42
Figure 2.5	- REED SWITCH SENSOR	43
Figure 2.6	- SOME POSSIBLE SIGNAL CONDITIONING SYSTEMS	44
Figure 2.7	- A POSSIBLE ABOVE-GROUND COMPUTER STATION	45
Figure 2.8	- SLIP COUPLINGS FOR SUBSIDENCE MONITORING	46
Figure 2.9	- POSSIBLE CORRUGATION ARRANGEMENTS	48
Figure 2.10	- ACCESS GLAND FOR SETTLEMENT PROBE	49
Figure 2.11	- AUXILIARY CASING INSTALLATION	50
Figure 2.12	- MULTI-SENSOR REED SWITCH PROBE	51
Figure 2.13	- AUXILIARY MAGNA-CASING FOR REED SWITCH PROBE	52
Figure 2.14	- VIBRATING WIRE METHOD	53
Figure 2.15	- PROXIMITY SENSOR PROBE METHOD	54
Figure 2.16	- WEIGAND EFFECT SETTLEMENT DEVICE	55
Figure 2.17	- DOUBLE FLUID SETTLEMENT DEVICE METHOD	56
Figure 3.1	- TRIPLE SENSOR INDUCTION PROBE METHOD	68
Figure 3.2	- TRIPLE SENSOR REED SWITCH PROBE METHOD	69
Figure 3.3	- TRIPLE SENSOR OSCILLATOR-TYPE MAGNET DETECTOR METHOD	70
Figure 3.4	- TRIPLE SENSOR GAMMA RAY DETECTOR METHOD	71
Figure 4.1	- RECOMMENDED MANAGEMENT STRUCTURE FOR SUBSIDENCE TOOL RESEARCH	77
Figure 4.2	- ALTERNATE MANAGEMENT STRUCTURE FOR SUBSIDENCE TOOL RESEARCH	78
Figure 4.3	- OUTLINE OF PROPOSED GEOTHERMAL SUBSIDENCE RESEARCH (CATEGORY 3)	79

SUMMARY

SUMMARY

This report summarizes research carried out at Woodward-Clyde Consultants between September 1977 and May 1979. In this study the requirements for a subsurface geothermal subsidence instrument were reviewed. Available instruments for monitoring subsurface displacements, both vertical and horizontal, were studied and the most capable instruments identified. Techniques and materials for improving existing or developing new instruments were evaluated. Elements of sensor and signal technology with potential for high temperature monitoring of subsidence were identified. Drawing from these studies, methods to adapt production wells for monitoring were proposed and several new instrumentation systems were conceptually designed. Finally, four instrumentation systems were selected for future development.

These systems are:

- TRIPLE SENSOR INDUCTION SENSOR PROBE (with casing collar markers)
- TRIPLE SENSOR GAMMA RAY DETECTOR PROBE (with radioactive markers)
- TRIPLE SENSOR REED SWITCH PROBE (with magnet markers)
- TRIPLE SENSOR OSCILLATOR-TYPE MAGNET DETECTOR PROBE (with magnet markers)

All are designed for use in well casing incorporating slip couplings or bellows sections, although the gamma ray detector probe may also be used in unlined holes. These systems all measure vertical movement. Instruments to measure horizontal displacement due to geothermal subsidence were studied and the required instrument performance was judged to be beyond the state-of-the-art. Thus, no conceptual designs for instruments to monitor horizontal movement are included in this report.

It is proposed that these four systems be laboratory tested to identify the most promising system. A full scale prototype of that system may then be constructed and field tested. Expected cost of this development is $1,040,000 over a 3 year period.

1.0 INTRODUCTION

1.0 INTRODUCTION

The measurement of subsidence in geothermal areas can contribute to an understanding of the processes occurring in a geothermal reservoir area during production. Subsidence data can be used to build mathematical models, to assess the value of various production schemes such as water injection, and to predict future movements that may affect land use and particularly that might endanger wells and plant equipment. This study is concerned with identifying capable available instruments or recommending and specifying developmental work necessary for new instruments to monitor subsurface movements due to geothermal production.

The geothermal environment is hostile, and conventional equipment used for oil, gas and groundwater wells will not function in it. The challenge of this project was to develop a subsidence monitoring instrument that will survive the geothermal environment and that will provide accurate results. In the 300° hot saline water of geothermal wells, rubber and plastics disintegrate, electronic components fail, corrosion and abrasion attack all but the most resistant steels, and severe scaling fouls moving parts. Conventional techniques have been carried to the limit for use in hot oil wells. In general they cannot be pushed further for geothermal use. Thus, off-the-shelf instruments do not exist for geothermal use. However, as we indicate throughout this report, technology in high temperature electronics and high-temperature corrosion-resistant materials is rapidly improving as a result of research on jet engine components, space vehicles, geothermal instrumentation, microwave transmission, and other areas. We have surveyed this emerging technology and have proposed four subsidence-monitoring instrument systems that incorporate many of these new developments and that we recommend for geothermal subsidence monitoring needs. The instruments and the development process are discussed below.

1.1 OVERVIEW

This report summarizes a research project carried out at Woodward-Clyde Consultants from September 1977 to May 1979. It is part of a comprehensive study of geothermal subsidence, sponsored by the Department of Energy (D.O.E.) and administered by Lawrence Berkeley Laboratory. The D.O.E. project encompasses many aspects of geothermal subsidence, such as a review of case histories and an analysis of the economic impact of subsidence. The purpose of Category 3 of the overall LBL study is to develop a capability to measure vertical subsidence between two points in a geologic formation. The resulting instrument system must withstand the geothermal environment and must provide accurate data. This study of subsurface monitoring is the first part of a three-part project, as shown in Figure 1.1. The report represents the completion of Part 1, Conceptual Designs for Subsurface Monitoring of Geothermal Subsidence. The decision to undertake Parts 2 and 3 has not yet been made. A panel of industry representatives, reservoir engineers, and geothermal experts met in October 1978 to assess the feasibility of the proposed instrument development and to advise the D.O.E. whether the probability of geothermal subsidence and associated problems was high enough to justify anticipated development costs. Feedback from that workshop has been incorporated into the text of this report and is presented in Appendix A.

This report provides a brief summary of research reported in four previous reports. It also contains a synthesis of that material, and concludes with recommendations for future research. The four interim reports, references WCC (1977a), WCC (1978a), WCC (1978b) and WCC (1978c), are included in this report as appendices, bound separately as Volume 2.

1.2 ORGANIZATION OF THE STUDY

The study of instruments for subsurface monitoring of geothermal subsidence began with a concerted effort to define the problem and measurement goals. The study then proceeded with a review of available instruments (WCC, 1977a), an examination of methods and materials that could be used to improve existing instruments or develop new ones (WCC, 1978a), a review of sensor and signal technology to determine what instrumentation might be useful for new instruments or to modify existing ones (WCC, 1978b), and finally, the conceptualization of several new instruments which incorporate some of the favorable features of the technology studied and may be successful for geothermal work (WCC, 1978c).

All of these studies are brought together in this final report (Section 2). The candidate instruments are comparatively rated, and the most promising instruments are identified for future development (Section 3). Research needs and priorities for development of the instruments are discussed in Section 4.

1.3 INTRODUCTION TO SUBSURFACE MONITORING SYSTEMS

This report discusses instrumentation systems that may be used to monitor ground movements in and above geothermal reservoirs. The basic components of instrumentation systems that monitor vertical displacements (extensometers) and of those that detect horizontal movement (inclinometers) include (1) a borehole, (2) markers, (3) a sensing device and read-out, (4) a logging system, and (5) an orientation device (inclinometers only). The performance of each component of the instrument system will affect the quality of the data, as discussed in the report and in Appendix A.

Sketches of three common types of extensometers are shown in Figure 1.2. Wire- and rod-type extensometers compare the known length of the wire or rod to the vertical distance between the downhole anchor and the surface. One type of probe extensometer measures the distance between a downhole marker and the surface using a distance-graduated cable. Another type compares the probe length to the spacing between adjacent downhole markers.

Inclinometers are usually probes. The angle of tilt of the probe is measured at successive depths. This value is then converted by integration to horizontal offset. Movements due to subsidence are determined for both extensometers and inclinometers by comparing data taken at different times.

The major portion of this report concerns extensometer development. Inclinometers were not studied after Interim Report 1 in view of the greater need for vertical subsidence monitoring instruments, and because we concluded that the technology needed to adapt inclinometer monitoring schemes to geothermal environments was beyond the present state-of-the-art.

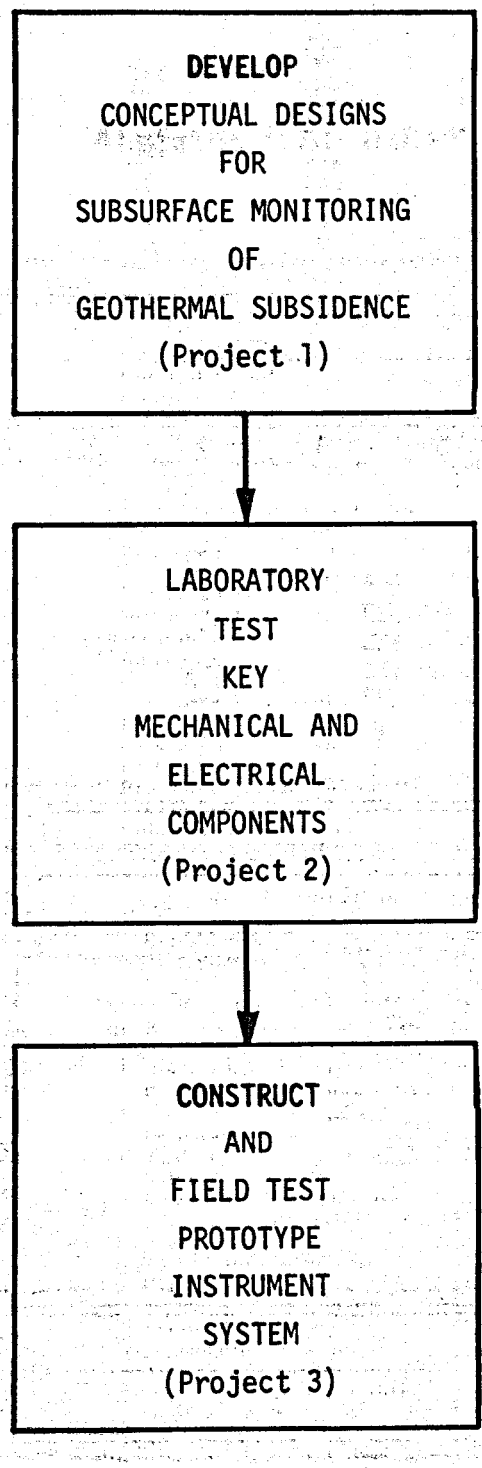

Figure 1.1 - PROGRAM FOR INSTRUMENT DEVELOPMENT (CATEGORY 3)

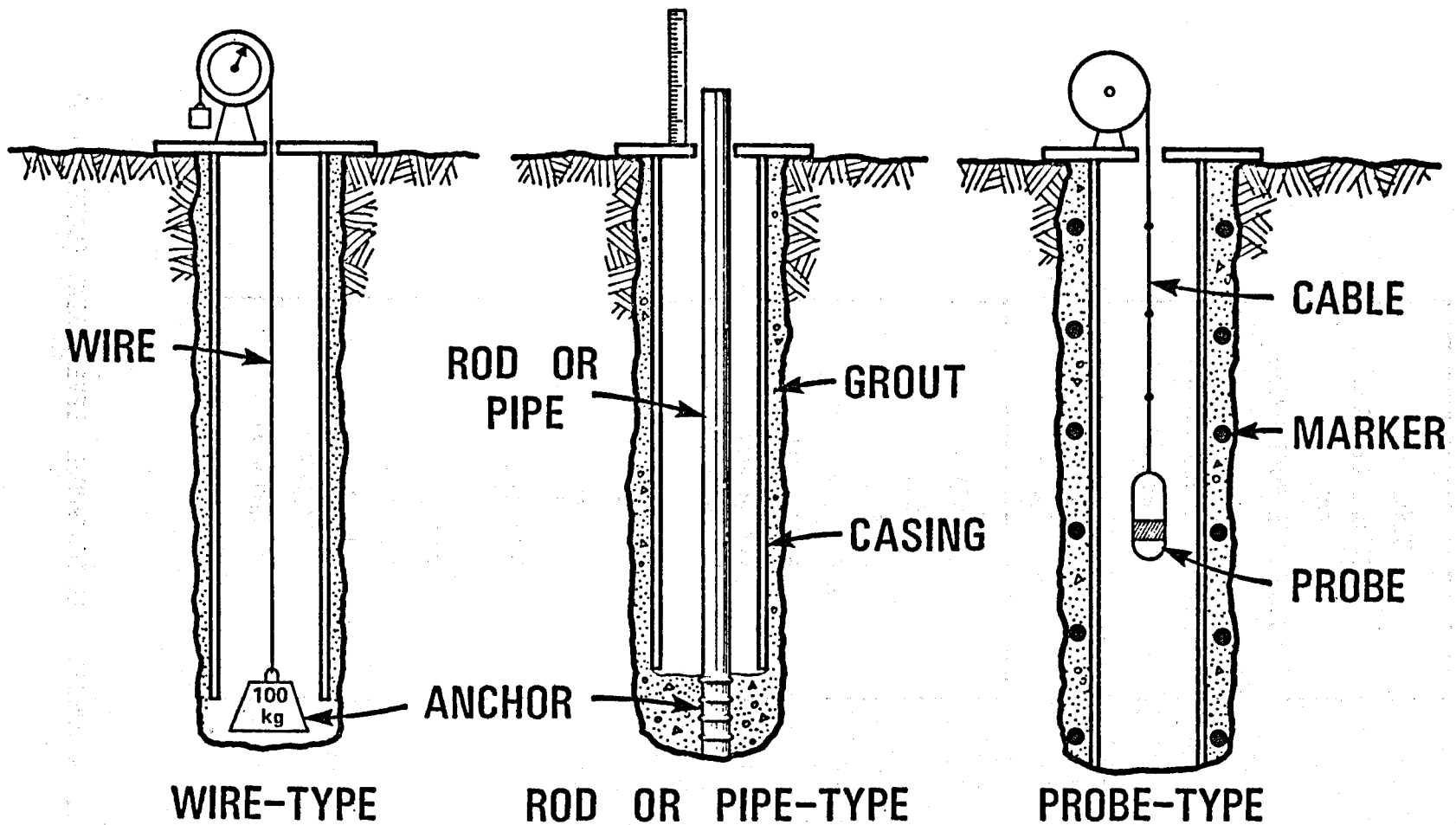

Figure 1.2 - THREE BASIC TYPES OF EXTENSOMETERS

2.0 INSTRUMENT DEVELOPMENT

2.0 INSTRUMENT DEVELOPMENT

This section provides an overview of the various studies that made up this project.

2.1 REVIEW OF AVAILABLE INSTRUMENTS

2.1.1 Measurement Requirements

The first step in this study was to define what the instrument must do and what hazards it must cope with (WCC, 1977a). We began by considering what measurements the instrument must make, the probable magnitude of those movements and what accuracy, monitoring frequency, and spacing between points would be useful to hydrologists, modelers, and civil engineers. Our review drew on available information on geothermal fields and production techniques (Table 2.1), supplemented by subsidence data from water (Table 2.2) and hydrocarbon (Table 2.3) withdrawal areas. We also examined the special environmental problems, particularly high temperature (Tables 2.4 and 2.5), high pressure (Table 2.6), and corrosive, scaling fluids (Table 2.7), that a geothermal environment presents. The requirements imposed by the environmental problems and measurement needs were summarized in a set of specifications, which can be used to evaluate existing, modified or new instruments for subsidence monitoring; refer to Tables 2.8 and 2.9.

Reinjection of waste brine will probably be practiced in most geothermal areas, with the benefit that the magnitude of subsidence is minimized. Consequently, the specifications in Tables 2.8 and 2.9 may in fact be minimum standards if reservoir engineers are to derive useful data on compaction processes from the field measurements (refer to Appendix A-3).

2.1.2 Role of the Borehole

To date, all reported subsurface strain measurements have been made in cased wells. We first evaluated whether a borehole is necessary at all. Gravity measurements appear to be the only geophysical method that can detect compaction at depth without a borehole. Unfortunately, this method is not likely to be useful because the neeeded input on fluid withdrawal and reservoir dimensions are hard to determine. Also while this method may provide average compaction, it does not provide a subsidence profile with depth (WCC, 1977a).

For measurement in cased wells, the effect of the casing on the local subisdence pattern and its measurement was examined. There are three basic problems. (1) Slip may occur between the ground and the well so that the commonly used technique of monitoring casing movement may not be meaningful. Slip, as indicated by well protrusion from the ground, has been noted in Mexico City, Mexico; the Po Delta, Italy; the Santa Clara Valley, California; and other fluid withdrawal areas (Table 2.10). (2) Where a good bond exists between the casing and ground, the casing

will draw loads onto itself in proportion to its modulus and may locally alter the settlement pattern. (3) In areas of large subsidence movements, a good casing/ground bond may result in compression large enough to fail the casing and render the well unsuitable for monitoring. Well failures due to subsidence have been observed at Wilmington, California, Lake Maracaibo, Venezuela and other fluid withdrawal areas.

In view of the three monitoring problems cited above, we then looked at geothermal well completions to evaluate what types of geothermal wells may be susceptible to monitoring problems. Above the production zone, all U.S. geothermal wells are cased and cemented. In the Gulf Coast areas, subsidence due to non-geothermal causes may cause casing slip or buckling in strata above the production zone. In other U.S. geothermal areas, casing performance above the production zone is not expected to be a problem. Within the producing zone, the completion method and associated potential measurement problems vary according to the type of geothermal resource. Vapor-dominated wells are unlined in the production zone, so casing compression is not a factor. Liquid-dominated wells generally use a slotted liner, perhaps with a gravel-pack. In these wells movements are expected to be small because of the anticipated use of brine reinjection for this type of field. Slip between casing and the ground may be a problem, particularly where no gravel packing is used. In geopressured wells, the production zone is cased, cemented and perforated. Large movements are expected which may threaten the installation due to casing collapse.

For the conditions where casing slip or collapse threatens the accuracy or stability of the monitoring installation, it is necessary to introduce flexibility into the casing. This may be done by the use of slip couplings or bellows sections. (See Section 3 for discussion of these techniques.)

2.1.3 Available Extensometers and Inclinometers

Displacement-measuring instruments used for geotechnical, geophysical, and subsidence monitoring applications were examined with respect to availability, performance characteristics, and installation and operating requirements (Table 2.11). The instruments were then rated for their ability to make the measurement (axial or normal displacement) with the desired range and accuracy, and for their ability to cope with the unique temperature, corrosion, scaling and depth problems associated with geothermal environments (WCC,1977a). None of the available instruments were found suitable without extensive modification for geothermal subsidence monitoring. The most promising of existing instruments are presented in Table 2.12.

2.2 METHODS FOR IMPROVING EXISTING INSTRUMENTS

2.2.1 Corrosion Control

Corrosion may reduce the service life of monitoring equipment and impair its operation. Permanently installed instruments will experience the most severe conditions. A combination of corrosion-resistant techniques will be required. The best approach is to select an inherently corrosion resistant material. For long-term application in a geothermal environment, super-alloys such as Hastelloy-C and Inconel 625 will probably be the best choice. Austenitic stainless steels such as AL-6X and Type 316 will be adequate for short immersion times. Cathodic protection by current impression may be a useful tool to protect long-term installations if current requirements are reasonable. The performance of most metals can be enhanced by the use of coatings and paints. However, the hazards associated with coating/paint failure, particularly in permanent installations, seriously mitigates their usefulness in the harsh geothermal environment. Addition of corrosion/inhibitors to the geothermal fluid will probably reduce corrosion rates. The risk is that scaling or clogging of the producing formation may result (WCC, 1978a).

2.2.2 Scaling Control

In geothermal well instrumentation, problems may arise due to the build-up of silica (SiO_2) or calcite ($CaCO_3$) scale. The problems for instrumentation may include blockage or narrowing of the well, sealing of moving parts to the casing and blockage of well casing grooves. The control of geothermal scale has not been widely reported, and to date has largely been confined to removal and prevention after scaling was observed at damaging levels. Maintenance of a backpressure sufficient to prevent flashing appears to be the most successful approach. Since data on scale control are limited, the best approach is to design equipment to operate under conditions of moderate scaling and to accommodate periodic cleaning in the upper portions of the well (WCC, 1978a).

2.2.3 Temperature Control - Insulation and Cooling

Most instrumentation does not operate effectively at geothermal temperatures. One solution is to provide insulation and cooling for sensitive components. Vacuum-type insulation appears to be the most effective for geothermal conditions (Table 2.13). Dewar flasks are not as effective as multilayer foil insulation. However, multilayer insulation may pose some problems in the design of the supports to prevent crushing of the insulation. For a 1 m long, 100 mm O.D. instrument chamber, maintained at 100°C, heat flow was calculated to be 10 watts allowing for heat leaks through support and electrical connections (WCC, 1978a).

For removal of this heat influx over a 10 hour to 100 hour logging cycle, several cooling systems were evaluated (WCC, 1978a). Two types of heat pumps, a mechanical heat pump that uses water as a refrigerant (Figure 2.1) and a thermoelectric heat pump that uses high temperature thermoelectric materials (Pb-Te, Ge-Te, Ag-Sb, or Sn-Te; Figure 2.2), may be able to

provide the necessary cooling. Both reject heat to the well at temperatures in excess of ambient (300°C). While these cooling devices have some drawbacks (scaling of moving parts for the mechanical heat pump, high current for the thermoelectric heat pump), maintenance of a constant temperature of 100°C would minimize many temperature-induced problems in electronic components.

2.2.4 Temperature Control - Material Selection

The most serious temperature effects on measurement of subsidence are probably length change, modulus change and electrical resistance change with temperature (WCC, 1978a). (Performance of electrical components is discussed in Section 2.3). In the design of geothermal subsidence monitoring equipment for use at 300°C, the engineer must assess and attempt to minimize the potential effects of temperature on the response of the materials in the instrument. Not only must the probe body be temperature-compensated to reduce length changes, but also its component instrumentation, such as strain gauges, cantilevers, and pick-up coils, must be compensated in various ways to reduce errors due to changes in length, elastic modulus, and electrical resistance.

Many of the problems with length changes can be lessened by using controlled-expansion alloys such as 42% Ni-Fe (Table 2.14), by constructing the instrument using materials with equal expansion coefficients, and by using unstrained sensors near strained sensors to monitor temperature effects on signal levels. Note that Invar is not a low expansion alloy at geothermal temperatures (Figure 2.3). Similarly, a relatively new alloy, Super-Invar, looks promising for temperatures below 200°C, but its thermal coefficient of expansion increases rapidly and non-linearly above that temperature (see Section 6.1 in Appendix A).

Elastic modulus changes can be reduced by using controlled-modulus alloys such as Elvinar, Iso-elastic and Ni-Span-C (Table 2.15a).

Electrical resistance changes can be reduced by using alloys with near-zero coefficients of resistance change (Table 2.15b). An unstrained gauge near a strained gauge can be used to compensate for short term (reversible) and long term (due to annealing) changes in resistance. Heat treatment helps reduce long term resistance changes.

2.2.5 Other Materials and Operation Problems

Other materials and operational problems associated with geothermal instrumentation were briefly assessed. Mechanical seal design is a major problem (Table 2.16; WCC, 1978a). Metal-to-metal seals are the best for geothermal use, but sometimes cannot be used because of electrical requirements. A second problem is limitations of electrical cables (WCC, 1978a). Nevertheless, the manufacture of an armored, insulated cable for geothermal environments appears to be within current technology. However, such cable will have to be custom-made. It will be costly and may require frequent repairs or replacement due to the harsh environment. Friction, tool bounce and cable stretch, and inclinometer orientation are depth-

related problems (WCC, 1978a). No easy solution exists for the problem of friction of permanently installed extensometer rod/wire/pipe against the side of the borehole. Very straight holes may minimize frictional contacts, but may be hard to achieve in geothermal areas. The use of a three (or more) sensor probe which detects downhole markers significantly reduces the depth measuring problems associated with tool bounce and cable stretch (Figure 2.4). The use of gyroscopes appears to be the most promising solution for inclinometer orientation to replace the grooved casing and tracking wheels that orient conventional geotechnical inclinometers used for horizontal movement measurements.

2.2.6 Recommended Materials and Techniques

A summary of materials and techniques that can be used to improve existing equipment and design new ones is presented in Table 2.17. The most promising existing instruments, identified earlier, were re-rated, assuming that the recommended modifications were incorporated into the instrument. The instruments that received high ratings in this evaluation are presented in Table 2.18.

2.3 SENSOR AND SIGNAL TECHNOLOGY

A number of instrumentation components were examined for their applicability to geothermal subsidence monitoring.

2.3.1 Transducers

A few transducers may be capable of providing accurate data at geothermal temperatures and may survive rough field conditions (Table 2.19; WCC, 1978b). Reed switch sensors offer the most promise because they require a minimum of downhole electronics and have a digital, "on-off" signal (Figure 2.5). Three gauges offer partial capabilities for geothermal measurement but require some high temperature signal conditioning: (1) electrical resistance strain gauges and (2) LVDTs are available in high temperature packages but need high temperature signal conditioning to get a good signal to the surface, and (3) vibrating wire strain gauges provide a frequency signal only minimally subject to deterioration over long leads but need temperature compensation and sophisticated surface signal conditioning to excite and pick-up the wire vibration frequency.

2.3.2 Signal Conditioning Equipment

Figure 2.6 shows some possible signal conditioning systems (see also WCC, 1978b). High temperature components are available to construct signal conditioners for downhole operation (Table 2.20 and Section 6.2 in Appendix A). Analog-to-digital (A-D) conversion is desirable to minimize signal degradation over long lead wires for analog-type signals. However, the accuracy of the A-D conversion must be evaluated, even with high temperature components, over the the 20°C to 300°C temperature range.

2.3.3 Data Transmission Equipment

Hard wire telemetry using multiplexing techniques can reduce cable requirements (WCC, 1978b). Accuracy of the transmitted data will be dependent on the sampling rate and the high temperature performance of the multiplexing equipment. The benefits of reduced cable replacement costs and improved performance of mono-conductor cable (see Appendix A-6.2.3) will have to be balanced against the problems of the more complex electronics associated with telemetry use.

2.3.4 Data Processing Equipment

A variety of data processing systems were reviewed (Table 2.21; WCC, 1978b). Simple signal conditioning equipment interfaced to a strip chart recorder or event recorder is probably adequate for initial instrument testing. Magnetic tape recording or more sophisticated data acquisition systems (Figure 2.7) may merit consideration after the instrument is debugged.

2.4 ADAPTION OF PRODUCING WELLS TO INSTRUMENTATION NEEDS

It is probably economical to use producing wells for monitoring since no (or minimal) additional expense is incurred for drilling. Also, if just a few monitoring-only wells are installed, the zone of maximum compaction may be missed if unusual subsidence patterns develop, as at Wairakei. The adaption of production wells to monitoring will permit a broader area of the geothermal field to be studied.

In some geothermal wells (in particular vapor-dominated wells), the producing zone is unlined. The use of radioactive bullet markers combined with a suitable gamma-ray detector probe was determined to be a potentially workable system for unlined wells. Radioactive bullets may also find use in cased wells where movements of the slotted liner or casing are not expected to be representative of formation movements. (Refer to Section 2.1.2.) Cased or lined wells with good casing/formation adhesion offer many options for monitoring. However, there is a need to introduce flexibility into conventional well casing to key it to the adjacent ground and prevent casing failures in zones of large movements. The use of slip couplings (Figure 2.8a and b) and the use of bellows sections (Figure 2.9) along the length of the casing were considered in Section 2.1.2. Bellows sections may be installed at regular intervals using an oil industry hydraulic corrugating tool (modified casing expander) once the casing is in place. However, bellows sections may enhance corrosion and promote collapse due to stress concentrations. Slip couplings, although used in the oil industry, are not yet available for geothermal use (see Appendix A-4.0).

To minimize interference with fluid production, two techniques were proposed. An access gland to allow entry of a settlement probe while maintaining flow, pressure and temperature in a producing well is shown on Figure 2.10. Access glands are used in the oil industry, and special designs have been developed for geothermal logging (Veneruso, 1979). Even

with an access gland, it may still be necessary to shut in the well if the flowing fluid causes the probe to bounce as it is lowered. This approach is used in the oil industry. The access gland serves to maintain well temperature and pressure in that case.

If it proves undesirable to use the production casing for monitoring, small (25-50 mm) diameter auxiliary casing is proposed. This casing, strapped outside the production casing and installed with it, has no flow and allows monitoring without interference with geothermal fluid production (see Figure 2.11). However, its use may complicate drilling and cementing operations and may be very costly.

2.5 NEW CONCEPTS IN SUBSIDENCE INSTRUMENTATION

A number of new instrumentation concepts were proposed. Although many of the new concepts draw on techniques and materials discussed in earlier reports, each of the monitoring methods and well modifications presented includes new features to improve the ease and/or accuracy of subsidence measurement.

2.5.1 New Concept for Monitoring in Production Well Casing

A multi-sensor reed switch settlement probe is proposed for use in cased production wells (Figure 2.12). The casing would incorporate magnet markers at 15-20 m intervals and slip couplings (or bellows sections) for flexibility. The instrument system provides direct readout to the nearest 25 mm by using a series of closely spaced reed switches at each end of the probe. With the addition of a precision electronic timer, distances can be measured to 0.1 mm, although irregular probe speed may not allow the full accuracy to be realized in the field.

2.5.2 New Concepts for Monitoring in Auxiliary Casing

Five monitoring methods using probes and one fluid settlement device were developed in concept for use in auxiliary casing. Key features of these instruments are as follows:

- Single Sensor Reed Switch Probes -- This probe uses casing with strain-free liner segments so in-situ calibration is obtained without the use of a 3-sensor probe (Figure 2.13).

- Triple Sensor Oscillator-Type Magnet Detector -- More sensitive than a reed switch, it may have a better chance of detecting magnetic markers at 300°C, at which sensitivities of all magnet detectors decrease. (See Section 3, Figure 3.3).

- Single Sensor Vibrating Wire Probe -- Permanently installed vibrating wires are monitored by a portable probe. This system monitors strain without depth or distance measurement, so results are unaffected by tool bounce or cable stretch (Figure 2.14).

- Single Sensor Proximity Detector Probe -- The probe counts closely spaced corrugations on auxiliary casing between adjacent couplings. In-situ calibration is provided by strain-free liner segments. The system gives direct readout of subsidence to the nearest 12 mm (Figure 2.5).

- Triple Sensor Weigand Device Probe -- Another type of magnet detector, it is available in commercial modules for use to 250°C (Figure 2.16).

- Double Fluid Settlement Device -- The surface-monitored pressure of a slug of mercury as it moves through the system displacing nitrogen is proportional to the distance between adjacent reference points. No downhole probes, wires, or rods are needed (Figure 2.17).

2.5.3 Comparative Rating of New Concepts

The seven new instrument methods were comparatively rated. Several of the instruments were suitable for use in a variety of the proposed casings, but were discussed in reference to one casing type only. To take into account the effect of casing, each instrument was rated for several casing types, where appropriate. The most promising new instrument concepts meriting further consideration for development were identified as:

- Multi-Sensor Reed Switch Probe (for use in modified production casing).

- Multi-Sensor Reed Switch Probe (for use in simple auxiliary casing).

- 3 Sensor Oscillator-Type Magnet Detector Probe (for use in modified production casing).

TABLE 2.1

COMPARISON OF GEOTHERMAL SUBSIDENCE AREAS

(From Atherton and Others, 1976)

	Wairakei New Zealand	Broadlands New Zealand	Kawerau New Zealand
SURFACE DEFORMATION			
Subsidence			
Area Affected	65 km^2 (1956-1970)	73 km^2 (1969-1975)	-1 km^2
Maximum Subsidence	4.7m (1956-1974)	0.175m (1969-1975)	0.028 (1970-1971)
Subsidence Rate	Max. 40-45 cm/yr (1967-1974)	7.5 cm/yr (1969-1972)	Max. 2.8 cm/yr (1970-1972)
Horizontal Movement			
Maximum Movement	0.8m (1956-1974)	0.12m (1969-1975)	Not measured
Rate	Max. -10 cm/yr (1970)	Avg. 2 cm/yr (1969-1975)	
Associated Faulting	None	None	None
Time of Principal Occurrence	1953-1976 +	1966-1976 +	1956-1976 +
RESERVOIR MATERIALS			
Type, Age, Consolidation	Pumice breccia with sandstone and minor siltstone, medial rhyolite sill, Pleistocene	Pumice breccia and tuff, Pleistocene, with medial siltstone and rhyolite aquitards, Pleistocene	Pumice breccia and ignimorite, with medial andesite sills, Pleistocene
Porosity	Extremely variable due to cementation	15-50% (highest in pumice breccia)	
Permeability	< 1-30 mD (intergranular) ≥ 1 D (fracture)	Moderately high	
Compaction Behavior	Maximum subsidence outside area of greatest production. Local sills of volcanic rock may prevent transfer of load to underlying reservoir		
OVERBURDEN			
Type, Competence, Deformation Properties	Tuffaceous shale and sandstone with interbedded tuff and conglomerate, Pleistocene	Chiefly siltstone, mudstone, and rhyolite with minor sandstone, tuff and alluvium, Pleistocene	Pleistocene rhyolite flows and Holocene (?) alluvium
REGIONAL GEOLOGIC STRUCTURE			
Folding, Faulting, Regional Stress	Sediments drape-folded over basement highs, normal faulting with small component of right-lateral movement, indicates tensile stress	Normal faulting, with small component of right-lateral movement, indicates tensile stress	Numerous normal faults, with small component of right-lateral movement, indicating tensile stress
PRODUCTION			
Depth	150-1360m	430-1200m	460-915m
Fluid Type	Hot water and flashed steam	Hot water and flashed steam	Hot water and flashed steam
Temperature	Maximum 260°C	Maximum 300°C+	Maximum 270°C+
Production Rate	1.3×10^7 kg/day (1975)	Avg. 2.63×10^7 kg/day (1973-1975)	Max. 1.6×10^7 kg/day (1956-1970)
Total Fluid Withdrawal	930×10^9 kg (1956-1974)		
Maximum Pressure Decline	25 kg/cm^2 (1956-1974)		
Subsidence: Head Decline	.02 (1956-1974)		

+ Sources: Grindley, 1964, 1970; Stilwell and others, 1975.

TABLE 2.2
COMPARISON OF GROUNDWATER SUBSIDENCE AREAS
(From Atherton et al, 1976)

	SAN JOAQUIN VALLEY CALIF. (WESTERN AREA)	SANTA CLARA VALLEY, CALIF.	HOUSTON-GALVESTON, TEXAS	DENVER, COLORADO	ELY-PICACHO, ARIZONA	LAS VEGAS, NEVADA	SAVANNAH, GEORGIA	BATON ROUGE, LOUISIANA	OSAKA, JAPAN	MEXICO CITY, MEXICO	TAIPEI BASIN, TAIWAN	LONDON, ENGLAND
SURFACE DEFORMATION												
Subsidence												
Area affected	> 9,000km^2	600km^2(1969)	10,000km^2 (1969)	~800km^2(1969)	?	500km^2(1969)	130km^2(1969)	500km^2(1969)	280km^2(1951)	25+m^2(1969)	~100km^2(1969)	~275km^2(1969)
Maximum subsidence	9.15m	4m(1969)	1-2m(1969)	.4m(1962)	2.3m(1969)	1m(1969)	0.2m(1969)	0.3m(1969)	3-4m(1969)	8m(1969)	1m(1969)	0.7ft(?) (1969)
Subsidence rate	max 15-37cm/yr	max 22cm/yr	2mm-10cm/yr	avg 6mm/yr (1962)	1-40cm/yr	4m-3cm/yr (1963)	max 4mm/yr		0.5-12cm/yr (1885-1951)	4-50cm/yr (1969)		
Horizontal Movement	*	*	*	*	*	*	*	*	*	*	*	*
Associated Faulting	Fissuring due to hydro-compaction	None	None	None	Extensive fissuring peripheral to basin	None	None	None	None	None	None	None
Time of Principal Occurrence	1935-1970+	1920-1967+	1943-1964+	1890(?)-1960(?)	1952-1967+	1935-1963+	1933-1955	1934-1965+	1928-1943 1948-1965+	1938-1968+	?-1966+	1820(?)-1931(?)
RESERVOIR MATERIALS												
Type, Age, Consolidation	Unconsolidated alluvial and lacustrine sediments of late Cenozoic age	Semi-consolidated alluvial and bay sediments of Pliocene and Pleistocene age	Unconsolidated sand and clay (fluviatile and shallow marine) of Pleistocene to Miocene (?) age	Alluvial deposits (age?); late Cretaceous shale, coal, sandstone, siltstone (blackish and shallow marine)	Unconsolidated alluvial and lacustrine (?) sediments of late Cenozoic age	Unconsolidated alluvial sediments of late Cenozoic age	Soft, granular limestone with sand and marl; middle Eocene to Miocene age	Unconsolidated fluviatile and shallow marine sediments of Miocene to Holocene age	Unconsolidated alluvial (?) sediments of Quaternary (?) age	Unconsolidated alluvial and lacustrine sediments of late Cenozoic age	Unconsolidated alluvial sediments of late Cenozoic age	Chalk aquifer overlain by thick clay
Porosity	28-61.2% (ave 40%)						High			84-90% in overlying bentonitic aquiclude		
Permeability	.001-650 gpd/ft^2											
Mineralogy	montmoril-lonitic clay	montmoril-lonitic clay	montmoril-lonitic clay		montmoril-lonitic clay					montmoril-lonitic clay		
Compaction Behavior	Most compaction in fine-grained aquitards			About 3/4 of compaction in clays			Compaction in soft limestone, clay and marl			Both primary and secondary compression, most compaction in over-lying aquiclude		
OVERBURDEN												
Type, Competence, Deformation Properties	Unconsolidated alluvial and lacustrine sediments of Holocene age	Unconsolidated bay and alluvial deposits of Pleistocene and Holocene	Unconsolidated sand and clay (fluviatile and shallow marine) of late Cenozoic age		Similar to reservoir materials	Similar to reservoir materials, plus clay aquitard	Silty limestone		Similar to reservoir materials?	Unconsolidated silt and volcanic ash (lacustrine) of late Pleistocene age		
REGIONAL GEOLOGIC STRUCTURE												
Folding, Faulting, Regional Stress	Intermontane basin, small dips toward basin center	Intermontane basin, small dips toward basin center	Strata flat, gently dipping; normal faulting			Part of subsidence due to regional tilting, filling of Lake Mead				Intermontane basin, small dips toward basin center		
PRODUCTION												
Depth	90-900m	50-3-0m	50-600+m	?-760m	100-300+m	60-300(?)m		40-900(?) m	10-200(?)m	Chiefly 10-50m	30-200(?)	90-? (1969) m
Fluid Type	cold water	cold water	cold water	cold water	cold water	cold water	cold water	cold water	cold water	cold water	cold water	cold water
Production Rate	>3.4x10^{6}m^3/day (1943-1959)	6.8x10^{2}m^3/day (1950's)	8.7x10^{5}m^3/day (1956)	7.6-19x10^{4}m^3/ (1951-1961)	2.2-112x10^{6}m^3/ day (1937-1960)		8.7-24x10^{4}m^3/ day		1.1-11x10^{4}m^3/ day			
Total Production	>1.94x10^{10}m^3 (1943-1959)		4.32x10^{9}m^3 (1943-1951)	1.12x10^{9}m^3 (1883-1962)								
Maximum Pressure Decline	15kg/cm^2(150m) (1969)	~5kg/cm^2(~50m) (1962)	10kg/cm^2(100m) (1962)	18kg/cm^2(180m) (1962)	3-6kg/cm^2 (30-60m) (1969)	~3kg/cm^2 (~30m) (1969)	~4kg/cm^2(~40m) (1969)			~3kg/cm^2 (~30m) (1969)		4-10 kg/cm^2 (38-99m) (1936)
Subsidence Head Decline Ratio	.01-.08	.1-.08	.01	.002	.04	.03	~.003			.25		.07
Production From Compaction	29-50% (1943-1959)		22%									

* Not Measured

Sources: Poland, 1969; Poland and Davis, 1969

TABLE 2.3
COMPARISON OF MAJOR OIL AND GAS SUBSIDENCE AREAS
(From Atherton et al, 1976)

	WILMINGTON CALIFORNIA	LONG BEACH CALIFORNIA	INGLEWOOD CALIFORNIA	HUNTINGTON BEACH CALIFORNIA	GOOSE CREEK TEXAS	LAKE MARACAIBO VENEZUELA	PO DELTA ITALY	NIIGATA JAPAN
SURFACE DEFORMATION								
Subsidence								
Area Affected	>65km^2(1970)	31 km^2	11 km^2	37 km^2	10 km^2	400-700 km^2	>400 km^2	>800 km^2
Maximum Subsidence	8.8m(1928-1970)	0.75m(1925-1967)	1.73m(1911-1963)	1.22m(1933-1965)	1m(1918-1925)	0.3 -3.3m(1926-1954)	2m	0.8m(1900-1960)
Subsidence Rate	33-77cm/yr (1947-1958; before injection)	avg. 1.8cm/yr (1925-1967)	avg. 3.3cm/yr (1911-1963)	avg. 3.8cm/yr (1933-1965)	avg. 14cm/yr (1918-1923)	30cm/yr(1930's)	1-3cm/yr(1890-1950) max 30cm/yr	40-50cm/yr
Horizontal Movement								
Maximum Movement	3.7m(1937-1970)	*	0.76m(1934-1963)	*	*	*	*	*
Rate	11cm/yr(1937-1970)		avg. 2.6cm/yr (1934-1963)					
Associated Faulting								
Type	Low angle	None	High angle, normal	None	High angle, normal	None	None	None
Location	Central		Peripheral		Peripheral			
Earthquake	6(1947-1961)							
Magnitude	2.4-3.3							
Time of Principal Occurrence	1947-1958+ (now halted by injection)	1925-1967	1911-1963	1933-1965	1917-1926	1926-1954+	1950-1960	1955-1960+
RESERVOIR MATERIALS								
Type, Age, Consolidation	Unconsolidated to semiconsolidated sand with interbedded clay and shale (marine), Miocene to Pliocene Age	Similar to Wilmington	Similar to Wilmington	Similar to Wilmington	Unconsolidated sand and clay of Oligocene to Pliocene age	Interbedded sand, clay, and silt of Miocene age	Unconsolidated calcareous sands with interbedded clay (littoral and lagoonal) Quaternary age	Deconsolidated sand, sandstone and conglomerate with interbedded clay, Cenozoic age
Porosity	20-35%							
Permeability	100-1500 mD							
Compaction Behavior	60% of compaction in sands, 40% in clays and shales					Compaction roughly equal in sands and clays		Cause of some subsidence prior to development is unknown
OVERBURDEN								
Type, Competence Deformation Properties	Unconsolidated shale, sand, claystone, and siltstone of Pliocene and Pleistocene age	Similar to Wilmington	Similar to Wilmington	Similar to Wilmington	Similar to reservoir rock		Similar to reservoir rock?	Similar to reservoir rock?
REGIONAL GEOLOGIC STRUCTURE								
Folding, Faulting, Regional Stress	Broad anticline, flank dips 20-60°, with numerous transverse normal faults indicating tensile stress	Tightly folded anticline, high-angle reverse faulting indicating compressive stress	Anticline; faulting?	Anticline faulting?	Gentle dome in Miocene and younger sediments; older deposits intensely faulted		Gently folded	
PRODUCTION								
Depth	600-2300m (most 600-1100m)	median 1690m	median 900m	median 930m	200-1400m		1(one well 700m)	1-1000m
Fluid Type	oil, water, and gas	oil and water	oil; water and gas?	oil; water and gas?	oil, gas, and water	oil and water (?)	brine with dissolved methane	brine with dissolved methane
Production Rate	oil: 11-22x10^{3}m^3/day				avg. total: 1.8x10^{6}m^3/day		gas(1956): >550x10^{3}m^3/day	gas(1963): 575x10^{3}m^3/day
Total Production	oil + water: 222x10^{6}m^3 gas: 24x10^{9}m^3 total: 24x10^{9}m^3				oil(plus water? 1917-1926): >16x10^{6}m^3		Total(1956), if water=gas, 1.1x10^{6}m^3/day	Total (1956), if water=gas, 1.2x10^{6}m^3/day
Maximum Pressure Decline	≈77kg/cm^2(1100psi)				70-84kg/cm^2 (1000-1200psi) (1917-1926)	≈70kg/cm^2(1000psi)	?(15kg/cm^2 210psi) (1960)	
Subsidence: Head Decline	≈.01				≈.001		~.005	
Production from Compaction	39% (1928-1962, oil & water, ignoring gas)				20%(1917-1926)			

Notes:

1) Dates in parentheses indicate period of measurement or year of report

2) Densities used for conversions, at 25°C and 1 atm:natural gas, 0.829 kg/m^3: oil, 858 kg/m^3; water, 1000 kg/m^3

* Not measured

Sources: Van der Knaap and Van der Vlis, 1967; Poland and Davis, 1969; Verles and Castle, 1969; Mayuga, 1970; Allen, 1971; Kovach, 1974

TABLE 2.4

REPRESENTATIVE GEOTHERMAL RESERVOIR TEMPERATURES

(Modified from Ellis, 1975; average and maximum temperatures in major fields around the world)

SYSTEM	Average Temperature (°C)	Maximum Temperature (°C)
HYDROTHERMAL CONVECTION SYSTEMS		
VAPOR-DOMINATED		
USA		
The Geysers	230	285
ITALY		
Larderello	200	260
Mt. Amiata	170	190
JAPAN		
Matsukawa	220	270
LIQUID-DOMINATED		
NEW ZEALAND		
Wairakei	230	260
Kawerau	250	285
Broadlands	255	300
ICELAND		
Namafjall	250	
USSR		
Pauzhetsk	185	
USA		
Niland (Salton Sea)	300+	
EL SALVADOR		
Ahuachapan	230	250
JAPAN		
Otake	230	250
N. Hachimantai	---	>250
Hatchobaru	250	300
Onikobe	---	288
PHILLIPINES		
S. Luzon	---	
TURKEY		
Kilzidere	190	220
CHILE		
El Tatio	230	260

TABLE 2.5

PRODUCTION-INDUCED CHANGES IN THE
AVERAGE TEMPERATURE OF GEOTHERMAL RESERVOIRS

SYSTEM	TEMPERATURE (°C)				DATA SOURCE
	Initial (year measured)	Later (year measured)	Expected Final	Change	
LIQUID-DOMINATED					
Wairakei, New Zealand, Western Area	250 (1957)	240 (1969)		10	Stilwell and Others, 1975
Hypothetical Reservoir (Calculated Valves)	325		280 (after 30 years)	45	Meidav and Sanyal, 1976
VAPOR-DOMINATED					
The Geysers, California	240		234-237	3-6	Dennis McMurdie, Oral Communication
GEOPRESSURED					
Typical Reservoir				10-50?	Atherton and Others, 1976

Modified after Atherton and Others (1976)

TABLE 2.6 GEOTHERMAL RESERVOIR PRESSURE CHANGES

(a) PRODUCTION-INDUCED CHANGES IN AVERAGE GEOTHERMAL RESERVOIR PRESSURE

SYSTEM	PRESSURE (kg/cm^2)				DATA SOURCE
	Initial (year measured)	Later (year measured)	Expected Final	Change	
LIQUID-DOMINATED					
Wairakei, New Zealand	~52 (1957)	~27 (1974)		~25	Stilwell and Others, 1975
VAPOR-DOMINATED					
The Geysers, California		32-35 (1969)	~6	26-29	Koenig, 1969; McMurdie, oral communication
	13.6 (1957)	10-0 (1967)		3-6	Ramey, 1968
GEOPRESSURED	390-540		140	250-400	Papadopulos and Others, 1975

(Modified after Atherton and Others, 1976)

(b) PROBABLE RANGE OF MAXIMUM PRESSURE CHANGES

Geothermal Field Type	Pressure Change
vapor-dominated systems	30 Kg/cm^2
liquid-dominated systems	50-250 Kg/m^2
geopressured systems	250-400 Kg/cm^2

Note: Based on current generating requirements

TABLE 2.7

CHEMICAL COMPOSITION OF GEOTHERMAL WATERS, in mg/l

(From Various Localities in the Western United States and Mexico; after Chen, 1975)

Place	pH	TDS measured	Sus. Solid	Na	K	Ca	Mg	Li	Cl	HCO_3	CO_3	SO_4^-	B	F	Sulfide	NO_3	NH_4(N)	Si	Total Si	PO_4 (P)
Brady Hot Springs (Nev.)	8.6	3130	6.0	1070	51	19.5	0.075	3.0	1610	10.0	0.15	242	8.2	3.1	NA	0.47	0.3	84	85	0.01
Surprise Valley (CA)	8.8	1310	80	437	30	0.05	0.01	0.5	234	111	3.0	351	6.0	7.4	NA	2.0	0.10	97	130	0.02
Beowove Well #1 (Nev.)	9.66	1170	10.1	240	35	0.1	0.01	1.9	66	89.3	16.2	138	2.25	16	NA	16.8	0.3	230	234	0.02
Beowowe Well #2 (Nev.)	9.53	1620	2.8	250	35	0.1	0.01	1.9	65.5	117	15.8	210	2.22	17.8	NA	2.44	0.2	230	234	0.02
Wabuska Well #1 (Nev.)	8.76	1050	0.5	310	16.5	12.8	0.1	0.3	50	37.5	0.80	610	0.96	7.25	0.36	----	0.10	56	59	----
Wabuska Well #2 (Nev.)	8.3	1100	0.5	340	16.5	12.8	0.1	0.3	47.5	49.0	0.39	590	1.08	7.30	0.33	0.33	0.10	53	53	----
Steamboat Springs (Nev.)	8.5	1980	1.5	615	62.5	0.3	0.36	8.2	730	232	2.9	103	43.5	1.7	4.42	0.4	0.10	118	121	----
Geysers 5 & 6 (CA)	7.5	1210	1.1	0.25	0.05	0.35	0.03	----	13.5	199	----	138	456	0.2	0.9	0.83	122	0.4	0.5	0.003
Geysers 8 (CA)	7.6	575	0.8	0.25	0.05	1.38	0.065	----	1.0	116	----	122	232	0.22	1.5	1.2	66.2	0.32	0.32	----
Geysers 9 & 10 (CA)	7.0	164	0.7	0.25	0.05	1.85	0.03	----	1.0	16.2	----	33	52	0.38	0.46	5.6	14.5	0.56	0.56	----
Geysers 11 (CA)	7.6	400	0.6	0.5	0.05	1.2	0.03	----	1.0	176	----	78	106	0.12	0.68	0.72	77.5	0.47	0.47	----
Cerro Prieto Mexico (X)	NA	22600	6.0	6700	890	600	13	13.0	11700	NA	NA	6.4	17	0.5	NA	34.4	15.6	156	250	0.04
Cerro Prieto Mexico (Y)	7.0	77400	90	25600	4660	2000	234	21.0	44400	97	----	260	50	3.4	NA	1.6	0.1	60	60	0.04
Cerro Prieto Mexico (W)	5.2	660	2.3	5.0	1.0	3.1	0.028	0.01	8.9	20.1	----	470	0.93	----	NA	45.1	147	0.95	1.0	----

---- below detection limit
NA not analyzed

TABLE 2.8

SPECIFICATIONS FOR MONITORING SUBSURFACE VERTICAL DISPLACEMENTS

MEASUREMENT CAPABILITY / TYPE OF GEOTHERMAL RESOURCE	VAPOR-DOMINATED	LIQUID-DOMINATED	GEO-PRESSURED
MAXIMUM DEPTH OF MEASUREMENT	3 km (6 km)	3 km (6 km)	(6-7 km)
MAXIMUM TOTAL COMPACTION	0.3 m (0.6 m)	4 m (6 m)	(5-7 m)
DESIRED MAXIMUM VERTICAL INTERVAL BETWEEN MONITORING POINTS	30 m, increasing to 80 m outside reservoir	30 m, increasing to 80 m outside reservoir	(30 m, increasing to 80 m outside reservoir)
ACCURACY OF MEASUREMENT OVER FULL DEPTH OF INSTALLATION	±3 mm	±30 mm	(±30 mm)
ACCURACY OF MEASUREMENT OVER 30 M INTERVAL	±0.5 mm	±5 mm	(±5 mm)
MINIMUM FREQUENCY OF READINGS	weekly for 1st month; monthly for 1st year; then semi-annually	weekly for 1st month; monthly for 1st year; then semi-annually	(weekly for 1st month; monthly for 1st year; then semi-annually)
MONITORING PERIOD	15 yrs (50 yrs)	15 yrs (50 yrs)	(15 yrs)
ENVIRONMENTAL CAPABILITY / TYPE OF GEOTHERMAL RESOURCE	**VAPOR-DOMINATED**	**LIQUID-DOMINATED**	**GEO-PRESSURED**
TEMPERATURE	285°C (300°C)	300°C (375°C)	(375°C)
PRESSURE	35 kg/cm^2	300 kg/cm^2 (600 kg/cm^2)	(800-1,000 kg/cm^2)
SALINITY	0.01%	3% (20%)	(3%, increasing to up to 20% above reservoir)
DISSOLVED SOLIDS	0.2%	30%	(more than 30%)

Note: Long-term values in parentheses

TABLE 2.9

SPECIFICATIONS FOR MONITORING
SUBSURFACE HORIZONTAL DISPLACEMENTS

MEASUREMENT CAPABILITY \ TYPE OF GEOTHERMAL RESOURCE	All Cases
MAXIMUM ANGULAR ROTATION OVER DEPTH	1°
MAXIMUM LOCAL ANGULAR ROTATION	10 deg
ACCURACY OF ANGULAR ROTATION MEASUREMENT	40 sec
Note: depth, frequency, monitoring period and environmental capabilities same as Table 1.8	

TABLE 2.10

RELATION BETWEEN SUBSIDENCE PARAMETERS AND WELL CASING PROTRUSION

(Selected cases from Poland & Davis, 1969)

LOCATION	GEOLOGY	MAXIMUM SUBSIDENCE	TIME DURATION OF SUBSIDENCE	ANNUAL RATE	THICKNESS OF SUBSIDENCE ZONE	WELL CASING PROTRUSION
Wilmigton, Calif.	Sediments (Recent to Miocene) 6000 ft thick. Over basement schist (Pre-tertiary) Oil Production zone from 2500-6000 ft depth. Shales, siltstone, sands & sandstone.	8.1 m	1941-1962	0.3 to 0.6 m/yr	1050 m	No - Good bond with ground. Note: casing above subsidence zone in tension.
Lake Maracaibo, Venezuela	Oil produced from interbedded sands, hard clays, silts (Miocene)	3.3 m	1926-1954 continued after but at lower rate			No - casing failed at depth in production strata
Po Delta, Italy	1000 m (up to 2000 m) of relatively unconsolidated Quaternary deposits; marine, sandy, highly calcareous with some clay layers; contains at least five methane-bearing horizons.		1890-1950 1950-1956	1 - 3 mm/yr 0.3 mm/yr		Yes - 714 m deep well filled with concrete
Osaka, Japan	Ground water aquifers containing clay zones	0.3 to 0.6m 1.3m 2m	1885-1928 1928-1943 1942-1951	1.5-13mm/yr 70-120mm/yr	40-80 m some to 180 m depth	Yes - wells & buildings founded in rock have risen above ground surface.
Mexico City	Sand & Gravel w. interbeds of clayey silt (andesitic detrius) from 50-60m to 500m comprise groundwater aquifer; overlain by fine grained lake deposits; volcanic ash water-transported sediments	4 to 7.5 m	to 1959 1898-1938 1938-1948 1948-1952 1952-	 20 mm/yr 150 mm/yr 300-500mm/yr 250 mm/yr	mostly top 100 m	Protrusion of wells common
Las Vegas	Groundwater aquifer: alluvial deposits (late Tertiary & Quaternary confined by blue clay (lacustrine)	0.1 m 0.350 m 0.66 m	1935-1941 1935-1950 1935-1963			Protrusion as much as 1 m
Santa Clara Valley	Groundwater aquifer: unconsolidated alluvial & bay deposits (clay, silt, sand, gravel) (Pleistocene & recent) over semi-consolidated Santa Clara Formation over consolidated bedrock	1.2 m 1.5 m 3.3 m	1912-1933 1934-1960 1912-1963 1960-1963	 0.23 m/yr	300 m deep	Protrusion as much as 1 m

TABLE 2.11 CAPABILITIES OF EXISTING SUBSIDENCE MONITORING INSTRUMENTS

• VERTICAL DISPLACEMENTS •

PROPERTIES / INSTRUMENT	AVAILABILITY	OPERATING PRINCIPLE	DEPTH RANGE	RANGE OF VERTICAL DISPLACEMENT	MANUFACTURER'S SENSITIVITY	ACCURACY	MAXIMUM DOWNHOLE TEMPERATURE: RATED OR (ESTIMATED)	MAXIMUM DOWNHOLE PRESSURE: RATED OR (ESTIMATED)	MATERIAL COMPOSITION	OPERATION AND INSTALLATION (IMPORTANT FEATURES)	MAINTENANCE REQUIREMENTS & ESTIMATED SERVICE LIFE	SELECTED REFERENCES
WIRE-TYPE BOREHOLE EXTENSOMETER; weight-tensioned; weight-anchored; with rotary potentiometer or water-level recorder at surface (USGS compaction meter)	Sinco; user-fabricated (4)	Note (a) Measure vertical displacement between two markers at depth by comparing results of adjacent installations; access to borehole not necessary but wire must be free to move between borehole and transducer outside well. A straight hole (<1/2° inclination) is desirable to reduce friction. (3)	Maximum: 660m; Typical: up to 300m	Total: 25-50mm, resettable with water-level recorder; 2.7m maximum with rotary potentiometer;	±0.03mm	Total: 1 to 1.5mm (3) reported; Note: frictional drag at stress reversals may limit total length accuracy to ±3 to ±8 mm (5)	(500°C, (2) above which strength loss may become important); no provision for downhole temperature measurement	not applicable	wire usually stainless steel; may be plastic coated; typically 1/8 in. AISI 302 stranded aircraft cable	Movement between surface and anchor seen as rotation of pulley at surface; counter-weight at surface maintains constant tension on wire ideally, but friction of wire may affect tension (6)	Weight anchors may be lifted out of borehole to replace wire; Under severe geothermal conditions, pitting corrosion rate may be 0.15 mm/month so a 3 mm wire would be severed in 1-1/2 years. Note: Due to general corrosion, the wire may last 100 years, given a rate of 0.5g/m².day.	(1) Toliva, 1970 (2) Phillips and Sykes, 1970 (3) De Loos, 1973 (4) Lofgren, 1969 (5) Riley, 1969 (6) Bull and Miller, 1975 (7) Lofgren, 1961
WIRE-TYPE BOREHOLE EXTENSOMETER; weight-tensioned; with grout or mechanical anchor; dial gauge sensor at surface	Interfels; user-fabricated (1), (2)	as above	Typical: up to 100m	Total: 10-50mm resettable;	±0.5 to 1.0 mm	Total: 1.5 to 3mm estimated;	as above	not applicable	as above; wire may be cased in plastic tubing	Multiple wire installations possible, but may not be practical in deep holes; see note a; easy to reset range.	Anchor and wire system usually not removable; life under severe geothermal conditions may be 1-1/2 years.	(1) Waddell, 1964 (2) Sellers, 1969 (3) Cording et al, 1975
WIRE-TYPE BOREHOLE EXTENSOMETER; spring-tensioned; with grout or mechanical anchor; and dial gauge or micrometer sensor at surface	Terrametrics; Peter Smith; Serata	Wire stretched between anchor at depth and spring-loaded reference point at surface. Movement between surface and anchor seen as displacement of sensing rod contacting spring.	Maximum: 450m; Typical: 15-90m	Total: 90-150mm, some resettable; usually to a limit of 1m;	±0.03mm	Total: ±0.1mm to 2.5 mm reported; Under mining conditions, accuracy of single measurement reported to be ±0.2 to 3 mm, while survey accuracy tying in borehole collars was ± 6mm.	as above.	not applicable	as above	Multiple wire installations possible, but may not be practical in deep holes; see note a. Easy to reset range. Relatively rugged compared to electrical transducers. Stretch of wire due to change in spring tension added to read out value.	as above	(1) Potts, 1964 (2) Dunnicliff, 1970
WIRE-TYPE BOREHOLE EXTENSOMETER; cantilever tensioned; with grout or mechanical anchor; and cantilever-mounted electrical resistance strain gauge sensor at surface	Terrametrics	Wire stretched between anchor and cantilever spring at surface. Movement between surface and anchor causes bending of cantilever and resistance change in strain gauge.	Typical: 150m	Total: 15mm resettable;	±0.01mm	Total: ±0.5mm estimated;	as above	not applicable	as above	Multiple wire installations possible, but may not be practical in deep holes; see note a. Sensitive to moisture; zero drift can cause problems.	as above; except sensor may require recalibration or replacement at more frequent intervals.	(1) Sellers, 1969 (2) Dunnicliff, 1970
WIRE-TYPE BOREHOLE EXTENSOMETER; spring tensioned; mechanical or grout anchor; rotary potentiometer sensor at surface	Sinco	Wire stretched from anchor, over pulley (to which potentiometer coupled) to spring. Movement between surface and anchor seen as pulley rotation.	Typical: 100m assumed	Total: 50mm resettable;	±0.05mm	Total: ±1.5mm estimated;	as above	not applicable	as above	as above	as above	(1) Dunnicliff, 1970
WIRE-TYPE BOREHOLE EXTENSOMETER; cantilever-tensioned; mechanical or grout anchor; cantilever-mounted vibrating-wire strain gauge sensor at surface.	Telemac	Wire stretched between anchor and cantilever spring at surface. Movement between surface and anchor causes bending at cantilever and changes natural frequency of vibrating wire.	Typical: 100m	Total: 50mm	±0.01mm	Total: ±0.5mm estimated;	as above	not applicable	stainless steel wires	as above; but somewhat more resistant to environmental problems	as above	(1) Dunnicliff, 1970
ROD TYPE BOREHOLE EXTENSOMETER, with mechanical or grout anchor; with dial gauge or micrometer sensor	Irad; Interfels; Terrametrics; Huggenberger; Soil Instruments	Movement between anchor and surface appears as translation of top of rod relative to surface; Displacement of top of rod detected by sensor	Maximum: 500m; Typical: 30 - 180 m	Total: 10-50 mm resettable; Add rod lengths as required in extension; in compression, can cut rods as needed;	± 0.01 mm to ± 0.03 mm	Total: ± 0.2 mm to ± 0.6 mm estimated;	as above	not applicable	Rods generally stainless steel; occasionally aluminum. May be plastic coated or cased in plastic tube. Anchor usually cadmium plated mild steel, cast iron. Rod is typically small diameter 6 mm solid rod - 17 mm pipe;	Note C: Access to borehole not required; but top of rod must be free to move between borehole and transducer. Rod installed in flexible tube if hole unstable and requires grouting. A straight hole (1/2° inclination) is desirable to reduce friction. If multiple installation not practical for deep hole, measure vertical displacement between 2 markers at depth by comparing results of adjacent installations.	Typical rod (pipe) wall thickness is 3 mm. Based on pitting corrosion rate of 0.15 mm/mo(1). The service life would be about 1-1/2 years. If some pinholes can be tolerated, service life may be as long as 100 yrs., based on a general corrosion rate of 0.5g/m².day.(1)	(1) Toliva, 1970 (2) Cording, et al., 1975 (3) Seller, 1969
ROD-TYPE BOREHOLE EXTENSOMETER, with mechanical or grout anchor; with linear potentiometer sensor	Interfels; Sinco; Irad; Soil Instruments	as above	Typical: 30m to 180 m.	Total: 10 - 150 mm	±0.01 mm to 0.1 mm	Total: ± 0.2 to ± 2 mm, estimated;	as above	not applicable	as above	as above	as above; wiper-contacts of potenhometer may degrade and wear and require replacement or recalibration within 1 year.	
ROD-TYPE BOREHOLE EXTENSOMETER, with mechanical or grout anchor; with LVDT sensor	Interfels	as above	Typical: 30 m to 180 m.	Total: 12 mm, resettable;	± .01 mm to ± 0.1 mm	Total: ± 0.2 to + 2 mm estimated;	as above	not applicable	as above	as above	as above; except service life of LVDT should be somewhat longer than for potentiometer if adequately sealed.	
ROD-TYPE BOREHOLE EXTENSOMETER; with mechanical or grout anchor; with vibrating wire strain gauge sensor	Maihak	as above	Typical: 30 m to 180 m. estimated.	Total: 6 to 100 mm;	± .003 mm to ± .03 mm	Total: ± 0.05 to ± 1.25 mm reported; but friction may make + 0.05 mm unrealistic;	as above	not applicable	as above	as above	as above; except service life of vibrating wire strain gauge should be several years.	

INSTRUMENT \ PROPERTIES	AVAILABILITY	OPERATING PRINCIPLE	DEPTH RANGE	RANGE OF VERTICAL DISPLACEMENT	MANUFACTURER'S SENSITIVITY	ACCURACY	MAXIMUM DOWNHOLE TEMPERATURE: RATED OR (ESTIMATED)	MAXIMUM DOWNHOLE PRESSURE: RATED OR (ESTIMATED)	MATERIAL COMPOSITION	OPERATION AND INSTALLATION (IMPORTANT FEATURES)	MAINTENANCE REQUIREMENTS & ESTIMATED SERVICE LIFE	SELECTED REFERENCES
ROD-TYPE BOREHOLE EXTENSOMETER, with mechanical or grout anchor; attached wire at surface with scale readout	User Fabricated (1)	Movement between surface and anchor seen as translation of top of rod relative to surface; wire attached to rod goes over pulley and is tensioned by a weight. Elevation of wt or rotation of pulley also are measurements of displacement.	Typical: 100 m.	1 m.	± 2.5 mm.	Total: ± 15 mm estimated	as above	not applicable	as above	as above	as above	(1) Howell, Wright and Dearinger, 1976;
ROD-TYPE BOREHOLE EXTENSOMETER, with two concentric rods; mechanical anchors; and dial gauge readout (DOUBLE-POINT BOREHOLE EXTENSOMETER)	Irad; Terrametrics	Inner rod anchored at base of borehole. Outer rod extends only partway down the hole and is anchored. Movement between surface and other anchor seen as translation of top of appropriate rod relative to surface; position of inner or outer rod relative to fixed measuring surface read with dial gauge.	Maximum: 15 m.	Total: 100 - 300 mm Can be increased in extension with extension rods by 600 mm;	± 0.01 mm	Total: ± 0.5 mm estimated	as above	not applicable	Outer rod: galvanized steel (Irad); probably 15 mm Ø; Inner rod: stainless steel;	See note (c); Hole can be grouted if extensometer tools placed in protective tubes; not for use in cased hole.	Probably not recoverable for replacement. Corrosion resistance will be higher for all stainless steel assembly; removal of galvanized coating will be rapid; sealing may impede movement between concentric pipes. Service life probably less than 1 year due to corrosion of outer rod and due to scaling.	
PIPE-TYPE BOREHOLE EXTENSOMETER, anchored by own weight, attached wire at surface with water level recorded readout	User Fabricated (1), (2), (3)	Movement between surface and anchor seen as translation of top of pipe relative to surface; wire attached to pipe goes over pulley and is tensioned by a weight. Elevation of weight or rotation of pulley are also measurements of displacement.	Maximum: (3) 1200 m; Typical: 300 - 600 m	Total: 25 - 50 mm. resettable;	± 0.01 mm to ± 0.03 mm	Total: 0.2 to 0.6 estimated	as above	not applicable	Cast iron (3); low alloy steel possible; pipe typically 50 mm to 100 mm diameter.	Pipe usually installed in metal cased hole, often abandoned well; pipe usually founded ~ 5 to 10 m below base of casing. See note (c).	Pipe stands on shoe; can probably be removed for replacement, but with difficulty. Typical wall thickness for pipe cited is 4 mm; for a general corrosion rate of 8 g/m·d (4); it would last a maximum if 10 years in a severe geothermal environment.	(1) Fulcher, 1977 (2) Komaki, 1969 (3) Hirono, 1969 (4) Toliva, 1970
MULTIPLE BASE LENGTH EXTENSOMETER, with inductance sensors, mechanical metal anchors	Telemac	Central rod, able to move freely in hole, contains inductance-type sensors. When rod moves relative to concentric anchors, inductance sensors detect relative position of each anchor.	50 m estimated; Maximum of 1 sensor per meter.	Maximum: 125 mm	0.01 mm	Total and Interval: 0.02 mm claimed;	50°C	(500 kN/m^2 estimated)	Probably stainless steel	Access to hole not necessary, but instrumented rod must be free to displace toward surface. Will not work in metal casing; probably o.k. if anchors installed outside flexible plastic casing.	Central rod containing electronics has no mechanical coupling to anchors, so probably could be replaced. Under geothermal conditions, central rod and electronics housing may suffer pitting corrosion. Electronics as designed not suitable for geothermal environment; Life in non-geothermal environment probably 1 yr, longer if rod replaced.	
MULTIPLE BASE LENGTH EXTENSOMETER, with reed switch sensors; and magnet markers.	User Fabricated (1, 2, 4)	Permanent, movable central rod contains reed switches, at approximately same spacing as magnets anchored outside borehole casing. Reed switches may be paired or single. Rod installed so initially each reed switch approximately opposite a magnet. Movement of measuring rod needed to align reed switch with its corresponding magnet measured with a micrometer. Can replace rods with tape for easier handling.	30 - 70 m	Total: 150 - 250 mm Intervals: 150 - 250 mm	± 0.02 mm to ± 0.1 mm	± 0.1 mm (1) reported with rods ± 0.15 mm (2) with tape	(50°C estimated; possibly higher since reed switches can operate to 200 C.)	(700 KN/m^2 estimated based on depth range)	Rod: thin-walled stainless steel tube with precision ball connectors. Tape: stainless steel. Brass housing for reed switches.	Access to hole not necessary, but instrument must be free to displace toward surface. May be slightly influenced by steel casing and accuracy reduced due to distortion of magnetic field.	Central rod can be withdrawn or replaced but with loss of accuracy. Stainless steel tape or tube would become severely pitted in 1½ years of service, based on pitting corrosion rate of 0.15 mm/month.(3) Electronics as designed not suitable for geothermal environment. Brass housing not suitable for geothermal environment. Life probably 1 yr under non-geothermal conditions; longer if rod replaced.	(2) Smith and Burland, 1976 (1) Burland, Moore and Smith, 1972 (3) Toliva, 1970 (4) Burland and Moore, 1973

TABLE 2.11 CAPABILITIES OF EXISTING SUBSIDENCE MONITORING INSTRUMENTS • VERTICAL DISPLACEMENTS •

PROPERTIES / INSTRUMENT	AVAILABILITY	OPERATING PRINCIPLE	DEPTH RANGE	RANGE OF VERTICAL DISPLACEMENT	MANUFACTURER'S SENSITIVITY	ACCURACY	MAXIMUM DOWNHOLE TEMPERATURE: RATED OR (ESTIMATED)	MAXIMUM DOWNHOLE PRESSURE: RATED OR (ESTIMATED)	MATERIAL COMPOSITION	OPERATION AND INSTALLATION (IMPORTANT FEATURES)	MAINTENANCE REQUIREMENTS & ESTIMATED SERVICE LIFE	SELECTED REFERENCES
CHAIN TYPE EXTENSOMETER, mechanical or grout anchor, with linear potentiometer or LVDT sensor.	Soil Instruments; Interfels	Device consists of a linear sensor housing in a steel case, and fixed to a concrete anchor or anchor plate. A moveable rod extends from the sensor case at 2nd anchor, 1 m or more away. Movement between anchored sensor case and 2nd anchor detected by sensor. Extensometers can be coupled by using 2nd anchor of 1st extensometer to anchor sensor case of next extensometer.	Typical: 60 - 100 m, but lead wire could extend several hundred m. from last sensor to readout.	Maximum: 10 mm to 300 mm per sensor.	± 0.1 mm to ± 1.0 mm	Interval: ± 2 to 5 mm estimated. Total: Assuming 10 sensors @ 10 ft centers, ± 7 to ± 16 mm estimated.	(0 - 50°C, estimated)	(1000 kN/m² estimated)	Probably stainless steel	Generally used in dams or fills. Requires well compacted fill or soft grout around anchors and no casing in hole. Rods may be protected by flexible plastic casing. Only lead wires exit at surface; no access to borehole necessary.	Cannot be repaired or replaced. Life limited by sensors; LVDT probably more reliable than linear potentiometer. Life probably 1 year under non-geothermal conditions.	
SONDE-TYPE EXTENSOMETER, with induction sensor and metal markers.	Telemac; Maihak; Terrametrics; Sinco; Soil Instruments	Probe lowered down hole on cable; when it passes anchored metal marker, current change induced in 2ndary coil and detected at surface. Depth of marker is length of cable played out.	Typical: 75 m to 100 m; Maximum: 300 m	Ideally unlimited; but depends on casing; up to ≈ 17% strain possible, based on typical elastic compressibility of casing.	± 0.1 mm to ± 1.5 mm	Interval: 1.25 to 5 mm reported; Total: 5 to 10 mm estimated	up to 110°C	(3000 kN/m² estimated, based on depth range)	Casing usually plastic. Metal markers may be any common metal. Instrument housing stainless steel	Best when hole within 3° of vertical. Markers anchored outside flexible plastic casing. Access to hole required. Not for use in metal casing.	If probe can be modified to take geothermal conditions, will be easy to maintain since removed between readings.	
SONDE-TYPE EXTENSOMETER, with 2 or 3 induction sensors; and "casing collars" as markers. (CASING COLLAR LOCATOR)	Provided as a service only; by Dresser-Atlas, Schlumberger, and others.	Sonde consists of two or 3 probes rigidly connected in series. Works like above sonde, but senses change in metal thickness at collars; distance between adjacent markers determined by cable played out between probe detection upper marker (collar) and lower probe detecting lower marker (collar). Depth of probe also determined by wheel on tool which tracks against edge of casing. Wheel has several attached magnets, and each partial rotation of wheel detected by reed switch in tool. With triple sensor data can be calibrated in-situ using known distance between 1 pair of sensors.	Maximum: 1500 m	Ideally unlimited; but depends on compressibility of metal casing and casing/ground bond.	± 3 mm(4) improved to about ± 0.1 mm at Gronigen(2)	Interval: ± 15 mm reported (1) for double; ± 3.5 mm for triple (2) Total: ± 0.05 m(2)	Probably up to 120°C; typical for production logging tools.) At Gronigen(2), induction sensors connected by invar mandrel to minimize temperature effect.	(Probably 70,000 kN/m² maximum typical for production logging tools.)	Instrument housing stainless steel. Casing: low-alloy steel, standard oil-well casing.	Operates in cased hole. Accessible hole required. Works best in holes where casing collar has a recess to provide sharp signal(2).	as above	(1) Allen, 1960 (2) deLoos, 1973 (3) Allen, 1971 (4) Allen, 1968
SONDE-TYPE EXTENSOMETER, with reed switch sensor (lowered on cable) and magnet markers.	Soil Instruments; Terra Technology; ELE	Probe lowered down hole on cable. When it passes anchored magnetic marker, reed switch closes and detected at surface. Depth of marker is length of cable played out, and is measured with steel tape.	Typical: 100 m	Ideally unlimited, but depends on casing. Up to 17% strain possible.	± 1 - 2 mm (1)	Interval: 1 - 2 mm reported (1); Total: ± 2.5 mm reported for 30 m; ± 5 mm estimated for 100 m. Accuracy limited by steel tape.	(Probably up to 120°C as above; Reed switches can tolerate up to 200°C.)	(1000 kN/m² estimated; based on depth range.)	Probe in brass or stainless steel housing. Magnet probably Alnico. May be coated with epoxy (1)	Operates in hole cased with non-magnetic casing; Accessible hole required; Magnets anchored to ground outside casing or attached to flexible casing cemented to ground. Magnets may also be pneumatically forced into ground.	as above	(1) Burland, Moore and Smith, 1972 (2) Marsland and Quarterman, 1974
SONDE-TYPE EXTENSOMETER, with two reed switch sensors and magnet markers (lowered on rods).	Soil instruments.	Probe lowered down hole on coupled rods. Probe consists of two reed switches spaced 0.5-1.0 m apart; magnets also spaced at this depth. Depth of any marker determined by rod used to lower probe. Distance between adjacent markers determined by rod movement between upper reed switch detecting upper magnet lower reed switch detecting lower magnet. Incremental rod travel measured with micrometer.	30 m estimated	Total: as above Interval: 150 - 250 mm	± 0.05 mm	± 2 mm estimated; ± 0.1 mm claimed by mfg.	(50°C estimated)	(300 kN/m² estimated based on depth)	Stainless steel rods; stainless steel housing.	As above; requires hole with minimal curvature since not very flexible.	as above	
SONDE-TYPE EXTENSOMETER, with radioactive bullet markers and 2 or 3 gamma-ray detectors (GAMMA-RAY LOGGER)	Provided as a service only; by Dresser-Atlas, Schlumberger and others.	Sonde consists of 2 or 3 probes (usually rigidly) connected in series. Signal sent to surface when x-ray detector locates bullet. Depth determined by amount of cable played out and by rotation of tracking wheel-(see casing-collar locator). Distance between adjacent markers determined by amount of cable played out between upper probe detection of upper bullet and lower probe detection of lower bullet. With 3 detectors, can use 1 pair for in-situ calibration.	1500 m	Unlimited because bullets outside casing in formation.	± 0.1 mm	Depends on logging rate; works best at slow rate (1.5m/min(1) or less(4)). Accuracy probably higher than for casing collar locator once strain exceeds elastic limit of casing; Interval: ± 30 mm error in 2-detector tool(2) can be reduced to ± 3 mm error in 3-detector tool(1); Total: ± 10 to 20mm(1)	(200°C estimated; typical for γ-ray logging tools) Tool cooled with dry ice (3).	(140,000 kN/m²; typical for γ-ray logging tools)	Bullets are 10 μ Curie Cesium 137(1) at Gronigen and 1.6 μ Curie in Japan(4) Invar housing(1)	Operates in cased, open hole; since bullets are shot into formation with perforating gun, best to install them before casing. Otherwise, to prevent leakage, only the production zone can be marked. May be impossible to place bullets in hard formations such as anhydrite and dolomite.(1) Can install free-hanging casing length inside completed borehole with R/A bullets welded at known intervals to use as in-situ calibration for tool. In Japan, welded buttons to production casing to get compaction of casing as well as ground (4).	If tool can be modified to meet geothermal environment, should be easy to maintain since portable. Some problem may arise if RA bullets are disloged or diffuse into formation.	(1) deLoos 1973 (2) Allen, 1969 (3) Allen, 1977 (4) Sano, 1969 (5) Allen, 1971
SONDE-TYPE EXTENSOMETER, with latching pawls to detect casing collars	Soiltest; Sinco; Soil Instruments; Geotesting	When probe lowered down through small diam. coupling into larger diameter casing, pawls will lock if pulled upward against smaller x-section. Depth measured on graduated tape at these x-sections.	Typical: 100 m	Total and Interval: 3-6% vertical strain; limited to allowable movement per coupling.	± 1 to ± 3 mm	Interval: ± 10 mm estimated; Total: ± 40 mm estimated. Best in hole within 25° of vertical.	(50°C estimated)	(1000 kN/m² estimated; but should operate if some leakage occurs.)	Chrome/brass or galvanized steel housing	Requires cased hole with telescoping tubing and collars which have a different I.D. from casing. Latching mechanism released when probe hits hole bottom, allowing withdrawal. Requires applied upward force at regular intervals to detect collars.	Tool has moving mechanical parts; although portable, may be difficult to modify for geothermal conditions.	

TABLE 2.11 CAPABILITIES OF EXISTING SUBSIDENCE MONITORING INSTRUMENTS

• HORIZONTAL DISPLACEMENTS •

PROPERTIES / INSTRUMENT	AVAILABILITY	OPERATING PRINCIPLE	DEPTH RANGE	RANGE OF ANGULAR DISPLACEMENT	MANUFACTURER'S SENSITIVITY	ACCURACY	MAXIMUM DOWNHOLE TEMPERATURE: RATED OR (ESTIMATED)	MAXIMUM DOWNHOLE PRESSURE: RATED OR (ESTIMATED)	MATERIAL COMPOSITION	OPERATION AND INSTALLATION (IMPORTANT FEATURES)	MAINTENANCE REQUIREMENTS & ESTIMATED SERVICE LIFE	SELECTED REFERENCES
SONDE-TYPE BOREHOLE INCLINOMETER; with pendulum and LVDT sensor	Galileo; Dames and Moore	As probe inclines, pendulum remains vertical. The LVDT measures the displacement of the bottom of the pendulum relative to the instrument case. Depth determined by amount of cable played out at measuring point.	300 m estimated	12^{deg}	± 1 min	± 10 min estimated	($50^{o}C$, estimated based on typical electronics)	(3000 KN/cm^2, estimated based on depth)	Probably stainless steel housing; casing usually grooved, PVC.	To get orientation, must install in grooved or square casing, survey initially for spiral; for best results, casing should be telescoping if cemented or keyed to surrounding ground. Casing may be inserted inside flexible grouted casing. Take readings at intervals corresponding to tool length.	Probe temporary; if it can be modified to meet geothermal conditions, it should be easily maintained. Scaling and distortion of casing grooves may limit life. Casing materials now used not suitable for geothermal environment.	
SONDE-TYPE BOREHOLE INCLINOMETER; with pendulum and linear potentiometer sensor	Sinco	As probe inclines, pendulum remains vertical. Pendulum contacts resistance element fixed to case. Resistance varies with angle between pendulum and instrument case. Depth determined by amount of cable played out at measuring point.	300 m	12^{deg} - 25^{deg}	± 3 min	± 20 min estimated	(as above)	1400 KN/m^2	Probe has brass housing; casing usually aluminum or plastic.	as above	as above	Wilson, 1962
SONDE-TYPE BOREHOLE INCLINOMETER: with pendulum and servo-accelerometer	Terra-Technology; Geo-Testing; Sinco	As probe inclines, pendulum remains vertical. This system measures force required to return pendulum to initial alignment in probe. Depth determined by amount of cable played out at measuring point.	300 m	Typical: 25^{deg} 45 - 90^{deg} available	± 10 sec	± 1 min reported (1)	Typical: $50^{o}C$, up to $90^{o}C$ available.	Typical: 3500 KN/m^2 Up to 140,000 KN/m^2 available	Probe has stainless steel housing; wheels may be aluminum, stainless steel or hard plastic; cable cased in polyurethane or neoprene.	as above	as above	(1) Bromwell, Ryan and Toth, 1971
SONDE-TYPE BOREHOLE INCLINOMETER; with pendulum and air pressure device	TerraTec, developmental	As above, except: Tilt measured by pneumatic force (air pressure) required to return pendulum to original alignment in probe.	100 m estimated		± 35 sec	± 3 deg estimated	($50^{o}C$ estimated)	(1000 kN/m^2 estimated)	Probably stainless steel housing.	as above	as above	Dunnicliff, 1970
SONDE-TYPE BOREHOLE INCLINOMETER; with cantilevered pendulum and vibrating wire strain gauges	Maihak; Telemac; Geonor; ELE	Cantilever with weight at unsupported end bends as probe tilts. Bending of cantilever measured by vibrating wire strain gauge. Depth determined by amount of cable played out at measuring point.	300 m estimated	Typical: 6 - 30 deg	± 30 sec - ± 2 min	± 3 to 4 min reported	($50^{o}C$, estimated based on typical electronics)	(3000 KN/cm^2, estimated based on depth)	Probably stainless steel housing. Casing usually grooved, PVC.	as above	as above	
SONDE-TYPE BOREHOLE INCLINOMETER; with cantilevered pendulum and bonded electrical resistance strain gauges.	Soil Instruments; Soiltest	Cantilever with weight at unsupported end bends as probe tilts. Bending of cantilever measured by electrical resistance strain gauges. Depth determined by amount of cable played out at measuring point.	200 m	5 deg to 30 deg	± 15 sec to ± 40 sec	± 1 min(1) reported for shallow depths	(as above)	(2000 KN/cm^2, estimated based on depth)	Chrome plated brass or stainless steel housing; neoprene sheathed cable, stainless steel wheels.	as above	as above	(1) Kallstenius and Bergau, 1961
SONDE-TYPE BOREHOLE INCLINOMETER; with pendulum, compass and camera	Sperry Sun; Schlumberger	As probe inclines, pendulum remains vertical. Camera photographs pendulum position relative to compass fixed to case. Depth determined by amount of cable played out at measuring point.	Deep holes, more than 6 km	2° to 130° available			Maximum: $315^{o}C$ for 5 hrs; with special insulation; Typical: $175^{o}C$	140,000 kN/m^2	Probably stainless steel housing.	Instrument determines both orientation and tilt; camera operated by timer; accuracy of depth measurement associated with angle measurement will be low unless used as single-shot device.	Probe temporary; if can be modified to meet geothermal conditions, should be easily maintained.	
SONDE-TYPE BOREHOLE INCLINOMETER; pendulum, linear potentiometer, compass and rotary motor	Eastman	For compass orientation, rotary motor rotates mirror until indicator facing north. For angle from vertical as probe tilts, pendulum remains vertical. Pendulum contacts resistor fixed to case. Resistance varies with angle between pendulum and instrument case.	450 m - 540 m	more than 30°; can be used at any angle	1° for tilt; 2° for orientation		($50^{o}C$ estimated)	6300 KN/m^2	Chromium plated bronze case.	Determines inclination and orientation; device also contains TV camera.	as above	
SONDE-TYPE BOREHOLE INCLINOMETER; with gyro-compass camera, and pendulum	Service tool only; by Sperry Sun, Schlumberger	As probe inclines, pendulum remains vertical. Camera photographs pendulum position relative to gyro-compass, fixed to case.	6.2 km reported; maximum range probably 9 km	2° to 90°		± 15 min tilt; 1^{deg} to 3^{deg} orientation	$190^{o}C$ reported, with thermal shield for up to 11½ hr.	(12,000 KN/m^2 estimated, based on depth and muds reported.)	Housing K-Monel	Determines inclination and orientation.	as above	Oil and Gas Jnl, 1971
SONDE-TYPE BOREHOLE INCLINOMETER; with needle-pointed pendulum and punchable chart	Totco	As probe inclines pendulum remains vertical. At pre-set time point of pendulum punches chart fixed to probe, giving inclination of probe. Depth determined by amount of wire-line played out.	6 - 10 km estimated	7,14, 21 deg	8 min	15 min estimated	special models available for warm (<$150^{o}C$) and hot (<$300^{o}C$ estimated) holes	(100,000 KN/m^2 estimated, based on depth)	Probably stainless steel housing	Make reading at one depth only - gives tiltonly - not orientation. Must be retrieved to determine tilt. Tilt simply determined by examining chart with magnifying glass, will operate in any type of hole-cased or uncased.	as above	
FIXED BOREHOLE DEFLECTOMETER with cantiever mounted electrical resistance strain gauge sensors	Terrametrics	Steel tubes anchored in hole and connected to adjacent tubes by cantilever. Angular movement between two tubes causes cantilever to bend. Bending sensed by strain gauges.	54 m with 6 m intervals between cantilevers.		± 3 sec	± 20 sec	$50^{o}C$	(540 KN/m^2 estimated, based on depth)	Tubes are stainless steel	Designed for use in uncased hole but could be installed in flexible casing. Orientation must be determined when installed.	Permanent; may be impossible to recover or repair; electronics will require modification for geothermal environment; stainless steel housing may leak after several years service, due to pitting corrosion.	
FIXED BOREHOLE DEFLECTOMETER with inductive sensor	Interfels	Steel tubes anchored in hole and connected by tensioned wire. Position of wire changes as angular movement between tubes occur. Movement detected by inductive sensors.	54 m with up to 8 measuring elements	35 min/element; resettable	± 2 to ± 20 sec	± 1 to 3 min estimated	($50^{o}C$ estimated)	(540 KN/m^2 estimated, based on depth)	Probably stainless steel housing.	as above	as above	
FIXED BOREHOLE INCLINOMETER with pendulum, electrical contacts and micrometer	SGI	Pendulum remains vertical as probe tilts. When tilt exceeds a preset value, pendulum has swung far enough to touch electrical contact and complete circuit. Micrometer can be turned from surface to deflect pendulum to determine angle.	10 m estimated	0 - 1 deg. to several degrees(1)	± 6 min to ± 7 sec	± 3 deg estimated	($50^{o}C$ estimated)	(100 KN/m^2 estimated, based on depth)	Probably stainless steel housing.	Install in flexible tube. Determine orientation when instrument installed. Requires mechanical connection between surface and instrument.	As above; probably not suitable for geothermal environment.	(1) Kallstenius and Bergau, 1961

Table 2.12- PROMISING INSTRUMENTS FOR GEOTHERMAL SUBSIDENCE MONITORING

INSTRUMENT	Measures Vertical Displacement	Measures Horizontal Displacement	DESCRIPTION OF INSTRUMENT[1]
• Pipe Type Borehole Extensometer - Anchored by Own Weight, Attached Wire at Surface with water level recorder readout.	✓		A pipe inside a cased borehole is permanently anchored at the base of the borehole and extends to the surface. The movement of the bottom of the borehole relative to the surface is directly determined from the movement of the top of the pipe relative to a surface benchmark.
• Sonde-Type Borehole Extensometer - With 2 or 3 Induction Sensors and "Casing Collars" as markers.	✓		A probe containing electronic sensors is lowered down a borehole. It detects permanent markers placed at regular intervals along the borehole. The markers may be magnets, casing collars or radioactive bullets. The distance between markers may be determined by the amount of cable played out or by calibration of the strip chart record using the known spacing between probe sensors if 3 or more sensors are used. The probe is retrieved after the hole is surveyed.
• Sonde-Type Borehole Extensometer with 2 or 3 Gamma-Ray Detectors and Radioactive Bullet Markers.	✓		
• Sonde-Type Borehole Extensometer with Reed Switch Sensor (lowered on cable) and Magnet Markers.	✓		
• Sonde-Type Borehole Inclinometer with Pendulum and Servoaccelerometer		✓	A probe containing a electronic or mechanical sensor, whose signal is proportional to the tilt of the probe, is lowered down a borehole. The sensor may be a servoaccelerometer, a strain-gauged cantilevered pendulum or a pendulum whose movement is recorded by a camera or punchable chart. The depth of the probe is the length of cable played out. Horizontal deflections are calculated from the continuous tilt profile with depth. The probe is retrieved after the hole is surveyed.
• Sonde-Type Borehole Inclinometer with Cantilevered Pendulum and Vibrating Wire Strain Gauges		✓	
• Sonde-Type Borehole Inclinometer with Pendulum, Compass and Camera		✓	
• Sonde-Type Borehole Inclinometer with Pendulum and Punchable Chart		✓	
• Sonde-Type Borehole Inclinometer with Pendulum, Gyrocompass and Camera		✓	
• Fixed Borehole Deflectometer with Cantilever Mounted Electrical Resistance Strain Gauge Sensors		✓	A permanent instrument consisting of two tubes, hinged by 2 strain-gauged cantilevers at the junction. Angular movement between the two tubes bends the cantilever. The strain in the cantilever is measured electronically from the surface. Horizontal deflections are calculated from the continuous tilt profile provided by a series of these devices.

[1] Note: Refer to Interim Report #1 for more information on these instruments

TABLE 2.13

INSULATION SUITABLE FOR GEOTHERMAL TEMPERATURES
(Malloy, 1969; Barron, 1966)

	Insulation	Range of k at 93°C (W/m°C)	Range of k at 315°C (W/m°C)	Comments
CONVENTIONAL INSULATION	Asbestos Fibers	0.047-0.064	0.073-0.095	With binders; without binders, but woven, etc.
	Calcium Silicate	0.047-0.065	0.073-0.088	
	Diatomaceous Silica	0.046-0.224	0.068-0.118	With binders and loose
	Cellular Glass	0.060	0.109	
	Glass Fibers	0.036-0.076	0.059	With binders; without binders but woven, etc.
	Magnesium Carbonate	0.050-0.065		With asbestos filler
	Mineral Fiber	0.037-0.068	0.065-0.097	With binders; without binders but woven, etc; loose
	Expanded Perlite	0.045-0.051	0.077	With binder, loose
	Silica (and Alumina) Fibers		0.051-0.087	Woven and other without binders; loose
VACUUM INSULATION	Cylindrical Dewar	0.0073 between 100°C and 300°C (calculated)		Two concentric cylinders; space between evacuated to 10^{-4}mm Hg; 100mmϕ, 1m long external dimensions; 12.5mm gap between concentric cylinders
	Multilayer Vacuum Insulation	0.0004 between 100°C and 300°C (calculated)		Aluminum foil at 2 layers/mm; fiberglass spacer material; 10^{-4}mm Hg pressure between foil layers.

Note: Binders are inorganic and organic materials used to hold fibrous and granular insulation together.

TABLE 2.14 THERMAL EXPANSION CHARACTERISTICS OF SELECTED MATERIALS

Material	Coefficient of Expansion at 20°C (mm/mm/°C)
Aluminum	$20\text{-}22 \times 10^{-6}$
Low Carbon Steel	$11\text{-}12 \times 10^{-6}$
Invar	1.4×10^{-6}
Copper	16×10^{-6}
Concrete	13×10^{-6}
Vulcanized Rubber	81×10^{-6}
Nylon	99×10^{-6}
Glass (Silica)	0.5×10^{-6}
Calcite	-6×10^{-6} one axis; 25×10^{-6} other axis

(after Van Vlack, 1964; INCO, 1968)

Alloy Name	% Nickel	Average α_L For Temperature Range	Range of Temperatures Over Which α_L Nearly Constant
Invar	36	$1.4\text{-}1.6 \times 10^{-6}$ mm/mm°C	-70°C to 120°C
42-Nickel Iron Alloy	40-42	$4.8\text{-}5.6 \times 10^{-6}$ mm/mm°C	40°C to 230°C
49-Nickel Iron Alloy	47-50	$9.1\text{-}9.9 \times 10^{-6}$ mm/mm°C	0°C to ~ 400°C
Carbon Steel	0	12.8×10^{-6} mm/mm°C	gradually increases over range 0 to 300°C

(Carpenter Steel Co., 1977; Inco, 1949)

TABLE 2.15 - EFFECT OF TEMPERATURE ON ELASTIC MODULUS AND ELECTRICAL RESISTANCE

(a) ELASTIC MODULUS

The change in the modulus of elasticity due to temperature change is given by: $\Delta E = \alpha_M \cdot E \cdot \Delta T$

where
E = Modulus of Elasticity
α_M = Thermal Coefficient of Modulus
ΔT = Temperature Change

Typical values of the thermal coefficient of modulus α_M are given below.

Material	α_M (0-150°C)
Controlled Modulus Alloy (Iso-elastic, Elinvar, Ni-Span-C)	-36 to 27×10^{-6}/°C
Spring Steel	-342×10^{-6}/°C
Type 316 Stainless Steel	-400×10^{-6}/°C

(Inco, 1963; John Chatillon & Sons, 1978)

Note:

The controlled modulus alloys have a relatively small and constant thermal coefficient of modulus to 150°C (Inco, 1949). Age-hardening increases the temperature range (Inco, 1949), but data on the value of α_M above 150°C are not readily available.

(b) ELECTRICAL RESISTANCE

The change in electrical resistance due to temperature is given by: $\Delta R = \alpha_R \cdot \Delta T \cdot R$

where
R = Electrical Resistance
α_R = Thermal Coefficient of Resistance
ΔT = Temperature Change

Typical values of the thermal coefficient of electrical resistance α_R are given below.

Conductor	α_R ($\Delta\Omega/\Omega$-°C near 20°C)
Aluminum	0.004
Carbon	-0.0003
Constantan (55% Cu; 45% Ni)	~0 (average)
Copper	0.004
Manganin (84% Cu; 12% Mn, 4% Ni)	~0 (average)
Evanohm (74% Ni; 20% Cr; 3% Al; 3% Fe)	~0 (average) (to 250°C)

(Grob, 1977; Inco, 1968)

TABLE 2.16

TEMPERATURE LIMITS OF MECHANICAL SEALS

Temperature limits of common seals are:

Neoprene	135°C
Viton	190°C
PTFE	245°C
Asbestos	345°C
Nitinol with Composites	400°C
Grafoil	400°C
Metal to Metal	480°C

(Griffith, 1978; Baker, et al, 1975b)

TABLE 2.17

SOME RECOMMENDED MATERIALS AND TECHNIQUES FOR GEOTHERMAL INSTRUMENTATION

ITEM NO.	MATERIAL OR TECHNIQUE	APPLICATION
1	AL-6X or Type 316, Stainless Steel	To construct instrument housing for temporary probes.
2	Hastelloy-C or Inconel 625, Nickel Alloys	To construct instrument housing for permanent downhole instruments.
3	Cathodic Protection with impressed current	To protect well casings used as part of subsidence-monitoring system; to protect permanent downhole instruments.
4	Chromium/Nickel or Aluminum Coatings	To extend life of metal parts exposed to well environment; use only with recognition of implications of coating falure
5	Inhibitors for pH control and oxygen removal; film-forming amine inhibitors	To reduce the rate of corrosion due to well fluids of of well casing and permanent downhole instruments.
6	Design to minimize effect of scaling on instrument	To prevent probable build-up of calcite and silica scale from rendering instrument inoperable.
7	Multi-layer foil vacuum insulation	To reduce heat flow into instrument capsule. Use inside pressure-resistant housing.
8	Thermoelectric cooling or "special" mechanical heat pump cooling	To remove heat from instrument capsule to maintain temperature at 100°C for a minimum of 72 hours; this allows for slow accurate logging with available electronics.
9	40-50% Nickel/Iron Alloy	To construct internal instrument parts to reduce temperature effect on length.
10	Temperature-Invariant Reference Bar	To support internal instrument parts to reduce temperature effect on length.
11	Isoelastic, N-Span-C, Elinvar	To construct springs, cantilevers and tensioned members to reduce temperature effect on elastic properties and to reduce inelastic behavior at high temperature.
12	Evanohm, controlled resistance alloys	To construct precision resistors to minimize reversible electrical resistance change with temperature.
13	Use of two strain gauges-one strained and one unstrained	To compensate for temperature effects on resistance (both reversible and annealing-type changes) and on length.
14	Heat treatment of strain gauges	To reduce cumulative resistance changes in strain gauges due to gradual annealing at geothermal temperatures.
15	Metal-to-metal seals	To minimize leakage into the instrument at geothermal pressures and temperatures.
16	Metal sheathed, 4-wire, butt welded electrical cable with strain member	To design and construct electrical cable to withstand geothermal fluid pressures and temperatures.
17	3 or more sensors per extensometer probe	To make measurement of distance between markers independent of cable stretch and minimally affected by tool bounce.
18	Conversion to frequency or on/off signal or use of downhole recorders	To eliminate inaccuracies due to signal loss between sensor and surface.
19	Gyroscope	To orient inclinometer measurements in deep cased holes.

TABLE 2.18

PROMISING IMPROVED INSTRUMENTS

PROMISING IMPROVED INSTRUMENTS	APPLICABLE IMPROVEMENTS[1] (parentheses indicate improvement of lesser importance)
SONDE TYPE BOREHOLE EXTENSOMETER with 2 or 3 induction sensors and casing collar markers	1, (3), 5, 6, 7, 8, 9, (10), 12, 15, 16, (17), 18
SONDE TYPE BOREHOLE EXTENSOMETER with 2 or 3 gamma ray detectors and radioactive bullet markers	1, (3), 5, 6, 7, 8, 9, (10), 12, 15, 16, (17), 18
SONDE TYPE BOREHOLE EXTENSOMETER with reed switch sensor and magent markers	1, (3), 5, 6, 7, 8, 9, (10), 15, 16, 17, 18
SONDE TYPE BOREHOLE INCLINOMETER with servo-accelerometer	1, (3), 5, 6, 7, 8, 9, (10), 11, 12, 15, 16, 18, 19
SONDE TYPE BOREHOLE INCLINOMETER with cantilevered pendulum and vibrating strain gauge sensors	1, (3), 5, 6, 7, 8, 9, (10), 11, 12, 13, 14, 15, 16, 18, 19

[1]See Table 2.17 for identification of numbered improvements

TABLE 2.19

TRANSDUCER APPLICATION FOR GEOTHERMAL SUBSIDENCE

TRANSDUCER	RATING	COMMENTS
Electrical Resistance Strain Gauges	2-3	Weldable strain gauges offer much promise because of good stability at high temperatures. Bonded gauges are also available for high temperature use, but are not as stable. Both have successful field records. Downhole high temperature signal conditioning will be required to return a good signal to the surface. Resistance and length changes due to temperature will require compensation on all resistance gauges.
Potentiometers	1	Suffering the same resistance problems as electrical resistance strain gauges, potentiometers have additional problems of friction, wiper contacts and current inavailability for high temperature use.
Capacitance Sensors	1	Although they have good high temperature stability, they are too fragile for field use. Also, moisture and signal loss over long leads are problems.
Electromagnetic Vibrating Wire Sensors	2-3	Their main asset is that the output signal is frequency which is not sensitive to long lead lengths. However, the sensor is temperature sensitive and requires relatively sophisticated signal conditioning including some adjacent to the vibrating wire. It is not currently available in a high temperature package. Temperature compensation will be more complex than for resistance sensor.
LVDTs and RVDTs	2	LVDTs are available in high temperature packages providing the signal conditioning equipment is not at high temperature. LVDTs output a voltage signal and are thus sensitive to long lead lengths. High temperature signal conditioning for downhole use will be required to return a good signal.
Electrical Force Balance Transducers	2	Because they minimize vibrations, these have been the most accurate sensors for tilt measurements. However, they are not available in high temperature packages. Both the restoring coil system and the proximity sensor would require redesign to compensate for length, electrical resistance and magnetic permeability changes due to temperature.
Magnetic Induction Sensors	2	Their main asset is that they have been used in downhole probes to make accurate measurements of settlement. They are not currently available in high temperature packages. Redesign would have to compensate for lead length, electrical resistance and magnetic permeability changes due to temperature.
Time Domain Reflectometers	1	Although advantageous because no downhole electronics or probes are required, this method is too inaccurate. Also with numerous markers, it is hard to analyze.
Reed Switch Sensors	3	Very promising because only simple downhole electronics would be required. The signal is off-on, another good feature. The effects of temperature on the strength of the downhole magnets and on the permeability of the reed switch blades must be assessed. Corrosion of the magnets may be a problem.
Optical Fiber Transducers	1	Problems arise because of fragility of fibers and dependency on high-powered lasers. However, it may offer promise at a later date due to resistance to hostile environments and stray electromagnetic fields.

RATING	DEFINITION OF RATING CATEGORY
1	Limited Potential
2	Some Promise
3	Very Promising

TABLE 2.19

TRANSDUCER APPLICATION FOR GEOTHERMAL SUBSIDENCE (CONT'D)

TRANSDUCER	RATING	COMMENTS
Light Sensitive Transducers	1	May have future application if optical fiber transmission becomes practical for field use. Not available in high temperature packaging, and because of limited temperature range of semiconductors, may not be adaptable.
Radiation Sensors	2-3	Promising because of successful application for settlement measurement in oil and gas wells. Also, radioactive markers can be used with conventional casing. To adapt to high temperatures, it will probably require a return to Geiger tubes.
Acoustic Transducers	1	Not promising due to lack of accuracy in correlating acoustic emissions to settlement or in application of echo-ranging. Although echo-ranging might offer promise since no downhole equipment is required, it only gives data on the depth to one point.
Static Column Fluid Pressure Transducer	1	Not promising; suffers all the problems of electrical transducers plus problems due to fluid density and material corrosion.
Traversing Column Fluid Pressure Sensor	2	Some promise since it's a multipoint sensor with no down-hole electronics. However, density problems and material corrosion problems must be solved.

TABLE 2.20
PERFORMANCE OF CIRCUIT ELEMENTS AT 300°C

CATEGORY	COMPONENT	PERFORMANCE (1 = best choice)	COMMENTS
RESISTORS	Dupont 121	2	
	Cermalloy 530	2 average resistance change 5% over	
	Electro Science Lab 3813	2 25-300°C	
	Cermalloy 530 lot 2430	1 average resistance change 0.2% over 25-300°C. After cure, 0.2% resistance change when aged @ 300°C for 1000h	TCR adjusted for temperature range 25-300°C.
CAPACITORS	porcelain	3 low insulation resistance; 30-60% dissipation factor @ 300°C	
	solid tantalum	3 irreversible changes @ 300°C	
	thin film (SiO_2; Si_3N_4)	2 not as good as thick film	
	multilayer ceramic brick	2 good to 220°C; low insulation resistance @ 300°C random drift above 250°C	
	thick film (Electrode metallization; DuPont 8653; ink: DuPont 8299)	1 7% dissipation factor @ 300°C; capacitance change of 5%; 1% drift for 1000h aging @ 300°C	Small capacitances to 5000pF
	reconstituted paper mica with silicone impregnation	1 2% drift @ 300°C for 100h	0.1-1.0μF large size, expensive
	solid Al electrolytic	1 5% drift @ 300°C for 100h	1.0-100μF; limited to 40V DC
PASSIVE COMPONENTS (General)	high temp. passive components	- Experimental	University of Arizona Solid State Engineering Lab Tuscon, Arizona
ACTIVE DEVICES (discrete)	Si - JFET (n&p)	1 n&p channels functional to 300°C; little change after aging 1000h @ 300°C	Best available currently for high temperature circuitry
	Si - MOSFET	2 n&p channels functional to 300°C; slow degradation after 100h @ 300°C	Aging problems may be improved by change in fabrication process
	Si-Bipolar transistors; Si-Bipolar diodes	3 large increase in leakage current	Fundamental limitation of silicon
	GaAs MESFETs	2 migration of metallization above 250°C; susceptible to spontaneous internal	Improvements possible by redesign since GaAs has intrinsic high temperature capability
	GaAs JFETs	2 oscillations	
	integrated thermionic devices	- not yet available	Under research at Los Alamos
	ceramic vacuum tubes	- high voltage large size	
	large bond gap semiconductor devices -SiC, GaP, InP, diamond crystals	- experimental	

TABLE 2.20

PERFORMANCE OF CIRCUIT ELEMENTS AT 300°C (CONT'D)

CATEGORY	COMPONENT	PERFORMANCE (1 = best choice)	COMMENTS
ACTIVE DEVICES (integrated circuits)	integrated circuits	3 failed ~200°C due to failure of junction isolation	Improvements possible with dielectric isolation
COMPLETE CIRCUITRY	ultrahigh temperature amplifier	- experimental	System Development Corp., Santa Monica, California
BONDING	Au-Au	1 best if feasible; no degradation @ 500°C for 1000h	Requires semi-conductor device with Au metallization
	Au-Al	3 intermetallic problem	Aging degradation produces high resistance connection
	Al wire bonded directly to Cermalloy 4399 or DuPont 9791 Au thick film conductor	3 excessive resistance and weak pull strength with aging due to Au-Al intermetallic problem	
	Al-wire bonded directly to tolerant Pt-Au thick film conducted; Al bonded ultrasonically	2 Weak pull strength; no electrical degradation @ 300°C for 1000h	
	Al-wire bonded directly to modified Au Dupont 9910 thick film materials	1-2 1000h @ 150°C with no degradation Upper limit 300°C	for Al wire systems
	Buffer: Ni or silicon discs between Au thick film and Al wire	2 No bond degradation @ 300°C aging; weak pull strengths with Al-Ni connection	
	Au ribbon; parallel gap welded to Pt-Au conducting layer	1 1000h @ 500°C with no degradation	Add-on component bonding and crossovers
	Au/Ge solder	1	Attach active devices in TO cans to printed circuit boards and small discrete components to hybrid substrates

(Palmer et al, 1978; McBrayer et al, 1977; Palmer, 1977; Baker, Campbell and Hughen, 1975)

TABLE 2.21
SELECTED RECORDER SYSTEMS
(For Above Ground Data Recording)

TYPE OF RECORDER	APPLICATION	MAXIMUM NO. OF CHANNELS	RANGE OF RECORDING RATES			ACCURACY	ADVANTAGES & DISADVANTAGES
			CHART SPEED	WRITING SPEED	RATES FOR EVENTS/POINTS		
EVENT	Yes-No or On-Off events; suitable for use with reed switch, contact closure devices	Up to 40 channels typical; Some to 150 channels	6 mm/hr - 200 mm/sec Use 30 strokes per inch of chart	0.015-0.02 sec-full scale typical; 0.0010 available	up to 20 events/sec max	system dependence approx 0.25% to 2%	Inexpensive; reliable. Tedious to analyze the data.
MULTIPOINT	Generally used for slowly-changing industrial operations; many variables vs. time	Up to 48 Channels	6 mm/hr - 100 mm/min	0.3 to 1.0 sec. full scale response	2 secs/point to 16 points/sec	0.25%+ of full scale	Very slow; not computer compatible.
STRIP CHART	Variable input such as current, voltage of strain transducers vs. time	1-4 channels typical; Up to 30 possible	4 mm/hr - 200 mm/sec typical;	0.3 to 1.0 sec-full scale response typical; 0.12 sec avail.	2-4 Hz typical; Available to 125 Hz	0.25% to 0.5% full scale typical; 1-2% at high frequency	Reliable; cheap compared to magnetic tape. Not computer compatible; available with galvanometric or servo-potentiometer mechanisms; tedious to analyze
CIRCULAR OR ROTARY CHART	As above; usually dedicated to single variable such as temperature, water level	1-2 typical	4 hr-8 day rotation	Very slow	~1 event per minute	relative to 24 hour system	Too slow for most applications; data not computer compatible.
OSCILLOGRAPH RECORDER	Rapid events, such as geophysical p and s-wave tests	Up to 16 Channels	0.5 mm/sec to 1.3 m/sec	up to 350 m/sec	10-1000 Hz full scale;	5% full scale	Not suitable for field use - delicate, not easily portable
STORAGE OSCILLOSCOPE	Store events up to 450 KHZ; Store size: 1024 x 8 bits Permanent record can be made on strip chart recorder	1-2	N/A	Very fast	Very fast	+ 3% Typical	Data difficult to reduce. Difficult to interface to a computer. Excellent for rapid data examination.
PAPER TAPE PERFORATOR	Digital data recording	1-2 Typical		10 to 30 characters per second Typical	Encoding dependent	digital dropout rate may be significant	Cheaper than mag. tape at low speed; as expensive at high speed; moderately accurate; can feed into almost any teletype; interfaces to most computers; not sensitive to dust & field conditions; possible to verify operation by looking for certain punch patterns.
MAGNETIC TAPE	For large quantities of data; Also for future analysis of data by computer	6 channels with data acquisition system; 7 or 9 track tape typical	23 mm/sec-6 m/sec Each track req's signal cond.	Very fast; compatible with computers		Excellent; dropout rate for digital data is negligible	Band width 20Hz to 2MHz; faster, more info than paper tape; cheaper models may not interface with many computer installations. Good way to store data a long time; Relatively expensive; sensitive to dirt.
PHOTO-GRAPHIC	Use with CRT, downhole instruments requiring 2-D records, such as compasses and pendulums	1 Typical	Relatively slow (typically)			Can be very useful for extensive data compression	Special purpose - data difficult to process.

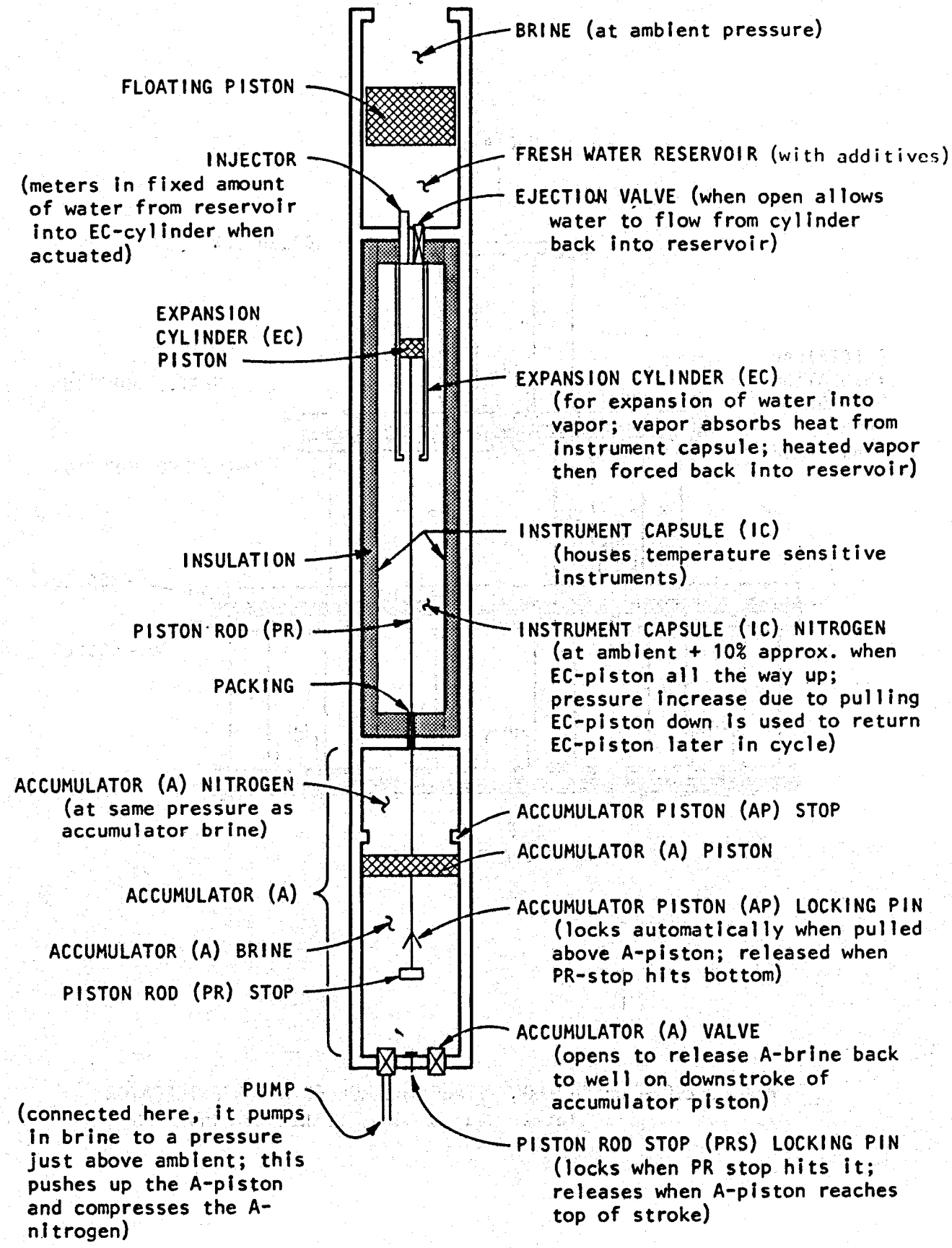

Figure 2.1 - BASIC ELEMENTS OF POSSIBLE MECHANICAL HEAT PUMP

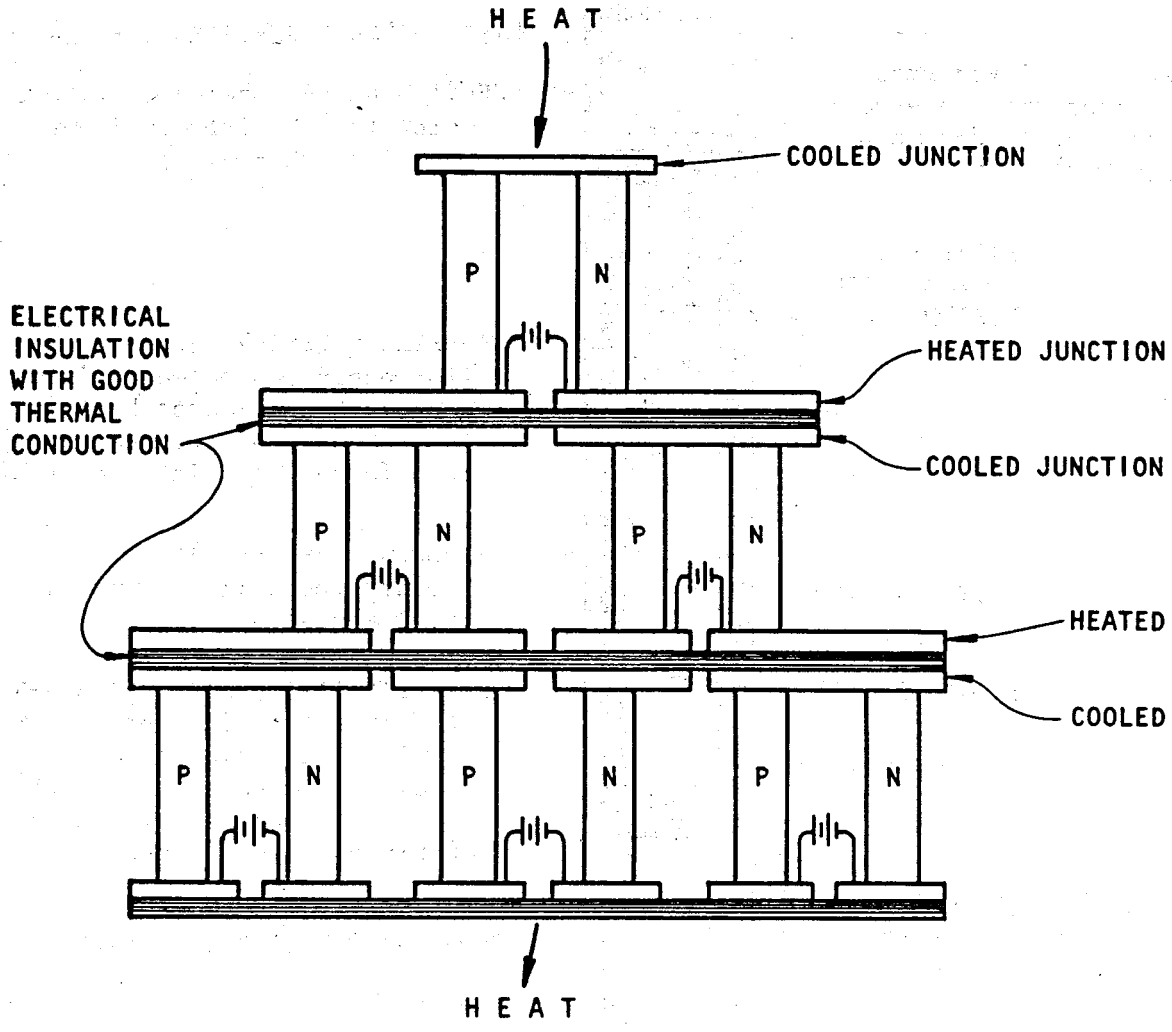

Figure 2.2 - CASCADING 3-STAGE THERMOELECTRIC REFRIGERATOR
(after Wolfe, 1962; Heikes and Ure, 1960)

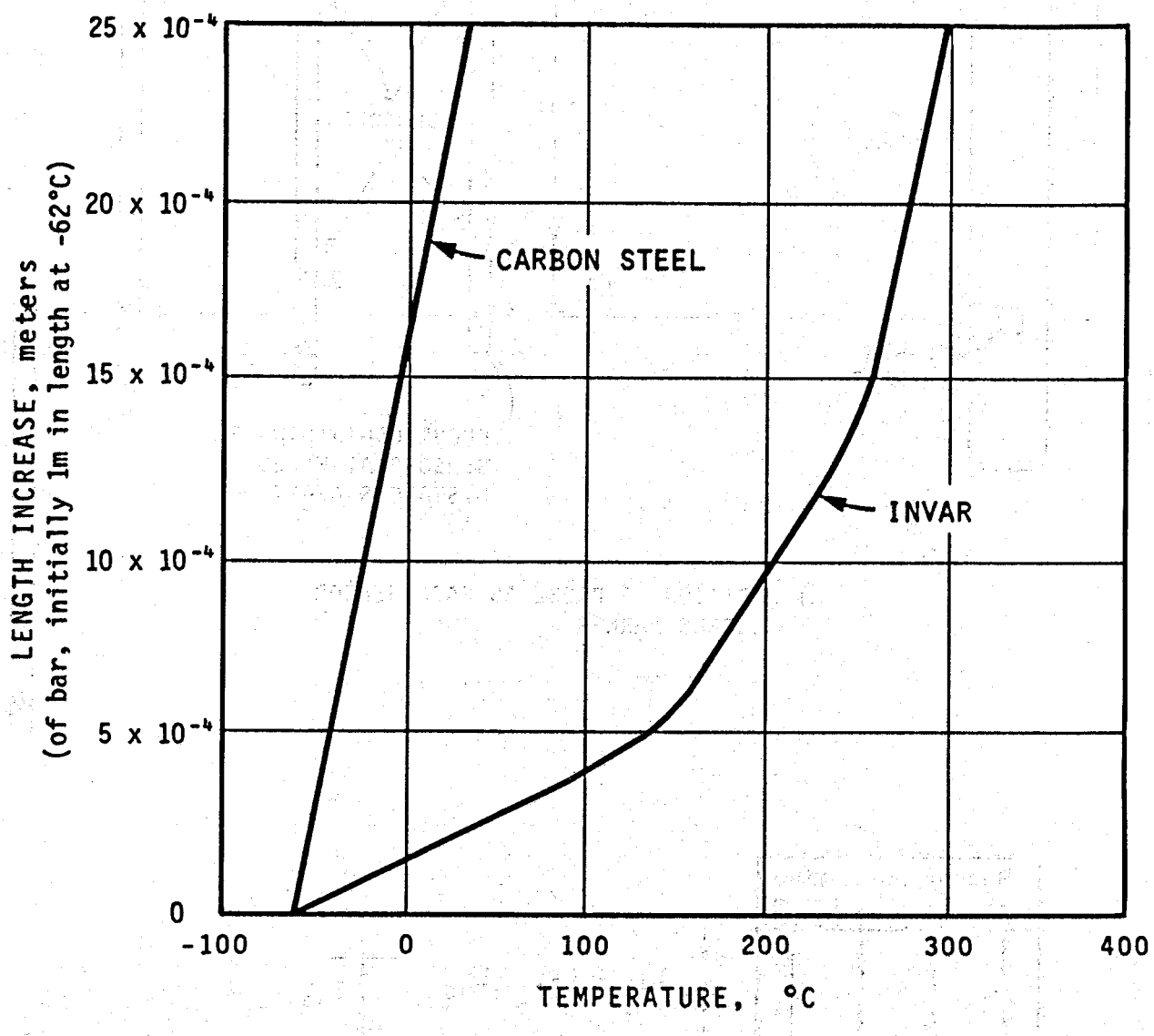

Figure 2.3 - RELATION BETWEEN LENGTH INCREASE AND TEMPERATURE FOR CARBON STEEL AND INVAR
(after Carpenter Steel Division, 1976)

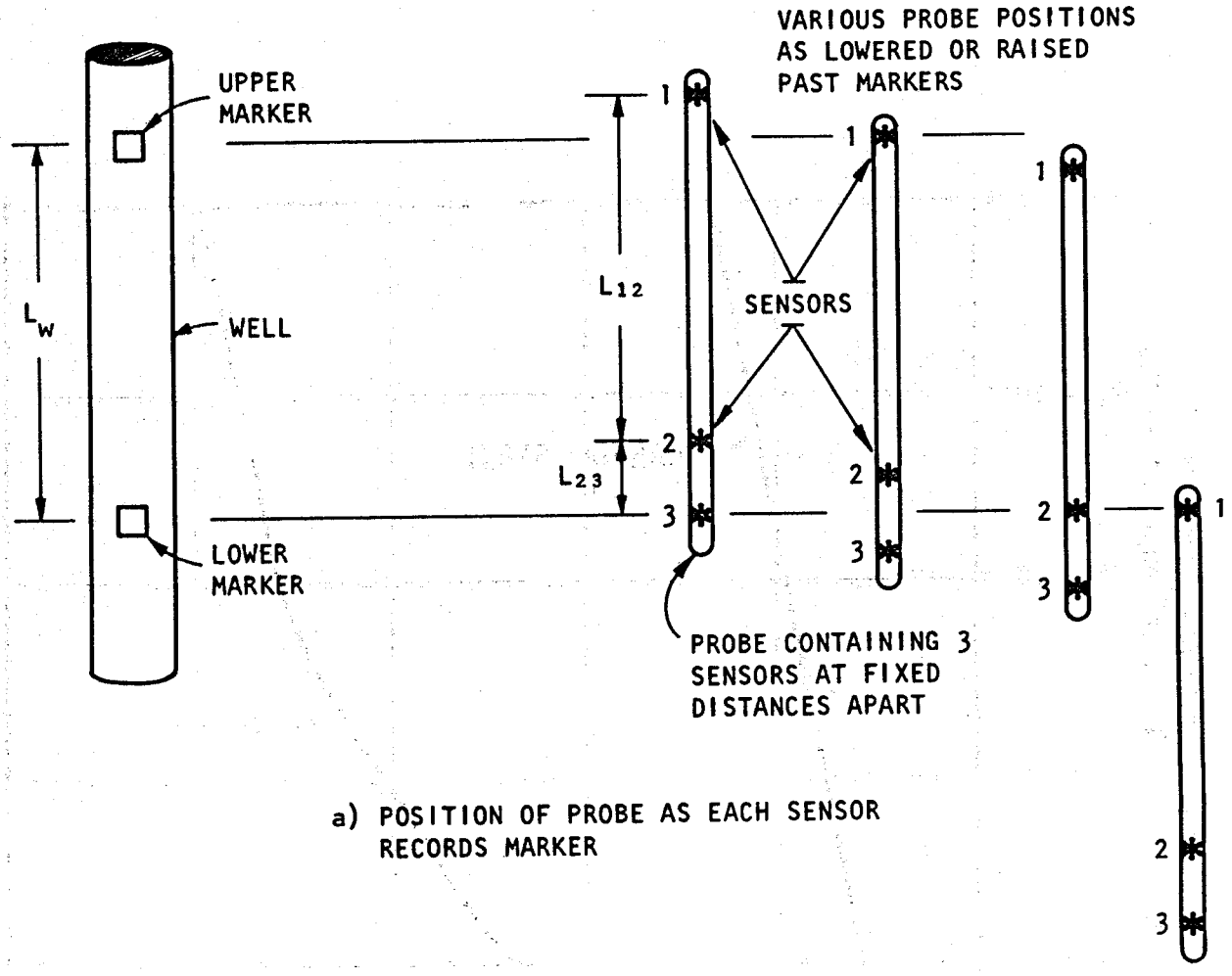

a) POSITION OF PROBE AS EACH SENSOR RECORDS MARKER

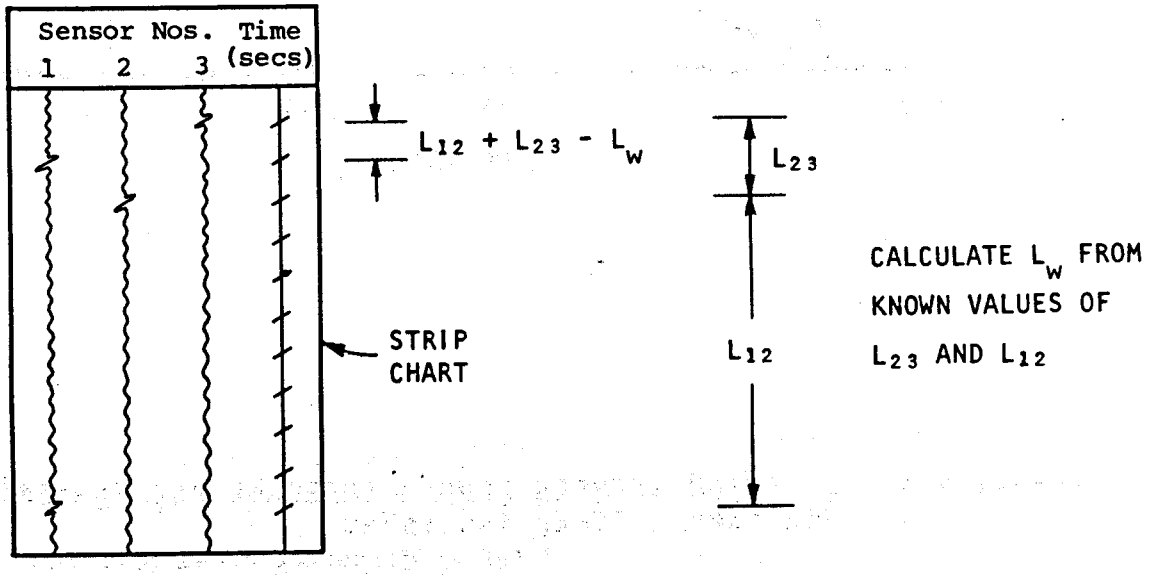

b) DETERMINATION OF DISTANCE BETWEEN MARKERS FROM STRIP CHART

Figure 2.4 - USE OF THREE SENSOR PROBE TO DETERMINE DISTANCE BETWEEN DOWNHOLE MARKERS

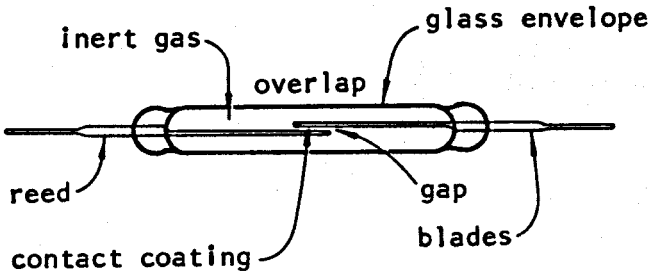

a) REED SWITCH COMPONENTS
(F-R Electronics, 1972)

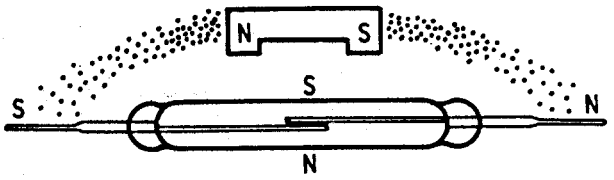

b) NORMAL OPERATING POSITION OF SWITCH
(F-R Electronics, 1972)

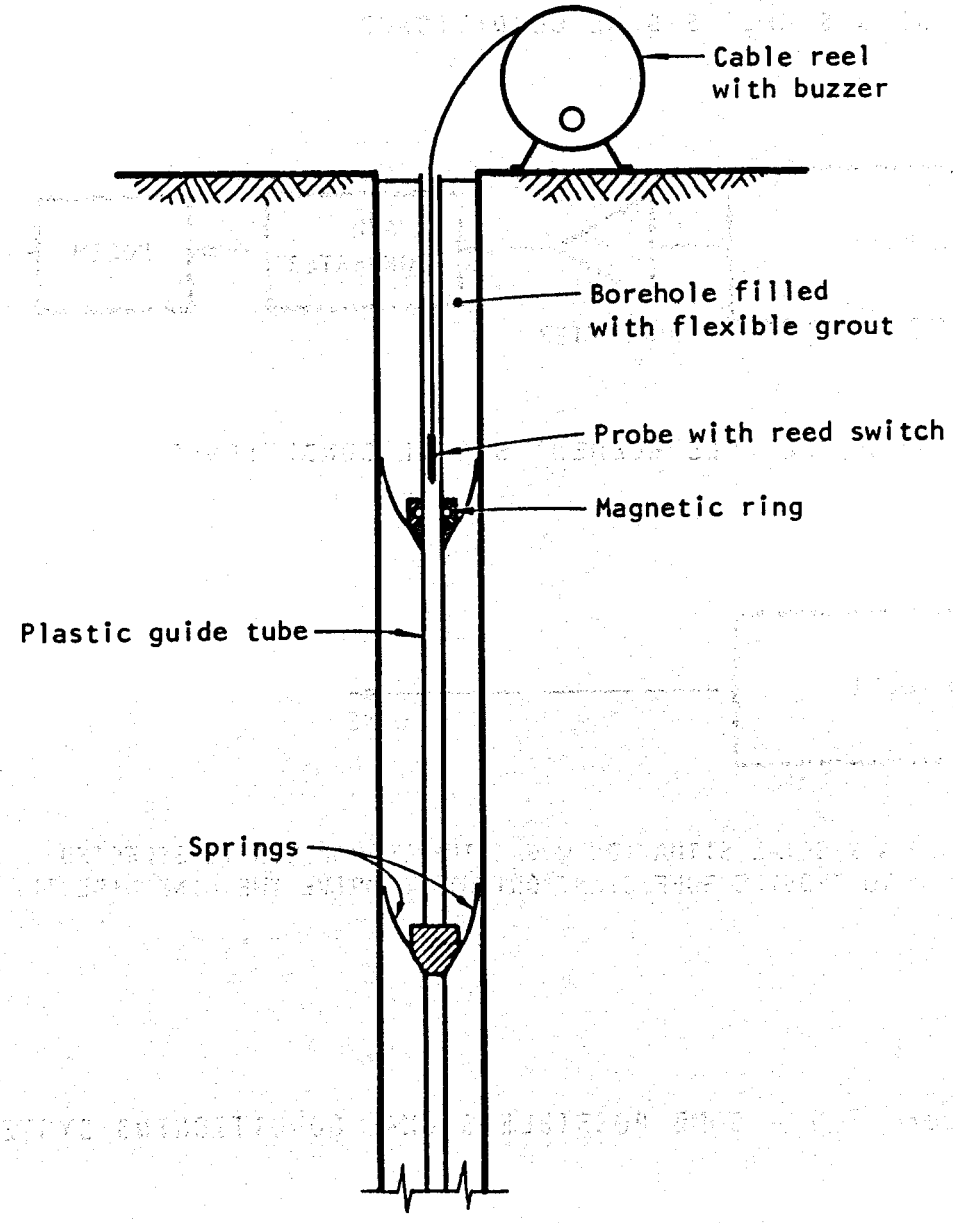

c) APPLICATION OF REED SWITCH IN GEOTECHNICAL ENGINEERING

Figure 2.5 - REED SWITCH SENSOR

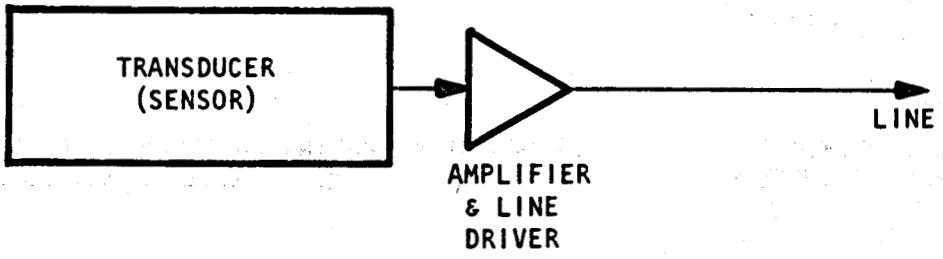

a) A SIMPLE SIGNAL CONDITIONER

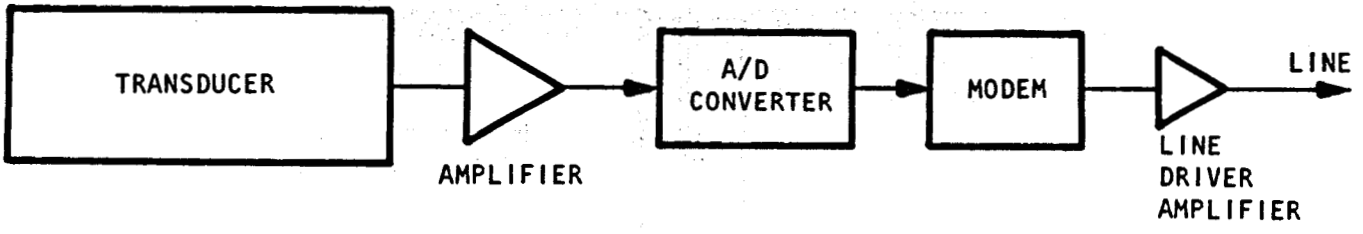

b) A MULTIPLE ELEMENT SIGNAL CONDITIONER

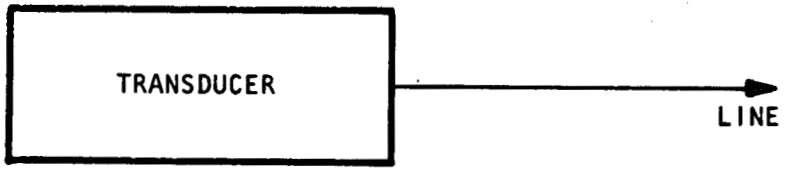

c) A SPECIAL SITUATION WHERE THE TRANSDUCER IS SELECTED
TO PROVIDE SUFFICIENT OUTPUT TO DRIVE THE LINE DIRECTLY

Figure 2.6 - SOME POSSIBLE SIGNAL CONDITIONING SYSTEMS

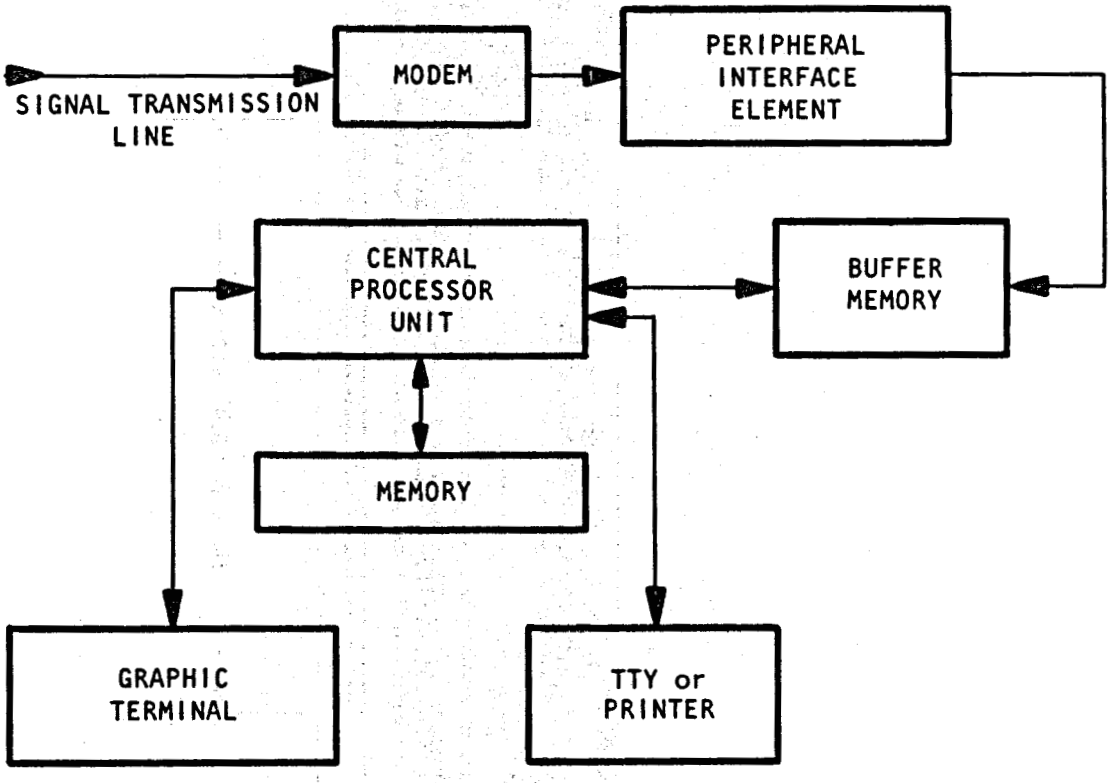

Figure 2.7 - A POSSIBLE ABOVE-GROUND COMPUTER STATION (Either a mini-computer or micro-computer system is applicable)

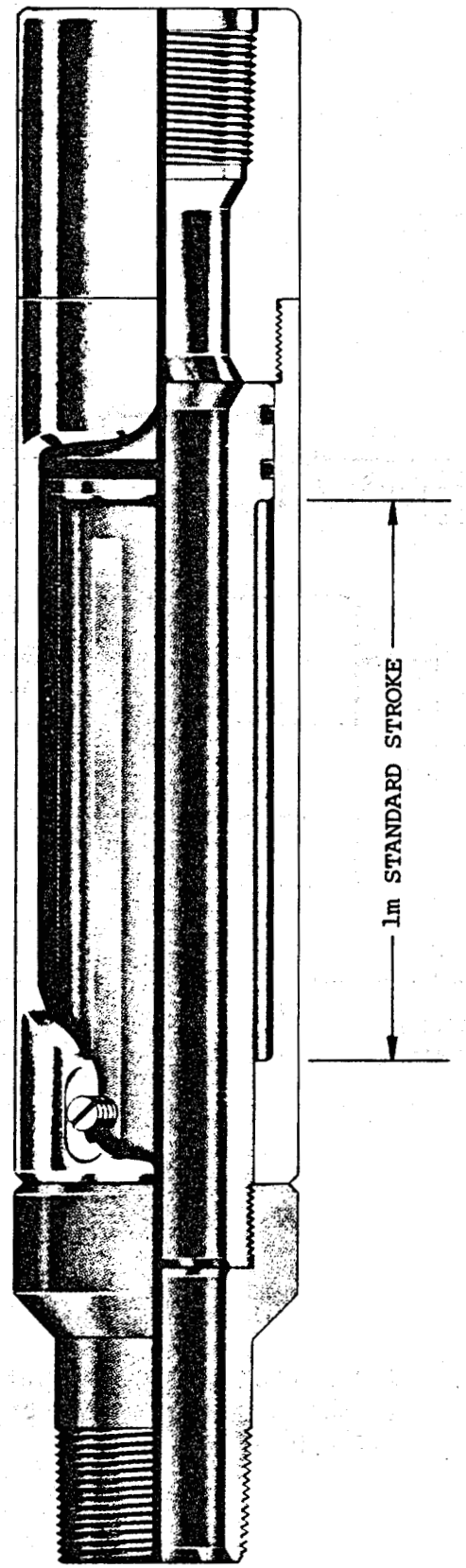

a) COMMERCIAL CASING EXPANSION JOINT
(after Lynes, 1978)

Figure 2.8 - SLIP COUPLINGS FOR SUBSIDENCE MONITORING

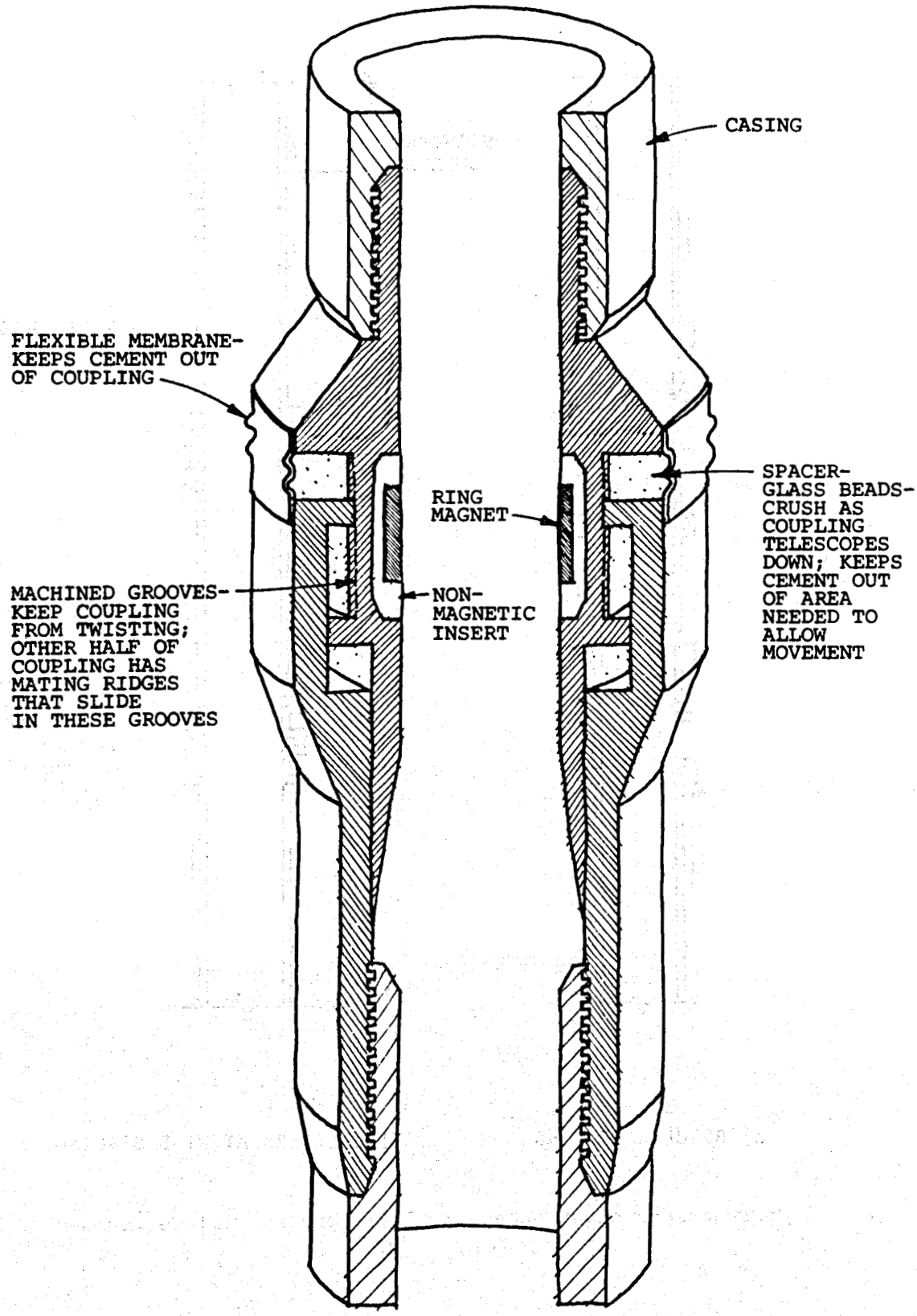

b) SKETCH OF POSSIBLE SLIP COUPLING INCORPORATING RING MAGNET AND FLEXIBLE MEMBRANE

Figure 2.8 - SLIP COUPLINGS FOR SUBSIDENCE MONITORING (CONT'D)

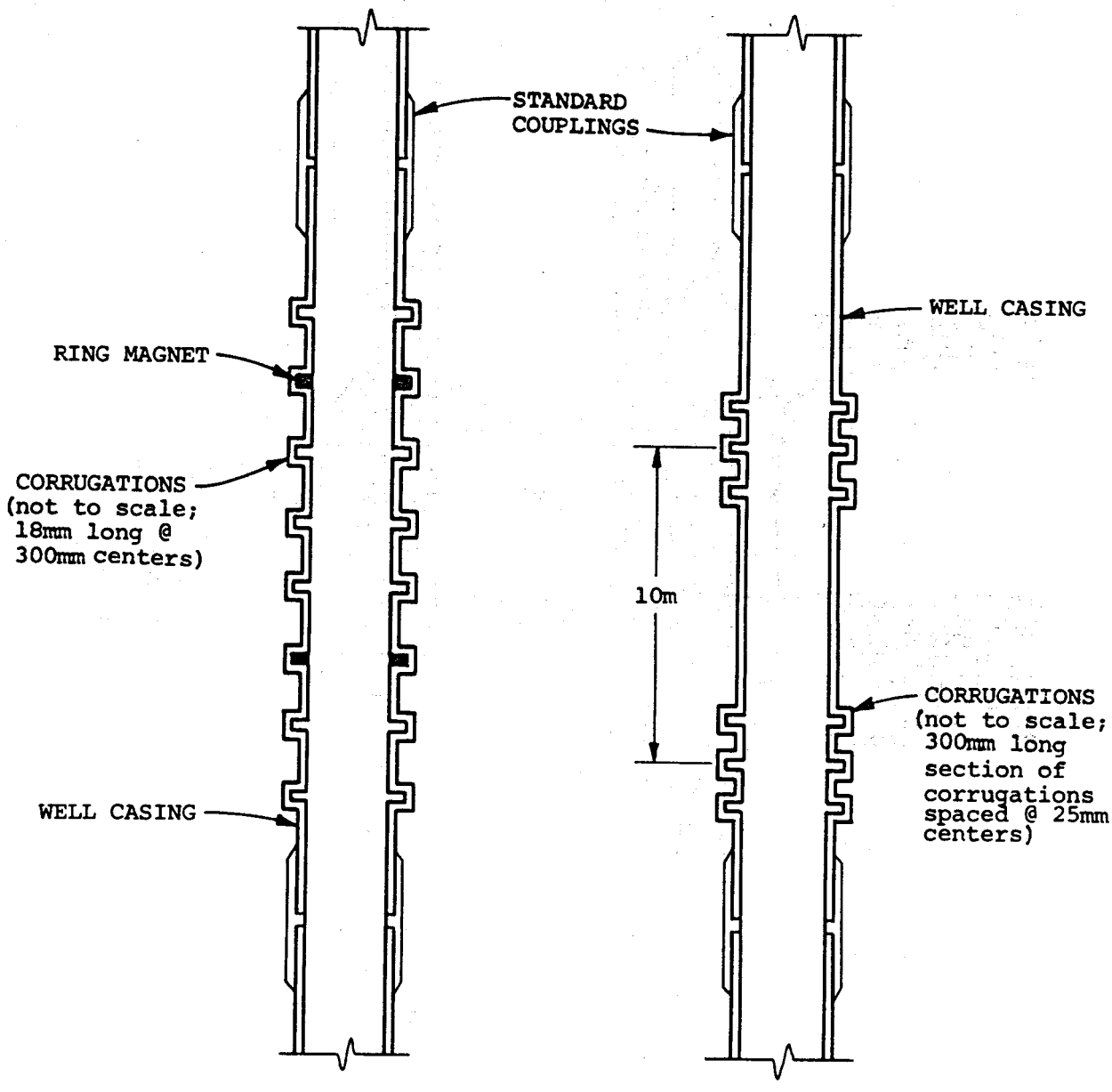

a) REGULAR SPACING

b) CLUSTERS AT WIDE SPACING

Note: Corrugations shown schematically; corners will be rounded

Figure 2.9 - POSSIBLE CORRUGATION ARRANGEMENTS

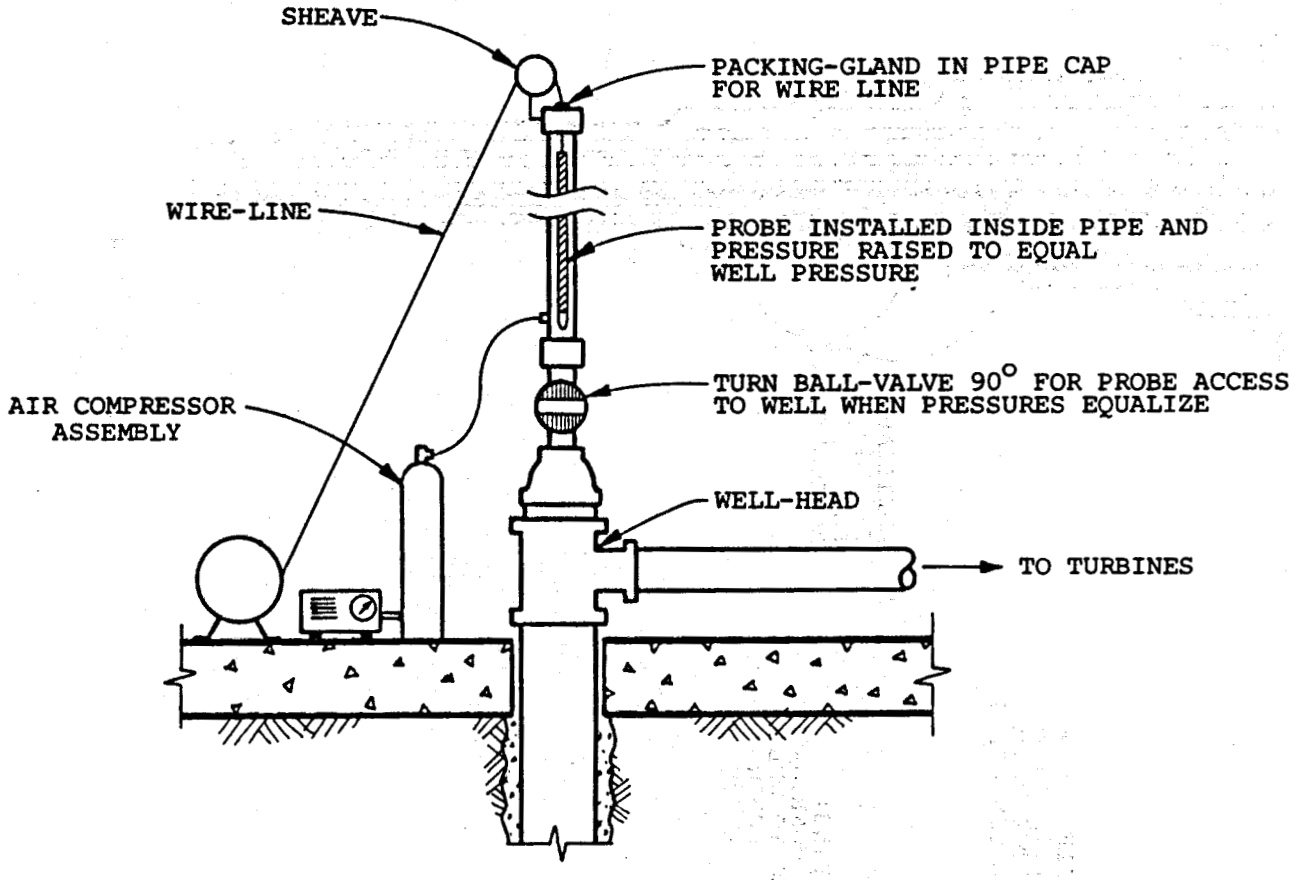

NOTE: ALL EQUIPMENT EXCEPT PROBE IS LEFT AT WELL HEAD.

Figure 2.10 - ACCESS GLAND FOR SETTLEMENT PROBE

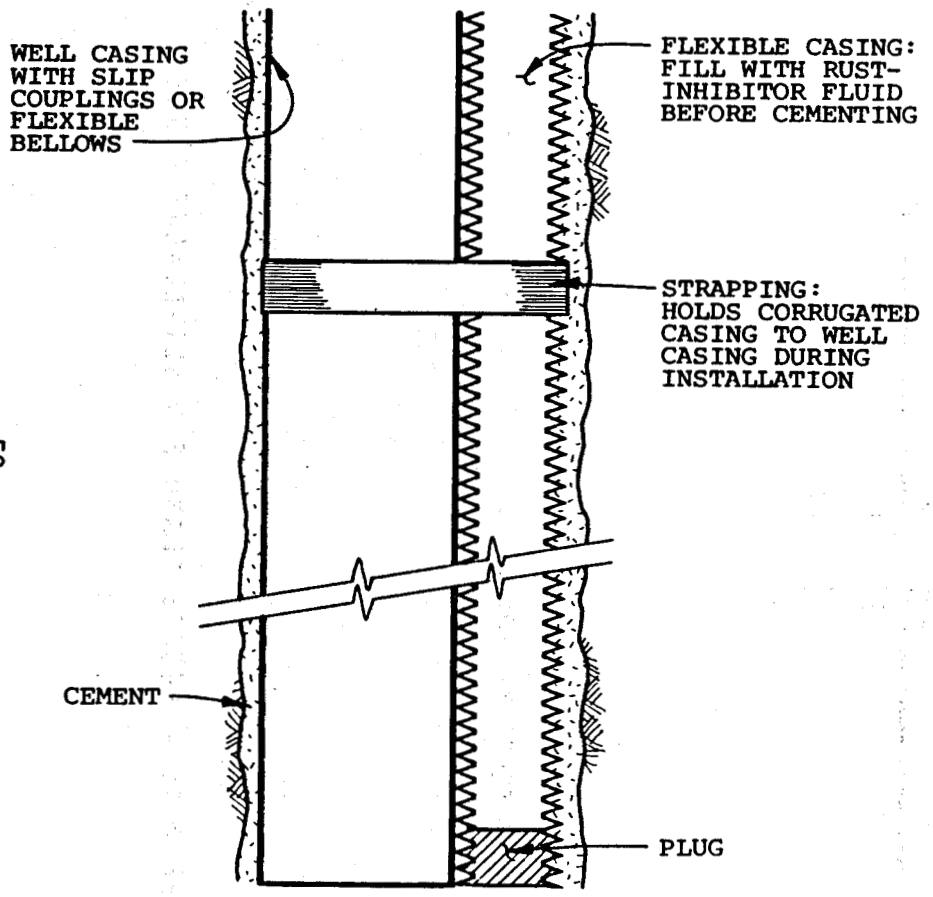

a) SCHEMATIC OF INSTALLATION

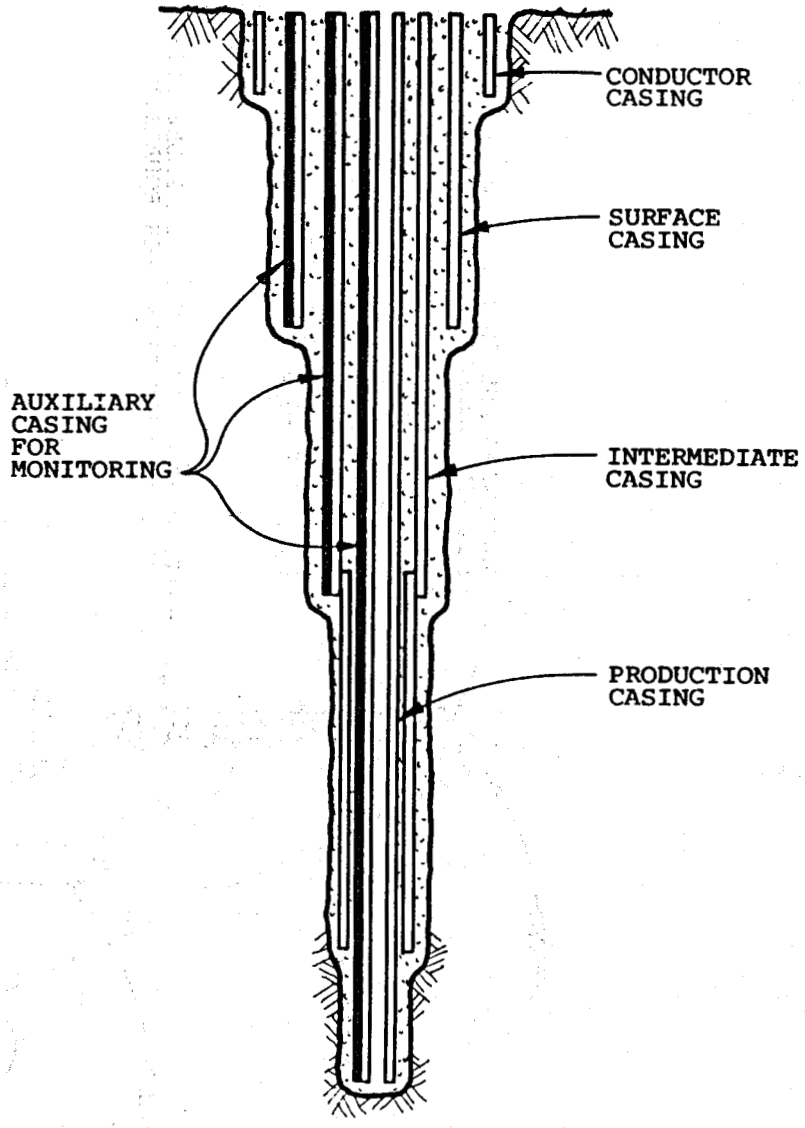

b) USE OF MULTIPLE AUXILIARY CASING

Figure 2.11 - AUXILIARY CASING INSTALLATION

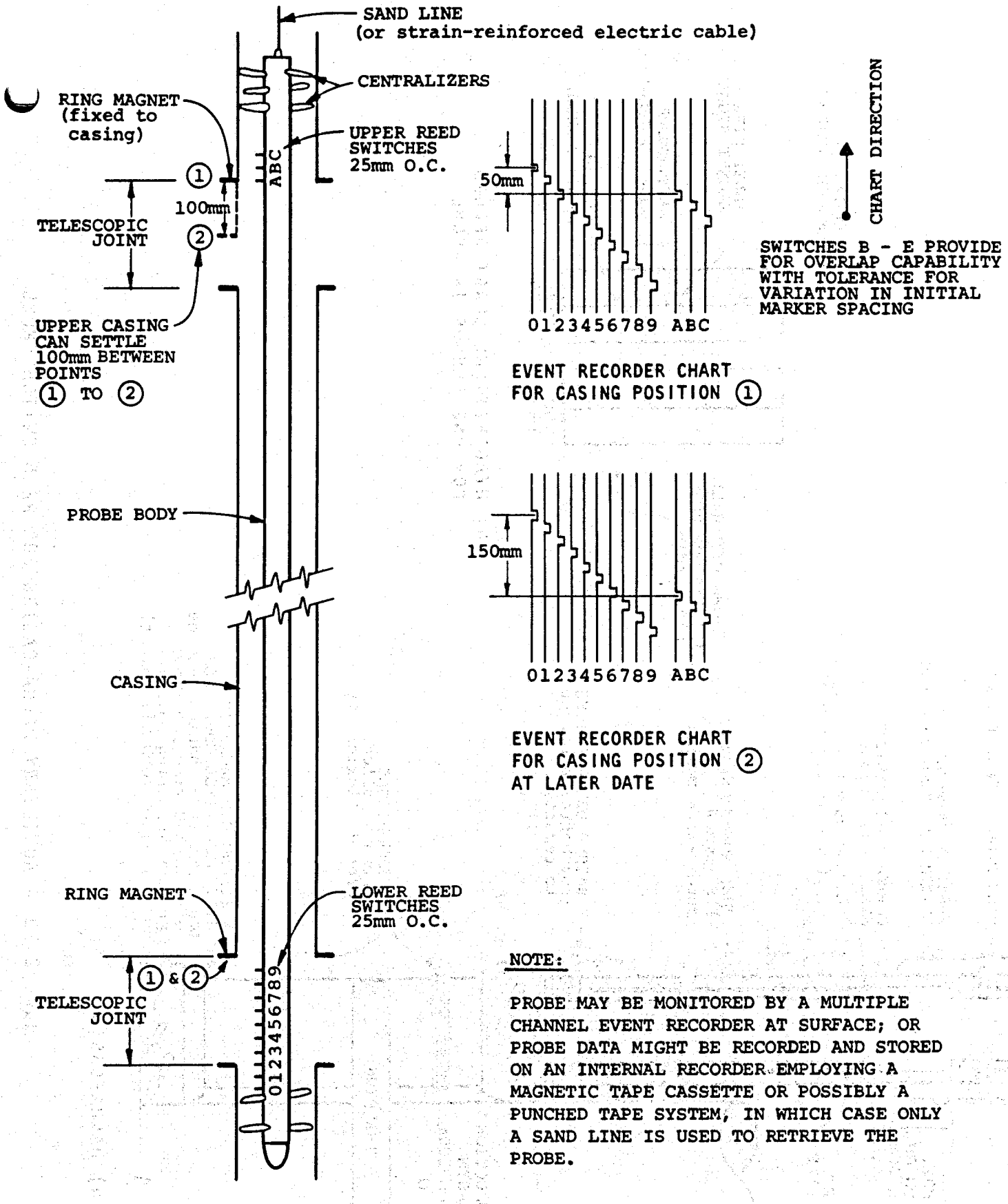

Figure 2.12 - MULTI-SENSOR REED SWITCH PROBE

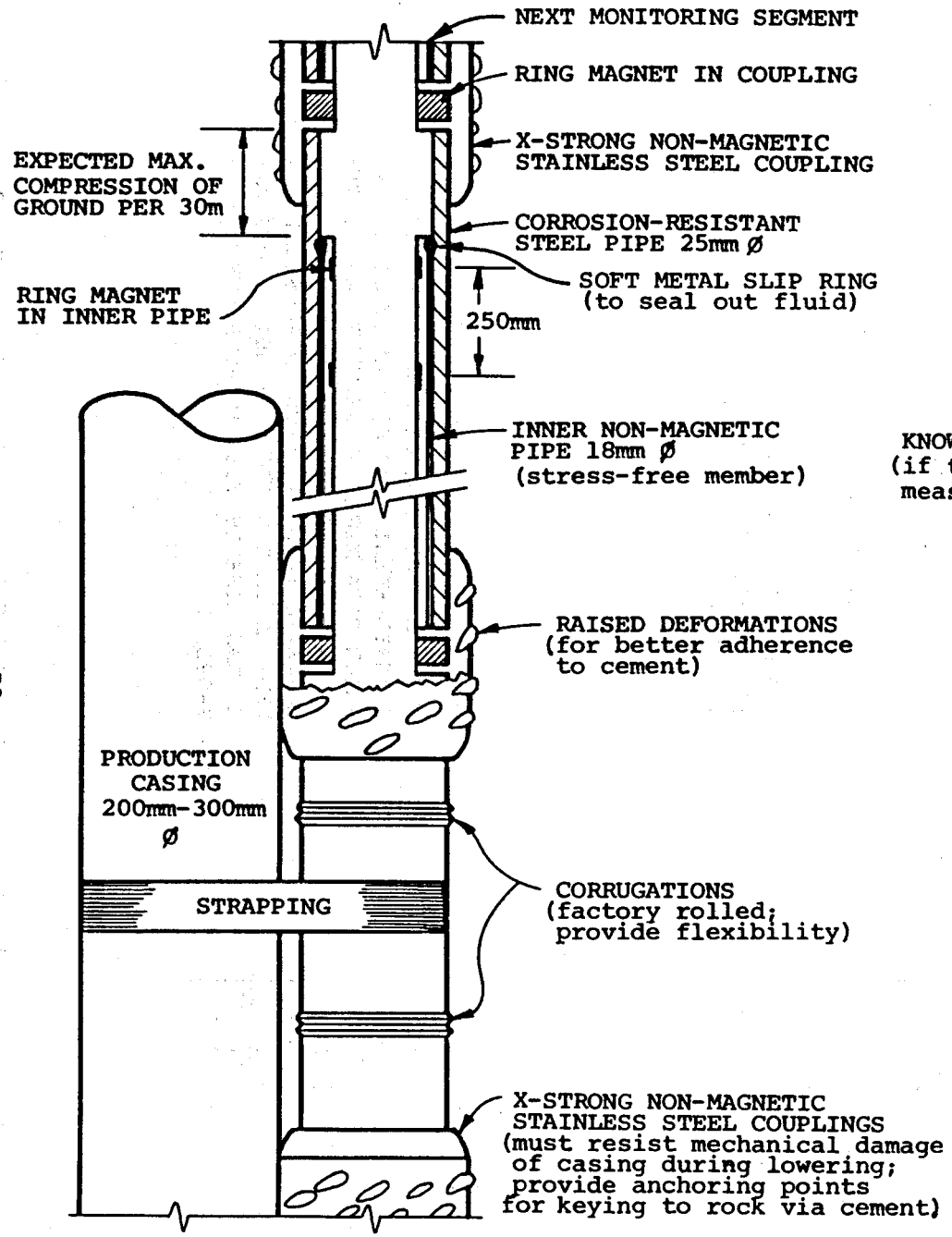

a) MAGNA-CASING

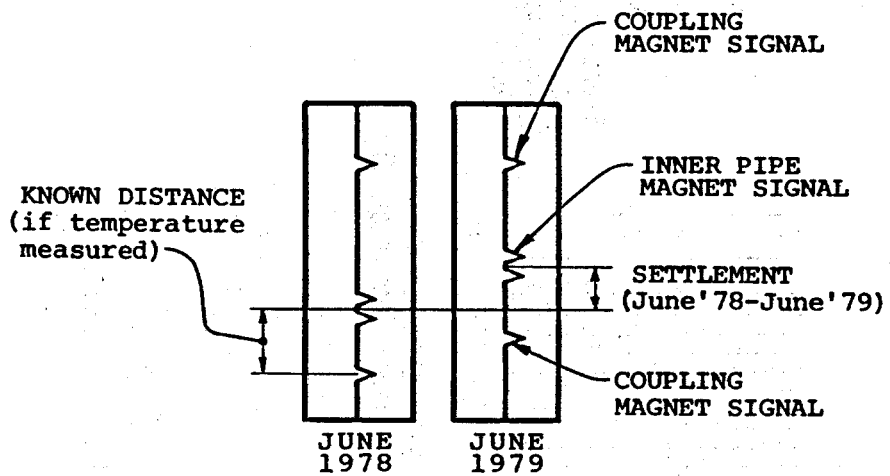

b) HYPOTHETICAL CHART RECORD FOR ONE SENSOR IN PROBE

Figure 2.13 - AUXILIARY MAGNA-CASING FOR REED SWITCH PROBE

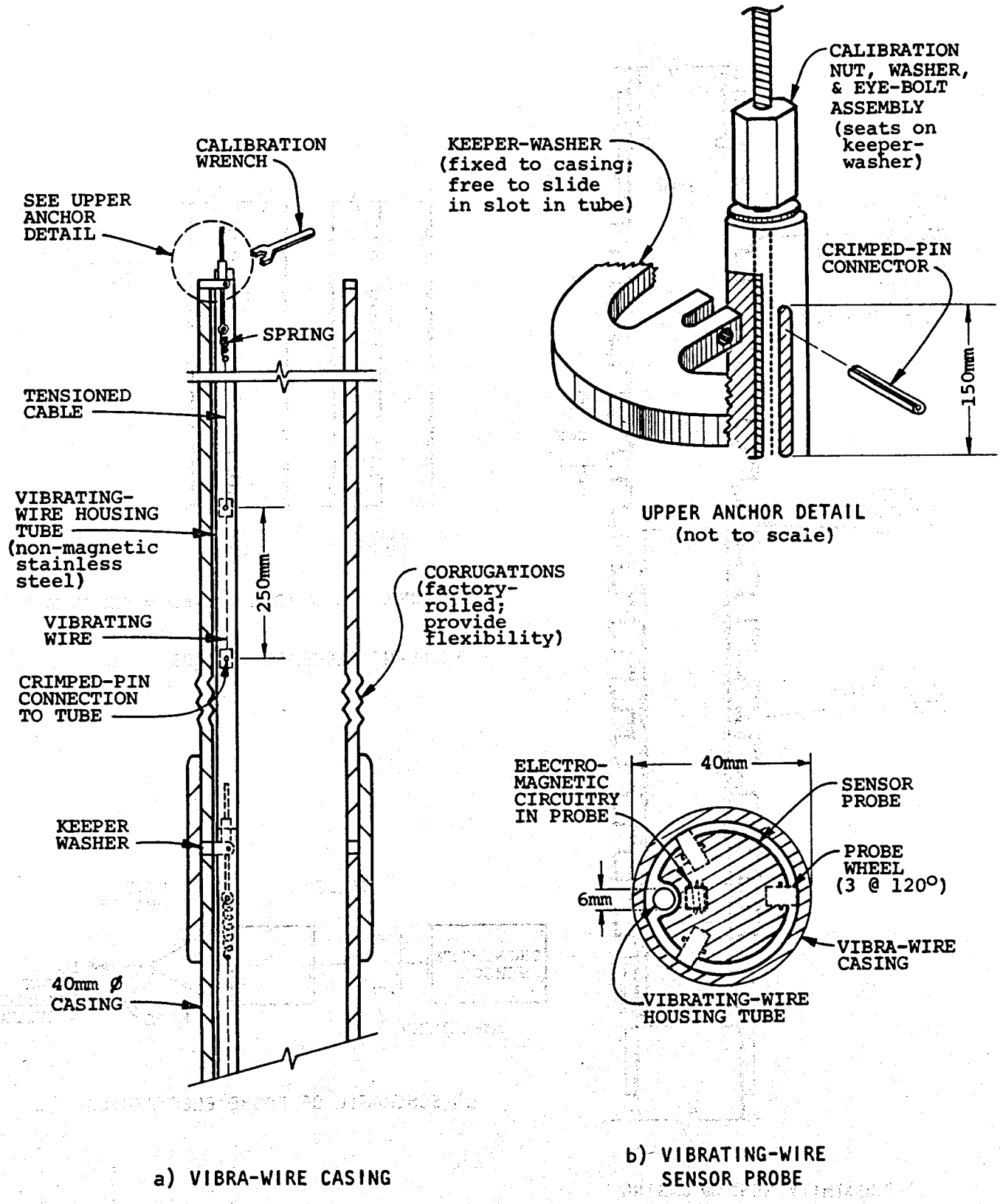

Figure 2.14 - VIBRATING WIRE METHOD

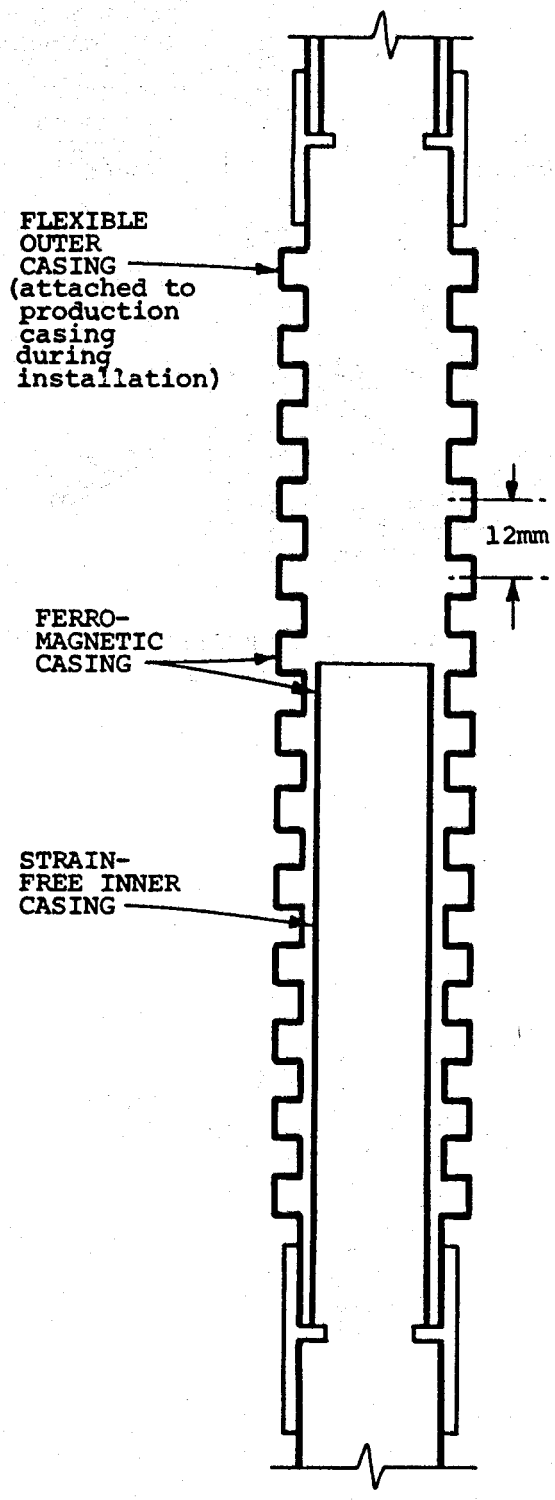

a) PROXIMITY SENSOR CASING

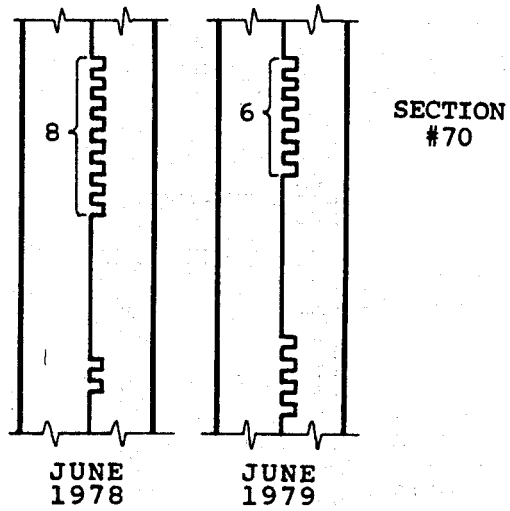

SUBSIDENCE = 2 X 12mm = 24mm @ SECTION 70

b) EVENT RECORDER RECORDS

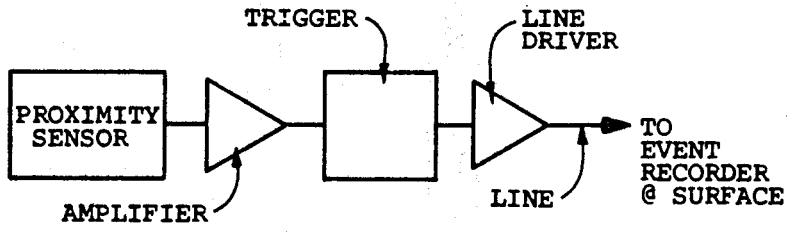

c) SCHEMATIC OF PROBE ELECTRONICS

Figure 2.15 - PROXIMITY SENSOR PROBE METHOD

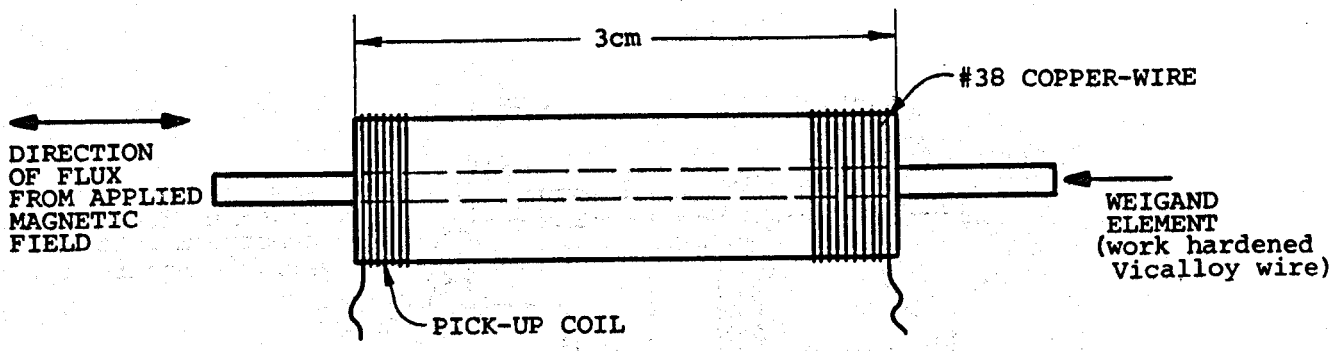

a) WEIGAND ELEMENT AND PICK-UP COIL

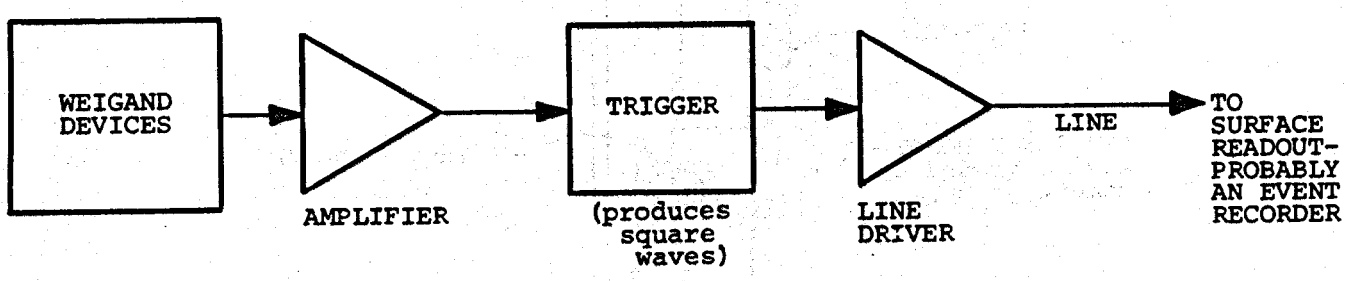

b) SCHEMATIC OF PROBE ELECTRONICS

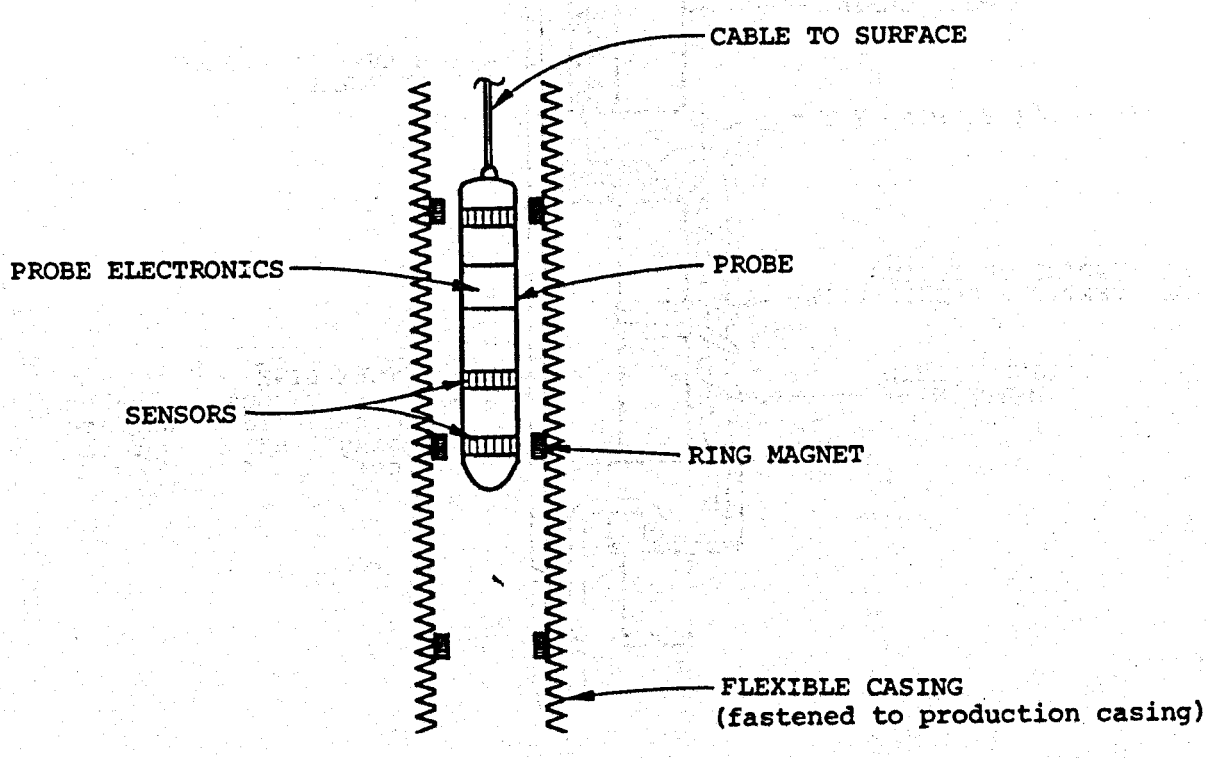

c) SCHEMATIC OF WEIGAND PROBE

Figure 2.16 - WEIGAND EFFECT SETTLEMENT DEVICE

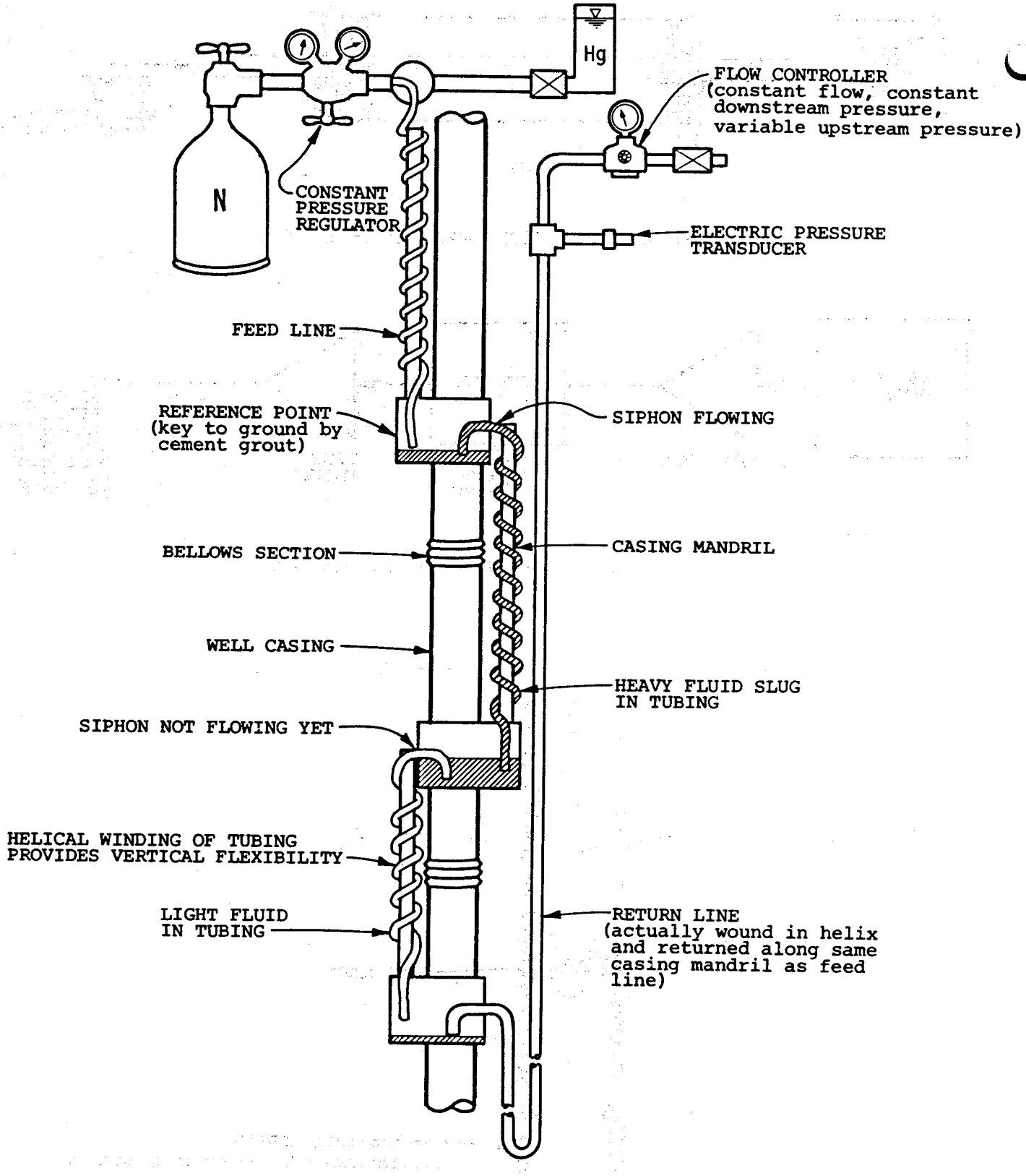

(a) SCHEMATIC OF DOUBLE FLUID SETTLEMENT DEVICE

Figure 2.17 - DOUBLE FLUID SETTLEMENT DEVICE METHOD

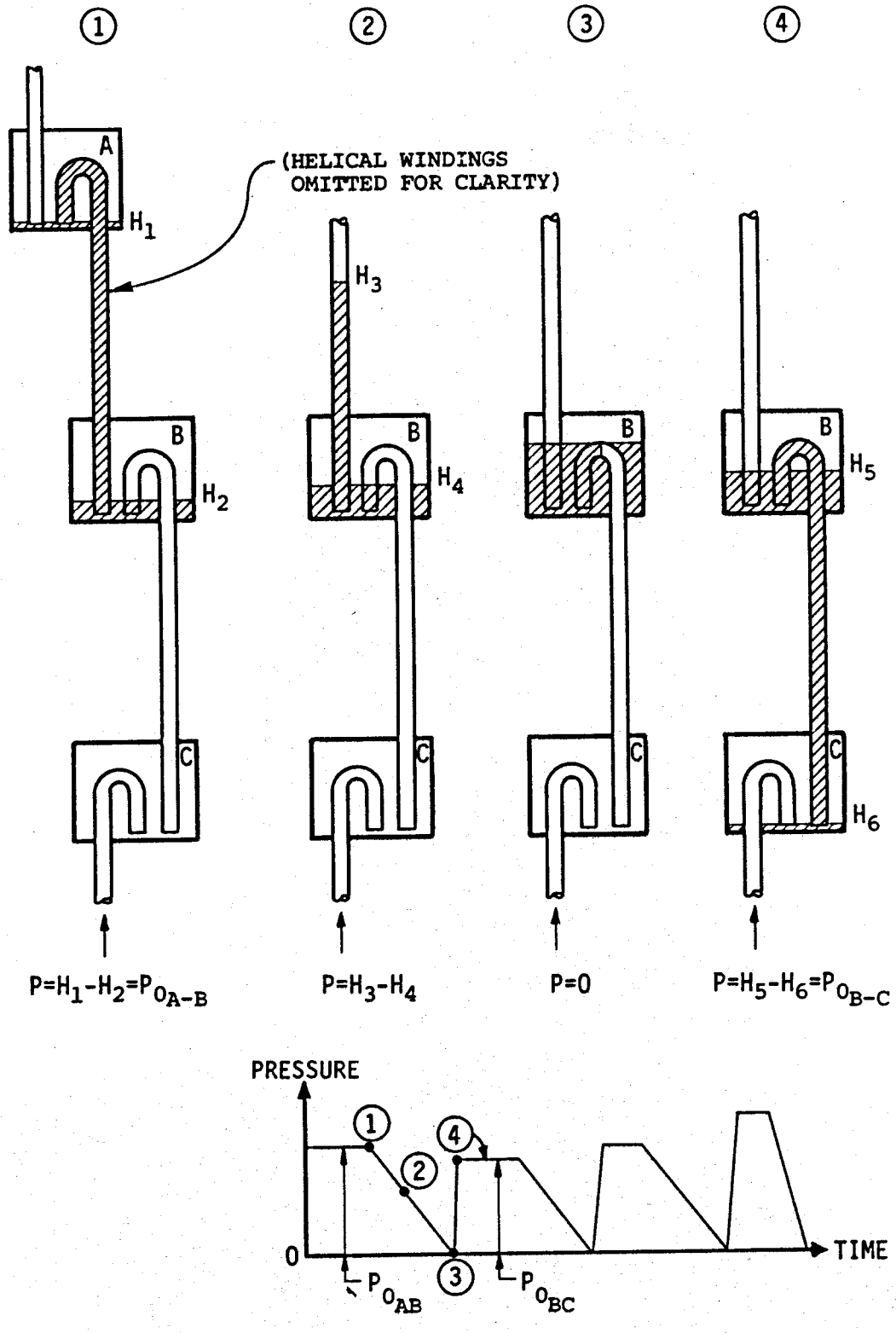

(b) SYSTEM OPERATION SHOWING READOUT

NOTE:

EACH INTERVAL BETWEEN REFERENCE POINTS HAS A UNIQUE VALUE OF P_0 INITIALLY; AS SUBSIDENCE OCCURS THE VALUE OF P_0 WILL DECREASE. THE AMOUNT OF SUBSIDENCE MAY BE DIRECTLY CALCULATED FROM THE CHANGE IN P_0: SUBSIDENCE = $\Delta P_0 / (\gamma_{HG} - \gamma_N)$

Figure 2.17 - DOUBLE FLUID SETTLEMENT DEVICE METHOD (CONT'D)

3.0 RECOMMENDED SUBSIDENCE MEASUREMENT INSTRUMENTS

3.0 RECOMMENDED SUBSIDENCE MEASUREMENT INSTRUMENTS

3.1 COMPARATIVE RATING OF EXISTING, IMPROVED AND NEW INSTRUMENTS

3.1.1 Promising Extensometers for Further Development

In the Interim Reports prepared for this project, numerous instruments were discussed. In each report, the most promising of the instruments considered were identified by use of a rating procedure. Developmental work and testing can proceed on only a few of these instruments. To identify those instrument systems most likely to monitor geothermal subsidence movements successfully, the top instruments from each of the interim reports are comparatively evaluated in this section. The rating system for this purpose is adapted mostly from the two rating systems already used in this study. In Interim Report No. 1, a rating system was developed to evaluate the instrument's ability to meet basic monitoring objectives (accuracy, depth, etc.) and basic environmental requirements (corrosion, scaling, etc.). The rating system in Interim Report No. 4 examined in more detail certain technical problems such as the modifications to well casing installation. The present, comprehensive rating system is shown in Table 3.1. The instruments are rated in Table 3.2. The extensometers identified as meriting further development are:

- TRIPLE SENSOR INDUCTION PROBE
  (with casing collar markers)
- TRIPLE SENSOR GAMMA RAY DECTECTOR PROBE
  (with radioactive markers)
- TRIPLE SENSOR REED SWITCH PROBE
  (with magnet markers)
- TRIPLE SENSOR OSCILLATOR-TYPE MAGNET DETECTOR PROBE
  (with magnet markers)

All are designed for use in cased wells and will function best if the well casing incorporates slip couplings or bellows sections. The gamma ray detector probe may also be used in unlined holes. Table 3.3 summarizes the basic specifications for these instruments.

3.1.2 Promising Inclinometers for Future Development

As work proceeded on this study, it became increasingly apparent that to reach the primary goal of this project, the development of an instrument to monitor vertical displacements, many problems had to be overcome. At the same time it became clear that the secondary aim, measurement of horizontal movements, was perhaps even more difficult to achieve. First, an inclinometer will experience the same temperature, corrosion, scaling and electronics problems that a settlement probe must cope with. It must be capable of measuring not only inclination, but also orientation and depth

for accurate results. In fact, to ensure that horizontal measurements are repeatedly made at the same locations, the inclinometer may incorporate a probe-type settlement sensor to detect downhole markers. The depth of the horizontal measurement could then be determined by looking up the depths of the markers in the vertical displacement survey. Secondly, the horizontal movements due to subsidence are generally much smaller than vertical movements, requiring relatively more sensitive sensors. Because of these measurement problems and because the measurement of subsurface horizontal movements is not commonly performed in subsidence engineering studies, in this study extensometer development has been emphasized over inclinometer development.

Promising inclinometers incorporating mechanical and materials improvements were identified in Interim Report No. 2. Some of the electronics problems can be resolved using components and techniques discussed in Interim Report No. 3. These inclinometer systems:

- SONDE-TYPE BOREHOLE INCLINOMETER
  (with servo-accelerometer and gyrocompass; modified)

- SONDE-TYPE BOREHOLE INCLINOMETER
  (with cantilevered pendulum, vibrating wire strain gauge sensors, and gyrocompass; modified)

merit further development. However, we feel that such work should not begin until the major developmental problems in vertical subsidence monitor systems have beenr resolved. Consequently, these instruments are not further rated or discussed in this report.

3.2 REVIEW OF SELECTED EXTENSOMETER SYSTEMS

The rating procedures identified four instrument systems for further development. Recommendations for the developmental process are presented in Section 4.0. A discussion of the basic features of each of these candidate instrument systems is presented below.

3.2.1 General Considerations

All of the systems proposed for further development use probes containing three sensors that detect downhole markers. The following comments apply to all of them.

Sensor and Marker Spacing: In general it appears to be most convenient to incorporate the downhole markers into the casing couplings. The distance between couplings is typically 10-15 m; in design of the probe, the top and bottom sensors should be separated by the typical coupling spacing for a given geothermal field. The middle sensor should be one-third that distance from the top (or lower) sensor. The system may be designed so that the top (or lower) and middle sensors share a transmission channel since they will not intercept a marker simultaneously.

Casing: Of the four proposed systems, all except the radiation sensor system must operate in cased holes. For measurement purposes, the most accurate results will be obtained if the well casing is keyed to the producing formation. As noted previously we can then then monitor casing compression as a measure of formation compaction. This keying effect can be achieved with a well casing that is cemented, perforated as needed and incorporates slip couplings. Accurate results may also be obtained using a gravel-packed slotted liner with slip couplings. In addition, in the Gulf Coast geopressured formations, the use of slip couplings will prevent loss of the installation if large compaction movements occur.

Unfortunately, slip couplings are not yet available for geothermal use. They should be considered a high priority development item. Without slip couplings, satisfactory compaction monitoring of somewhat lower sensitivity is still possible in liquid-dominated areas as long as the casing is cemented or gravel-packed. In these areas slip couplings may not be needed to prevent casing damage, since compaction is expected to be small due to reinjection of brine into the formation. Where slotted liners are used without a gravel pack, results may be less accurate. If the ground/liner adhesion is poor, it is still possible to measure the average compaction between the end of the last cemented string and the bottom of the hole. The use of at least slotted liner in the producing zone is desirable because markers can be conveniently and reliably incorporated into the couplings. For monitoring in unlined production zones, the only viable system appears to be the use of a triple sensor gamma-ray detector probe with radioactive markers shot into the formation.

In-Situ Calibration: The distance between the sensors is considered to be a know quantity for analysis purposes. Downhole temperature must be measured in the probe body so that the distance between sensors, measured at the surface, can be corrected for temperature-induced changes in probe length in the well. Once this value is determined, the distances between markers can be scaled from the strip chart record, as shown in Figure 2.4 of Section 2. This method makes the assumption that the probe velocity is constant between adjacent markers. This assumption seems to be acceptable.

Insulation and Refrigeration: One of the first research priorities will be to determine if insulation and refrigeration can be used to maintain a constant temperature of 100°C or less in the probe's instrument chamber. This would simplify circuit design of many signal conditioning equipment elements. However, the basic sensors, such as the coils of the induction sensor or the reed switches, still may have to be outside the insulation and exposed to 300°C in order to have adequate sensitivity.

3.2.2 Triple Sensor Induction Sensor Probe

This instrument uses a probe containing three induction sensors. The casing couplings serve as markers and are detected by the probe; refer to Figure 3.1a. Induction sensors are promising because marker degradation with time is not likely to be a problem and because design of the sensors appears feasible with high temperature materials and components. Casing

collar locators, a similar instrument which operates on the induction principle using a permanent magnet in lieu of an exciter coil, have been used successfully in several subsidence monitoring programs in oil and gas wells at lower temperatures (Allen,1969; deLoos, 1973).

The Sensors: Induction sensors used for geophysical logging typically consist of an exciter and a pick-up coil. The exciter coil induces eddy currents in the well casing. The eddy currents in turn induce an alternating voltage in the pick-up coil. The phase of this signal is shifted from that of the exciter coil. The phase shift is transmitted to the surface by appropriate signal conditioning equipment (Fig. 3.1b).

The coupling between the exciter and pick-up coils depends on the metal thickness, its magnetic permeability, its electrical resistivity and the gap between the sensor and the metal. With suitable centering devices, the last factor is kept constant. A typical signal from a casing log is shown on Figure 3.1c.

The Markers: The casing couplings (collars) serve as markers. The increased thickness of metal at the coupling is detected by the induction sensor. At Gronigen (deLoos, 1973), it was found that certain coupling designs give sharper signals than others. For subsidence monitoring, slip couplings are recommended. It is probable that the thickness of metal necessary to give such couplings adequate strength would also provide a good signal though the signal shape may change as the coupling telescopes during subsidence.

Development Needs: Current induction sensors are not designed to operate at 300°C. Because of the decreased magnetic permeability of coils and the inceased resistivity of the well casing at these temperatures, some consideration will have to be given to adequate coupling of the coils via the well casing without direct coupling. Downhole signal conditioning typically includes an oscillator for the exciter coil and electronics to amplify and transmit the pick-up coil signal by modulating a suitable carrier. The signal conditioning equipment can probably be designed with high temperature components.

The signal conditioning equipment must be designed to provide a clear signal even if corrosion or scaling occurs. Induction sensors detect loss of metal as well as casing collars. Severe corrosion may make it difficult to identify the signal due to the casing collars, as shown in Figure 3.1d. A signal conditioning system, which transmits a 0-1 signal where 1 represents an event above a certain threshold value, is probably not recommended here. The risk is that a deeply corroded zone might register as an event. A related problem is caused by scaling. A coating of low permeability high resistivity scale may reduce the coupling between the exciter and pick-up coils and lessen the sensitivity of the system.

3.2.3 Triple Sensor Reed Switch Probe

This instrument system uses a probe containing three reed switch sensors. Magnet markers installed downhole are detected by the probe. Refer to Figure 3.2a. Reed switch sensors are promising because no downhole signal conditioning is required and the output is an "on-off" signal as a marker is crossed.

The Sensor: Reed switches are made of two thin reeds of high magnetic permeability in an evacuated glass housing (Figure 3.2b). In the presence of a magnetic field, the reeds contact and close an electrical circuit. The reed switches thus provide an on-off signal. No downhole signal conditioning is necessary. The position of the reed switch (open or closed) may be detected at the surface by current measurement. However, if stray currents are a problem, the 0.1 amp allowable current through a reed switch may be hard to detect. In that case reflectometry may be used by monitoring the phase change between open and closed positions of the switch. A temperature sensor must also be included in the probe to determine its length.

The Markers: Rare earth or possibly Alnico magnets may be used. They require non-magnetic stainless steel (annealed) backing to concentrate flux in the center of the ring, minimizing flux through the well casing. The magnets may be factory installed in (slip) couplings (Fig. 3.2c). To reduce the reluctance between the magnet and the reed switch, expendable leaf springs and a core of soft iron may be incorporated into the probe (Figure 2.2d).

Development Requirements: The key development is to determine whether existing reed switches will close at 300°C. If not, a suitable reed switch can probably be developed. Factors in the development process may include selection of a high permeability material suitable for reeds at 300°C, selection of a non-magnetic housing with expansion characteristics compatible with the reed material, and design of a seal between the reeds and housing.

Rare earth magnets have adequate magnetic strength at this temperature. A suitable housing which can be welded to a well casing coupling must be designed which minimizes flux in the casing, protects the magnet from corrosion and from mechanical damage, and prevents corrosion between the magnet and its housing and between the housing and the coupling materials.

3.2.4 Triple Sensor Oscillator-Type Magnet Detector System

This instrument system uses a probe containing three oscillator-type magnet detectors. Magnet markers installed downhole are detected by the probe. Refer to Figure 3.3a. This system offers promise because it is more sensitive than a reed switch and thus more likely to give a good signal at 300°C, at which sensitivities of all magnetic systems are reduced. Its simple circuitry can probably be constructed from high temperature components and the frequency output is good for transmission over long electrical leads.

The Sensors: An oscillator using a saturable core reactor can detect small changes in a magnetic field. This sensor type is much more sensitive than a reed switch, increasing the probability that it will operate at 300°C, at which all magnet detectors decrease in sensitivity.

The oscillator is formed from two transistors and an inductor with a high permeability core of μ metal (Figure 3.3b). The transistors come into play so that the frequency of the oscillator is proportional to the time required to saturate the core of the inductor. An external magnetic field will speed up or decrease the saturation rate and consequently a frequency change occurs. This frequency is directly related to the magnetic field strength along the inductor's longitudinal axis.

The Markers: Rare earth or possibly Alnico magnets incorporated into couplings are suitable, as discussed in Secton 3.2.3.

Development Requirements: Further research is required to assess the performance of μ-metal at 300°C. Newer alloys (such as HyMu-80) may be superior. Temperature alone will cause a frequency shift and its effect on the accuracy of marker detection must be assessed. The main components of the basic circuit and signal conditioning equipment can probably be developed from high temperature components, such as those listed in Table 2.20. To improve the sensitivity of the detector, the use of a soft iron probe core and leaf springs as discussed in Section 3.2.3 should be evaluated.

The problems of magnetic marker design also require consideration, as discussed in Section 3.2.3.

3.2.5 Triple-Sensor Gamma Ray Detector System

This instrument system uses a probe containing three gamma ray detectors. Radioactive markers installed downhole are detected by the probe. Refer to Figure 3.4a. This system has been used by several researchers and in particular was refined to a high accuracy in the Netherlands (deLoos, 1973) for use in gas wells. It offers promise because it may be used in both cased and unlined holes and because the radioactive markers require no special shielding, as do the magnets, for use in steel casing.

The Sensors: Conventional modern gamma ray detectors use scintillation counters with photomultiplier tubes or semiconductor crystals. These are unlikely to operate at geothermal temperatures. In fact, the refinements provided by such counters (i.e., an exact particle count) is unnecessary. A signal indicating the presence of a radioactive source is all that is needed. The Geiger-Muller (G-M) tube (Figure 3.4b), commonly used before 1950, may be adaptable to high temperature use. When a radioactive particle enters this device, the gas inside the tube is ionized. The ionized gas allows current to flow between a thin wire at the center of the tube and the outer shell under an applied voltage of around 800 volts. Current will continue to flow unless the discharge is suppressed or "quenched." Once quenched, the G-M tube is ready to detect the next gamma ray. Since, for settlement measurement, an exact count of the radiation particles is

not needed, self-quenching types should be adequate. These contain a gas which is decomposed using energy that otherwise would have caused emission of electrons. The dimensions of the G-M tube should be selected so the tube intercepts enough γ-rays as each marker is passed to produce a clear signal.

The Markers: Radioactive bullets made of cobalt-60 (3-6 μCuries; Sano, 1969) or Cesium 137 (100 μCuries; deLoos, 1973) have been shot into the formation around a cased well using a perforating gun. This technique is necessary if the hole is unlined. Radioactive bullet placement should be shallow to maximize signal strength, but deeper penetration will be needed in unlined holes and in boreholes with uncemented casing compared to cemented casing because of the possibility of wall slump. Radioactive markers have also been welded as "buttons" to casing (Sano, 1969). In cased holes, the best approach may be to weld such buttons to the inside of casing couplings, prior to installation. Radioactive matierals require special handling and precautionary procedures for all field and shop personnel.

Development Requirement: The development of a G-M tube is probably more difficult than the development of the previously discussed sensors. In particular, ionizing and quenching gases must perform their functions over 20°-300°C. The associated signal conditioning equipment (Figure 3.4c) can probably be designed from high temperature components.

The radioactive markers must be safe to handle in the field while providing an adequte signal. The radioactive material must be bound so that it resists corrosion and subsequent diffusion. In unlined holes, bullet penetration may be a problem. Consideration should be given to bullet configuration and gun design so that a uniform penetration can be achieved in all formations. The optimum penetration, adequate to embed the bullet securely while providing a clear signal, should also be assessed.

TABLE 3.1

MODIFIED RATING SYSTEM

CATEGORY	RATING		
	3	2	1
WORKING DEPTH	Greater than or equal to 3 km	3 km to 300 m	less than 300 m
ABILITY TO MAKE INTERVAL MEASURE-MENT	Many intervals in one hole	2 to 5 intervals in one hole	More than one hole required
RELATIVE SENSITIVITY TO GROUND MOVEMENT	Sensitive to movement over short intervals (100 m or less)	Sensitive to movement between widely spaced reference points (>100 m)	Distance between markers may not be representative of ground movement
NEED FOR CASING MODIF-ICATIONS	Slip couplings or bellows sections only	Auxiliary casing	Auxiliary casing with special inserts
OPERATION REQUIRE-MENTS	No access to well required	Requires special fittings at surface; some interference with fluid production during readout	Substantial interference with well operation for readout; well may have to be taken out of production for monitoring use
DEVELOPMENT REQUIREMENTS DUE TO TEMPERATURE	Current design functions at 300°C	High temperature components avail-able to construct most of system; Development of remaining compo-nents promising	As 2, but significant developmental work required for certain components
SCALING AND CORROSION POTENTIAL	No mechanical parts exposed. No parts sensitive to corro-sion downhole	Wheels or moving parts on tempo-rary probes; downhole magnets used	Permanent downhole mechanical probe parts or casing parts
DOWNHOLE ELECTRONICS	None	Minimal	Downhole signal conditioning required

TABLE 3.2
INSTRUMENT SYSTEM RATING MATRIX

REFERENCE	INSTRUMENT	CASING TYPE	TOTAL	WORKING DEPTH	INTERVAL MEASUREMENT ABILITY	RELATIVE SENSITIVITY TO GROUND MOVEMENT	NEED FOR CASING MODIFICATIONS	OPERATION REQUIREMENTS	DEVELOPMENT REQUIREMENTS DUE TO TEMPERATURE	SCALING/CORROSION POTENTIAL	DOWNHOLE ELECTRONICS
INTERIM REPORT NO. 1	PIPE TYPE BOREHOLE EXTENSOMETER (Anchored by Own Weight, Attached Wire at Surface with Water Level Recorder Readout)	a	16	2	1	2	3	1	3	1	3
	TRIPLE-SENSOR INDUCTION SENSOR PROBE (with Casing Collar Markers)	a	16	2	3	1	3	2	2	3	1
	TRIPLE-SENSOR GAMMA-RAY DETECTOR PROBE (with Radioactive Bullet Markers)	a	16	2	3	1	3	2	1	3	1
	SINGLE-SENSOR REED SWITCH PROBE (with magnet markers)	a	15	1	3	1	3	2	1	2	2
INTERIM REPORT NO. 2	TRIPLE-SENSOR INDUCTION SENSOR PROBE (with Casing Collar Markers; modified)	b	19	3	3	3	2	2	2	3	1
	TRIPLE-SENSOR GAMMA-RAY DETECTOR PROBE (with Radioactive Markers; modified)	b	18	3	3	3	2	2	1	3	1
	TRIPLE-SENSOR REED SWITCH PROBE (with magnet markers; modified)	b	18	3	3	3	2	2	1	2	2
INTERIM REPORT NO. 4	MULTISENSOR REED SWITCH PROBE (with magnet markers; in modifed well casing)	b	16	3	3	3	2	2	1	1	1
	MULTISENSOR REED SWITCH PROBE (with magnet markers; in simple auxiliary casing)	c	16	3	3	3	1	3	1	1	1
	TRIPLE-SENSOR OSCILLATOR-TYPE MAGNET DETECTOR PROBE (with markers; in modified production casing)	b	18	3	3	3	2	2	2	2	1

KEY (a) - unmodified casing
(b) - casing with slip couplings or bellows sections
(c) - auxiliary casing

TABLE 3.3 - GENERAL SPECIFICATIONS FOR SELECTED INSTRUMENT SYSTEMS

ITEM \ INSTRUMENT SYSTEM	3-Sensor Induction Probe	3-Sensor γ-Ray Detector Probe	3-Sensor Reed Switch Probe	3-Sensor Oscillator-Type Magnet Detector Probe
Transducer	Induction Sensor	G-M tube	Reed Switch	Oscillator-Type Magnetometer
Location of Transducer	3 in Probe at 0, 10 and 15 m from end	3 in Probe at 0, 10 and 15 m from end	3 in Probe at 0, 10 and 15 m from end	3 in Probe at 0, 10 and 15 m from end
Marker	Casing Collars	Radioactive Bullets on Collars or Shot into Formation	Magnets on Casing Collars	Magnets on Casing Collars
Other Instruments in Probe	Temperature Sensor	Temperature Sensor	Temperature Sensor	Temperature Sensor
Accuracy of System[1]	± 5mm over 30m interval	± 5mm over 30m interval	± 5mm over 30m interval	± 5mm over 30m interval
Temperature[1] Capability	0-300°C	0-300°C	0-300°C	0-300°C
Pressure[1] Capability	to 300kg/cm^2	to 300kg/cm^2	to 300kg/cm^2	to 300kg/cm^2

[1]For non-geopressured area use; these are recommended short-term goals.

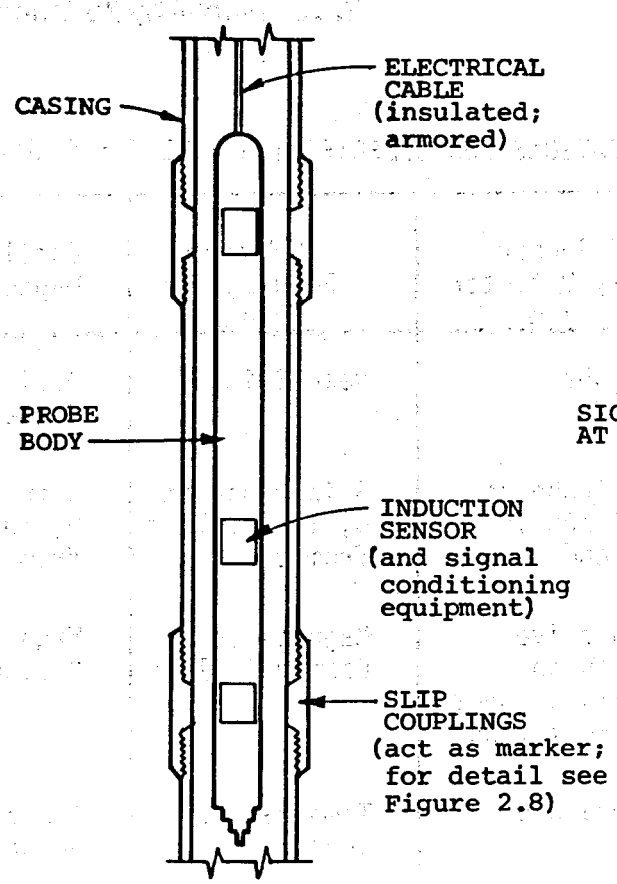

a) INDUCTION SENSOR PROBE SYSTEM

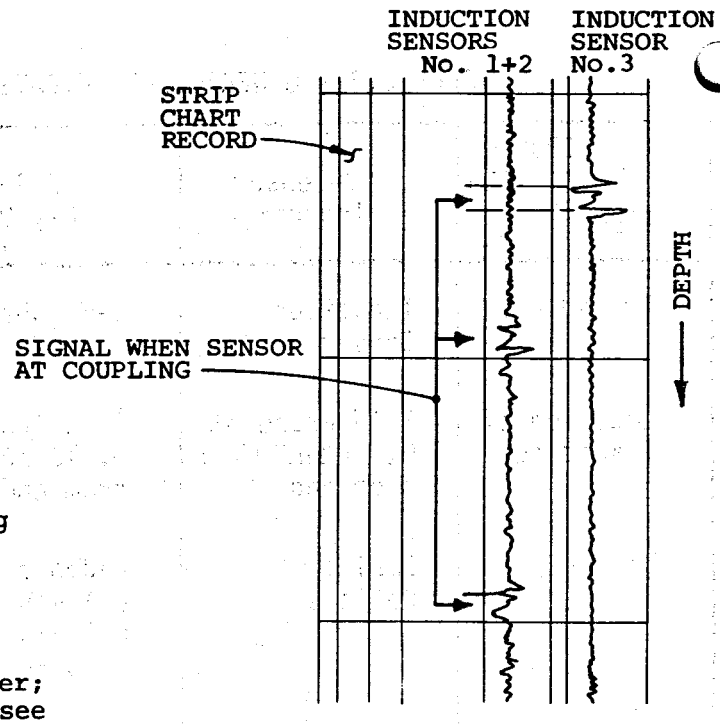

c) OUTPUT FROM TRIPLE SENSOR INDUCTION PROBE (de Loos, 1973)

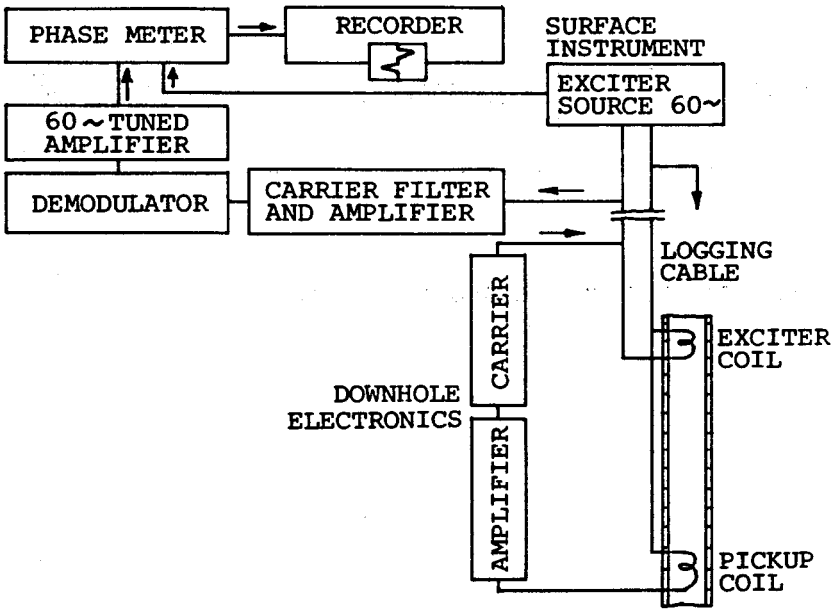

b) DIAGRAM OF INDUCTION SENSOR ELECTRONICS (Edwards & Stroud, 1964)

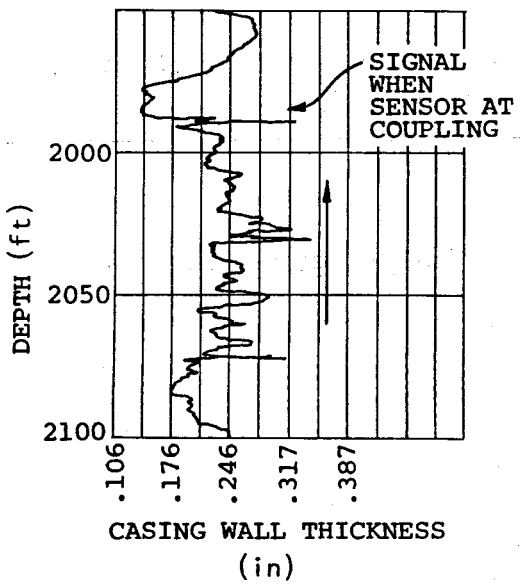

d) OUTPUT FROM SINGLE INDUCTION SENSOR IN CORRODED CASING (Edwards & Stroud, 1964)

Figure 3.1 - TRIPLE SENSOR INDUCTION PROBE METHOD

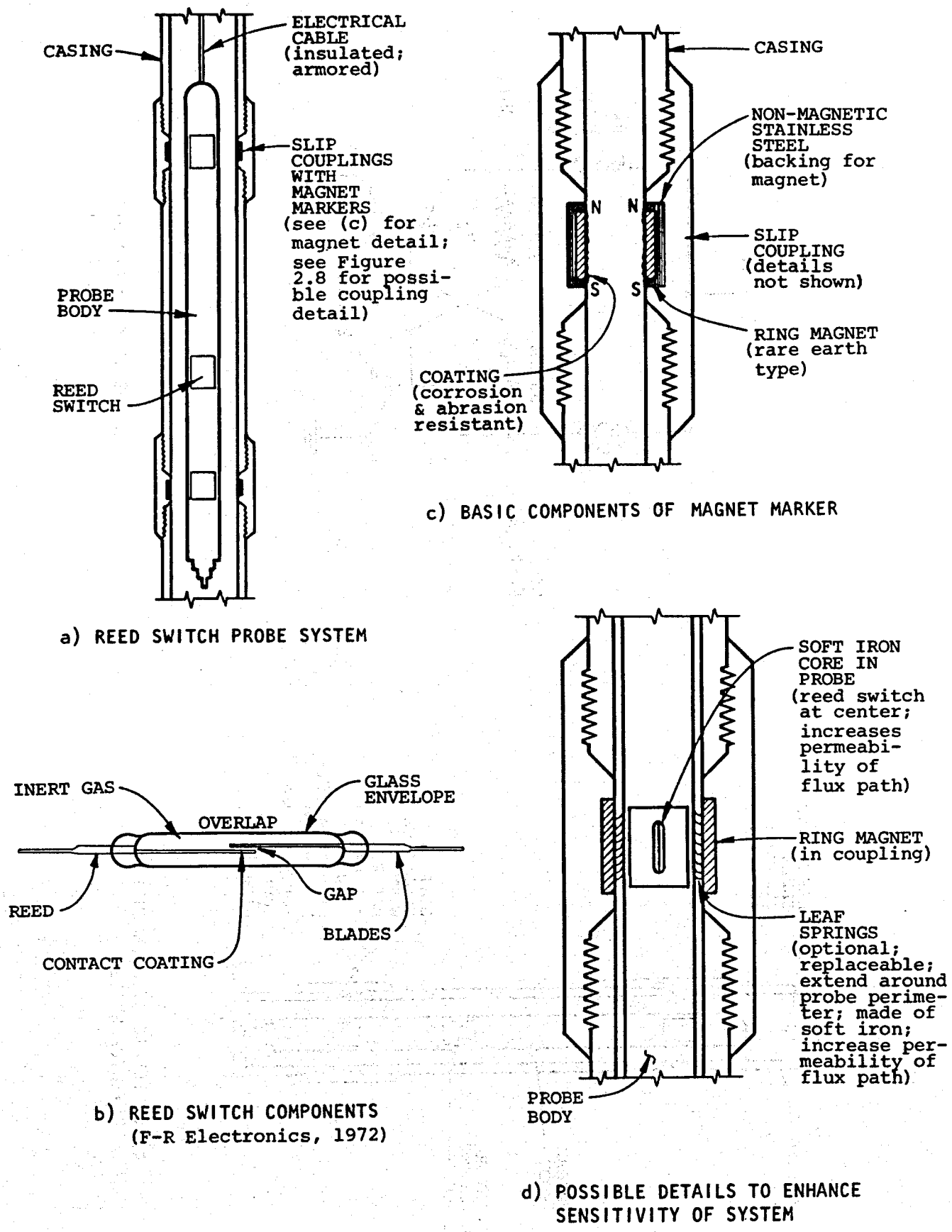

Figure 3.2 - TRIPLE SENSOR REED SWITCH PROBE METHOD

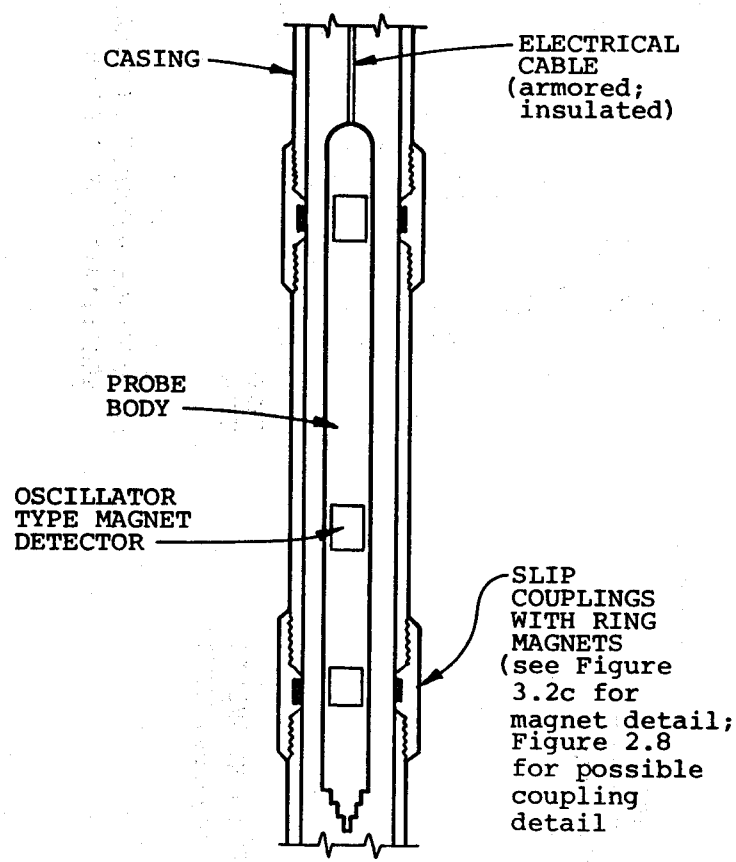

a) OSCILLATOR-TYPE MAGNET DETECTOR SYSTEM

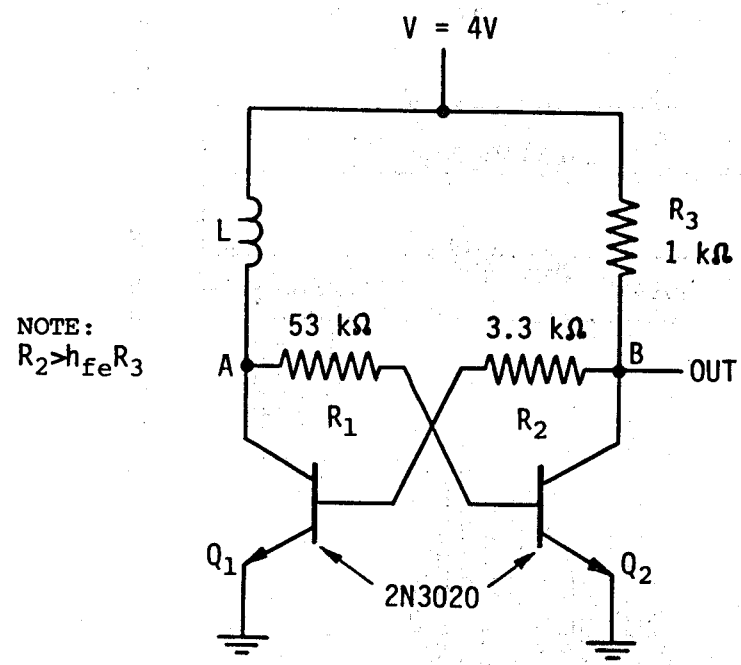

b) OSCILLATOR CIRCUIT (Nair, 1977)

Figure 3.3 - TRIPLE SENSOR OSCILLATOR-TYPE MAGNET DETECTOR METHOD

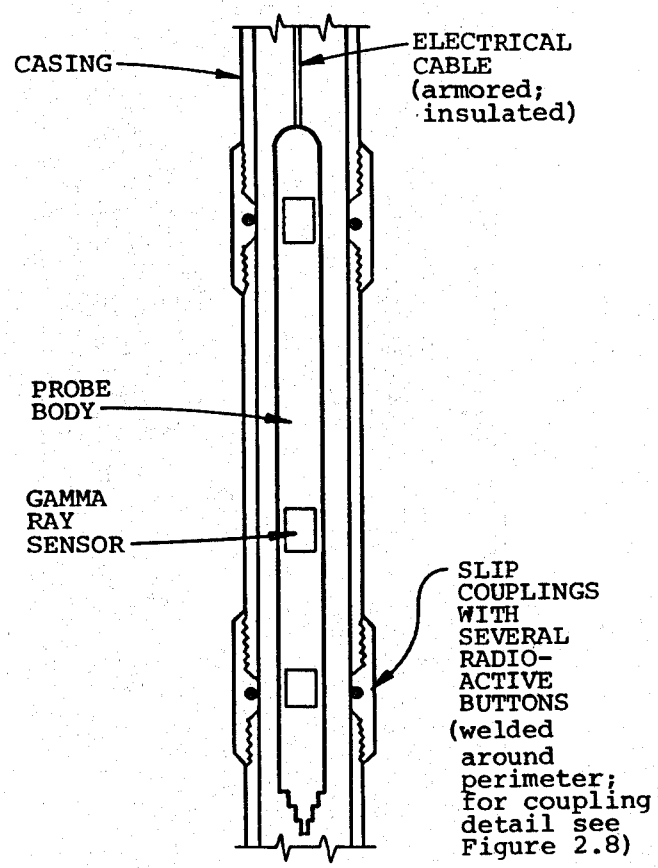

a) GAMMA RAY SENSOR PROBE SYSTEM

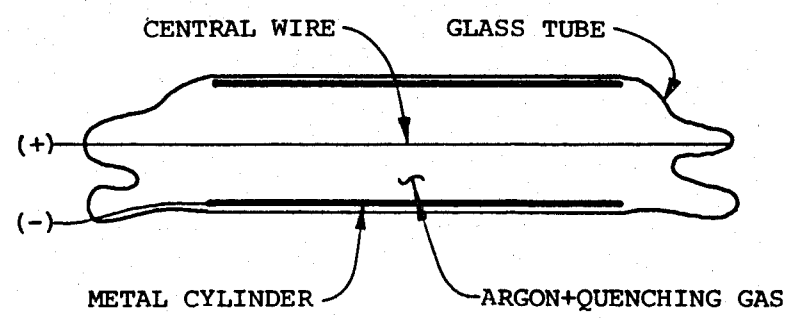

b) GEIGER-MULLER TUBE (after Glasstone, 1950)

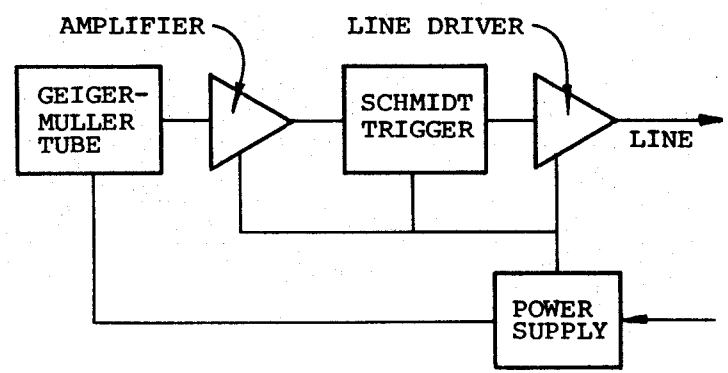

c) DOWNHOLE ELECTRONICS

Figure 3.4 - TRIPLE SENSOR GAMMA RAY DETECTOR METHOD

4.0 RESEARCH PRIORITIES

4.0 RESEARCH PRIORITIES

The first step toward the development of an instrument to monitor geothermal subsidence was undertaken with this research project (Geothermal Subsidence Research, Category 3, Project 1). With completion of this fifth and final report, we have assessed monitoring needs, reviewed relevant technology and selected four instrument systems for further development. These instrument systems, for monitoring vertical displacements above and within a geothermal reservoir, are presented in conceptual form in Section 3.0. The instrument designs include tested techniques and new technology from many disciplines, including electronics, materials science, geophysics, and the petroleum industry. Further development work is needed to determine which of the four instruments should be advanced to the prototype construction phase. This section discusses research strategies that will result in a working subsurface compaction monitoring instrument.

4.1 PROPRIETARY INFORMATION

Development of geothermal technology has been hampered by the limited market for it. According to a forecast developed by the Mitre Corporation (1978):

> "The number of geothermal wells ... does not exceed 2000 in any year prior to 1990, and it does not exceed 500 before 1985. Compared to the 40,000-plus oil and gas wells now drilled annually in the U.S., the perceived market is likely to be too small to motivate industry to undertake major research, development and demonstration on its own in the near term. Government participation to accelerate the pace of geothermal specific well technology therefore appears justified."

Unfortunately, to date much of the research in the private sector, particularly with respect to scaling research and well logging technology, is proprietary. The authors of this report feel that if the government underwrites the development of geothermal subsidence monitor tools, it should be on a non-proprietary basis. Modifications and field testing can be performed more easily, and geothermal measurement technology can be advanced more quickly. The manufacturing and bench testing for instrument development should be open to any qualified precision mechanical or electrical fabricator, including well-logging service companies with manufacturing facilities.

No patentable items have been developed as a result of this study. However, if these conceptual instruments can be carried through to the prototype stage, patents may be possible. We feel that progress in geothermal well technology will be facilitated if the government owns all patents for which it financed the research.

4.2 POTENTIAL RESEARCHERS

Figure 4.1 proposes a management structure, based on the assumption that instrument development will proceed under the overall management of Lawrence Berkeley Laboratory under the Geothermal Subsidence Research Program. A key feature of the management plan is the use of a geotechnical/subsidence engineering consultant to ensure that a workable, accurate subsidence monitoring system results from the research efforts of all the subcontractors. The roles of researchers with expertise in (1) geotechnical/subsidence engineering, (2) geophysical instrumentation engineering, and (3) geothermal well and production engineering are discussed below.

Geotechnical/Subsidence Engineer - Technical evaluation of research to ensure that the goals of the research program are being achieved is crucial to the successful development of a downhole compaction monitoring system. Civil engineers traditionally have managed technical projects involving other disciplines, such as mechanical and electrical engineering. With respect to the objective of developing a monitoring tool, geotechnical/civil engineers are experienced in the measurement of interest to this project. They understand the limitations of various direct measurement techniques and how all the components of a monitoring system interact to provide accurate data. Further, through the geotechnical engineers, technology transfer to and from related research in mining and waste disposal is facilitated.

LBL has excellent technical expertise, but may have limited staff availability to provide technical coordination and guidance to all of the researchers involved. We recommend that LBL select a geotechnical/subsidence engineering consultant as a prime contractor to ensure that the research program achieves its objective of successful development of a compaction monitoring system (Figure 4.1). A more complicated but potentially satisfactory arrangement is shown in Figure 4.2 in which LBL manages all contractual arrangements and provides overall technical direction. The geotechnical/subsidence engineering consultant is responsible for day-to-day technical coordination, essentially in the role of an LBL staff member, to achieve the project goals.

Geophysical Instrument Specialists - Development of a probe can probably best proceed under the direction of an organization experienced in geophysical instrumentation (e.g., Sandia Labs, Schlumberger, etc.). Because of the many technologies involved, including mechanical, electrical and materials engineering, they may find it appropriate to contract out portions of the work. Well logging companies should be involved in the development work because they are experienced in the costly and tricky procedures for running sensitive instruments through thousands feet of borehole. They also have support equipment for field operations, some of which may be directly and economically useful to the present project.

Geothermal Well and Production Engineering - A probe is only one component of a compaction monitoring system. Successful instrument system operation may require specialized couplings or casing, bullet-type markers, well head access glands, and means for controlling downhole scaling and corro-

sion. Development of components for permanent downhole or wellhead application might best proceed under overall supervision of a petroleum/geothermal engineer experienced in all phases of drilling and well completion. This management role could be filled by an energy (oil/geothermal) company or possibly a national laboratory such as Sandia or Los Alamos. Because of the wide variety of downhole and wellhead needs, several subcontractors may be involved, including designers and fabricators of tubing and couplings (e.g., Hydril, NL Atlas, etc.), well completion fluid suppliers, and well head assembly manufacturers.

4.3 STRUCTURE OF FUTURE RESEARCH

We recommend that future work be divided into two principal contracts (see Figure 4.3). In Project 2, the first of the two contracts, the four recommended instrument systems will undergo laboratory testing and development. From those results the most promising system will be selected for field testing in Project 3.

4.3.1 Project 2 Research - Laboratory Testing

This project comprises laboratory tests of the four key systems identified earlier in this report. The testing will evaluate materials, casing and coupling desing, sensor and signal conditioning design, and capabilities and other key features of the four candidate geothermal subsidence monitoring systems.

The project will require several areas of expertise. As noted in Section 4.2, it is recommended that the prime contractor be a firm experienced in geotechnical or subsidence engineering and monitoring. The prime contractor will coordinate the research in Project 2 and provide continual feedback to the subcontractors on the appropriateness of their findings to subsidence monitoring. Two main subcontractors will probably be required, as discussed in Section 4.1, one for probe development and one for well and logging equipment development. In the scheduling of probe development, it is recommended that research on the mechanical components begin six months in advance of the research on the electrical components because the capabilities of insulation and refrigeration systems will influence sensor development. In evaluating the sensor components, initial testing should determine the one most promising sensor type of the four recommended and further work should focus on improving probe performance. While probe development is underway, concurrent well and logging component development will concentrate on the design of slip couplings, wellhead access glands, and logging cables. Overall, Project 2 should identify one of the four instrument systems and design, test and modify components to the point where a working field tool can be constructed in Project 3.

The use of consultants by both the prime and subcontractors should be encouraged. For example, in the probe development subcontract, it is unlikely that one company has expertise in reed switch construction, hybrid circuit design and magnet technology together. However, it would probably be inefficient and cumbersome to award each of these study areas as separate contracts. Similarly, it may be useful for the prime contrac-

tor to retain one or two consultants with expertise in oil well drilling and geothermal well operation. These consultants would advise on potential problems, operational requirements, and degree of acceptance by the geothermal industry for the proposed instruments systems.

At the completion of Project 2, the most promising instrument system from among the four tested will be selected for field testing in Project 3.

4.3.2 Project 3 Research, System Construction and Field Testing

In this project, a full scale subsidence monitoring instrument system will be developed and tested. As in Project 2, the project work should be the responsibility of a single prime contractor, who should be experienced in geothermal or subsidence engineering and instrumentation. The function of the prime contractor is primarily inspection, coordination and administration. He will also be responsible for approving design changes as needed. The body of work for the project can be divided into three parts, as follows: (1) construct a prototype instrument, (2) concurrently furnish and install modified well casing and related equipment, and (3) then field test the prototype instrument system.

Before the letting of the subcontracts, an agreement with a geothermal operator must be obtained. The agreement will include the consent of the operator to install in a production drill hole modified casing furnished by the contract and permission to use the well for materials testing, monitoring, and probe testing for approximately two years.

The geothermal operator may a commercial venture or an experimental private or institutional operator under contract to a government agency, such as the national test site at East Mesa in the Imperial Valley of California. A cooperative agreement permitting the modified casing installation might be arranged in principle by LBL, with installation and cost details to be negotiated between the prime contractor for Project 3 and the geothermal operator, subject to approval by LBL. To allow for negotiating flexibility, it might be well to have more than one candidate geothermal operator available.

4.4 ANTICIPATED COSTS AND TIME FOR INSTRUMENT DEVELOPMENT

It is expected that the development of a working subsidence monitoring system may cost about $625,000, as follows:

PROJECT 2	- Design and Laboratory Test Well and Logging Components	$150,000	
	- Design and Laboratory Test Probe Components	200,000	
	- Management	60,000	
	- Subtotal Project 2		$ 410,000

PROJECT 3 - Construct Prototype Instrument	200,000	
- Furnish and Install Modified Well Casing[1]	150,000	
- Field Test Prototype Instrument System	200,000	
- Management	80,000	
- Subtotal Project 3		630,000
- Total Development Costs		$1,040,000

All costs presume that full advantage will be taken of all geothermal research efforts in related areas, so that the basic research for this project will be very specific and consequently not too costly.

Project 2 will take 1 year to 15 months to complete. Project 3 will take an additional 15 months to 2 years to complete. Its scheduling will depend on the availability of a geothermal well installation for field testing. These costs and schedule do not include verification of instrument ability to resist environmental damage and to monitor ground movements over a long-term monitoring program.

[1]Cost of modifications only

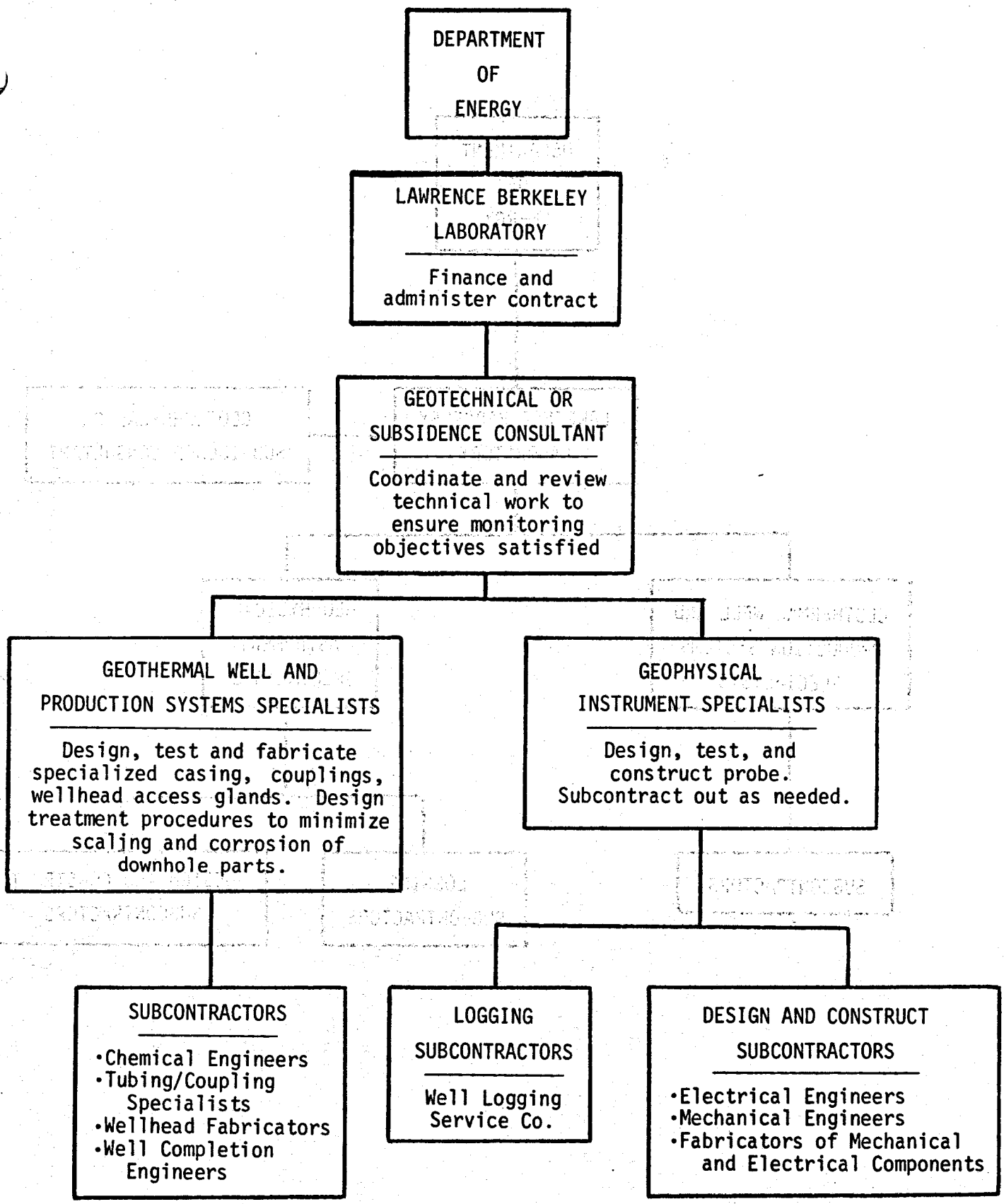

Figure 4.1 - RECOMMENDED MANAGEMENT STRUCTURE FOR SUBSIDENCE TOOL RESEARCH

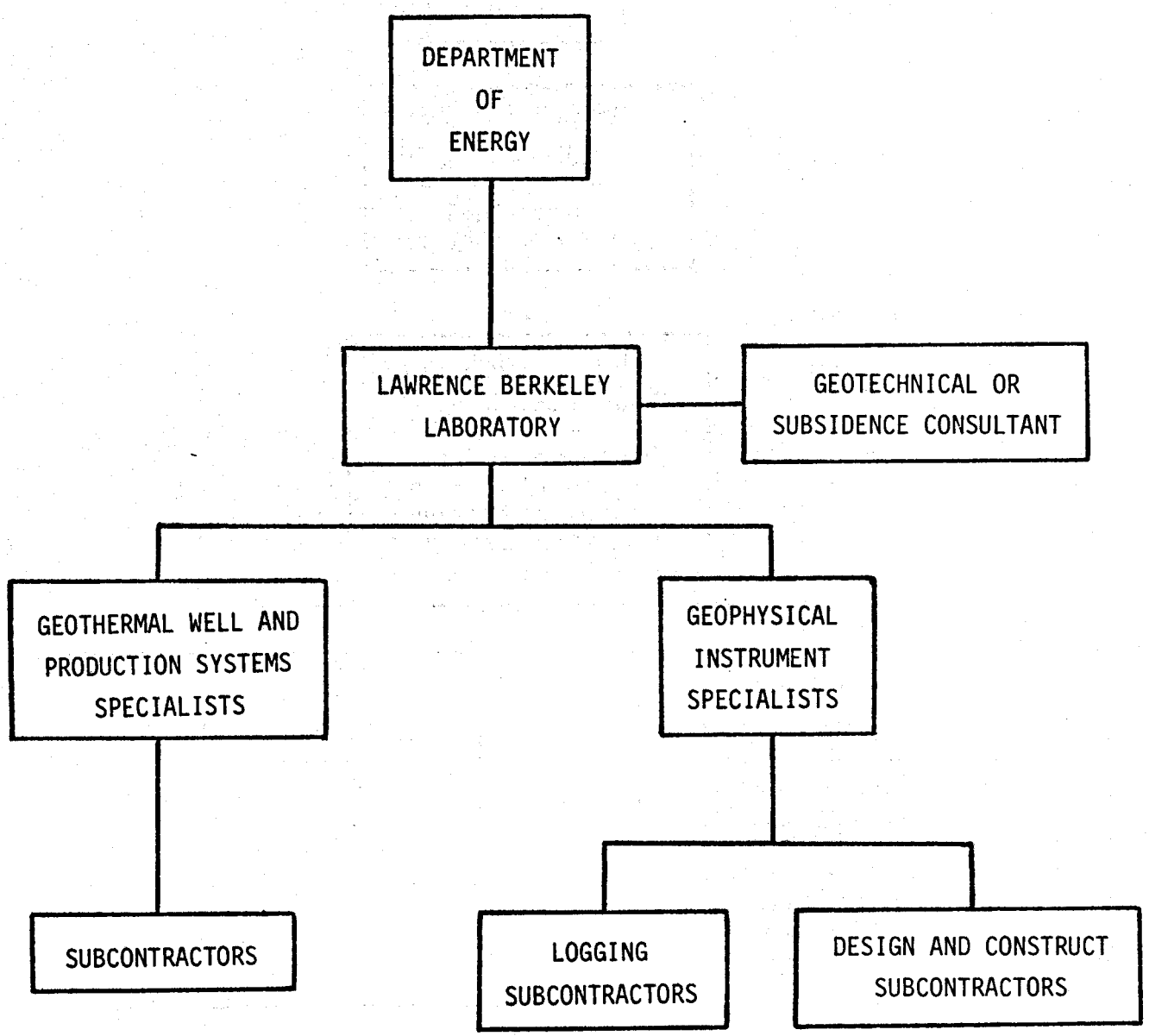

Figure 4.2 - ALTERNATE MANAGEMENT STRUCTURE FOR SUBSIDENCE TOOL RESEARCH

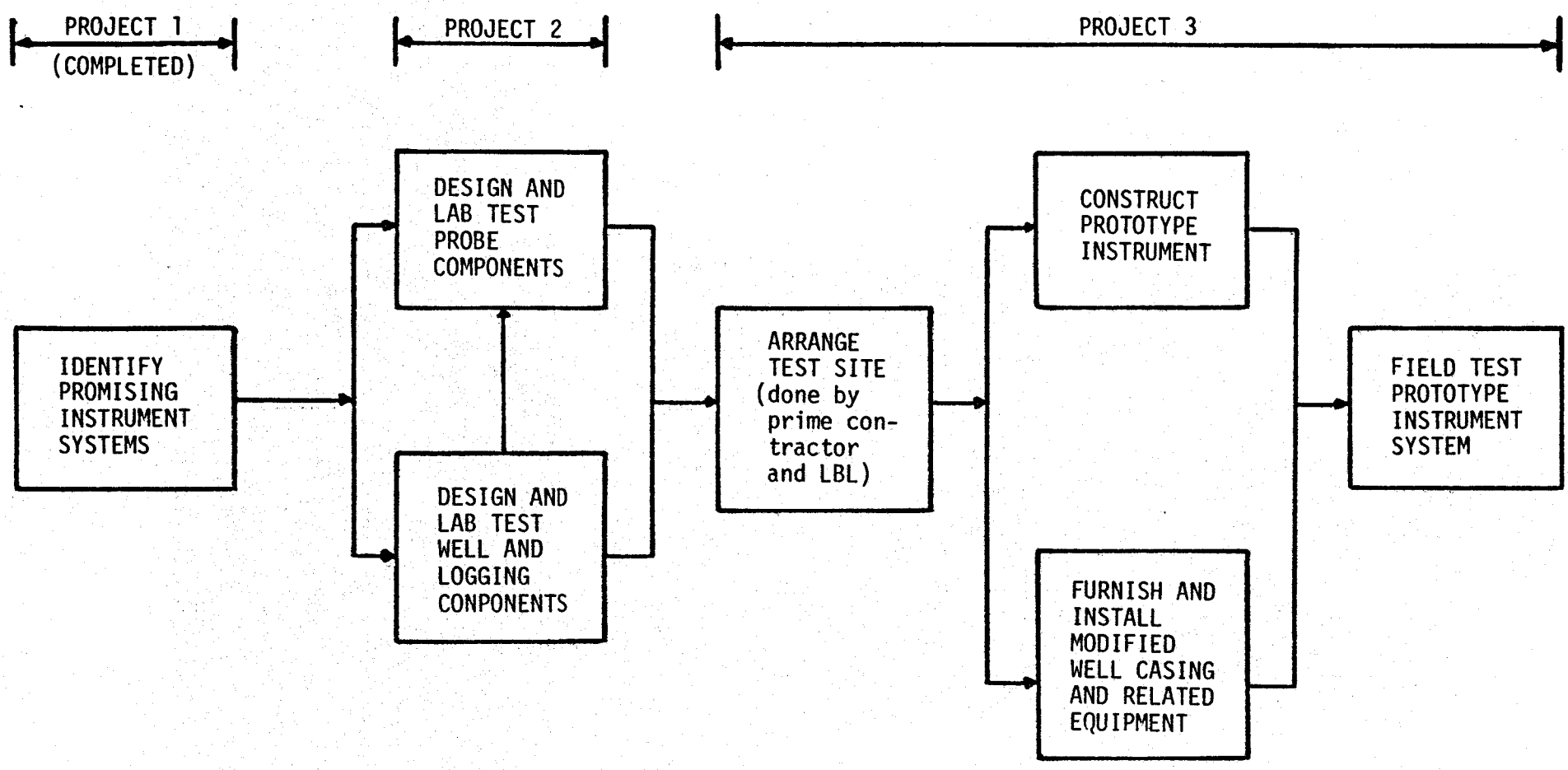

Figure 4.3 - OUTLINE OF PROPOSED GEOTHERMAL SUBSIDENCE RESEARCH - (CATEGORY 3)

5.0 REFERENCES

REFERENCES

Abrams, M. S., 1973, Compressive strength of concrete at temperatures to 1,600F: Portland Cement Association, Research and Development Bulletin RD016, 11 p.

Ailtech 1975, Strain Gage Products: City of Industry, CA 91748.

Allegrini, G., and Benvenuti, G., 1970, Corrosion characteristics and geothermal power plant protection: UN Symposium on the Development and Utilization of Geothermal Resources, Pisa, in Geothermics, Special Issue 2, v. 2, pt. 1, p. 865-881.

Allen, D. R., 1969, Collar and radioactive bullet logging for subsidence monitoring: SPWLA Tenth Annual Logging Symposium, p. G1-G19.

Allen, D. R., 1973, Oil field subsidence--susceptibility and monitoring techniques: presented to American Association of Petroleum Geologists Annual Meeting.

Allen, D. R., 1968, Physical changes of reservoir properties caused by subsidence and repressuring operations: Journal of Petroleum Technology, January, 1968, p. 23-29.

Allen, D. R., 1971, Update on collar and radioactive bullet logging for subsidence monitoring: unpublished, City of Long Beach, 5 p.

Allen, D. R., 1977, Personal communication: Department of Oil Properties, City of Long Beach, California.

Altseimer, J. H., 1975, Geothermal well technology and potential application of subterrene devices - a status review: Second U.N. Symposium on the Development and Use of Geothermal Resources, Proceedings, San Francisco, v. 2, p. 1453-1470.

Aluminum Association Inc., 1976, Aluminum standards and data -- 1976: the Aluminum Association, New York, 212 p.

American Society for Metals, 1977, Metal Progress 1977 Databook: Metal Progress, v. 112, no. 1, Mid-June 1977, 186 p.

Anon, 1978, Weigand Effect: A New Pulse - Generating Option: Automotive Engineering, February, p. 44-48.

Anon, 1977, Weigand Pulses break through into new applications: Canadian Controls and Instrumentation, December, p. 16-19.

ASHRAE, 1966, ASHRAE guide and handbook - fundamentals and equipment: American Society of Heating, Refrigerating and Air-Conditioning Engineers, New York, p. 1-28.

Atherton, R. W., Finnemore, E. J., Gillam, M. L., DeGance, A. E., Nystrom, G. A., and Schainker, R. B., 1976, The analysis of subsidence associated with geothermal development: Volume I-Handbook, and Volume II-Research Report: Systems Control, Inc., Palo Alto, California, Reports 5139-1 and 5139-2.

BLH Electronics, 1977, Brochures: Waltham, MA 02154.

Babor, J. A., and Lehrman, A., 1954, Introductory College Chemistry: Thomas Y. Crowell Co., New York, 814 p.

Bacon, C. F., 1976, Blowout of a geothermal well: California Geology, v. 29, no. 1, p. 13-17.

Bailey, E. E., 1974, Strain gauges--what they are and their uses: Chartered Mechanical Engineer, v. 21, no. 8, p. 103-107.

Baker, L. E., Baker, R. P., Hughen, R. L., 1975, Report of the geophysical measurement in geothermal wells workshop - September 1975: Sandia Laboratories, Albuquerque, N.M., SAND 75-0608, 69 p.

Baker, L. E., Campbell, A. B., and Hughen, R. L., 1975a, Geothermal well logging - an assessment of the state of the art: The Log Analyst, v. 16, n. 6, p. 21-24.

Baker, L. E., Campbell, A. B., Hughen, R. L., 1975b, Well-logging technology and geothermal applications - a survey and assessment with recommendations: Sandia Laboratories, Albuquerque, N.M., SAND 75-0275, 75 p.

Barnes, H. L., and Rimstidt, J. D., 1976, Chemistry of silica scale formation: in Second Workshop on Materials Problems Associated with the Development of Geothermal Energy Systems, El Centro, California, May 1975, Bureau of Mines Open File Report 128-76, p. 1-14.

Barron, R., 1966, Cyrogenic systems: McGraw-Hill Book Co., New York, 678 p.

Batzle, M. L., and Simmons, G., 1976, Microfractures in rocks from two geothermal areas: Earth and Planetary Science Letters, v. 30, p. 71-93.

Belteky, L., 1975, Problems related to operating geothermal wells subject to scaling in Hungary: Geothermics, v. 4, no. 1-4, p. 57-65.

Bjerrum, L., Johannessen, I. J., and Eide, O., 1969, Reduction of Negative Skin Friction on Steel Piles to Rock: Seventh International Conference on Soil Mechanics and Foundation Engineering, Proceedings, v. 2, p. 27-34.

Bleakley, W. B., 1973, Here's how Shell solves Uinta basin problems: The Oil and Gas Journal: Feb. 5, p. 45-50.

Boyle, W. S., 1977, Light wave communications: Scientific American, v. 237, no. 2, p. 40-48.

Bradley, F. N., 1971, Materials for magnetic functions: Hayden Book Co., Inc., New York, 348 p.

Bromwell, L. G., Ryan, C. R., and Toth, W. E., 1971, Recording inclinometer for measuring soil movement: 4th Pan American Conference, San Juan, v. 2, p. 333-343.

Brookhaven National Laboratory, 1977, Alternate Materials for Construction for Geothermal Applications: Progress Reports 12 and 13, for DGE-ERDA, BNL 50699 and BNL 50665.

Brown, B. F., 1975, Environmentally assisted fracturing--research and standards: ASTM Standardization News, May, 1975, p. 8-16.

Budd, C. F., Jr., 1973, Steam production at the Geysers geothermal field, in Kruger, K., and Otte, C. (eds.), Geothermal energy: -- Resources, Production, Stimulation: Stanford University Press, Stanford, California, p. 129-144.

Bull, W. B., and Miller, R. E., 1975, Land subsidence due to ground-water withdrawal in the Los Banos-Kettlemen City area, California, part 1, changes in the hydrologic environment conducive to subsidence: U.S.G.S. Professional Paper 437-E, 71 p.

Burland, J. B., and Moore, J. F. A., 1973, The Measurement of Ground Displacement around Deep Excavations: Field Instrumentation in Geotechnical Engineering, Brihsh Geotechnical Society, Prooceedings, John Wiley & Sons, New York, p. 70-84.

Burland, J. B., Moore, J. F. A., and Smith, P. D. K., 1972, A simple and precise borehole extensometer: Geotechnique, v. 22, no. 1, p. 174-177.

Burleigh Instruments, Inc., 1979, Super Invar Data Sheet and Personal Communication: Burleigh Park, Fishers, N.Y.

Burns, R. M., and Bradley, W. W., 1955, Protective Coatings for Metals: Reinhold Publishing Corp., New York, 643 p.

Carlson Instruments, 1978, Brochures: Campbell, CA 95008.

Carpenter Steel Division, 1978, Brochure - Carpenter controlled - expansion alloys: Carpenter Technology Corporation, Reading, Pa.

Case, L. C., 1970, Water Problems in Oil Production -- An Operator's Manual: Petroleum Publishing Co., p. 23-36.

Chemical Rubber Co. (CRC), 1966, Handbook of chemistry and physics: The Chemical Rubber Co., Cleveland, Ohio, 47th ed.

Chen, Y. K., 1975, Chemistry, fate, and removal of trace contaminants from low and medium salinity geothermal waters: Presented to meeting of principle investigators of geothermal projects funded by National Science Foundation, held at Systems Control, Inc., Palo Alto, Calif.

Combs, J. B., 1975, The geology and geophysics of geothermal energy: Technology Review, v. 46.

Cook, J. S., 1973, Communication by optical fiber: Scientific American, v. 229, Nov., p. 28-35.

Cording, E. J., et al., 1975, Methods for geotechnical observations and instrumentation in tunneling: Department of Civil Engineering, University of Illinois, Urbana, NSF Grant GI-33644X, UILU-ENG 75-2022, 2v.

Corrosion Control Handbook, 1970, Corrosion control methods: in Corrosion Control Handbook, Petroleum Engineer Publishing Co., p. 146-151.

Covington, L. C., 1978, Personal communication: Timet Division, Titanium Metals Corp. of America, Henderson, Nevada.

Covington, L. C., 1977, Titanium solves corrosion problems in petroleum processing: Metal Progress, February, 1977, p. 38-45.

Cromling, J., 1973, Geothermal drilling in California: Journal of Petroleum Technology, AIME, September, 1973.

deLoos, J. M., 1973, In situ compaction measurements in Gronigen observation wells--the analysis of surface subsidence resulting from gas production in the Gronigen area, the Netherlands: Verhandelingen van het Koninklijk Nederlands geologisch mijnbouwkundig Genootschap, Royal Dutch Society of Geologists and Mining Engineers, Transactions, the Netherlands, p. 79-104.

Dench, N. D., 1973, Well Measurements in Geothermal Energy: UNESCO, Earth Sciences 12, p. 85-96.

Denison, E. B., 1977, Shell's high-data-rate drilling telemetry system passes first test: The Oil and Gas Journal, June 13, p. 63-66.

Dodd, F. J., Johnson, A. E., and Ham, W. C., 1975, Material and corrosion testing at the Geysers geothermal power plant: 2nd UN Symposium on the Development and Use of Geothermal Resources, San Francisco, v. 3, p. 1959-1963.

Donham, J. G., 1976, Chemical control of drillpipe corrosion: Materials Performance, v. 15, no. 10, p. 34-38.

Dunnicliff, C. J., 1971, Equipment for field deformation measurements: 4th Pan American Conference on Soil Mech. and Foundation Engineering, Proceedings, San Juan, v. 2, p. 319-332.

Dunnicliff, C. J., 1970, Lecture notes, equipment and methods for measurement of displacements and settlements: Field Observations in Foundation Design and Construction, Seminar, Met. Section ASCE, Foundation and Soil Mechanics Groups, 31 p.

Echlin Mfg. Co., 1978, Brochures: Branford, CT, 06405.

Edwards, J.M., and Stroud, S.G., 1964, Field Results of the Electromagnetic Casing Inspection Log: Journal of Petroleum Technology, April, pp. 377-382.

Electron Energy Corp., 1978, Brochures and Personnel Communication: Landisville, PA., July.

Ellis, A. J., 1975, Geothermal systems and power development, American Scientist, v. 63, no. 5, p. 509-521.

Engineering, 1975, Thermal insulation: Engineering, v. 215, n. 1, p. I-VIII.

Evans, V., 1966, Plastics as corrosion-resistant materials: Pergamon Press, New York, 223 p.

Everard, N. J., and Tanner, J. L., 1966, Reinforced concrete design, Schaum's outline series: McGraw-Hill Book Co., New York, 325 p.

F-R Electronics Ltd., 1973, F-R Reed Switch Catalog, Wimborne, Dorset, U.K.

Fair, G. M., Geyer, J. C., and Okun, D. A., 1968, Water and Wastewater Engineering: John Wiley & Sons, New York, vol. 2, p. 37:12-13.

Finnemore, E. J., and Gillam, M. L., 1976, Compaction processes and mathematical models of land subsidence in geothermal areas: Proceedings, Second International Symposium on Land Subsidence, December 13-17, 1976, Anaheim, California, in press.

Fisher, E. N., 1978, Personal communication: E.N. Fisher & Associtates, Belle Center, Ohio.

Fulcher, M. K., 1977, personal communication: U.S. Department of the Interior, Bureau of Reclamation, Boulder City, Nevada, Nov. 22, 1977.

Geonor AS, 1968, Brochures: Oslo 7, Norway.

Geospace, 1977, Brochures: Houston, TX 77036.

Giles, A.F., 1966, Electronic Sensing Devices: G. Newnes Ltd., London, U.K., 158 p.

Gilette, L. O., 1975, Measurement of static strain at 2000°F: Experimental Mechanics, v. 15, no. 8, p. 316-322.

Glasstone, S., 1950, Sourcebook on Atomic Energy: D. Van Nostrand Co., Inc., New York, p. 136-142.

Glotzl, F., 1978, Brochures: Karlsruhe, W. Germany.

Goldsmith, P. R., and Hughes, J. M. O., 1977, A borehole displacement gauge: Geotechnique, v. 27, no. 2, p. 245-252.

Gould, J. P., and Dunnicliff, C. J., 1971, Accuracy of field deformation measurements: 4th Pan American Conference on Soil Mech. and Foundation Engineering, San Juan, v. 1, p. 313-366.

Griffith, J. M., 1978, Mechanical seals in severe service face stiff requirements: Oil and Gas Journal, v. 76, n. 4, p. 43-48.

Grindley, G. W., 1970, Subsurface structures and relation to steam production in the Broadlands geothermal field, New Zealand: Geothermics Special Issue 2, v. 2, no. 1.

Grindley, G. W., 1964, Geology of New Zealand geothermal steam fields, in Proceedings of the United Nations Conference on New Sources of Energy, v. 2, no. 2, p. 237-245.

Gupta, R. C., Marshall, R. G., and Badke, D., 1973, Instrumentation for dykes on permafrost, Kettle generating station: Canadian Geotechnical Journal, v. 10, p. 410-427.

Hanck, J. A., and Nekoksa, G., 1975, Corrosion rate monitoring at the Geysers geothermal power plant: Second UN Symposium on the Development and Use of Geothermal Resources, Proceedings, San Francisco, p. 1979-1984.

Harrison, M. R., and Pelanne, C. M., 1977, Cost-effective thermal insulation: Chemical Engineering, December 19, p. 62-76.

Harting, D. R., 1976, Evaluation of a capacitive strain measuring system for use to 1500oF: ISA Transactions, v. 15, no. 1, p. 8-16.

Hartley, R. A., 1972, Coatings and corrosion: Journal of Materials, v. 7, no. 3, p. 361-379.

Hatley, H. M., 1971, Pipeline corrosion -- the legal aspects: Anti-Corrosion, November, p. 6-7.

Heikes, R. R., and Ure, R. W. Jr., 1961, Thermoelectricity - Science and Engineering: Interscience Publishers, New York, 576 p.

Hermannsson, S., 1970, Corrosion of metals and the forming of a protective coating on the inside of pipes carrying thermal waters used by the Reykjavik Municipal District Heating Service: UN Symposium on the Development and Utilization of Geothermal Resources, Proceedings, Pisa, in Geothermics Special Issue 2, v. 2, pt. 2, p. 1602-1612.

Hewlett-Packard (HP), 1964, Time Domain Reflectometry: Hewlett-Packard Co., Application Note 62, Palo Alto, CA.

Hewlett-Packard Co. (HP), 1965, Cable testing with time domain reflectometry: Hewlett-Packard Co. Application Note 67, Colorado Springs, CO, 18 p.

Hirasuna, A.R., Bilyeu, G.D., Davis, D.L., Stephens, C.A., and Veal, G.R., 1977, Geothermal Elastometric Materials: Twelve-Months Progress Report submitted by L'Garde, Inc., Newport Beach, CA, to DGE-ERDA, 84 pp.

Hirono, T., 1969, Niigata ground subsidence and ground water change in Land Subsidence: Proceedings of the Tokyo Symposium, IAHS/AIHS/UNESCO, v. 1, P. 144-161.

Hoffman, M. R., 1975, Brine chemistry -- scaling and corrosion: Environmental Quality Laboratory, California Institute of Technology, Pasadena, California, EQL Memorandum No. 14, 48 p.

House, P. A., Johnson, P. M., and Jowse, D. F., 1975, Potential power generation and gas production from Gulf Coast geopressure reservoirs: California University, Lawrence Livermore Laboratory, Report 51813, 40 p.

Howell, R. C., Wright, F. D., and Dearinger, J. A., 1976, Ground movement and pressure changes associated with shortwall mining: Site Characterization, 17th U.S. Symposium on Rock Mechanics, Proceedings, 6 p.

Hunt, T. M., 1970, Net mass loss from the Wairakei geothermal field, New Zealand: UN Symposium on the Development and Utilization of Geothermal Resources, Proceedings, Pisa, in Geothermics Special Issue 2, v. 2, pt. 1, p. 487-491.

INCO, 1949, Iron nickel and related alloys of the invar and elinvar types - data sheet A: The International Nickel Co. Inc., New York, 20 p.

INCO, 1963, Mechanical and physical properties of the austenitic chronium-nickel stainless steels at elevated temperatures: The International Nickel Co. Inc., New York, 17 p.

INCO, 1968, Properties of some metals and alloys: The International Nickel Co. Inc., New York, 63 p.

Joffe, A. F., 1958, The revival of thermoelectricity: Scientific American, v. 199, n. 5, p. 31-37.

John Chatillon & Sons, 1978, Brochures - Isoelastic spring alloy: John Chatillon & Sons, Kew Gardens, New York.

Johnson, C. S. 1976a, Telemetry data systems-- Part 1--Frequency Division Multiplexing: Instrumentation Technology, v. 23, no. 8, p. 39-43.

Johnson, C. S., 1976b, Telemetry data systems--Part II--Time Division Multiplexing: Instrumentation Technology, v. 23, no. 10, p. 47-53.

Johnston Division, 1972, Ground water and wells: Johnston Division, Universal Oil Products, St. Paul, Minn., 440 p.

Kallstenius, T., and Bergau, W., 1961, In situ determination of horizontal ground movements: 5th International Conference on Soil Mech. and Foundation Engineering, v. 1, p. 481-485.

Kirklen, C. A., 1974, Effectiveness of well casing cathodic protection -- an analysis: Journal of Petroleum Technology, July, p. 724-730.

Koenig, J. B., 1969, The Geysers geothermal field: California Division of Mines and Geology Mineral Information Service, v. 22, no. 3, p.-123-128.

Kokesh, F. P., 1951, Gamma-Ray Logging: Oil and Gas Journal, Vol. 50, No. 12, July 26, p. 284-300.

Kolker, M., Greene, A.H., Kasevich, R.S., Robertson, J.C., and Grossi, M.D., 1978, Raytheon Downhole Information System-Electromagnetic Borehole Measurements while Drilling System: Final Report, Prepared for D.O.E. Department of Geothermal Energy by Raytheon Company, Advanced Development Laboratory, Wayland, MA, 140 pp.

Komaki, S. 1969, On the variation of artesian head and land-surface subsidence due to groundwater withdrawl, in Land Subsidence: Proceedings of the Tokyo Symposium, IAHS/AIHS/UNESCO, v. 1, p. 256-271.

Kovach, R. L., 1974, Source mechanisms for Wilmington oil field, California subsidence earthquakes: Seismological Society of America bulletin, v. 64, no. 3, p. 699-711.

Kryukov, P. A., and Larionov, E. G., 1970, Physico-chemical sampling of high temperature wells in connection with their encrustation by calcium carbonate: UN Symposium on the Development and Utilization of Geothermal Resources, Proceedings, Pisa, in Geothermics, Special Issue 2, v. 2, pt 2, p. 1624-1628.

Lambe, T. W., and Whitman, R. V., 1969, Soil mechanics: John Wiley & Sons, Inc., New York, 553 p.

LaMori, P. N., 1975, Hydrothermal geothermal resources and growth in utilization: Electric Power Research Institute, Palo Alto, California, in preparation.

Lee, K. L., and Shen, C. K., 1969, Horizontal movements related to subsidence: Journal of the Soil Mechanics and Foundation Division, ASCE, v. 95, no. SM1, p. 139-166.

Lofgren, B. E., 1961, Measurement of compaction of aquifer systems in areas of land subsidence: USGS Professional Paper 424-B, p. B49-B52.

Lofgren, B. E., 1968, Analysis of stresses causing land subsidence: U.S. Geological Survey Professional Paper 600-B, p. B219-B225.

Lofgren, B. E., 1969, Field measurement of aquifer-system compaction, San Joaquin Valley, California, USA, in Land Subsidence: Proceedings, IAHS/AIHS/UNESCO, Tokyo, p. 272-284.

Lofgren, B. E., 1973, Monitoring ground movement in geothermal areas: Hydraulic Engineering and the Environment, Proceedings, Hydraulics Division, ASCE, p. 437-447.

Lofgren, B. E., 1974, Measuring ground movement in geothermal areas of Imperial Valley, California: Conference on Research for the Development of Geothermal Energy Resources, Jet Propulsion Laboratories, Pasadena, Calif., p. 128-138.

Lofgren, B.E., 1978, Personal Communication: Woodward-Clyde Consultants, San Francisco, CA.

Lula, R. A., 1976, Ferritic stainless steels -- corrosion resistance and economy: Metal Progress, July, p. 24-29.

Lynes, Inc., 1979, 1978-1979 Catalog: Houston, TX 77017.

McCormick, J.B., ed., 1978, High-Temperature Electronics Workshop: Geothermal Energy Magazine, Vol. 6, No. 9, Sept., pp. 11-14.

McDonald, W. J., 1978a, MWD looks best for direcional work and drilling efficiency: MWD-State of the Art-1, The Oil and Gas Journal, Mar. 27, p. 141-147.

McDonald, W. J., 1978b, Four different systems used for MWD: MWD-State of the Art-2, The Oil and Gas Journal, April 3, p. 115-124.

McDonald, W. J., and Ward, C. E., 1975, Borehole telemetry is key to continuous downhole drilling measurements: The Oil and Gas Journal, Sept. 15, p. 111-147.

McLellan, H. J., 1965, Elements of physical oceanography: Pergamon Press, New York, p. 117-124.

McQueen, D. A., 1974, Junk car anodes may cut cathodic protection costs: World Oil, v. 178, no. 4, p. 71.

Maihak, H., 1977, Brochures: Hamburg, 60, W. Germany.

Malloy, J. F., 1969, Thermal insulation: Van Nostrand Reinhold Co., New York, 546 p.

Marsland, A., and Quarterman, R., 1974, Further development of multipoint magnetic extensometers for use in highly compressible ground: Geotechnique, v. 24, no. 3, p. 429-433.

Martin, C. A., and Rust, D. H., 1976, Hostile environment logging: The Log Analyst, v. 17, n. 2, p. 3-10.

Martin, R. E., 1975, Guide to better insulation: Chemical Engineering, May 12, p. 98-100.

Matsuo, K., 1973, Drilling for geothermal steam and hot water in Geothermal Energy: Unesco, Earth Sciences 12, p. 73-83.

Maurer, J. R., 1975, New austentitic and ferretic stainless steels for geothermal applications: 2nd workshop on materials problems associated with the development of Geothermal Energy, Proceedings, BuMines OFR 128-76, p. 105-119.

Mayuga, M. N., 1970, Geology and development of California's giant-Wilmington oil field, in Geology of Giant Petroleum Fields: American Association of Petrology and Geology, Memoir 14, p. 158-184.

Mayuga, M. N., and Allen, D. R., 1969, Subsidence in the Wilmington oil field, Long Beach, California, U.S.A., in Land Subsidence: Proceedings, IAHS/AIHS/UNESCO, Tokyo, p. 66-79.

Meidav, H. T., and Sanyal, S., 1976, A comparison of hydrothermal reservoirs of the western United States: Electric Power Research Institute, Palo Alto, California, EPRI ER-364 Topical Report 3, 170 p.

Melcor, 1978, Brochures and personal communication: Materials Electronic Products Corporation, Trenton, N.J.

Metal Progress, 1975, Superalloys for superservice: Metal Progress, August, p. 37-46.

Mitre Corporation, 1978, Prospects for Improvement in Geothermal Well Technology and Their Expected Benefits: prepared for Division of Geothermal Energy-D.O.E., No. HCP/T4014-04, 128 pp.

Moffitt, F. H., and Bouchard H., 1973, Surveying: Intext Educational Publishers, New York, 879 p.

Moffitt, L. R., 1972, Time-domain reflectometry-theory and applications: Hewlett-Packard Application Note 75, Colorado Springs, CO, 14 p.

Morris, W. S., 1970, Fighting scale in salt water lines, in Corrosion Control Handbook: Petroleum Engineer Publishing Co., p. 50-52.

Mueller, W.A., Kalfayan, S.H., Reilly, W.W. and Ingham, J.D., 1978, Development and Evaluation of Elastometric Materials for Geothermal Applications: Annual Report October 1976-October 1977, Prepared for Department of Energy, Division of Geothermal Energy by Jet Propulsion Laboratory, California Institute of Technology, Pasadena, CA 54 pp.

Nair, V. V., 1977, Variable oscillator reacts to magnetic flux changes: Electronics, November 24, p. 130, Reprinted from Electronics, November 24, 1977; Copyright © McGraw-Hill, Inc., 1977 all rights reserved.

Neale, L., 1974, Potentiometers: Engineering materials and design, v. 18, no. 10, p. 32-34.

Needham, P. B., Jr., and staff, 1975, Materials research and development program for geothermal environments: 2nd workshop on materials problems associated with the development of Geothermal Energy, Proceedings, BuMines OFR 128-78, p. 45-62.

Nicholson, R. W., 1974, Charts find acceptable dog-leg severity limits: Oil and Gas Journal, April 15, 1974, p. 72-82.

Noltingk, B. E., 1974, Measuring static strains at high temperature: Experimental Mechanics, v. 14, no. 10, p. 420-423.

Oil and Gas Journal, 1971, Directional survey instrument gets field tests: The Oil and Gas Journal, April 5, 1971, p. 66-67.

O'Rourke, J.E., 1977, U.S. Patent No. 4003263: Moraga, California, January, 18.

Ostroff, A. G., 1970a, Understanding and controlling oilfield corrosion, in Corrosion Control Handbook: Petroleum Engineer Publishing Co., p. 2-14.

Ostroff, A. G., 1970b, Understanding and controlling oilfield corrosion, in Corrosion Control Handbook: Petroleum Engineer Publishing Co., p. 15-20.

Ozawa, T. and Fujii, Y., 1970, A phenomenon of scaling in production wells and the geothermal power plant in the Matsukawa area: UN Symposium on the Development and Utilization of Geothermal Resources, Pisa, in Geothermics Special Issue 2, v. 2, pt. 2, p. 1613-1618.

Pahler, R.H., Jr., and Roberts, A.S., Jr., 1977, Design of a Fiber Optic Pressure Transducer: Trans. ASME, Feb. 1977, pp. 274-280.

Palmer, D. W., 1977, Hybrid microcircuitry for 300oC operation: IEEE Transactions non Parts, Hybrids and Packaging, v. PHP-13, no. 3, p. 252-257.

Palmer, D.W., 1978, Hybrid Microcircuitry for 300°C Operation: Geothermal Energy Magazine, Vol. 6., No. 9, Sept., pp. 24-29.

Palmer, D. W., Draper, B. L., McBrayer, J. D., and White, K. R., 1978, Achve devices for high temperature microcircuitry: Sandia Laboratories SAND77-1145, 120 p.

Palmer, D.W. and Gayard, F.P., 1978, Aluminum Wire to Thick-Film Connections for High-Temperature Operation: IEEE Transactions on Components, Hybrids, and Manufacturing Technology, Vol. CHMT-1, No. 3, Sept., pp. 219-222.

Palmer, D.W. and Heckman, R.C., 1978, Extreme Temperature Range Microelectronics: IEEE Transactions on Components, Hybrids, and Manufacturing Technology, Vol. CHMT-1, No. 4. Dec., pp. 333-340.

Palmer, J. D., 1976, Specialists check on metal oddities: Canadian Chemical Processing, February, p. 30-34.

Palmer, T. D., 1975, Characteristics of geothermal wells located in the Salton Sea geothermal field, Imperial County, California: Lawrence Livermore Laboratory, Livermore, Calif., UCRL-51976, 54 p.

Papadopulos, S. S., Wallace, R. H., Jr., Wesselman, J. B., and Taylor, R. E., 1975, Assessment of onshore geopressured-geothermal resources in the northern Gulf of Mexico basin, in White, D. E., and Williams, D. L. (eds.), Assessment of geothermal resources of the United States--1975: U.S. Geological Survey, Circular 726, p. 125-146.

Peterson, F. L., and Davis, S. N., 1969, Short-term movement of the land surface near water wells: Land Subsidence, Proceedings, IAHS/AIHS/UNESCO, Tokyo, p. 360-367.

Phillips, J. N., and Sykes, C. R., 1970, Temperature, pressure--key hurdles ahead in ultradeep wells: Oil and Gas Journal, July 20, 1970, p. 65-70.

Poland, J. F., 1976, Land subsidence stopped by artesian-head recovery, Santa Clara Valley, California in Second International Symposium on Land Subsidence: Proceedings, Anaheim, California, p. 124-132.

Poland, J. F., 1978a, Personal Communication in Review of WCC Interim Report No. 1: Sacramento, CA., February

Poland, J.F., 1978b, Personal Communication: U.S.G.S.-W.R.D., Sacramento, CA, October.

Poland, J. F., and Davis, G. H., 1969, Land subsidence due to withdrawal of fluids: Reviews in Engineering Geology, Geological Society of America, v. 2, p. 187-270.

Poland, J. F., and Ireland, R. L., 1965, Shortening and protrusion of a well casing due to compaction of sediments in a subsiding area in California: U.S. Geological Survey Professional Paper 525-B, p. 180-183.

Portland Cement Association (PCA), 1968, Effect of Various Substance on Concrete and Protective Treatments, Where Required: Portland Cement Association, Skokie, Illinois, General Information Pamphlet No. 3, 11 p.

Potts, E. L., 1964, Current investigations in rock mechanics and strata control: 4th International Conference on Strata Control and Rock Mechanics, H. Krumb School of Mines, Columbia University, New York City, p. 29-45.

Powell, J.A., 1974, A Simple Two-Fiber Optical Displacement Sensor: Rev. Sci. Instrum., Vol. 45, No. 2, copyright 1974 by American Institute of Physics.

Ramey, H. J., Jr., 1968, A reservoir engineering study of the Geysers geothermal field: submitted as evidence, Reich and Reich, Petitions versus Commissioner of Internal Revenue, 1969 Tax Court of the United States, 52 T.C., no. 74, 76 p.

Rehm, W.A., 1979, Drilling and Producing Wet Steam Wells at Cerro Prieto, Mexico: Petroleum Engineer International, No. 5, Vol. 51, Apr., pp. 78-90.

Renner, J. L., White, D. E., and Williams, D. L., 1975, Hydrothermal convection systems, in White, D. E., and Williams, D. L. (eds.), Assessment of Geothermal Resources of the U.S.--1975: U.S. Geological Survey Circular 726, p. 5-57.

Rex, R. W., and Howell, D. J., 1973, Assessment of U.S. geothermal resources, in Kruger, P., and Otte, E. (eds.), Geothermal Energy, Resources Production, Stimulation: Stanford University Press, Stanford, Calif., p. 59-67.

Riley, F. S., 1969, Analysis of borehole extensometer data from central California: Land Subsidence Proceedings, IAHS/AIHS/UNESCO, Tokyo, p. 424-431.

Riley, F. S., 1978, Personal communication: U.S.G.S., Denver, Co.

Rosato, D. V., 1968, Other properties and characteristics: in Rosato, D. V., and Schwartz, R. T. (eds.), Environmental Effects on Polymeric Materials, Interscience Publishers, New York, p. 733-1102.

Runyan, E. E., 1965, An engineered approach to cement-lined tubing: Journal of Petroleum Technology, June, 1965, p. 626-632.

Sandia Laboratories, 1978a, GeoEnergy Technology: Sandia Laboratories, Albuquerque, N.M., June, 16 pp.

Sandia Laboratories, 1978b, Geothermal Logging Instrumentation Development Progress Report: Sandia Laboratories, Albuquerque, N.M., Dec., 29 pp.

Sandia Laboratories, 1979, Lab News: Albuquerque, N.M., Vol. 31, No. 7, Apr. 6.

Sano, S., 1969, Observation of compaction of formation in the land subsidence of Niigata City: Land Subsidence, Proceedings, IAHS/AIHS/UNESCO, Tokyo, p. 401-409.

Schrier, L. L., (ed), 1976, Corrosion: George Newnes, London, 2 vols.

Selig, E. T., and Grangaard, O. H., Jr., 1970, A new technique for soil strain measurement: Materials Research and Standards, v. 10, no. 10, p. 19-36.

Sellers, J. B., 1969, Rock mechanics instrumentation for salt mining: Third Symposium on Salt, N. Ohio Geological Society, v. 2, p. 236-248.

Shaevitz Engineering, 1972, Handbook of Measurement and Control: by E.E. Herceg, HB-72, Pennsauken, N.J.

Sharpe, W. N. Jr., 1975, Strain gages for long-term high-temperature strain measurement: Experimental Mechanics, v. 15, n. 12, p. 482-488.

Silberberg, J. H., 1976, Reservoir fluid sampling and analysis for a geopressured geothermal well: Second Geopressured Geothermal Energy Conference, Proceedings, v. 3, p. 57-82.

Slope Indicator Co. (SINCO), 1977, Brochures: Seattle, WA 98103.

Smith, P. D. K., and Burland, J. B., 1976, Performance of a high precision multi-point borehole extensometer in soft rock: Canadian Geotechnical Journal, v. 13, p. 172-176.

Snape, E., and Van Royden, D., 1969, Sweet-well corrosion of sucker-rod steels: The Oil and Gas Journal, June 30, 1969, p. 98-105.

Snyder, R.E., 1978, Geothermal Well Completions: An Overview of Existing Methods in Four Types of Developments: Prepared by Completion Technology Co., Houston, TX, SAND 78-7010, 128 pp.

Speller, F. N., 1951, Corrosion, causes and prevention: McGraw-Hill Book Co., Inc., New York, 686 p.

Spinnler, R. F., and Stone, F. A., 1978, MWD program nearing commerciality: MWD State of the Art-4, The Oil and Gas Journal, May 1, p. 59-66.

Standard Wire and Cable Co., 1977, Brochure: Standard Wire and Cable Co., El Segundo, California.

Starr, D., 1978, Personal communication: W.B. Driver Co., New Jersey.

Stengel, R. F., 1977, Pulse Generator produces rate-independent voltage: Design News, April 18, 2 p.

Stilwell, W. B., Hall, W. K., and Tawhai, J., 1975, Ground movement in New Zealand geothermal areas: 2nd U.N. Symposium on the Development and Use of Geothermal Resources, Proceedings, San Francisco, California.

Teledyne, 1971, Thermoelectrics in Teledyne Report - 1st Quarter 1971: Teledyne, Inc., Los Angeles, Ca., p. I-10.

Teledyne, 1978, Brochures -- telan-2: Teledyne Energy Systems, Timonium, Maryland.

Telemac International Inc., 1970, Brochures: Paris, France.

Terzaghi, K., and Peck, R. B., 1967, Soil mechanics in engineering practice: John Wiley & Sons, Inc., New York, 729 p.

Thomas, H. P. and Luscher, U., 1978, Improvement of Bearing Capacity of Pipe Piles by Corrugations: unpublished paper prepared for Joing US-USSR Seminar on Building Under Cold Climates and Permafrost, Leningrad, USSR, October, 8 p.

Thorhallson, S., Ragnars, K., Arnorsson, S., and Kristmanndottir, H., 1975, Rapid scaling of silica in two district heating systems: 2nd U.N. Symposium on the Development and Use of Geothermal Resources, Proceedings, San Francisco, p. 1445-1449.

Toliva, E., 1970, Corrosion measurements in a geothermal environment: U.N. Symposium on the Development and Utilization of Geothermal Resources, Pisa, in Geothermics Special Issue 2, v. 2, pt. 2, p. 1596-1601.

Tomlinson, M. J., 1969, Foundation design and construction: Pitman Publishing, London, 785 p.

Traynor, B. V., 1978, Electrodril demonstration program shows promise: MWD-State of the Art-3, The Oil and Gas Journal, April 17, p. 108-129.

Tskhvirashvilli, P., Vardigoreli, O., and Alcosin, P., 1972, On corrosion of metals in geothermal power plants: Geothermics, v. 1, no. 3, p. 113-118.

Turner, W. C., 1974, Criteria for installing insulation systems in petrochemical plants: Chemical Engineering Progress, v. 70, n. 8, p. 41-45.

Uhlig, H. H. (ed.), 1948, The corrosion handbook: John Wiley & Sons, New York, 1188 p.

U.S. Bureau of Reclamation (USBR), 1966, Concrete Manual: U.S. Government Printing Office, Washington, 7th ed., 642 p.

U.S. Department of Interior, 1976, Geothermal resources operational orders issued under the Geothermal Steam Act of 1970: U.S. Department of the Interior, Geological Survey, Conservation Division, Office of the Area Geothermal Supervisor, GRO Order Nos. 1-4.

Van der Knapp, and van der Vlis, A. C., 1967, On the cause of subsidence in oil producing areas: 7th World Petroleum Congress 3, Mexico City Proceedings, Elsevier Scientific Publishing Company, The Hague, p. 85-95.

Van Vlack, L. H., 1964, Elements of materials science: Addison-Wesley Publishing Co., Inc., Reading, Mass., 445 p.

Varnado, S.G. and Colp, J.L., 1978, Report of the Workshop on Magma/Hydrothermal Drilling and Instrumentation: Sandia Laboratories, Albuquerque, N.M., 68 pp.

Veneruso, A.F., Polito, J., and Heckman, R.C., 1978, Geothermal Logging Instrumentation Development Program Plan: Prepared by Sandia Laboratories, Albuquerque, N.M., for U.S.-E.R.D.A., SAND 78-0316, Aug., 72 pp.

Veneruso, A.F., 1979, Personal Communication: Sandia Laboratories, Albuquerque, Apr.

Veneruso, A.F., and Stoller, H.M., 1978, High Temperature Instrumentation for Geothermal Applications: Geothermal Resources Council, Transactions, Vol. 2, July, pp. 679-682.

Waddell, G. G., 1964, Application of instrumentation in determining rock behavior during stoping at the Star Mine, Burke, Iadho: Proceedings, Sixth Symposium on Rock Mechanics, University of Missouri, Rolla, p. 23-42.

Wahl, E., and Yen, I., 1975, Scale deposition and control research for geothermal utilization, in Second U.N. Symposium on the Development and Use of Geothermal Resources: Proceedings, San Francisco, v. 3, p. 1855-1864.

Wahl, E. F., 1976, Scale deposition in geothermal brines, in Second Workshop on Materials Problems Associated with the Development of Geothermal Energy Systems: El Centro, California, May 1975, U.S. Bureau of Mines Open File Report 128-76, p. 15-44.

Walker, G. M. 1977, Weigand Effect Getting Practical: Electronics, April 28, p. 85-86.

Weeter, R. F., and Chandler, R. J., 1974, Mutual interference between well casings with cathodic protection: Materials Performance, v. 13, no. 1, p. 26-30.

West, E. R., 1977, Snowbank drilling in the Delaware basin of west Texas: SPE-AIME Deep Drilling and Product. Symposium, Amarillo, Texas.

White, D. E., and Williams, D. L. (eds.), 1975, Assessment of geothermal resources of the United States--1975: U.S. Geological Survey, Circular 726, 155 p.

White, D. E., 1973, Characteristics of geothermal resources, in Geothermal Energy: Resources, Production, Stimulation, edited Paul Kruger and Carel Otte, with the permission of the publishers, Stanford University Press. © 1973 by the Board of Trustees of the Leland Stanford Junior University.

White, D. E., 1974, Diverse origins of hydrothermal ore fluids: Economic Geology, v. 69, p. 954-973.

Whiting, R. L., 1973, Possible effects of geothermal water and steam production on the subsurface environment: Proceedings, 74th National Meeting of AICHE, New Orleans, Paper No. 50B, p. 762-771.

Wilson, J. S., Shepherd, B. P., and Kaufman, S., 1974, An analysis of the potential use of geothermal energy for power generation along the Texas gulf coast: Dow Chemical U.S.A., Texas Division, 63 p.

Wilson, S. D., 1962, The use of slope measuring devices to determine movements in earth masses, in Field Testing of Soils: ASTM Special Technical Publication No. 322, p. 187-198.

Wolfe, R., 1964, Magnetothermoelectricity: Scientific American, June, p. 70-81.

Wonn, J.W., 1978, Acoustic Sensor Development for Geothermal Borehole Televiewer: Geothermal Resources Council, Transactions, Vol. 2, July, pp. 735-738.

Woodward-Clyde Consultants (WCC), 1977a, Available subsurface instrumentation for geothermal subsidence: Unpublished report submitted to Lawrence Berkeley Laboratory, Berkeley, by Woodward-Clyde Consultants, San Francisco, Interim Report No. 1, 40 p.

Woodward-Clyde Consultants, (WCC), 1977b, Subsidence monitoring systems for undermined areas: unpublished report submitted to the U.S. Bureau of Mines, Denver, by Woodward-Clyde Consultants, San Francisco, CA, 304 p.

Woodward-Clyde Consultants (WCC), 1978a, Methods for Improving Available Subsidence Instrumentation: Unpublished report submitted to Lawrence Berkeley Laboratory, Berkeley, by Woodward-Clyde Consultants, San Francisco, Interim Report No. 2, 40 p.

Woodward-Clyde Consultants (WCC), 1978b, Sensor and Signal Technology for Geothermal Subsidence Monitoring: Unpublished report submitted to Lawrence Berkeley Laboratory, Berkeley, by Woodward-Clyde Consultants, San Francisco, Interim Report No. 3, 34 pp.

Woodward-Clyde Consultants (WCC), 1978c, New Concepts in Subsidence Instrumentation: Unpublished report submitted to Lawrence Berkeley Laboratory, Berkeley, by Woodward-Clyde Consultants, San Francisco, Interim Report No. 4, 15 pp.

Yanagase, T., Suginohara, Y., and Yanagase, K., 1970, The properties of scales and methods to prevent them: UN Sumposium on the Development and Utilization of Geothermal Resources, Proceedings, Pisa, in Geothermics Special Issue 2, v. 2, pt. 2, p. 1619-1623.

Yeakley, L. M., and Lindholm, U.S., 1974, Development of capacitance strain transducers for high-temperature and biaxial applications: Experimental Mechanics, v. 14, no. 8, p. 331-336.

Yerkes, R. F., and Castle, R. O., 1969, Surface information associated with oil and gas field operations in the United States, in Land Subsidence: Proceedings of the Tokyo Symposium, IASH/AISH/UNESCO, v. 1, p. 55-56.

Zapffe, C. A., 1949, The corrosion resistance of the stainless steels, Stainless Steels, American Soceity for Metals, p. 60.

APPENDIX A

REPORT UPDATE IN RESPONSE TO GEOTHERMAL SUBSIDENCE WORKSHOP

TABLE OF CONTENTS

		Page
	LIST OF TABLES AND FIGURES	ii
1.0	INTRODUCTION	1
2.0	MONITORING SYSTEM COMPONENTS	1
	2.1 Component Description	1
	2.2 Influence of System Components on System Performance	2
3.0	MEASUREMENT REQUIREMENTS	2
	3.1 Probable Users/Uses of Data	3
	3.2 Specifications	3
4.0	RE-EVALUATION OF SLIP COUPLINGS	4
	4.1 Past Use of Slip Couplings for Subsidence Monitoring	4
	4.2 Compatibility of Slip Couplings with the Geothermal Environment	6
	4.3 Compatibility of Slip Couplings with Existing Well Completion Techniques	6
	4.4 Conclusion	9
5.0	DEPTH PROBLEMS	10
	5.1 Probes with Three or More Sensors	10
	5.2 Strain-Free Inserts	10
6.0	MATERIAL PROBLEMS	14
	6.1 Super-Invar	14
	6.2 High Temperature Electronics and Logging Tools	14
7.0	REFERENCES	19

LIST OF TABLES AND FIGURES

		Page
TABLE	6.1 - SUPER-INVAR DATA SHEET	15
TABLE	6.2 - GEOTHERMAL LOGGING TOOLS UNDER DEVELOPMENT	18
TABLE	6.3 - HIGH TEMPERATURE ELASTOMER AND SEALS	20
Figure	4.1 - COMPARISON OF RIGID AND SLIP COUPLINGS	5
Figure	4.2 - CASING ADJUSTER FOR WELLS IN SUBSIDING AREAS	7
Figure	5.1 - CORRECTION FOR PROBE ACCELERATION	11
Figure	5.2 - POSSIBLE APPLICATION OF STRAIN-FREE INSERT IN PRODUCTION WELL	13
Figure	6.1 - EXPANSION CURVES FOR LOW EXPANSION ALLOYS	16

APPENDIX A: REPORT UPDATE IN RESPONSE TO GEOTHERMAL SUBSIDENCE WORKSHOP

1.0 INTRODUCTION

In October 1978, a Geothermal Subsidence Workshop was held on the Geothermal Subsidence Research Program, sponsored by D.O.E. and managed by Lawrence Berkeley Laboratory. At that workshop, Woodward-Clyde presented the results of this study. LBL directed that the feedback from the workshop be incorporated into our report. This appendix contains our summaries of relevant opinions expressed at the workshop by industry representatives, government regulators, and reservoir engineers and modelers. It also contains the results of some additional research performed to answer some of the questions raised at the workshop. The workshop provided constructive criticisms and suggestions which we believe have contributed significantly to the value of this report.

This appendix details selected problems raised at the Workshop. In the following sections, we discuss:

- o monitoring system components
- o measurement requirements
- o re-evaluation of slip couplings
- o depth problems
- o other material and tool problems.

These discussions are included as an Appendix to allow the main text to remain a concise summary of our research. Pertinent points from this appendix are incorporated in the main text.

2.0 MONITORING SYSTEM COMPONENTS

Some participants at the Geothermal Subsidence Workshop were not familiar with the various components of a subsurface monitoring system to detect ground displacements. Since the performance of a monitoring system depends on the capabilities of each of its components, we briefly review here the elements which comprise inclinometer and extensometer systems.

2.1 Component Description

COMPONENT	DESCRIPTION
Borehole	In geothermal practice, a variety of hole completion techniques are used including unlined sections, slotted liners, and cemented, cased holes.
Markers	Markers are used to identify points in the formation to be studied. Two examples are grouted anchors and radioactive bullets shot into the formation. For inclinometer use, the markers may be simply marks on the logging cable indicating distance from the downhole instrument to the surface cable reel.

Sensing Device (with readout)	In an extensometer, the sensing device locates the markers and determines the relative vertical displacement between them. In an inclinometer, the sensing device measures the relative angular rotation at the points under study; these points are located by the length of cable played out.
Logging System	Most extensometer and inclinometer systems use sensing devices which must be lowered down a borehole to make readings. A logging system may include a winch, electrical cable, access gland and other equipment for handling the sensing device.
Orientation Device	Inclinometers only. An orientation device such as a gyroscope or grooves in a casing is needed to indicate the compass bearing of the measured angular movement.

2.2 Influence of System Components on System Performance

While every engineer can identify some aspect of an instrumentation system which he feels is most critical, it is important to recognize that each component of an instrumentation system will influence its performance. In particular, the quality of the markers and sensing device should be comparable. An example from surveying may clarify this point. Good practice prohibits the use of low accuracy wooden rods or wooden stakes with a high accuracy first order level. Rather, an invar rod and carefully constructed benchmarks are used. Similarly then for subsurface monitoring, markers which provide a fuzzy signal are not compatible with precision sensing devices. Conversely, if the economics of geothermal well completion prohibits installation of precision markers in the well, then it may be sensible to develop a subsurface subsidence monitoring tool that provides only approximate measurement of downhole compaction.

In the main text of the report, we discuss ways in which each of the components of a compaction monitoring system can be improved to provide better performance. However, we recognize that, in the final analysis, the components for a compaction monitoring system for geothermal use will be selected based not only on the desired performance level but also on economic constraints.

3.0 MEASUREMENT REQUIREMENTS

In Interim Report 1 (Appendix B) and in Section 2.1.1 of this report, we briefly examined what accuracies and other monitoring characteristics might be useful to people studying subsidence phenomena. However, a detailed study and interviews with potential data users was beyond the scope of this study. The workshop provided valuable insight into (1) who might use the data and why compaction data may be collected, and (2) what specifications might be desirable for instrument development. The discussion below summarizes some issues and opinions expressed at the workshop.

3.1 Probable Users/Uses of Data

Two motivating factors will probably be responsible for subsurface compaction instrument development and use: (1) expectation of future federal regulation, and (2) data requirements for reservoir engineering. It was felt that specific federal requirements for subsurface subsidence monitoring were not expected, and subsurface monitoring would only be used if specifically required. Industry representatives appeared hesistant to endorse development of a compaction monitoring tool because they feared it might encourage federal regulation along those lines. With respect to (2), the modelers and reservoir engineers felt that in-situ compaction measurements were valuable because they (a) would permit a direct comparison of laboratory and field measurements of rock response, (b) they would help refine reservoir models, and (c) they would be useful to help minimize reservoir damage. However, one attendee commented that, at Wilmington, subsurface compaction data from the field measurements were not used to any extent by reservoir engineers. Many of the workshop attendees envisaged compaction monitoring as a long-range scientific tool, not necessarily required by the DOE "on-line" date of 1985.

3.2 Specifications

3.2.1 Magnitude of Movement and Associated Accuracy - Because of brine disposal problems, injection will almost certainly be practiced. In most geothermal areas, brine will be returned to the producing reservoir. As a result of injection, the magnitude of subsidence movements is likely to be small, although it may vary from the injection area to the withdrawal area. Consequently, to observe compaction where reinjection is practiced, sensitive instruments will be required to detect and define the compacting zones. Thus, the specifications detailed in Table 2.8 (in main text) are reasonable and possibly even too lax.

In geopressured areas (Snyder, 1978), the situation may be somewhat different. Early laboratory data suggest that reinjection may substantially reduce the permeability in the fine sands of the geopressured zones (Snyder, 1978). Also very high injection pressures will be required to match downhole pressures, overcome flow loss of head, and ensure adequate fluid take. Consequently, waste brine may be reinjected into relatively shallow non-producing zones (Snyder, 1978). Without this source of recharge to the producing reservoir, the large movements (5-7 m total compaction) listed in Table 2.8 are more likely to develop. Thus, geopressured wells may be monitored satisfactorily with coarser instrumentation than is needed for other geothermal areas.

3.2.2 Areal Extent of Monitoring

At the Geothermal Subsidence Workshop, the question of the areal extent of monitoring was raised. A study of the number of installations in a given field and the locations of those installations was beyond the scope of this project. However, this point merits further study, since the number of required installations will affect the relative costs and benefits of each of the candidate instrument systems.

4.0 RE-EVALUATION OF SLIP COUPLINGS

At the Geothermal Subsidence Workshop, industry representatives were resistant to concepts that required modification of the well to improve instrument system accuracy (such as the use of slip couplings). Their hesistancy is understandable since increased installation costs and more complicated technical problems would result from such modifications.

In our first Draft Final Report (October, 1978) we discussed several techniques for improving the accuracy of measurements, including the use of markers shot into the formation and the use of slip couplings. These modifications were proposed (1) to minimize the influence of the steel and cement in the borehole on the measured subsidence, and (2) to provide markers that accurately track formation movements. A convenient way to monitor ground movements is to monitor casing deformation and assume it corresponds to formation compaction. We were concerned that with this technique, rigid couplings might hinder accurate definition of the zone of compaction, as shown in Figure 4.1. The use of slip couplings can improve the sensitivity of techniques which monitor casing deformation as an indicator of formation compaction. Consequently, all four of the recommended instrument systems in the Draft Final Report incorporated slip couplings. In view of the comments at the workshop, we briefy re-examined some questions associated with the use of slip couplings, including:

- past use for subsidence monitoring
- compatibility with the geothermal environment
- compatibility with existing geothermal well completion techniques.

4.1 Past Use of Slip Couplings For Subsidence Monitoring

In this section, the previous use of slip couplings in subsidence ares is reviewed.

Couplings which allow slip have been used to prevent subsidence damage in oil and groundwater subsidence areas. Mayuga and Allen (1969) note that the use of a well completion technique that combined a compression joint and a bell hole packed with a viscous fluid was used to protect oil wells at Wilmington, California, against subsidence damage. Poland (1978b) notes that the Geological Survey installed slip joints in the San Joaquin and Santa Clara Valleys. In one well in western Fresno County, he observed, "We installed 8 slip joints in this well 2000 ft deep in 1958. As of now we have measured 12.3 feet of compaction at this well. It is still functioning as a compaction recorder. I am sure it would have failed many years ago without slip joints."

The USGS has generally designed and fabricated their own slip couplings (Poland, 1978b; Lofgren, 1978). As shown in Figure 2.8a of the main text, commercial casing expansion joints are available, although their design function is to absorb thermal length changes in production casing rather than subsidence-induced length changes. A commercial "Casing Adjuster" for subsidence damage control was available for a limited time from the Creighton Oil Tool Co. and was used at Wilmington and at Lake Maracaibo,

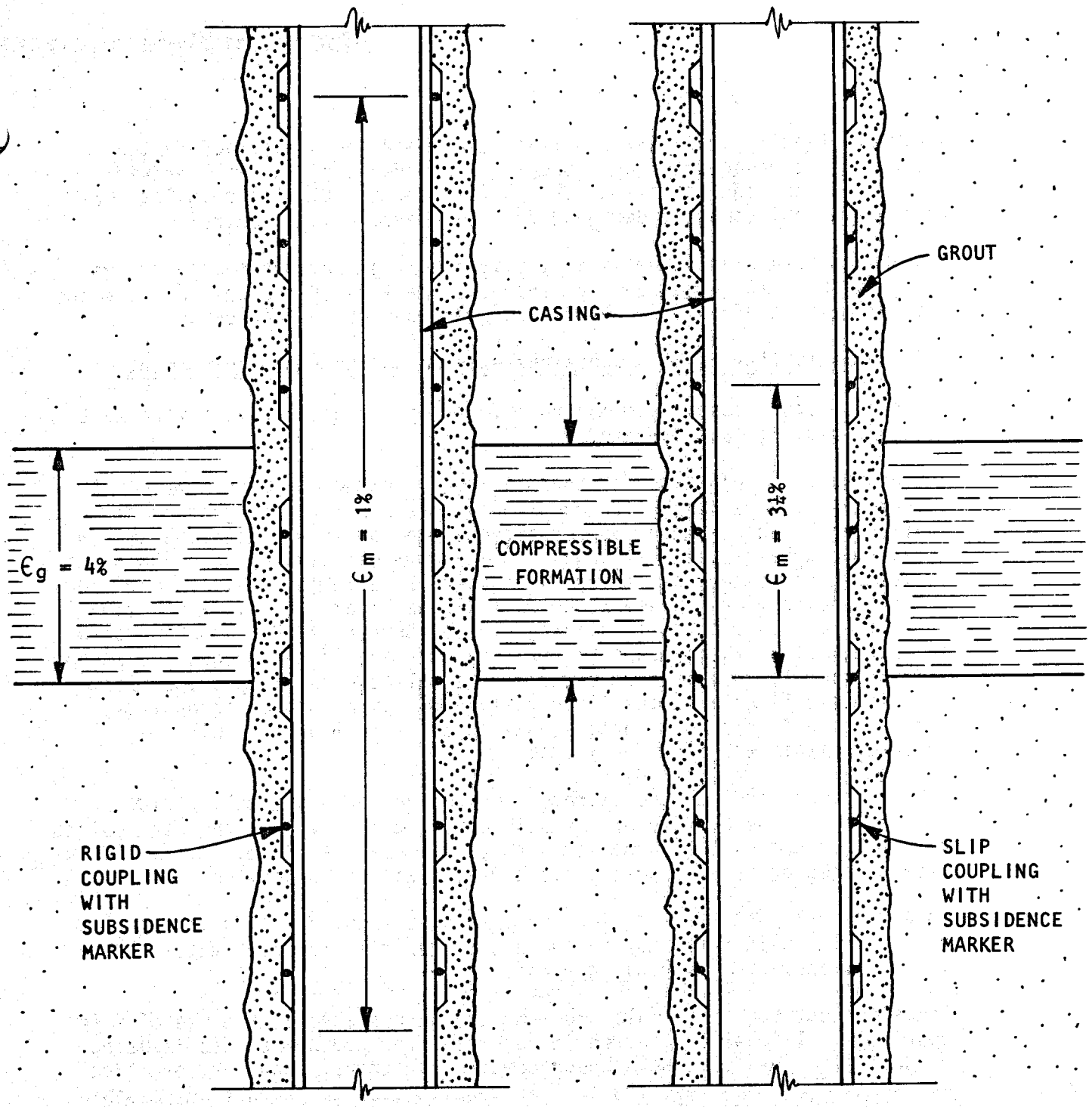

(a) WELL WITH RIGID COUPLINGS

(b) WELL WITH SLIP COUPLINGS

NOTES:

(1) ϵ_m = measured strain; ϵ_g = ground strain

(2) In well (a) with rigid couplings, some slip between the casing and the formation may occur making it difficult to define the zone undergoing compaction. In well (b), the zone of compaction is defined more precisely with slip couplings.

Figure 4.1 - COMPARISON OF RIGID AND SLIP COUPLINGS

Venezuela (see Figure 4.2). Currently, A and A Tools manufacture the Creighton casing adjuster and Bowen Tools of Houston, TX, will provide slip joints on request (Allen, 1979). of a commercial slip coupling currently available that is designed for subsidence damage control.

The above discussion suggests that slip couplings have been used successfully in subsiding areas and can increase the life of the well and improve the performance of instrumentation such as compaction recorders.

4.2 Compatibility of Slip Couplings with the Geothermal Environment

In this section, possible damaging effects of the geothermal environment on slip couplings are examined.

The problems of adjusters for thermal length change may be comparable to potential problems which slip couplings may encounter in a geothermal environment. In oil wells where string expansion is expected due to temperature changes after well completion, a downhole casing expansion joint is used in the innermost string (see Figure 2.8a in main text). For geothermal applications, however, no suitable seals are yet available to allow the use of a downhole sliding sleeve (Snyder, 1978). The approach in geothermal wells has been to fix the lower end of the production string and incorporate an expansion spool in the wellhead to accommodate thermally-induced length changes (Snyder, 1978). New elastomer technology, discussed in Section 6.0, offers hope that the seal problem will be resolved within the next few years.

Other problems include the extremely corrosive, abrasive well fluid. Unless the inside profile of the slip coupling is very smooth, high points will be abraded by the formation sand carried by the fluid. Also at diameter changes or in recesses, scale products will be deposited.

An additional potential problem for slip couplings, as shown in Figure 2.8b, of the main text, may be the use of several different materials, which may encourage galvanic corrosion.

It is evident that materials problems are an obstacle to the use of slip couplings. Intensive research in materials for geothermal use is being conducted now by DOE and its geothermal contractors. However, practical application of this research to slip coupling design may not be possible for two or three years.

4.3 Compatibility of Slip Couplings with Existing Well Completion Techniques

The instrument systems developed in this project utilize slip couplings because they provide an accurate way to track subsurface movements. In this section, we assess whether this dependence on slip couplings is appropriate. First of all, the well must be cased or lined to use slip couplings. Secondly, slip couplings are effective as markers for monitoring only if there is a certain minimum adhesion between the casing and the formation. In that case, the compression of the casing (concentrated at

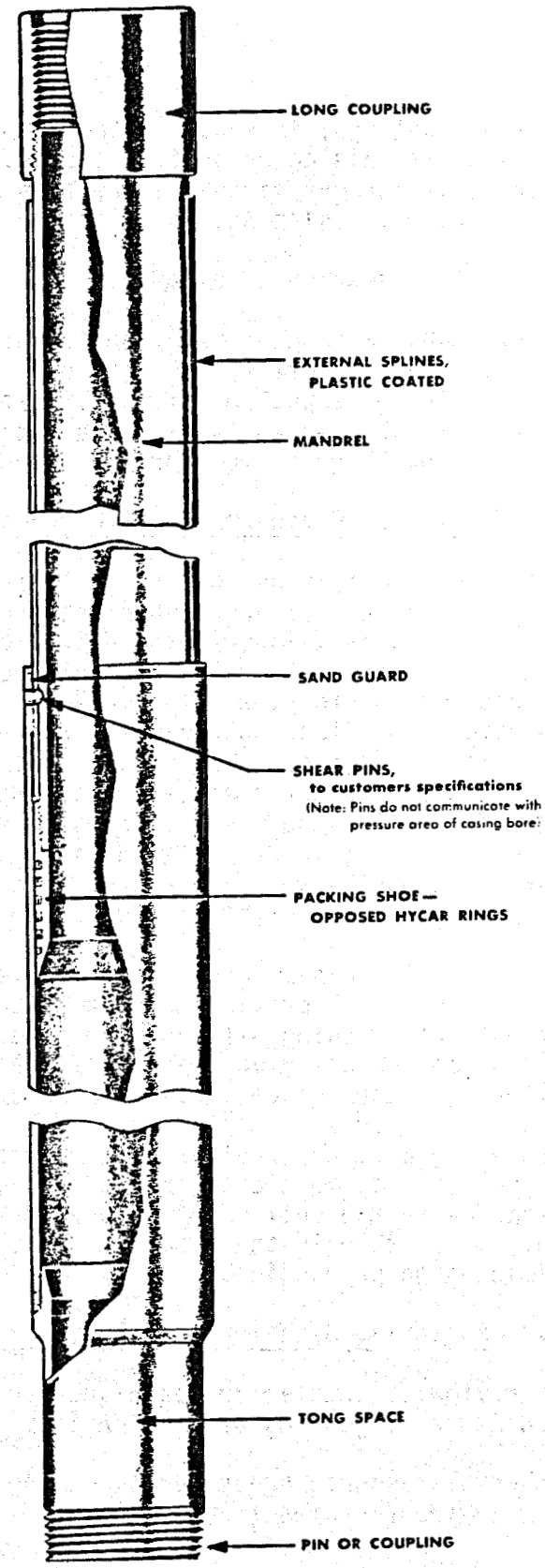

Figure 4.2 - CASING ADJUSTER FOR WELLS IN SUBSIDING AREA
(Creighton, 195

the slip couplings) is equal to the compression of the formation over that interval. If this adhesion is not present, the couplings may not be as effective as markers since all the slip may concentrate at the coupling with the lowest resistance to sliding.

Thus, in this section we examine:

(1) What are the completion techniques?
(2) When are wells cased/lined?
(3) Can we expect minimum casing/formation adhesion?
(4) To what extent will we have to use methods other than slip couplings to monitor formation movements around a well?

4.3.1 Review of Geothermal Well Completion Techniques

In all geothermal areas, casing is fully cemented above the producing formation. Practice differs within the production zone. The casing program at the Geysers is unique in the U.S. because of the competent nature of the geologic formation. An open hole completion is used to provide minimum restrictions to flow. In the Imperial Valley, wells are lined in the production zone since downhole formations are not competent enough for open hole completions. Most often, uncemented slotted liners are used, although one operator does cement casing and perforate it. Significant skin effects and sand production may result with the use of slotted, uncemented liners. Snyder (1978) suggests that these problems will become apparent as more power plants are constructed, as more wells are drilled, and as longer-term operating data become available for existing wells.

Sand production can be minimized by several techniques (Snyder, 1978). One approach is to provide support to the formation around the well so that natural bridging will prevent sand movement. This approach also ensures good coupling between the formation and the casing for accurate monitoring. One method, gravel packs around slotted liners, is expected to gain acceptance in the Imperial Valley (Snyder, 1978). Cementing and perforating a liner provides even more support. This technique may receive some use in the Imperial Valley, but will probably gain greater acceptance in the Gulf Coast geopressured areas. Sands there are considerably finer than in the Imperial Valley and will require more support to minimize sand production.

4.3.2 Potential Site for Slip Coupling Use

This review of completion techniques answers several of the questions posed at the beginning of Section 4.3.

Geothermal resource areas having casing or liners in which slip couplings could be incorporated include:

- all geothermal resource areas above the producng zone (especially if compaction due to other sources is occurring in these formations)

- o all geopressured areas
- o all liquid-dominated wells.

The minimum casing/ground adhesion needed to make slip couplings act as accurate formation markers will be present:

- o in cemented wells
- o in gravel packed, lined wells
- o in wells with slotted liners, provided the formation is soft enough to move in and grip the liner, and provided erosion around the liner is limited.

Alternate techniques for accurate tracking of formation movements must be considered for:

- o Vapor-dominated wells in the producing zone
- o Some liquid-dominated wells with slotted liners in the producing zone.

4.4 Conclusion

The approach in this research project has been to try to use producing wells for subsidence monitoring. As a result we concluded, as presented in earlier reports, that slip couplings would improve the quality of the data. This conclusion was based on subsidence phenomena and measurement experience in non-geothermal areas. The review in this secion has indicated that while the slip coupling technique is valid, its potential for use may not be as extensive as we had hoped. Our conclusions on slip couplings are presented in the following paragraphs.

Casing movement in a cemented well may not be representative of formation movement without the use of slip couplings. Slip couplings can prevent casing damage and improve instrumentation performance. These conclusions were reached in earlier reports.

The use of slip couplings offers the most potential for geopressured wells, where the combination of potentially large movements (Section 3.0) and the use of cemented casing favor slip coupling use. Also, a longer development time is available to allow materials problems in slip coupling design to be overcome. Slip couplings also appear to be suitable for producing zones with gravel-packed slotted liners and for some wells using only slotted liners.

Slip couplings are compatible with well completion techniques in all geothermal wells above the production zone. They will improve the sensitivity of the measurement.

In the producing zones of vapor and some liquid-dominated wells, it appears that alternate techniques for tracking formation displacements should be explored. Some techniques are discussed in the main text. They include:

- o use of markers (such as radioactive or magnetic bullets) shot into the formation around producing wells
- o use of auxiliary casing attached to production well casing
- o use of a separate installation for compaction monitoring -- fully cemented in the producing zone and incorporating slip couplings or bellows sections.

Of these, the use of markers shot into the formation will probably minimize the capital investment in permanent downhole subsidence monitoring equipment.

5.0 DEPTH PROBLEMS

One problem which is encountered by probe type monitoring devices is variable velocity of the probe caused by "tool bounce" and "cable stretch." This effect can be minimized by the use of three or more sensors per probe (Main Text --Section 2.2.5) or the use of strain-free sections in casing (Main Text -- Section 2.4.3). Some brief comments on these two techniques follow.

5.1 Probes with Three or More Sensors

Figure 2.4 in the main text shows how the distance between downhole markers can be calculated from the signals from a three sensor probe travelling at a constant velocity between the two markers. If the ratio of the distances L_{12} and L_{23} (Main Text -- Figure 2.4) as shown by the strip chart recorder is different from that on the probe, the velocity of the probe is probably not constant. If one makes the assumption that the acceleration of the probe is constant over the interval between the markers, then a slightly more accurate estimation of distance can be obtained, as shown on Figure 5.1 in this appendix. The error, if this correction is not made, is about eleven percent at a constant acceleration of 1 m/sec^2, reducing to one percent at 10^{-4} m/sec^2 acceleration. Typical logging rates and marker distances were used in the calculations.

5.2 Strain-Free Inserts

In Figures 2.13, 2.14, and 2.15 in the main text, we suggest the use of strain-free inserts for use in auxiliary casing. Strain-free inserts provide a known length downhole and were proposed to reduce the measurement problems caused by varying probe velocity as it traverses the borehole. At the Geothermal Workshop, D. Allen (City of Long Beach) suggested that this technique would also work in producing wells. A sketch of such a system is shown in Figure 5.2. Its advantage is that the cost of installation is less than for an auxiliary casing installation. Also, in common

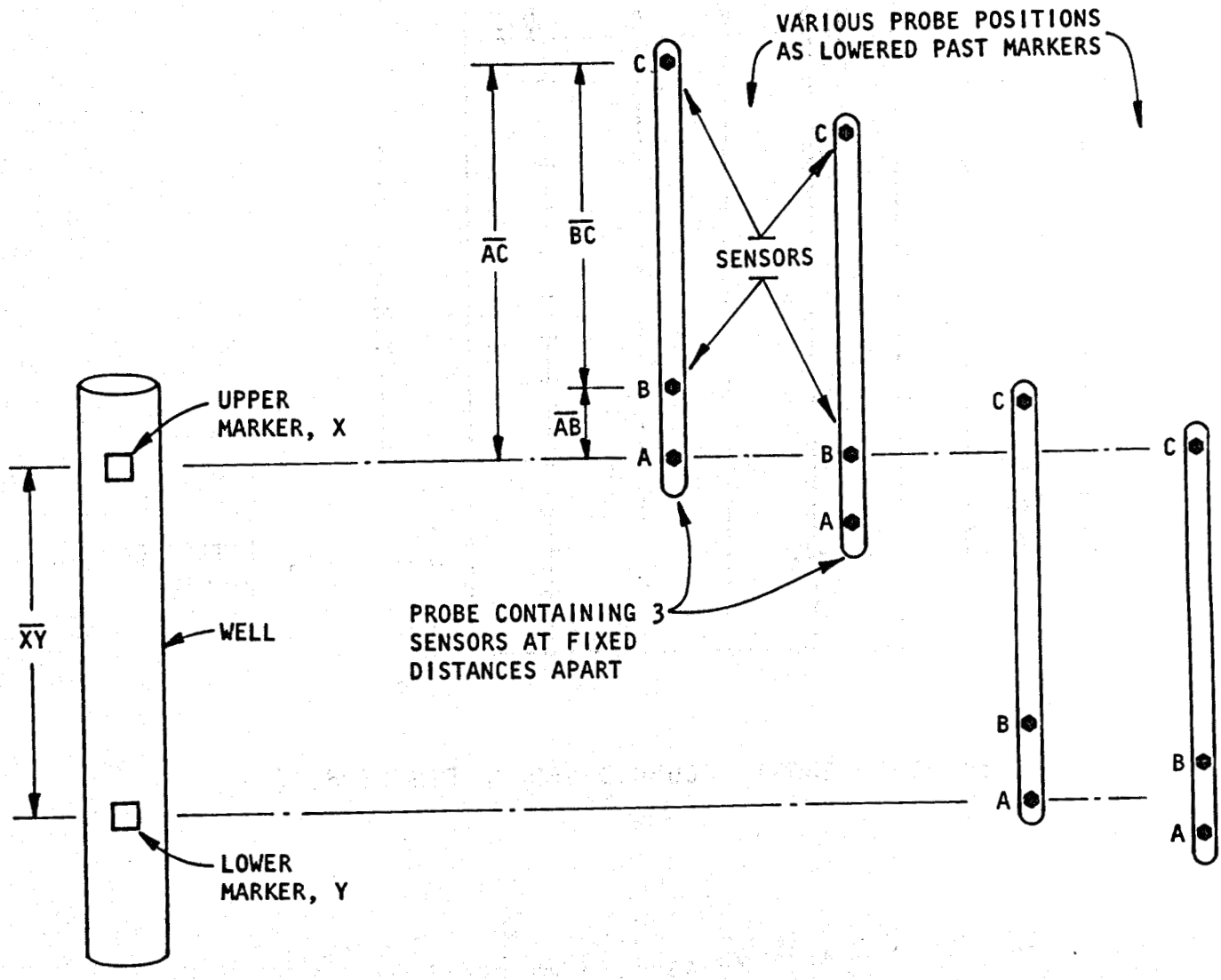

(a) POSITION OF PROBE AS EACH SENSOR RECORDS MARKER

Figure 5.1 - CORRECTION FOR PROBE ACCELERATION

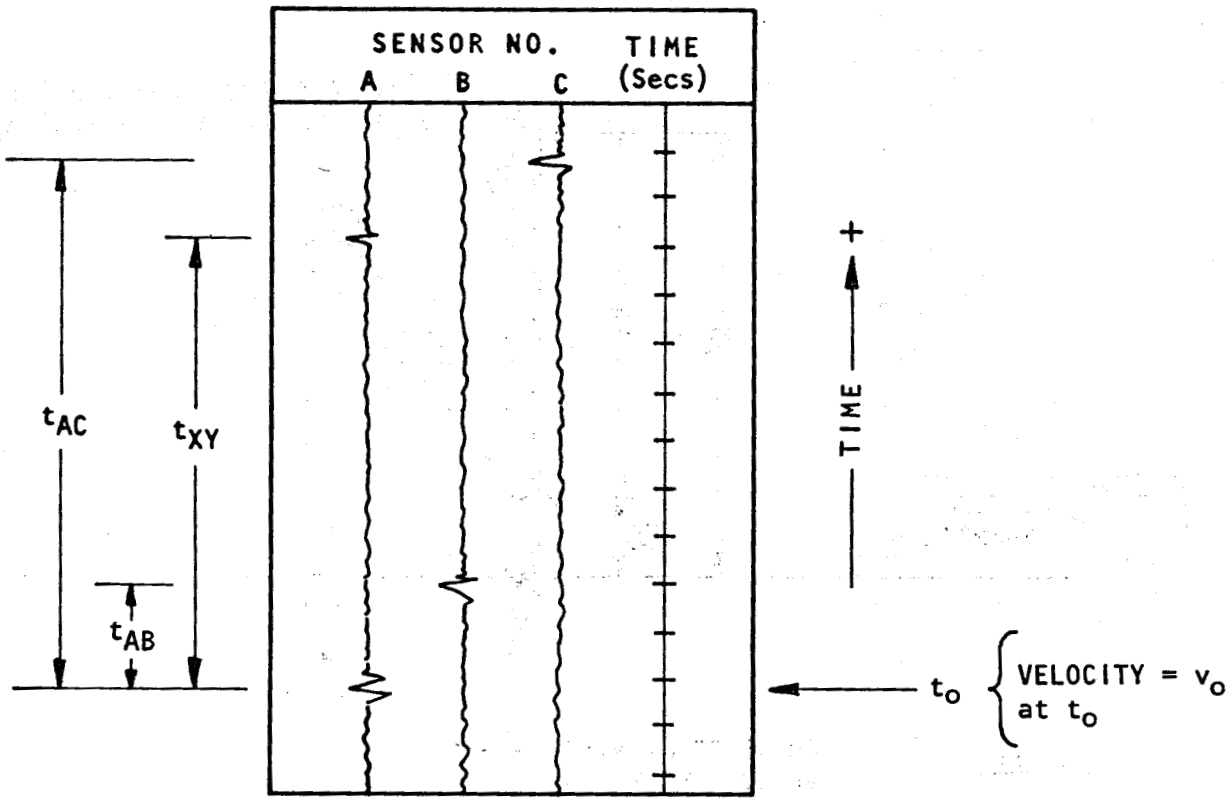

(b) STRIP CHART RECORD BASED ON FIGURE 5.1(a)

$$\left.\begin{aligned} \overline{AB} &= v_o t_{AB} + \tfrac{1}{2} a t_{AB}^2 \\ \overline{AC} &= v_o t_{AC} + \tfrac{1}{2} a t_{AC}^2 \end{aligned}\right\} \text{Solve for } a \text{ and } v_o$$

then:

$$\overline{XY} = v_o(t_{XY}) + \tfrac{1}{2} a (t_{XY})^2$$

(c) CALCULATIONS TO DETERMINE SPACING BETWEEN MARKERS

Figure 5.1 (Cont'd) - CORRECTION FOR PROBE ACCELERATION

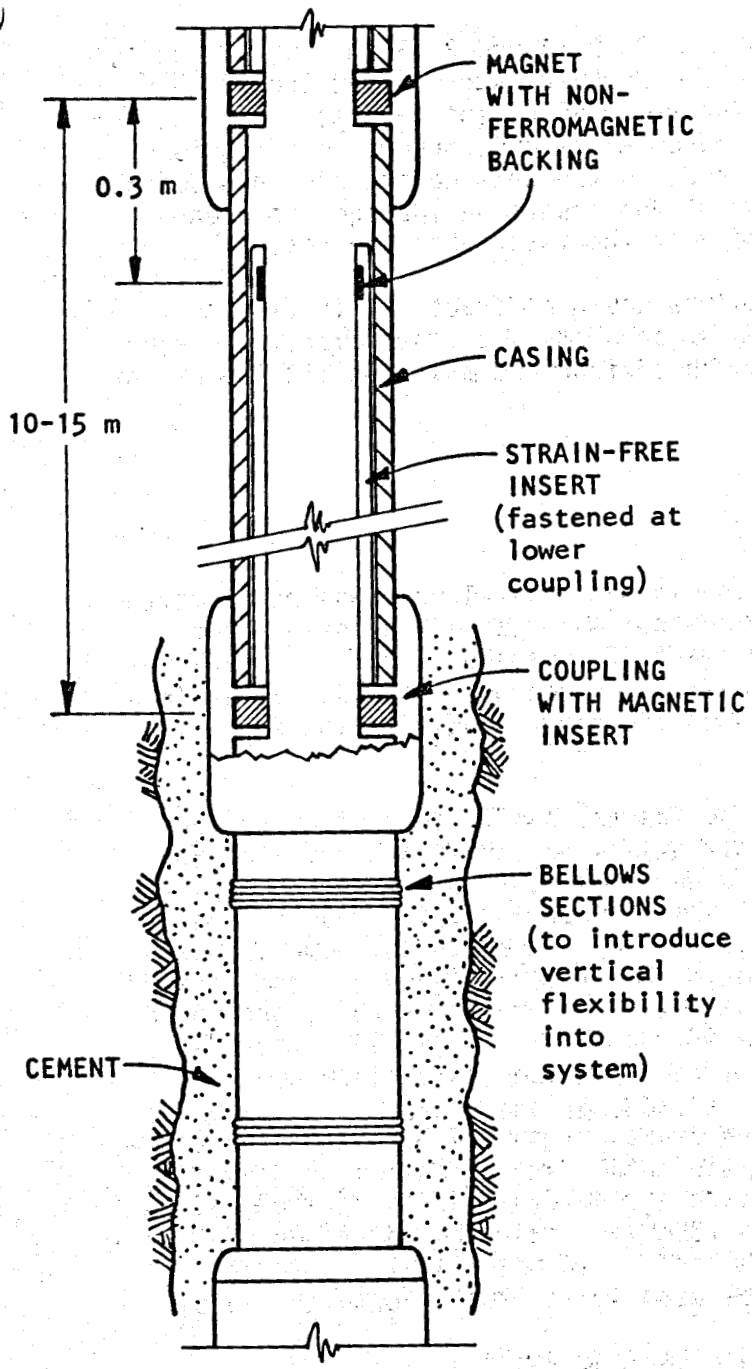

(a) STRAIN-FREE INSERT IN PRODUCTION CASING

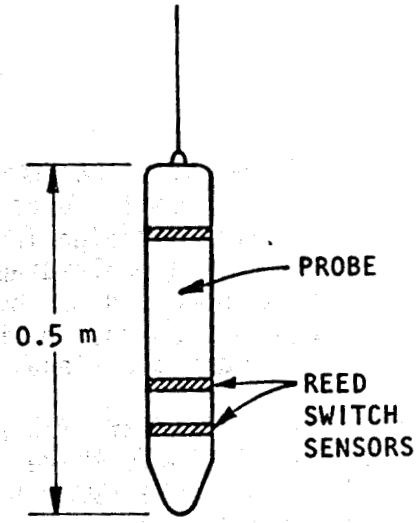

(b) PROBE FOR MONITORING CASING WITH STRAIN-FREE INSERTS

NOTES:

1) The probe has three sensors. From the strip chart record and from the known sensor spacing on the probe one can calculate the distance between the top of the insert and the coupling (See Figure 2.4 in main text).

2) The probe velocity can be also determined as the probe passes the strain-free insert. This can be used to check the distances calculated from the known lengths on the probe body.

Figure 5.2 - POSSIBLE APPLICATION OF STRAIN-FREE INSERT IN PRODUCTION WELL

with instruments proposed in Figures 2.13, 2.14 and 2.15 in the main text, the probe is small and easy to handle. However, strain-free inserts may be difficult to design for the geothermal environment for use in a flowing well. Where the hole diameter increases above each insert, scaling is likely to occur and may bond the insert to the well casing and thus defeat its purpose. Corrosion and erosion of the insert may damage its clean edges and make the signal at the edge of the insert hard to detect.

This application of strain-free inserts could be practical in flowing water or oil wells where environmental problems are less severe. However, in flowing geothermal wells, the harsh environment may prohibit the use of this monitoring technique.

6.0 MATERIAL PROBLEMS

6.1 Super-Invar

A relatively new controlled expansion alloy, Super-Invar, was not covered in Interim Report 3. Of available controlled-expansion alloys, Super-Invar has the lowest thermal coefficient of expansion: 3.6×10^{-7}°C or about one fourth that of Invar-36 over the range 0° to 100°C. Super Invar is available from Burleigh Instruments and their specification sheet is attached as Table 6.1.

For Super-Invar (Burleigh, 1979), the thermal coefficient of expansion increases rapidly above 200°C. Unit expansion curves are not available for Super-Invar as currently formulated and heat-treated, but an approximate curve is given in Figure 6.1. Where Super-Invar is used in field instrumentation over the range of geothermal temperatures, some problems may result. Length corrections due to temperature change are complicated by the non-linear relationship between temperature and strain, and where accurate knowledge of length change is important, it may be better to select 42% nickel alloy with a constant expansion coefficient over 0-300°C. Generally, the reason for selecting Super-Invar is to minimize the total length change due to temperature. From the limited data available (Figure 6.1), it appears that the total length changes of bars of Super-Invar and Low-Expansion "42" are essentially identical when raised from 0°C to geothermal temperatures (300°). Thus, the advantage of Super-Invar is lost over this temperature range. An additional limitation of Super-Invar is that it should not be used below -20°C (Burleigh, 1979).

6.2 High Temperature Electronics and Logging Tools

Current research in high temperature electrical and mechanical components for geothermal use and testing of prototype logging tools may provide techniques for construction of a geothermal compaction monitoring tool. While these topics were reviewed in depth in Interim Reports 2 and 3, some recent developments are summarized below.

TABLE 6.1

SUPER-INVAR DATA SHEET

Super-Invar is a special composition of a nickel/iron alloy with an extremely low thermal expansion coefficient: $\alpha \leq 0.36 \times 10^{-6}/°C$. The machinability of Super-Invar makes it ideal for many applications requiring thermal stability. Burleigh offers standard size rounds, bars and flats rough cut to a tolerance of ± .2cm with a mill quality surface finish. Maximum length of any piece is 180cm due to chamber limitations in the Super-Invar heat treating process.

TYPICAL SPECS OF SUPER-INVAR

Thermal Expansion Coefficient at 20°C (cm/cm/°C): $\leq 3.6 \times 10^{-7}$

Density (lbs/cu.in.): .294

Tensile Strength (p.s.i.): 69,800

Yield Strenght (p.s.i.): 43,900

Elongation in 2 in., %: 38

Modulus of Elasticity (p.s.i. x 10^6): 21.5

Poisson's Ratio: .234

Rockwell Hardness: R_b77

MACHINING

The machining of Super-Invar is only slightly more complicated than regular invar. Machining properties are similar to stainless steels. However, slower speeds will be required. An experienced machinist is necessary to achieve high quality surface finishes without cold working the material. Excessive heat generated during the machining process will anneal the Super-Invar and alter the thermal expansion coefficient. (Burleigh, 1979)

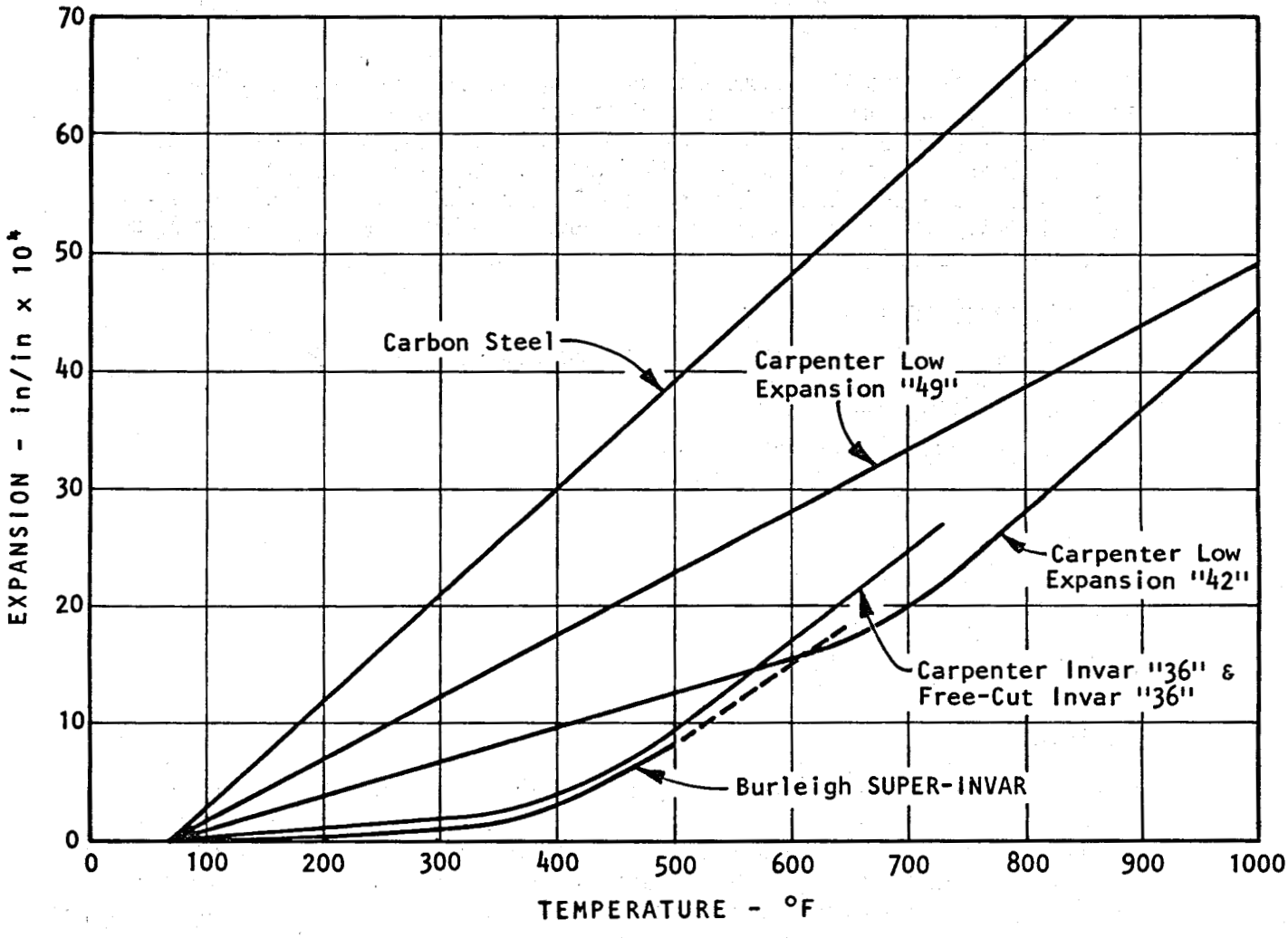

N O T E:

Curve representing SUPER-INVAR is an approximation and is based on a material with the same formulation but a different heat treatment (Burleigh, 1979). Dashed line is our extrapolation.

Figure 6.1 - EXPANSION CURVES FOR LOW EXPANSION ALLOYS

6.2.1 Basic Circuit Elements - In Table 2.20 and Section 2.3.2 (in main text) we summarized some of the on-going research in high-temperature electronics. Significant progress has been made and reported in the literature since that information was collected for Interim Report No. 3 in early 1978. In view of the rapidly changing state-of-the-art, we present here sources of information rather than a summary of current progress.

An excellent review (Dec. 1978) of high temperature devices, both active and passive, attachment and packaging techniques and circuit fabrication technology can be found in Palmer and Heckman (1978). Sandia Laboratories is a center of this research, and conducts in-house studies and manages outside contracts for DOE in high temperature electronics for its Geothermal Well Technology Logging Instrumentation Program. Further information on their programs can be obtained from Dr. A.F. Veneruso at (505) 264-9162. Another source of high temperature research results is the IEEE Transactions. At the IEEE Midcon Convention in Dallas (Dec. 1978), papers on high temperature electronics were presented by the Naval Research Lab, Harris Semiconductor, Sandia Labs, Micropac, Inc. and Seismic Engineering, Inc.

The rapidly growing knowledge in this area offers promise that suitable electronics and packaging will be available for a geothermal compaction logging tool within the near future.

6.2.2 Logging Tool Development - Development of basic circuit elements, discussed above, is the first step in the development of high temperature logging tools. These basic elements have been used to build more complex circuit components, including voltage regulators, line drivers, voltage comparators, special purpose amplifiers and multiplexers for high temperature use. Such devices are now being tested for use to 300°C (Palmer and Heckman, 1978). Construction and testing of complete logging tools is now feasible. In a recent test (Sandia Labs, 1979), a temperature logging tool operated successfully for 1-1/2 hours at 275°C and for 18 hours at 241°C in a geothermal well. Also tested were a flow tool, a low resolution pressure tool and a casing collar locator. The casing collar locator is an upgraded commercial model and currently is not accurate enough for subsidence logging (A. Veneruso, 1979, personal communication). Also under development are a borehole caliper and a borehole televiewer. A brief description of these tools may be found in Table 6.2. These developments listed above suggest that field-tested components for a subsidence monitoring system may be available within a few years.

6.2.3 Logging Accessories - In Interim Reports 2 and 3 we discussed several accessory components for a logging system which could improve current capabilities. The following paragraphs discuss recent advances in these areas.

Cooling System: DOE sponsored research on a refrigeration system to extend the temperature range of existing logging tools has focused on the development of a miniature reciprocating compressor, with steam as a working fluid. Currently, materials problems with respect to valves and

TABLE 6.2 - GEOTHERMAL LOGGING TOOLS UNDER DEVELOPMENT

Temperature	Design based on platinum-resistance transducer; Compatible with multi- and mono-conductor cables.
Pressure	Design uses high resolution quartz crystal pressure sensor.
Flow	Design is a high-temperature impeller-type transducer with signal feed-through mechanism.
Caliper	Upgrade commercial calipers by replacement of deficient metals, seals and transducer. Four-arm caliper to be developed first.
Borehole Televiewer	Uses an experimental acoustic sensor, based on a lead metaniobate transducer; Upgrade existing Mobil Oil-patented tool for geothermal use.

(Veneruso et al, 1978; Sandia Laboratories, 1978b; Wonn, 1978; and Veneruso and Stoller, 1978)

dynamic seals have slowed this research (A. Veneruso, 1979, personal communication).

Cables: Laboratory tests of two cables provided by Vector Cable Company have shown promising results. Aerospace Research Corporation tests of a 7 conductor-PFA teflon insulated cable and a monoconductor TFE insulated cable are encouraging. Leakage resistance of the 7 conductor cable dropped from 400 GΩ ($G = 10^9$) to no less than 132 MΩ under simulated geothermal well logging conditions but returned to normal after the test. The TFE monocable's performance was better even at higher temperatures (Sandia Laboratories, 1978b).

Seals: Metal O-Rings look promising for seals, as shown in Table 6.3a. Elastomers for dynamic seals, blowout preventers, cable insulation and other geothermal uses are under intensive study. Chevron USA tested many oil field rubbers in flowing steam at 450-475°F. Their test indicated that all the tested rubbers except Ethylene Propylene (EPR/EPDM) lost their resiliency (Snyder, 1978). Similar conclusions were reached by Hirasuna, et al. (1977). The applications of Ethylene-Propylene are limited, however, because it will not bond to metal (Snyder, 1978). Some high temperature elastometers are summarized in Table 6.3b. A new elastometer, Kalrez, is promising (but costly) and has been used in field logging tools at the Geysers (Snyder, 1978).

7.0 REFERENCES

A comprehensive reference list may be found in the main text of this report.

TABLE 6.3 - HIGH TEMPERATURE ELASTOMER AND SEALS
(Veneruso and Stoller, 1978)

(a) - HIGH TEMPERATURE SEALS

Type	Temperature Limitation	Performance
Elastomeric O-Rings	Polymer Decomposition 300°C	Reuse Permitted Least Dirt Sensitive
Metal O-Rings	Metal Softening 500°C	Reuse not Recommended Soft Plating Recommended Nick and Scratch Sensitive Minor Joint Motion Tolerated
Wave Rings	Metal Softening 500°C	Reuse Not Recommended Soft Plating Recommended Nick and Scratch Sensitive

(b) - HIGH TEMPERATURE ELASTOMERS

Trade Name	Type	Decomposition Temperature °C	Cost $/LB	Performance
BUNA N	NITRILE	150	6	Good Oil Resistance Poor Resistance to H_2S and Steam
VITON E- -C	FLUORO ELASTOMER	290	35	Fair Resistance to Steam Poor for H_2S
VITON G (Peroxide Cure)	FLUORO ELASTOMER	290	40	Improved Steam Resistance Poor for H_2S
KALREZ	FLUORO ELASTOMER (Fully Fluorinated)	400	2000	Best for H_2S Fair for Steam
EPR*	POLYOLEFIN	250	8	Excellent Steam Resistance H_2S Unknown
SILOXANE	SILICONE	300	17	Poor Steam and Poor H_2S Resistance

(Ethylene Propylene Terpolymers include EPR and EPDM)

GPO 694-290/108

Woodward-Clyde Consultants