LBL-8638 C.2
Preprint

Lawrence Berkeley Laboratory

UNIVERSITY OF CALIFORNIA, BERKELEY, CA

Materials & Molecular Research Division

Submitted to Physics Bulletin

JOSEPHSON EFFECT DEVICES

John Clarke

April 1979

RECEIVED
LAWRENCE
BERKELEY LABORATORY

AUG 28 1979

LIBRARY AND
DOCUMENTS SECTION

TWO-WEEK LOAN COPY

This is a Library Circulating Copy which may be borrowed for two weeks. For a personal retention copy, call Tech. Info. Division, Ext. 6782

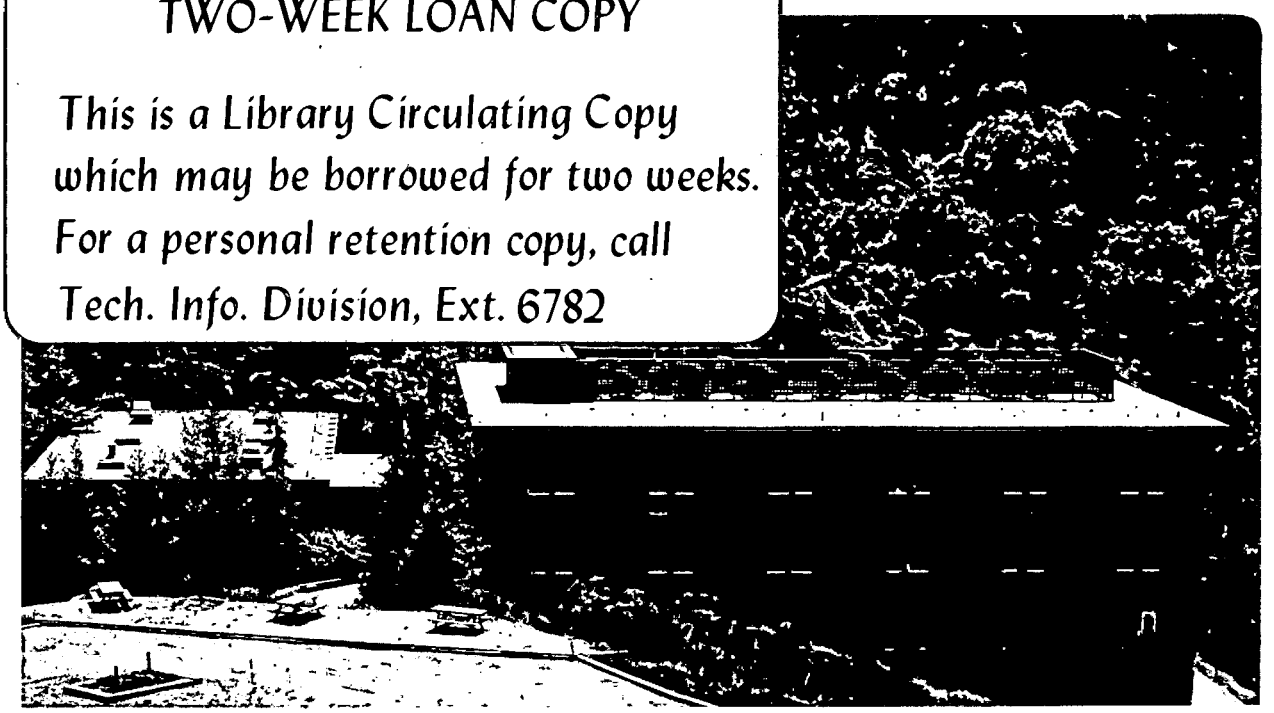

Prepared for the U. S. Department of Energy
under Contract W-7405-ENG-48

LBL-8638 c.2

DISCLAIMER

This document was prepared as an account of work sponsored by the United States Government. While this document is believed to contain correct information, neither the United States Government nor any agency thereof, nor the Regents of the University of California, nor any of their employees, makes any warranty, express or implied, or assumes any legal responsibility for the accuracy, completeness, or usefulness of any information, apparatus, product, or process disclosed, or represents that its use would not infringe privately owned rights. Reference herein to any specific commercial product, process, or service by its trade name, trademark, manufacturer, or otherwise, does not necessarily constitute or imply its endorsement, recommendation, or favoring by the United States Government or any agency thereof, or the Regents of the University of California. The views and opinions of authors expressed herein do not necessarily state or reflect those of the United States Government or any agency thereof or the Regents of the University of California.

JOSEPHSON EFFECT DEVICES

John Clarke*
Institut für Theorie der Kondensierten Materie,
Universität Karlsruhe, Karlsruhe, West Germany

INTRODUCTION

Superconducting devices based on the Josephson effect are by far the most sensitive voltmeters and magnetometers available, and are now used in applications ranging from magnetocardiology to geophysics. Computer memories and logic circuits involving Josephson junctions have switching speeds of tens of picoseconds; it is becoming increasingly likely that these circuits will be the building blocks of the ultrafast computers of the next decade. These are just two applications of the Josephson junction, which has finally left the exclusive laboratory of the low temperature physicist to play a significant role in the world of practical devices. In this article, I shall first explain the basic ideas involved in Josephson tunneling, and then describe some of the devices now in use.

* Guggenheim Fellow—on sabbatical leave from the Department of Physics, University of California, and Materials and Molecular Research Division, Lawrence Berkeley Laboratory, Berkeley, California 94720, U.S.A.

SUPERCONDUCTIVITY AND THE JOSEPHSON EFFECT

When they are cooled to a few degrees absolute, many metals and alloys become superconducting. The microscopic theory of Bardeen, Cooper, and Schrieffer tells us that in the superconducting state electrons with equal and opposite momenta bind together to form "Cooper pairs" with charge 2e. Each pair has zero net momentum and all pairs in a given superconductor can be described by a single macroscopic wave function with the same quantum-mechanical phase. One demonstration of the existence of the macroscopic wave function is flux-quantization. Suppose a ring is cooled through its superconducting transition temperature in the presence of an axial magnetic field and the field is then removed. A flux, Φ, will be trapped in the ring, maintained by a persistent supercurrent carried without resistance by the Cooper pairs. However, Φ cannot take an arbitrary value, but is quantized in units of the flux quantum, $\Phi_o = h/2e \approx 2 \times 10^{-15}$Wb : thus $\Phi = n\Phi_o$, where n is an integer.

Josephson tunneling provides a second illustration of the macroscopic quantum state. In 1962, Josephson proposed that Cooper pairs could tunnel through a thin insulating barrier separating two superconductors, as indicated in Fig.1(a). Since the tunneling involves electron pairs, rather than single electrons, the current flows through the barrier as a supercurrent, and no voltage appears between the two superconductors. This is the dc Josephson effect. The supercurrent, I, develops a phase difference $\phi = \phi_1 - \phi_2$ between the two superconductors according to the current-phase relation

$$I = I_o \sin\phi \ . \qquad (1)$$

The critical current, I_o, the maximum supercurrent the junction can sustain, depends on temperature and the properties of the barrier. If we force a current greater

than I_o through the junction, a voltage, V, will appear across the barrier, and part of the current will flow dissipatively. However, the Josephson current persists but now oscillates in time at a frequency

$$\nu = d\phi/2\pi dt = 2eV/h = V/\Phi_o \ . \qquad (2)$$

This is the ac Josephson effect.

Anderson and Rowell were the first to observe Josephson tunneling in a junction similiar to that illustrated in Fig.1(b). To make such a junction, we first evaporate a film of superconductor, for example, Nb or Pb, through a mask onto an insulating substrate, say glass or quartz. The film might be 0.3μm thick and 1 - 100μm wide. We heat the film in air (or oxygen) to grow an oxide layer (say) 3nm thick, and evaporate a cross strip of superconductor to complete the junction. When immersed in liquid helium at 4.2K the junction should display an I - V characteristic rather like that shown in Fig.1(c). As the current is increased from zero, a voltage jump occurs at $I = I_o$; when the current is reduced, the voltage does not return to zero until the current is almost zero. The hysteresis can be removed [Fig.1(d)] by a resistive "shunt" — a strip of normal metal connecting the two superconductors. It is important to realize that part of the current at low voltages in a shunted junction is carried by the ac supercurrent, which has a non-zero time average.

So much for the basic ideas: now let's see what we can do with them.

SQUIDS

The Superconducting QUantum Interference Device - SQUID - neatly combines flux quantization and Josephson tunneling. SQUIDs come in two varieties, dc and rf, and are by far the most highly developed and widely used Josephson devices.

The dc SQUID. The dc SQUID consists of two shunted junctions interrupting a superconducting ring [Fig.2(a)]. The constant bias current, I_B, ($>2I_o$) maintains a non-zero voltage across the SQUID, which has a non-hysteretic I - V characteristic. If we slowly vary the magnetic flux, Φ, threading the SQUID, the critical current oscillates as a function of Φ with a period that is just Φ_o. The critical current is a maximum for $\Phi = n\Phi_o$ and a minimum for $\Phi = (n+\frac{1}{2})\Phi_o$. The effect of the magnetic field is to change the phase differences across the two junctions; the oscillating behaviour arises from interference between the wave functions at the two junctions in a manner analogous to interference in optics: hence the term "Interference Device". At low voltages, the I - V characteristic is also modulated because the current contains a contribution from the time-averaged ac supercurrent. As a result, when the SQUID is biased with a constant current, the voltage is periodic in Φ with period Φ_o.

The dc SQUID developed by Wolf Goubau, Mark Ketchen and myself, and which we have used for a number of years, is shown in Fig.2(b). The two junctions, $10^4 \mu m^2$ in area, are formed between the Nb strips and the Pb tee, and each is resistively shunted. Two leads are attached as indicated. To measure the intrinsic noise of the device, we enclose it in a superconducting shield of Pb or Nb to eliminate ambient magnetic field fluctuations, immerse it in liquid helium, and bias it with a constant current. (In practice, the flux in the SQUID is modulated with an ac flux [not shown in Fig.2(a)], so that the SQUID is effectively operated at $\Phi \approx (2n+1)\Phi_o/4$ where $dV/d\Phi$ is a maximum.) A voltage change is amplified by a cooled transformer (not shown) and conventional electronics (see Fig.2(a)), and the output current is fed via a resistance, R_o, to a coil inside the SQUID. Thus, the SQUID is simply the null detector in a feedback circuit: a flux change $\delta\Phi$ gives rise to a current in the coil and hence a flux $-\delta\Phi$ that exactly cancels the applied flux. The output voltage, V_o, is proportional to the applied

flux. In this way, we can detect changes in flux much smaller than Φ_o.

In a typical SQUID, the inductance is 1nH, the total maximum critical current is 3μA, and the parallel shunt resistance is 0.5Ω. When Φ is changed from $n\Phi_o$ to $(n+\frac{1}{2})\Phi_o$ the critical current change is roughly 1μA, and the voltage charge across the SQUID is thus about 0.5μV, so that, $dV/d\Phi \approx 1\mu V/\Phi_o$. The measured rms flux noise, $\langle\Phi_N^2\rangle^{1/2}$, is typically $3 \times 10^{-5}\Phi_o Hz^{-1/2}$ for frequencies from $\sim 10^{-2}$ Hz to the upper operating frequency, ~40kHz. This resolution is determined by the Johnson noise voltage generated in the resistive shunts, and corresponds to a magnetic field resolution of about $10^{-14} THz^{-1/2}$. Alternatively we can express the sensitivity in terms of the energy resolution per unit bandwidth: $\varepsilon/1Hz = \langle\Phi_N^2\rangle/2L \approx 3 \times 10^{-30} JHz^{-1}$.

<u>The rf SQUID</u>. The rf SQUID, indicated in Fig.3(a), consists of a single, non-hysteretic Josephson junction interrupting a superconducting ring. The SQUID is operated by applying an rf·current, at typically 20 or 30 MHz, to an LC-resonant circuit, the inductance of which is coupled to the SQUID. The rf current thus induces an rf flux into the SQUID. When the quasistatic flux in the SQUID is changed, the amplitude of the voltage across the resonant circuit oscillates, again with a period Φ_o. The rf voltage is amplified and detected, and changes in the amplitude further amplified and fed back to the SQUID, just as in the case of the dc SQUID.

The rf SQUID has become more widely used than the dc SQUID, and is commercially available. The currently-popular configuration is shown in Fig.3(b). The junction is a Nb point contact, consisting of an oxidized pointed screw that presses onto a flat Nb surface. When properly adjusted, the point contact is a reliable Josephson junction with I - V characteristics similiar to those of a shunted tunnel junction. The contact is at the centre of a toroidal cavity formed by clamping together two

pieces of machined Nb. The rf coil is placed in the cavity. Since the SQUID is self-shielding against external magnetic fields, signals are coupled in via a second superconducting toroidal coil in the cavity. The flux resolution is usually limited by amplifier noise to about $2-3 \times 10^{-5} \Phi_o Hz^{-1/2}$. However, because the self-inductance is smaller, about 10^{-10}H, the energy sensitivity of this rf SQUID is almost an order-of-magnitude poorer than that of the dc SQUID.

Applications of SQUIDs. Both types of SQUID have been developed into highly reliable devices. For example, SQUIDs are routinely used as voltmeters in low temperature measurements. We apply the voltage to a resistor and inductor coupled to the SQUID [Fig.3(a)], and the resulting current induces a flux in the SQUID. The sensitivity is almost always limited by Johnson noise in the resistor. For example, for a resistance of $10^{-8}\Omega$, the voltage noise at 4.2K is about $10^{-15} VHz^{-1/2}$.

We can also use a SQUID to detect charges in magnetic field gradient. Figure 2(a) shows a superconducting flux transformer, made of Nb wire, which is balanced so that changes in the uniform magnetic field applied to the pick-up loops link no flux to the transformer, and hence induce no current in it. On the other hand, if there is a changing gradient of the form $\partial H_z/\partial z$, there will be a difference in the flux threading the two pick-up loops. Since the transformer must conserve flux, a supercurrent will be established that generates a flux in the SQUID proportional to $\partial H_z/\partial z$. Typical sensitivities are $10^{-13} Tm^{-1} Hz^{-1/2}$. The gradiometer is mounted in a fiber-glass cryostat containing liquid helium (but no liquid nitrogen) with a boil-off rate as low as 1ℓ per day. One intriguing application of gradiometers is to magneto-cardiology and magnetoencephalography. One places the cryostat close to the patient's chest or head, and records the magnetic signal, roughly 10^{-10}T and 10^{-12}T respectively. The gradiometer ensures a high rejection of ambient magnetic noise; in fact, a second derivative $(\partial^2 H_z/\partial z^2)$

is often used. These techniques are still very much at the experimental stage, but have already revealed information not available from conventional electrical methods.

The flux transformer is very versatile. One can make sensitive measurements of magnetic susceptibility by placing a tiny sample in one of the loops of Fig.2(a), and applying a uniform axial field. Alternatively, a single pick-up loop results in a magnetometer with a sensitivity that can be as high as 10^{-16} T $Hz^{-1/2}$.

Another application I'd like to mention is the geophysical work of Tom Gamble, Wolf Goubau and myself. We use two three-axis magnetometers, each consisting of three orthoganally mounted dc SQUIDs, to measure magnetic field fluctuations at the earth's surface at two points 5 - 10km apart. These fluctuating fields propagate down from the ionosphere and magnetosphere. At the same time, we measure the two orthogonal horizontal electric fields induced in the ground near the first magnetometer. This technique, known as magnetotellurics, is essentially a measurement of the surface impedance of the ground in a frequency range of 10^{-4} - 10^{3} Hz. We use the second magnetometer as a reference to "lock-in detect" the magnetic and electric field fluctuations at the first magnetometer. From these measurements we can estimate the surface impedance of the ground as a function of frequency to a precision of better than 1%, and hence model the conductivity of the earth as a function of depth. These measurements are of interest both for studying the earth's crust, and for surveying for natural resources.

Future prospects. More sensitive SQUIDs are already being developed, and I expect substantial improvements to take place in the next 1 - 2 years. It turns out that the energy sensitivity of the dc SQUID is inversely proportional to the square root of the junction capacitance, and hence of the junction area. Preliminary work at

Berkeley on SQUIDs with $100\mu m^2$ junctions produced an energy resolution of $\sim 4 \times 10^{-31} J\,Hz^{-1}$, while work at Bell Labs. with $1\mu m^2$ junctions produced an energy resolution of $\sim 10^{-31} JHz$. In both cases, the sensitivity was limited by extraneous noise sources that can (hopefully) be eliminated. In the case of the rf SQUID the intrinsic energy sensitivity scales with the rf frequency; a 9.3GHz SQUID at Stanford has a sensitivity of $7 \times 10^{-31} JHz^{-1}$, and further improvements are also expected. For both types of SQUID, I believe the ultimate sensitivity to be limited by shot noise in the junctions to $\varepsilon/1Hz \sim h$, and therefore to be limited by the uncertainty principle. Whether or not this limit can be reached remains a challenging issue.

COMPUTERS

To substantially increase the speed of present-day computers one needs not only to increase the speed of the individual switching elements, but also to decrease their separation; otherwise, the signal transit times limit the overall speed. To increase the packing density of the components one must reduce their dissipation to prevent the power generation per unit area from becoming prohibitively high. The requirements of high speed and low dissipation are met very neatly by Josephson devices. A major programme is underway at IBM (Yorktown Heights and Zurich) to develop a Josephson computer, and other, much smaller efforts, have recently started elsewhere. This field is already vast and complex, and I shall briefly describe only a simple memory cell and a logic device.

The IBM devices are switched by means of a pulse of magnetic field. When a magnetic field is applied in the plane of the tunnel junction of Fig.1(b), the critical current can be reduced almost to zero. Suppose the junction is biased with a current less than the zero field critical current, so that initially there is no voltage across the junction. When the magnetic field is applied, the critical current becomes less than the bias current,

and the junction makes an exceedingly rapid transition (the fastest reported is 24 ps) to a non-zero voltage, typically 2mV. If the magnetic field is removed, the junction remains in the voltage state, since the hysteresis prevents the switching to the zero voltage state until the bias current is reduced nearly to zero.

Memory cell. The prototype memory cell [Fig.4(a)] consists of a superconducting loop containing two Josephson tunnel junctions with hysteretic I - V characteristics (i.e. there are no resistive shunts). The "word", "bit", and "sense" lines actually overlay the loop, but are electrically insulated from it. The cell stores a "1" or "0" as a persistent supercurrent in the clockwise or anti-clockwise direction respectively. The cell can remain in either state indefinitely with no power dissipation. The cell is switched from one state to the other by two current pulses. For example, suppose the cell is initially in the "0" state. A pulse of current in the "word" line (in the direction shown) divides roughly equally between the two junctions, producing a large current in junction A, and a nearly zero current in junction B. The application of a current pulse in the "bit" line generates a magnetic field that drives A into the non-zero voltage state, but leaves B in the zero voltage state. As a result, the current initially in A is very rapidly diverted into B, until A returns to zero voltage. When the currents are removed, a clockwise current is stored in the cell, representing a "1". One can read the state of the cell non-destructively by applying suitable currents to the "word" and "sense" lines. These cells are designed to operate in arrays. The smallest cell that I know of has an area of $900\mu m^2$, a writing time of less than 80ps, and an energy dissipation (power-delay product) of less than 10^{-16} J per writing cycle. Thus, even if the cell were switched at its maximum possible rate, the power dissipation would be no more than 1μW.

Logic circuit. A simple logic circuit is shown schematically in Fig.4(b). A (hysteretic) Josephson junction is connected to a superconducting strip-line terminated with a matching resistor. The junction is overlaid with three superconducting control lines, X,Y, and Z, each insulated from the other and from the junction. A constant current I_B biases the junction in the zero voltage state. When a current pulse with the same polarity as I_B is applied to any one of the control lines, the magnetic field switches the junction to a non-zero voltage, and a current is established in the strip line. When the current pulse is removed, the junction remains in the voltage state. This process is the logical OR operation. The logical AND operation is performed by the simultaneous application of current pulses to all three control lines with polarities opposite to the polarity of I_B, thereby switching the junction out of the zero voltage state. Pulses with this polarity applied to one or two of the lines do not switch the junction. The same logic element can also perform INVERT and CARRY functions. The strip-line is one of the control lines for another junction, so that sequential logic operations can be performed. In practice, a logic delay of less than 200 ps and a power-delay product of about 5×10^{-15} J have been achieved. These logic elements have been used as the building blocks for various circuits, for example, adders, multipliers, and shift registers, all of which have operated successfully.

Future prospects. More refined memory cells and logic elements have been tested subsequently, for example, cells that involve the transfer of a single flux quantum, and three-junction interferometers that are used as in-line gates. New congifurations are still being developed and tested. At present, the switching speed of these devices is an order of magnitude faster than semiconductor computer elements, while, even more importantly, the dissipation is several orders of magnitude less. Thus, full advantage can be taken of the large scale integration

techniques developed by the semiconductor industry to build large numbers of devices on a single silicon chip with very high packing densities. Although many practical problems remain to be overcome, I'm enough of an optimist to believe that a Josephson computer will be operated in the not-too-distant future - say within 5 years.

HIGH FREQUENCY DETECTORS

Josephson detectors of microwave and far infrared electromagnetic radiation are widely studied. Let's consider the effect of microwaves of frequency f on a Josephson junction. Figure 5 shows the I - V characteristic of a non-hysteretic point contact irradiated with 4GHz microwaves. The microwaves reduce the zero voltage current and induce constant-voltage current steps at voltages

$$V_n = \pm nhf/2e \,, \qquad (3)$$

where n is an integer. Whenever the energy difference between Cooper pairs on opposite sides of the barrier, 2eV, is exactly equal to nhf, pairs can tunnel coherently through the barrier with the emission or absorption of n photons, thereby producing the steps. As far as is known, Eq.(3) is exact. In fact, the Standard Volts at the National Laboratories of the U.K., the U.S., and a number of other countries are now maintained and compared in terms of voltages at which steps are induced by microwaves of precisely known frequency.

There are several ways in which Josephson devices can be used to detect high frequency radiation:

<u>Broadband (square law) detector</u> Broadband radiation will not produce discrete steps, but, because Eq.(3) is satisfied by all frequencies for $n = 0$, it will reduce I_0. For small signal levels, the reduction in I_0 is proportional to V_f^2/f^2, where V_f is the rf voltage induced across the junction at frequency f. Thus, the device responds to the signal power, rather than the amplitude. Point contact junctions are almost invariably used, mounted

transversely across a waveguide or light pipe. One biases the junction with a current just above the critical current, so that changes in critical current induced by the radiation show up as changes in voltage. Although this detector has been intensively investigated, its performance compares somewhat unfavourably with other devices, for example, semiconducting and superconducting bolometers, and it is therefore unlikely to find widespread practical application.

Heterodyne Detector (mixer) In the most sensitive version of the heterodyne detector, a local oscillator with frequency f_{LO}, for example, a klystron, induces steps on the I - V characteristic of a point contact, as shown in Fig.5. A small signal at a frequency f_S is mixed with f_{LO} by the non-linearity of the junction to produce frequencies $|f_{LO} \pm f_S|$. In the case of interest, the intermediate frequency, $f_I = |f_{LO} - f_S|$, is much less than f_{LO}, and the mixing process amplitude modulates the effect of the local oscillator on the I-V characteristic at a frequency f_I. If the junction is current-biased at a voltage roughly one-half that of the n = 1 step, the voltage will oscillate with a frequency f_I and an amplitude proportional to the signal amplitude. The mixer noise temperatures that have been achieved vary from about 60K at 36GHz to 400-1000K at 452GHz. These noise temperatures appear to be the lowest reported in this frequency range, but do not represent substantial improvements over cooled Schottkey diode mixers. Furthermore, it is believed that these temperatures are close to the theoretical limit for a Josephson mixer, although the sensitivity is very far from the single-photon detection limit. Thus, the future outlook for this mixer is rather uncertain.

Parametric amplifier The Josephson junction has a non-linear inductance, $\Phi_0/2\pi(I_0^2 - I^2)^{1/2}$ $(I < I_0)$, and can, therefore, be used as a parametric amplifier. A number of different modes have been investigated. The most promising appears to be the version in which a series array of

(typically) 50 tunnel junctions with no external current bias are irradiated with a "pump" frequency f_P and a signal frequency f_S. The pump radiation modulates the non-linear Josephson inductance, so that the pump and signal frequencies are mixed to produce an "idler" frequency, f_{ID}. Of particular interest is the case $f_{ID} = 2f_P - f_S$ in which $f_{ID} \approx f_P \approx f_S$. In this particular mode of operation, two pump photons are transformed to a signal photon and an idler photon, thereby amplifying the signal. The best noise temperature reported so far at 10GHz is about 30K, which, again, is comparable with that obtainable with cooled conventional parametric amplifiers.

At present, the high frequency Josephson detectors do not offer a clear cut advantage in sensitivity over other devices, but the whole field is very active, and it remains to be seen which type of device will ultimately be the most sensitive.

CONCLUSIONS

In this article I have tried to give some feeling for the present state-of-the-art of Josephson effect devices. SQUIDs are relatively highly developed instruments, have no real competition from other devices, and are likely to become increasingly widely used over the years to come. The computer devices offer exciting possibilities because of their very high speed and very low dissipation, and it seems realistic to hope for a prototype computer within a few years. The status of the high frequency detectors remains uncertain: whether or not they ultimately offer the highest sensitivity depends to a large extent on advances with competing devices. Finally, I should add that I have had insufficient space to discuss all of the Josephson devices, and, in particular, that I have had to omit the rather ingeneous applications to standards. The interested reader will find a comprehensive coverage in the bibliography.

I should like to thank the members of the Institut für Theorie der Kondensierten Materie at the University of Karlsruhe for their warm hospitality while this article was written. I am grateful to the Guggenheim Foundation for financial support.

BIBLIOGRAPHY

Proc. IEEE 61, Jan.(1973): issue devoted to superconducting devices.

Superconductor Applications: SQUIDS and Machines (Plenum, New York, 1977), edited by B.B. Schwartz and S. Foner: most comprehensive account available.

FIGURE CAPTIONS

Fig.1(a) Schematic Josephson tunnel junction; (b) practical Josephson tunnel junction; (c) I - V characteristic of tunnel junction; (d) I - V characteristic of resistively shunted tunnel junction.

Fig.2(a) Dc SQUID in feedback circuit with a gradiometer coupled to it. (✳ represents a shunted junction); (b) practical dc SQUID.

Fig.3(a) Rf SQUID in feedback circuit with a voltmeter coupled to it. (✳ represents a shunted junction); (b) practical rf SQUID.

Fig.4(a) Memory cell and (b) logic circuit. In each case, ✳ represents an unshunted tunnel junction, and the various control lines overlay the junctions.

Fig.5 Constant-voltage current steps induced on non-hysteretic I - V characteristic by 4GHz microwaves.

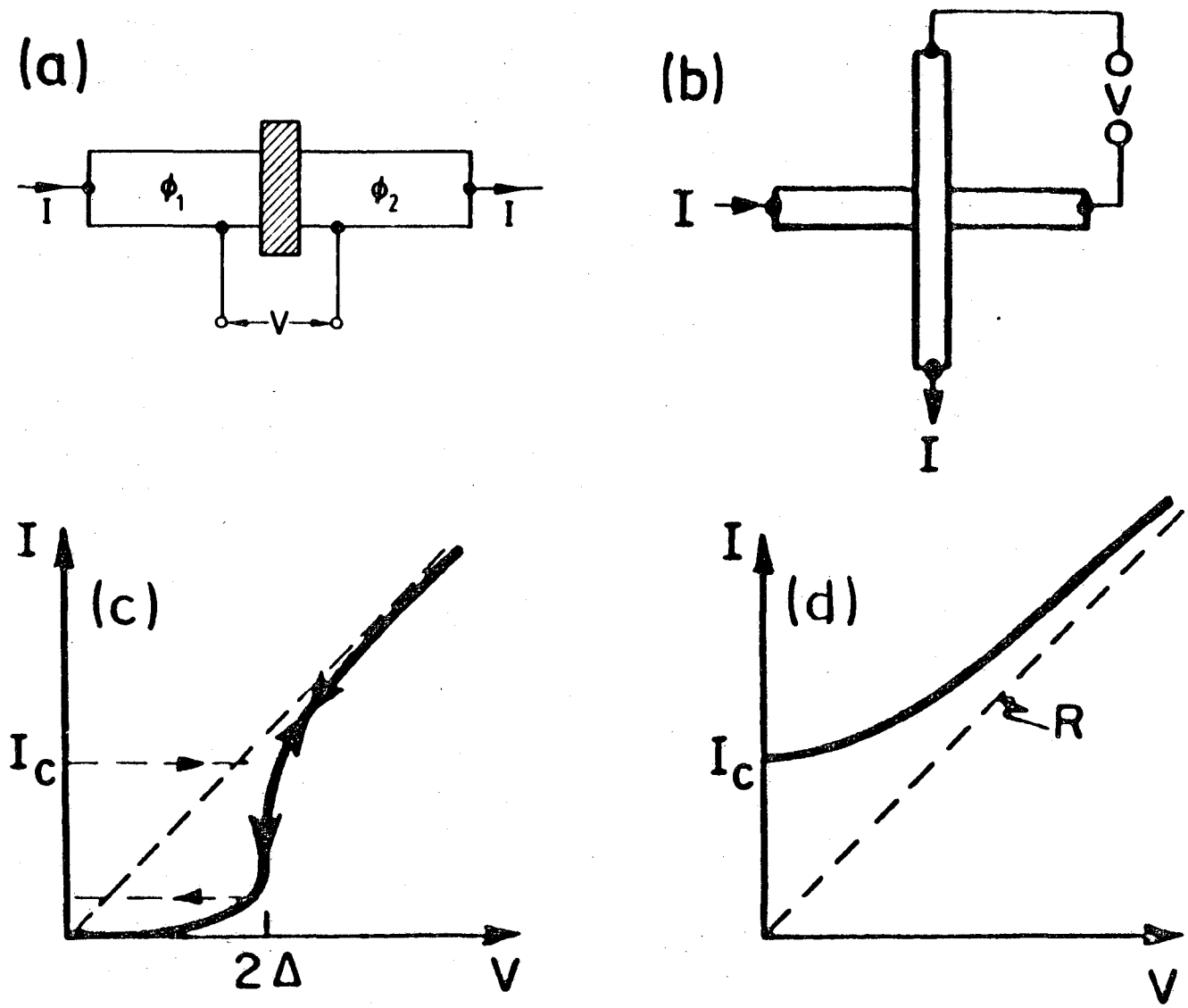

FIG. 1

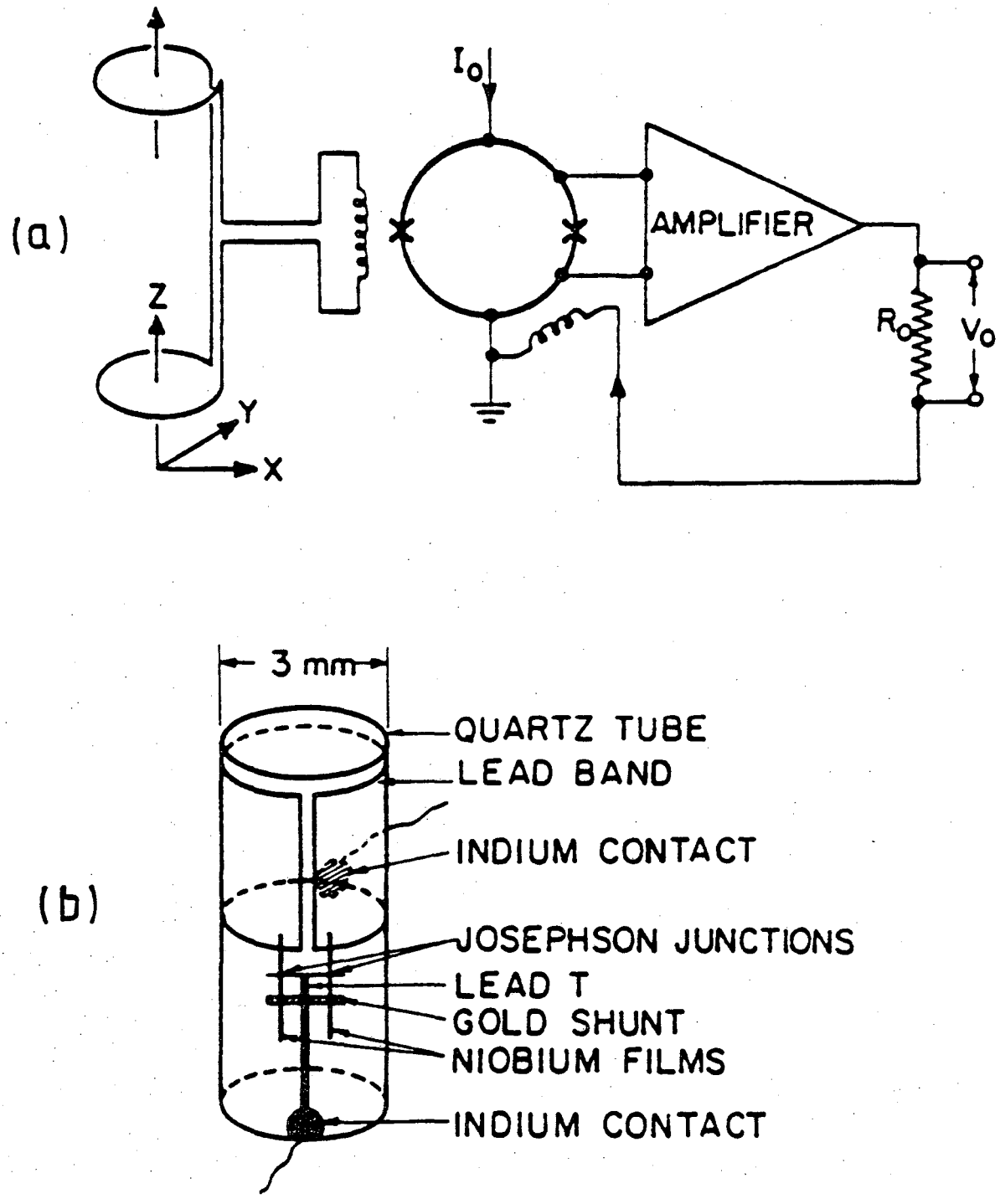
(a)
Z
Y
X
I_0
AMPLIFIER
R_0
V_0
(b)
3 mm
QUARTZ TUBE
LEAD BAND
INDIUM CONTACT
JOSEPHSON JUNCTIONS
LEAD T
GOLD SHUNT
NIOBIUM FILMS
INDIUM CONTACT

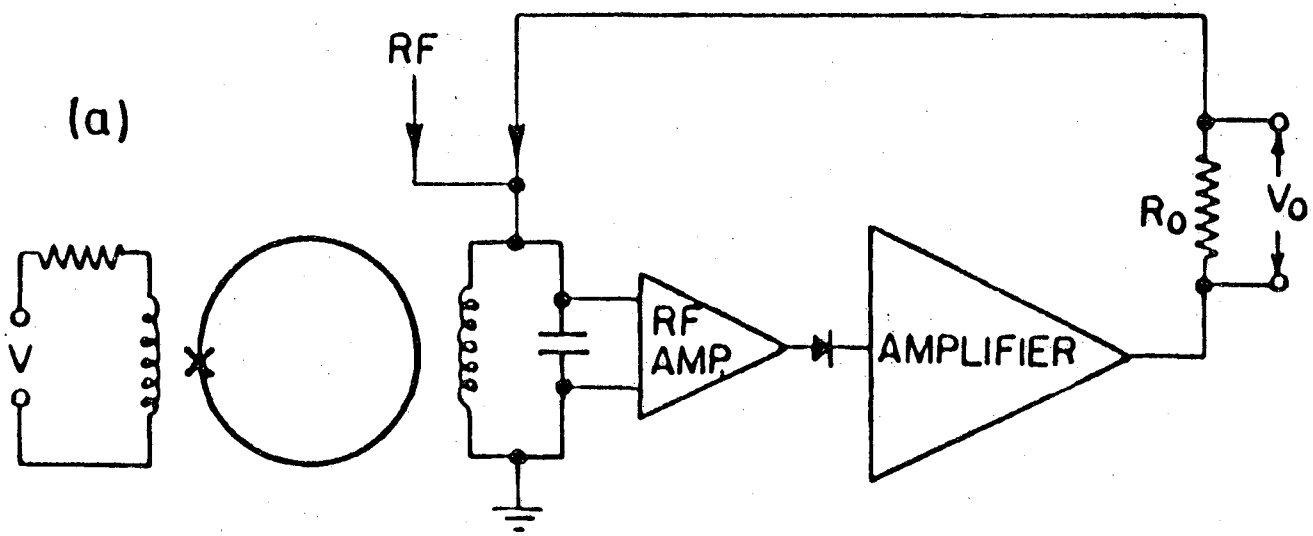
(a)
RF
V
RF
AMP
AMPLIFIER
R_O
V_O

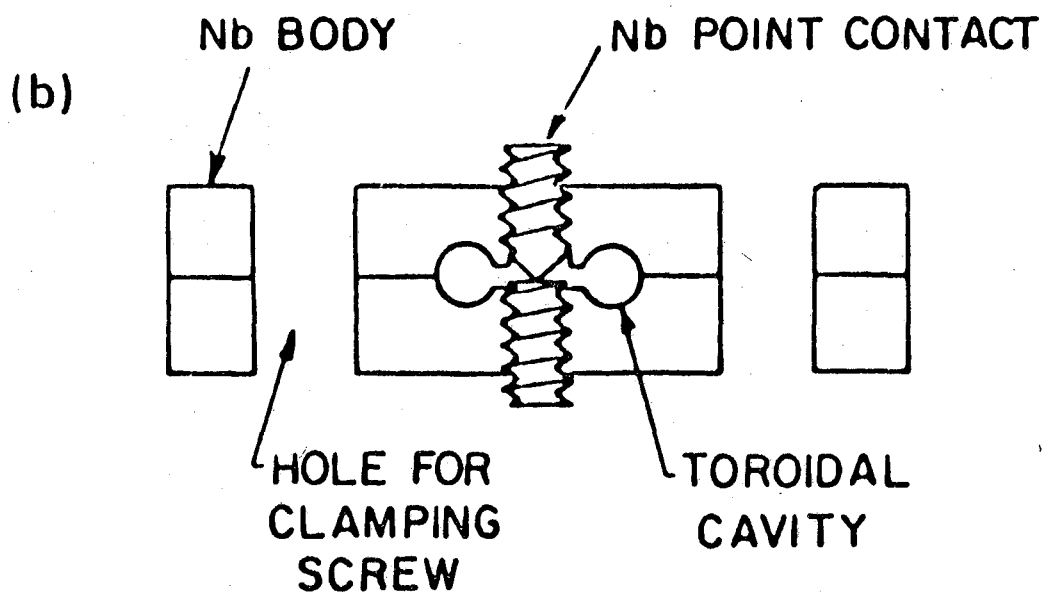
(b)
Nb BODY
Nb POINT CONTACT
HOLE FOR
CLAMPING
SCREW
TOROIDAL
CAVITY

FIG. 3

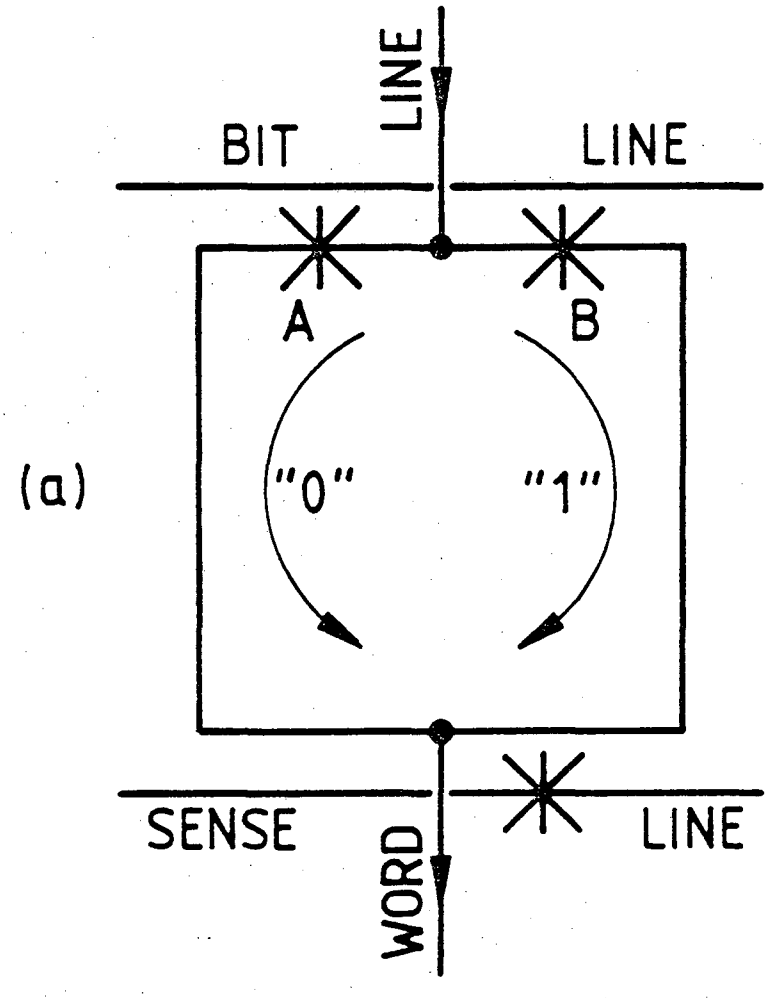
BIT
LINE
LINE
A
B
(a)
"0"
"1"
SENSE
LINE
WORD

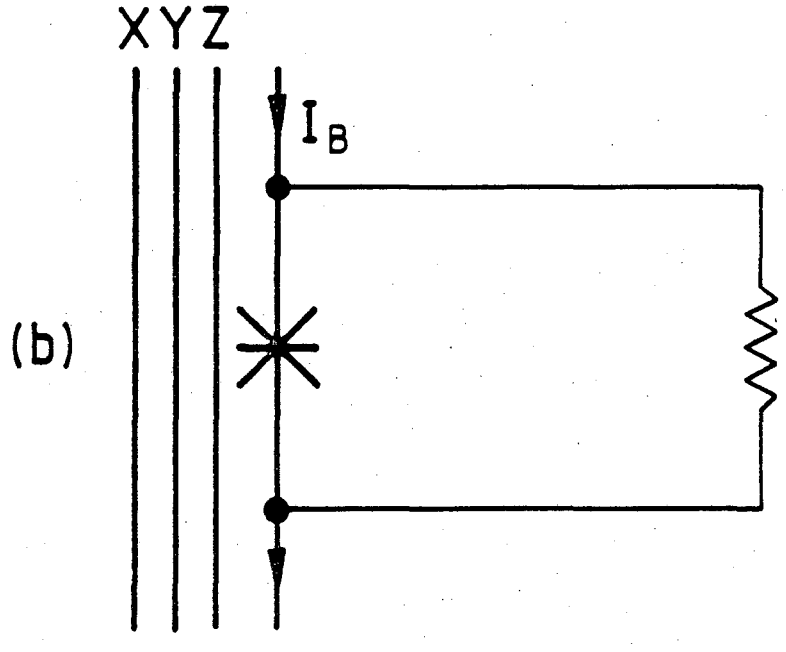
X Y Z
I_B
(b)

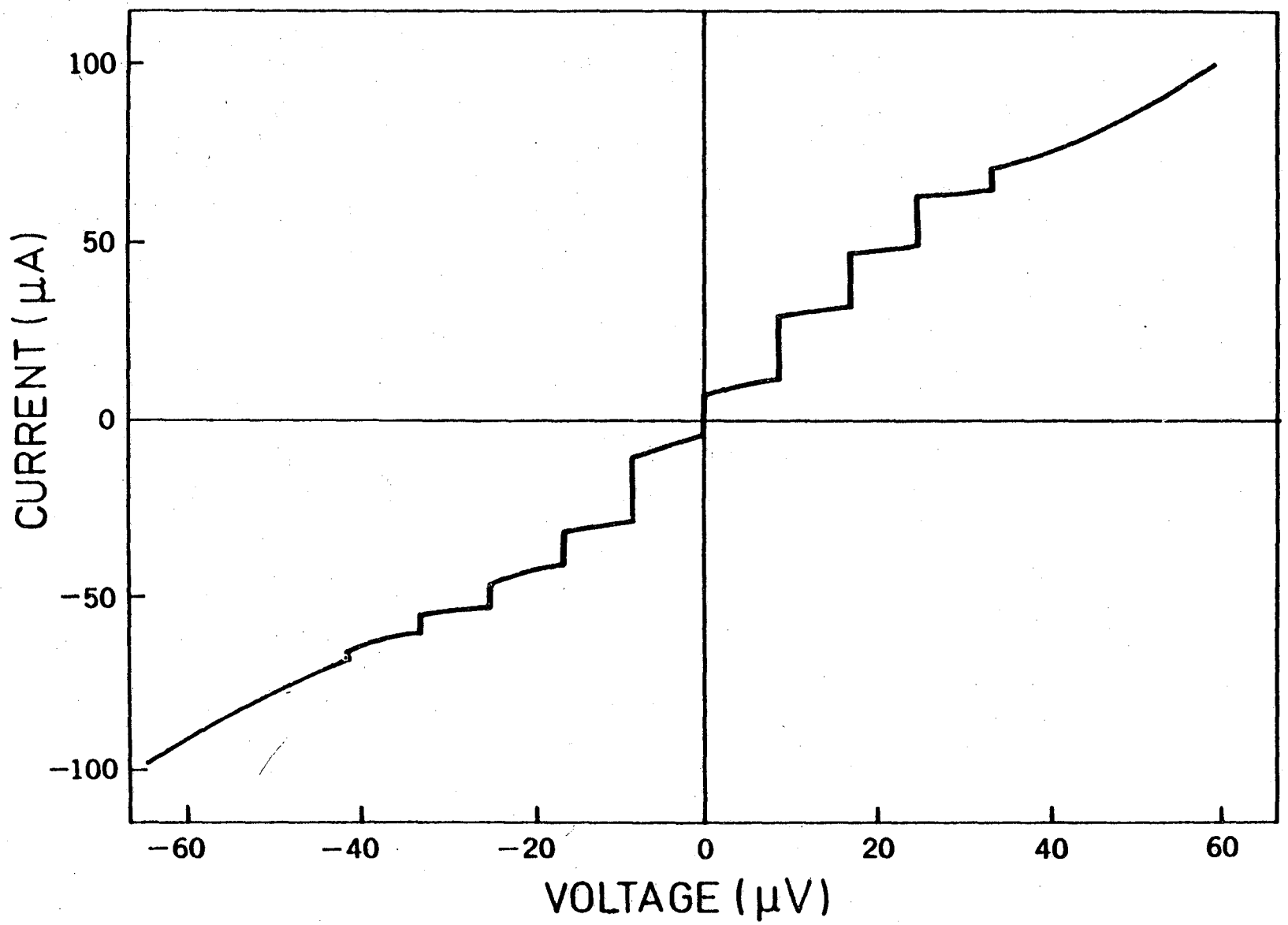

FIG. 5

This report was done with support from the Department of Energy. Any conclusions or opinions expressed in this report represent solely those of the author(s) and not necessarily those of The Regents of the University of California, the Lawrence Berkeley Laboratory or the Department of Energy.

Reference to a company or product name does not imply approval or recommendation of the product by the University of California or the U.S. Department of Energy to the exclusion of others that may be suitable.

TECHNICAL INFORMATION DEPARTMENT
LAWRENCE BERKELEY LABORATORY
UNIVERSITY OF CALIFORNIA
BERKELEY, CALIFORNIA 94720