Presented at the First Topical Meeting on
Fusion Reactor Materials, Miami Beach,
Florida, January 29-31, 1979

LBL-8643
CONF-790125--48

THE DEVELOPMENT OF LARGE RECTANGULAR CERAMIC INSULATORS FOR ION ACCELERATORS FOR THE NEUTRAL-BEAM PROGRAM

J. A. Paterson G. W. Koehler and T. J. Duffy

March 1979

Prepared for the U. S. Department of Energy
under Contract W-7405-ENG-48

MASTER

LAWRENCE BERKELEY LABORATORY
UNIVERSITY OF CALIFORNIA
BERKELEY

NOTICE
This report was prepared as an account of work sponsored by the United States Government. Neither the United States nor the United States Department of Energy, nor any of their employees, nor any of their contractors, subcontractors, or their employees, makes any warranty, express or implied, or assumes any legal liability or responsibility for the accuracy, completeness or usefulness of any information, apparatus, product or process disclosed, or represents that its use would not infringe privately owned rights.

LBL-8643

THE DEVELOPMENT OF LARGE RECTANGULAR CERAMIC INSULATORS FOR ION ACCELERATORS FOR THE NEUTRAL-BEAM PROGRAM*

J.A. PATERSON, G.W. KOEHLER and T.J. DUFFY

Lawrence Berkeley Laboratory, University of California, Berkeley, California 94720

The need for structures that are resistant to damage for 14 MeV neutrons, are bakeable, and that can be closely packed together, has resulted in the intensive development of rectangular brazed ceramic insulators for ion accelerators. The development of two candidate materials, machinable glass ceramic and alumina, is described along with the ceramic-to-metal brazing techniques developed for each material. The microstructures of the brazed joints are examined and the results of microprobe studies presented. It has been found that the surfaces produced by different machining methods have a significant effect on the strength of brazed joints to the machinable glass ceramic. Lapped surfaces have given bond strengths up to three times those produced with other surfaces. Successful full-size brazes have been realized between alumina and titanium and between machinable glass and titanium. Vacuum tight joints between machinable glass and titanium have not been reliably achieved and more work is needed before brazing techniques to this promising new material are fully understood.

1. INTRODUCTION

The current generation of tokamak and mirror fusion experiments willuse neutral beam injection for plasma heating. The ion accelerators of these injection systems consist of precision assemblies of accelerating electrodes separated by rectangular insulating sections. For experiments such as the Tokamak Fusion Test Reactor (TFTR) and Doublet III these insulating sections also form the vacuum wall. The general desirability of having bakeable structures, the requirement of hard seals for the TFTR, and the necessity of the rectangular geometry, has thus resulted in an intensive effort to develop large ceramic to metal brazements. At the onset of this effort there was a severe materials availability problem. Alumina ceramics, while available in large circular sections, had never been manufactured in rectangular forms of the size required; in addition there was doubt as to whether techniques developed for successful ceramic to metal seals in circular sections could be applied to rectangular assemblies where stress concentrations at the corners are high. The close tolerances that are required of these insulating sections and the benefits of close packing of accelerators, particularly in mirror machines, make machinable glass ceramics an attractive alternate material. The machinable glass ceramic selected for development was Corning Glass Works code 9658 Machinable Glass Ceramic [1]. As MGC is a new material, no reliable high temperature brazing techniques had been developed for producing vacuum tight seals. In addition, no material had ever been manufactured in the size required for the ion accelerators. Nevertheless, the potential benefits of the successful development of this material and related brazing techniques were considered to make the parallel development with alumina worthwhile.

*This work was supported by the Magnetic Fusion Energy Division of the U.S. Department of Energy under Contract No. W-7405-ENG-48.

2. MACHINABLE GLASS CERAMIC (MGC)

Corning Glass Works code 9658 Machinable Glass Ceramic is a boro-alumino-silicate glass matrix in which mica crystallites of size 5-10 microns are dispersed [1]. This structure allows the material to be machined to close tolerances with standard machining techniques.

2.1 Test brazes

Fig. 1 compares the linear thermal expansion of MGC and commercially pure titanium. As can be seen from this figure, these materials have a very close expansion match with a cross-over point at around 500°C. Also shown in Fig. 1 is the tensile stress build-up in the MGC caused by the expansion mismatch during the cooldown from the brazing temperature, point A. An elastic analysis of the stress indicates that excessive stresses would be produced in the ceramic. However, titanium stress relieves at 540°C; thus, in principle, it should be possible to relieve the locked in stresses at point B by a temperature hold during cooldown. Further cooldown from this point would cause the stresses to pass through a maximum at point C and reduce towards zero at room temperature. To verify the stress relief of titanium and the resulting low stresses induced in the ceramic, brazing tests were conducted on linear samples. The braze filler used was NiCuSil 3 (liquidus 795°C solidus 780°C), and the MGC was metalized by coating the surface with titanium hydride in a mixture of parlodion and amyl acetate. After brazing at 830°C maximum firing temperature, strain gauge rosettes were fixed to the MGC and the MGC was detached from the titanium. This technique indicated the maximum principal stress in the ceramic to be 2 MPa tensile, much less than that predicted by elastic theory.

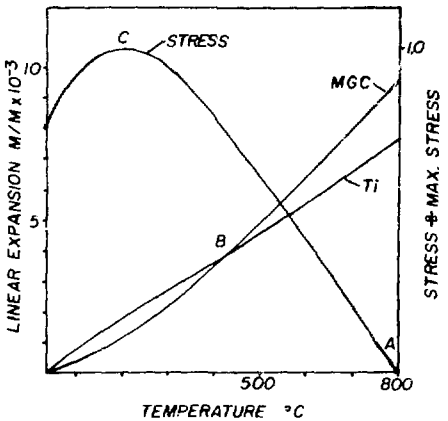

Fig. 1. MGC and titanium thermal expansion. Thermal Stress during cooldown.

A typical section through a MGC to titanium braze joint using the above filler and active metal brazing process is shown in Fig. 2. The upper dark material is the MGC and the titanium is the extreme lower layer. As can be seen in this micrograph the braze filler has separated into five distinct layers. The compositions of these layers were determined using energy dispersive x-ray analysis. The layer immediately adjacent to the MGC surface is mainly copper and titanium in roughly equal proportions. This layer also contains some 4% silicon from the MGC indicating diffusion between the braze filler and the ceramic has taken place. The two light colored layers are silver rich comprised of 96% silver and 4% copper. The existence of these thick silver rich layers is believed to give beneficial ductility to the braze joint. The central layer contains titanium and copper in roughly eutectic proportions (24% Ti, 76% Cu) with minor constituents silver and nickel also being present. The final layer immediately adjacent to the titanium surface is mainly a titanium-copper layer with small amounts of silver present. Also shown in Fig. 2 is the existence of a void in the braze filler. In our tests these voids frequently appeared and were always located in a silver rich layer probably due to solidification shrinkage. Because of their size and widely dispersed occurrence, it was not believed that these voids represented a serious threat to the vacuum integrity of the joints.

Having established the feasibility of brazing titanium to MGC a series of brazing tests was conducted to determine the optimal surface cleaning methods and the strength of the brazed joints obtained. Alternate metalizing techniques were also investigated, however, attempts to vapor deposit titanium and nickel to the MGC proved unsuccessful; the adherence of the metalized layer being extremely poor similar to the experience of Brown and Tobin [2]. Compression shear tests of sample coupons gave braze-bond strengths of the order of 20 MPa.

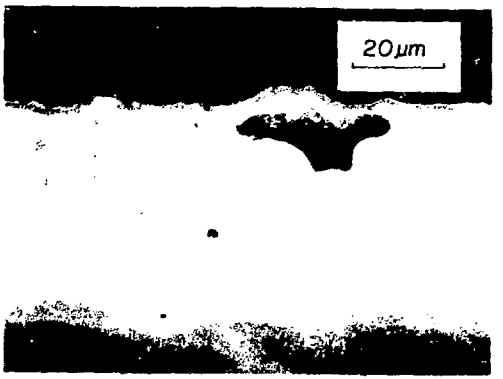

Fig. 2. MGC to braze micrograph

2.1 Effect of surface finish

In contrast to other ceramics and glasses the strength of MGC is relatively insensitive to surface flaws. It is known, however, that grinding introduces a substantial deformed layer in semi-brittle ceramics and cleavage and intergranular fractures in brittle ceramics [3]. In order to determine whether brazed bond strengths could be increased with different surface finishing techniques a series of brazing tests was conducted. The range of surface finishes varied from milled to ground and lapped surfaces. Samples were prepared and brazed with TiCuSil 3 and titanium hydride and then tested in compression shear. The surfaces of the samples were examined by Scanning Electron Microscopy both before and after the tests. The MGC surfaces before brazing are shown for two conditions in Figs. 3 and 4. Fig. 3 shows the surface produced by a carbide cutter; here it can be seen that the glassy phase has been torn away from the surface, leaving the mica crystals exposed. In contrast the ground and lapped surface in Fig. 4 has a smooth appearance. Grinding alone produces a surface similar to Fig. 3 but with areas of plastic flow visible as regions of smeared glassy phase. Compression shear tests of the brazed samples gave dramatically different results over the range of surface finishes. A surface such as that shown in Fig. 3 produced bond strengths on the order of 20 MPa while a ground and lapped surface failed at up to 60 MPa. For all tests the failure occurred in the ceramic subsurface leaving a thin ceramic layer on the braze. Analysis of this layer showed that for the lower strength bonds this layer consisted mainly of detached mica crystals and regions of smeared glassy phase, while for the high strength bonds it tended to be thicker and similar to the bulk MGC. It is concluded that machining operations which remove the glassy phase exposing the loosely bonded mica crystals result in weak braze joints.

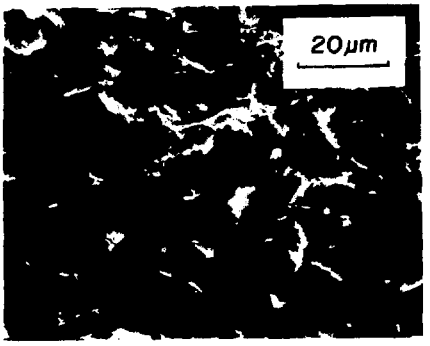

Fig. 3. MGC Surface using carblde cutter

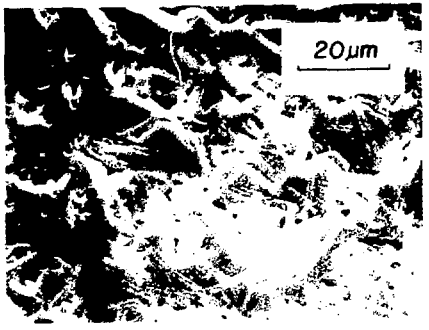

Fig. 4. MGC surface after grinding and lapping

This is because the braze filler bonds to these mica crystals which can later detach from the parent material as a result of the buildup of shear stresses. The smeared over glassy phase regions present in ground surfaces also appear to be loosely bonded to the parent material and should be removed by a lapping operation prior to brazing.

2.3 Full-size brazements

After receipt of the large MGC slabs from the manufacturer great difficulty was experienced in machining them. It was discovered that residual stresses in the order of 48 MPa were present in the material; these caused cracks to develop during the machining process. This problem was overcome initially by the adoption of special machining techniques and finally by putting the slabs through a heat treatment process. The ceramic was cleaned prior to brazing by clean firing in air at 705°C. Higher firing temperatures were originally specified but dimensional changes resulted which were outside the acceptable manufacturing tolerances. As it was necessary to perform the full-size braze at an outside vendor it was anticipated that significant time delays could occur between various stages in the assembly. Due to the rapid surface oxidation of titanium, a protective coating is necessary to prevent oxides forming after final cleaning operations and before brazing. Tests indicated that the sulfamate nickel process applied to a hydrofluoric acid etched surface gave good wetting characteristics with NiCuSil 3 braze alloy. Strength tests on samples with this nickel plating gave similar results to these on unplated titanium surfaces. Thus this process was adopted for the full-size brazes.

At the time of the first full-size braze the importance of surface finish was not appreciated and the results were disappointing. The ceramic survived the brazing cycle but it was discovered that large sections of the ceramic were not attached to the titanium sections. Also, the ceramic was coated with titanium which had sublimed off the surfaces of the fixtures which presumably had been overheated as a result of their location in the furnace. Test samples were prepared by the same processes as the full-size braze and they were subjected to the same time-temperature braze cycle. Care was taken to introduce the same time delays as in the full-size braze. This amounted to some five days between final assembly and the actual brazing cycle. A test was also carried out on samples minimizing the time delays and using a modified brazing cycle which reduced the time at temperature. No significant difference in the resulting brazes was noted. Sections through one of these brazes are shown in Figs. 5 and 6. As before the light areas represent regions of high silver content alloy and the darker regions alloys of titanium and copper. The nickel plating has completely dissolved from the titanium surface and is dispersed throughout the titanium copper regions. By comparison with Fig. 2 it can be seen that, rather than forming thick layers, the ductile silver-rich alloy has been broken up into small isolated regions surrounded by the hard titanium-copper-nickel alloy. Fig. 6 clearly shows the adverse result of the braze alloy filleting up the MGC surface where the initiation of a crack in the MGC is in evidence.

The full-size braze was repeated with lapped MGC surfaces, chamferred edges, modified fixturing, reduced time at temperature cycle, stress relieved MGC and the minimum of time delays between cleaning and the braze cycle. The resulting brazement is shown in Fig. 7. This braze was determined to have 4 vacuum leaks. These leaks were plugged with an inorganic binder* and the whole assembly was baked at 100°C in air.

Subsequent to the vacuum sealing of the insulator, it was necessary to remove the nickel plating from the titanium surfaces. During this process the assembly was inadvertently thermally shocked by immersion into a 60°C acid bath resulting in the complete detachment of one of the braze joints. Examination of this joint suggests that insufficient braze alloy was applied to the surface and that this, coupled with the embrittlement of the braze, resulted in failure when thermal stresses were induced.

*Ultrabond 552. Aremco Products, Ossining, N.Y.USA

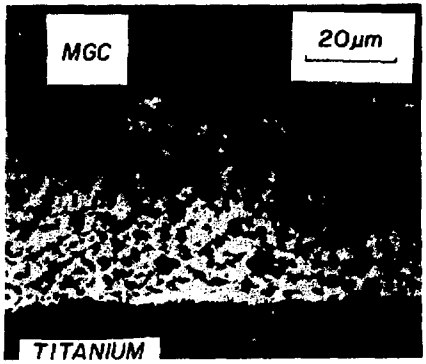

Fig. 5. MGC-Ti braze micrograph

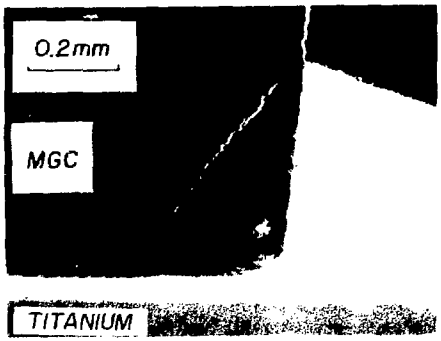

Fig. 6. Corner of MGC-Ti braze

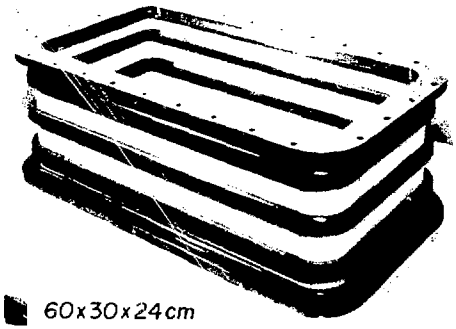

Fig. 7. Full-size MGC-Ti brazement

3. ALUMINA

Two industrial sources are currently being developed for alumina ceramic insulators of the size and geometry required for the neutral beam accelerators.** Due to availability, our tests were only conducted on ceramic with a 94% alumina content. This material was specified over higher alumina content materials as it is known that materials with a higher proportion of glassy phase are easier to metalize [4].

3.1 Test brazes

Titanium was selected as the conductive material because of its thermal expansion, non-magnetic properties, reactivity in brazing process, and weldability. Niobium, while having superior thermal expansion match to ceramics was not selected because of availability problems and cost.

As with MGC the braze filler selected was NiCuSil 3 and the active metal titanium hydride process was adopted for metalization of the ceramic. To accommodate the expansion mismatch between the alumina and titanium a 1.6 mm thick copper section was sandwiched between them. Results of brazing tests with this method were encouraging and many successful vacuum tight joints were achieved between alumina and thick titanium. A test braze was conducted on an out-of-tolerance full-size insulator section using the copper sandwich techniques. During this braze fractures occurred in the bulk ceramic which led to the abandonment of this method as a feasible approach.

3.2 Full-size braze

As a result of the test brazes, a more traditional approach was adopted to achieve the ceramic to metal seal. It was decided to construct the insulator assembly in stages. First, the ceramic to metal seal was produced by brazing the ceramic insulator sections to 0.9mm thick titanium backed up by an alumina ring brazed to the other face of the titanium. In this way ceramic to metal subassembly brazements can be manufactured. These subassemblies are later spot welded to thick titanium electrodes and the vacuum seal is effected by a fusion weld. A typical ceramic-to-metal joint detail is shown in Fig.8 To date a single subassembly has been successfully brazed and welded to a thick titanium flange. This insulator section is shown in Fig. 9.

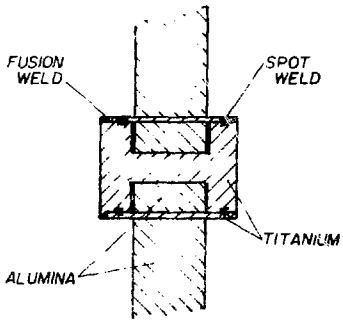

Fig. 8. Typical alumina to Ti joint detail

**Western Gold & Platinum, Belmont, CA. USA
Coors Procelain, Golden, Colo. USA

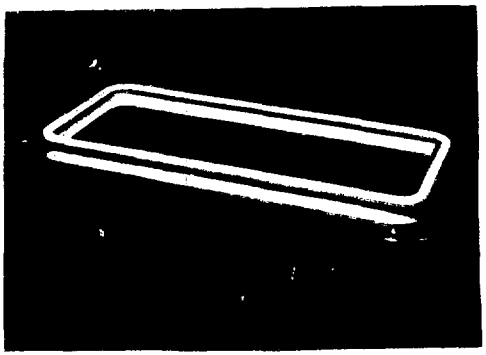

Fig. 9. Full-size alumina-Ti brazement

4. DISCUSSION AND CONCLUSIONS

4.1 Machinable glass ceramic

It is believed that the embrittlement of the braze as a result of the nickel plating and the lack of braze filler are the major reasons for the final failure of the brazed assembly. Although it is felt that successful brazes using MGC are close to being achieved, more work needs to be done before the process is fully understood. Corning code 9658 ceramic was originally developed as a machinable glass and its use in high temperature brazing applications is a new application. It is known that fluorine starts to evolve from the MGC surface at between 600 and 700°C forming hydrogen fluoride gas [5]. In addition to its possible effect on the braze HF will etch out Boron from the MGC surface to a depth of 10 microns with possible deleterious effects on the braze joint. Alternate metalizing techniques should be pursued to remove the uncertainties introduced by the sensitivity of the titanium hydride process, and to allow rebrazing of assemblies to repair vacuum leaks. The elimination of the nickel plating on the titanium surfaces should result in more ductile brazes and will remove the need to acid etch this material off subsequent to brazing.

4.2 Alumina

A successful technique for manufacturing large ceramic insulators for neutral beam accelerators has been developed. The modular approach offers reduced risk over the one-step method and allows the replacement of individual sections to effect repairs.

ACKNOWLEDGMENTS

The authors wish to thank the personnel of the machine shops at Lawrence Berkeley Laboratory for their dedicated efforts during this development. Particular thanks are extended to W. Lawrence of the Ceramic Shop. Thanks are also due to Rich Lindberg who performed the microprobe analyses and Dr. K. Chyung of Corning Glass works for his helpful discussion.

REFERENCES

[1] G.H. Beall, K. Chyung, D.G. Grossman and G. P. Smith, "Machinable Glass Ceramics, New Materials for Electrotechnical Applications," World Electrotechnical Congress, Moscow, U.S.S.R., (June 1977).

[2] T. Brown and A. Tobin, "Development of Large Insulator Rings for the Tokamak Fusion Test Reactor," 7th Symposium on Engineering Problems of Fusion Research, Knoxville, Tenn. (1977), 1007.

[3] B.G. Koepke and R. J. Stokes, "Grinding Damage in Ceramics," SME Tech Paper IM77-358 (1977).

[4] H.E. Pattee, "Joining Ceramics to Metals and Other Materials," Welding Research Council Bulletin 178 (1972).

[5] V.O. Altemose and A.R. Kaeyon, Corning Glass Works, Private Communication.