Submitted to Paper Trade Journal

LBL-8735 c.2
Preprint

GEOTHERMAL RESOURCES AND THE U. S. PULP AND PAPER INDUSTRY

J. H. Howard and J. V. Davey

RECEIVED
LAWRENCE
BERKELEY LABORATORY

JUN 28 1979

LIBRARY AND
DOCUMENTS SECTION

May 1979

Prepared for the U. S. Department of Energy
under Contract W-7405-ENG-48

TWO-WEEK LOAN COPY

This is a Library Circulating Copy which may be borrowed for two weeks. For a personal retention copy, call Tech. Info. Division, Ext. 6782

LAWRENCE BERKELEY LABORATORY
UNIVERSITY OF CALIFORNIA
BERKELEY

LBL-8735 c.2

DISCLAIMER

This document was prepared as an account of work sponsored by the United States Government. While this document is believed to contain correct information, neither the United States Government nor any agency thereof, nor the Regents of the University of California, nor any of their employees, makes any warranty, express or implied, or assumes any legal responsibility for the accuracy, completeness, or usefulness of any information, apparatus, product, or process disclosed, or represents that its use would not infringe privately owned rights. Reference herein to any specific commercial product, process, or service by its trade name, trademark, manufacturer, or otherwise, does not necessarily constitute or imply its endorsement, recommendation, or favoring by the United States Government or any agency thereof, or the Regents of the University of California. The views and opinions of authors expressed herein do not necessarily state or reflect those of the United States Government or any agency thereof or the Regents of the University of California.

To be Submitted to Paper Trade Journal

GEOTHERMAL RESOURCES AND THE U. S. PULP AND PAPER INDUSTRY*

J. H. Howard and J. V. Davey

Prepared for U. S. Department of Energy under contract
W-7405-ENG-48

---

*This article is based on a talk given at the Workshop on Industrial Process Applications for Geothermal Energy Resources held at Massachusetts Institute of Technology (Cambridge, Mass.) in October 1978. The report referred extensively to data from the American Paper Institute (New York, NY) and to a study done by DSS Engineers, Inc. (Ft. Lauderdale, FL), entitled "Geothermal Resource Utilization--Pulp and Paper Industry," published in March 1975. The authors wish to thank the organizers of the MIT Conference, Professor Bord Mikic in particular, for the encouragement to prepare this material. They also wish to thank Ms. Jane Kingston of the Technical Information Department, Lawrence Berkeley Laboratory, for her assistance in organizing this manuscript.

I. INTRODUCTION

What is the pulp and paper industry to do about the worsening problem of energy? Demand for purchased energy has shown only a slight decline in recent years. On the other hand, the price of energy has been driven up steeply. Can the industry turn to new sources of energy to help alleviate this problem? This paper will discuss the prospects for geothermal resources as a source of energy to the pulp and paper industry.

II. U. S. PULP AND PAPER INDUSTRY ENERGY SUPPLY/DEMAND SITUATION

The pulp and paper industry ranks fifth--behind the chemicals, basic metals, petroleum, and stone and clay products industries--as an energy consumer in the United States. These top five industries use 73 percent of all purchased energy in the nation. The pulp and paper industry consumes 10 percent of this amount. Production by the industry from 1976 to 1980 shows a general expansion. The U. S. pulp and paper industry energy supply/demand situation may be summarized by the following observations:

- Total energy demand has declined about 8% from 1971 to 1978.
- Electricity purchased by the industry has declined dramatically.
- The energy-to-product ratio, and substitution of waste sources for oil and gas has improved.
- The amount of purchased fuel has declined slightly.
- The cost of fuel has increased dramatically.

Of these, the slight decline in amount of fuel purchased and the dramatic increase in the cost of that fuel are the two driving forces that emerge in planning for the future.

III. ANALYSIS OF THE POSSIBLE UTILIZATION OF GEOTHERMAL ENERGY IN PULP AND PAPER MILLS

Process Designs. The manufacturing process designs for a typical nongeothermal mill, for a typical mill retrofitted for geothermal use, and for a new mill specifically designed to use geothermal resources, will be reviewed in this section. The economics of the latter two operations, using geothermal resources, will also be described. An actual plant at Kawerau, New Zealand, will be briefly described. Finally, the question of matching the locations of geothermal resources to plants will be addressed.

The use of the so-called "geopressure"* geothermal energy in the pulp and paper making business was investigated in detail by DSS Engineers, Inc.[1] DSS investigated a typical 1000-ton-per-day bleached Kraft process paper plant. They explained, first of all, the process for a typical mill, then modifications to that mill that might make use of geopressure geothermal energy. Finally, they proposed a plan for a new plant that would take full advantage of this resource. Heat balances were developed to show energy savings; and process diagrams were presented to explain the way in which energy would be used in these operations.

The typical plant studied required a gross energy input of approximately 12 trillion BTUs per year. This energy is normally supplied from 600,000 barrels of fuel oil, 220,000 tons of bark, and black liquor from the pulping operations themselves. As with other large heat-intensive

---

*Geopressure geothermal resources occur in the Gulf Coast of the United States, for example. They are relatively hot, methane-laden, and are characterized by fluid pressures substantially above hydrostatic.

processing plants, boiler steam is produced by waste products wherever possible. Part of the primary boiler steam passes through a steam turbo-generator to provide in-house electricity. Its discharge as well as supplemental low-pressure steam from still other boilers is used in the pulping and paper making processes.

The retrofit plant--in particular one retrofitted for the use of the geopressure geothermal resource--called for the addition of a flash vessel, the addition of new wash water heaters, and certain jet compressors to bring steam up to required pressures. These modifications are shown in Figure 1. They made possible the use of geothermal energy resulting in a reduction by about 15 percent of use of purchased electricity and purchased fuel. Proposed geothermal substitution saved about 400,000 barrels of oil per year. In addition, the hydraulic energy from the geopressured resource was designed to turn a hydraulic turbogenerator, which could provide an appreciable amount of electricity. However, owing to changes elsewhere in the plant, it was necessary to buy additional electricity to service all electrical needs of the plant. The process flow diagram for this retrofit scheme is shown in Figure 1.

A new plant, which has been designed specifically to take full advantage of the geopressured resource, has a design similar to a typical mill. However, through more extensive use of the geopressure geothermal resource, the gross energy needed from purchased fuel and electricity is reduced about 30 percent, which results in a savings of over 600,000 barrels of fuel oil per year, and a savings in bark

burned of about 85,000 tons per year. Figure 2 shows the process diagram of the proposed new plant design.

Tasman Pulp and Paper Company Operations at Kawerau, New Zealand. New Zealand has a working example of a geothermal-fired pulp and paper plant. This plant, which is operated by the Tasman Pulp and Paper Co., has been in operation since 1971 and is located in Kamerau, New Zealand. It produces about 345,000 long tons of newsprint per year, 160,000 long tons Kraft pulp, and 80 x 10^6 board feet of timber. It has a process steam demand of 820,000 lb/hr, one-third of which is supplied by geothermal resources.* The geothermal resource itself is characterized by downhole temperatures of 285°C average, capable of providing saturated steam at pressures of 120 lb per square inch. Geothermal energy is used in a variety of these plant processes: log-handling equipment, recovery boilers, shatter sprays, liquor heaters, timber dryers, and also in the generation of electricity for in-plant use. The total cost of tapping the geothermal resource, including wells, lines, and other equipment, was about $5 million in 1971. Savings realized annually as a result of this use are approximately 70 percent of ordinary yearly purchased fuel costs. These savings amounted to $3.2 million in 1971. It is clear that the Tasman Pulp and Paper Mill operation is attractive technically as well as economically.

Economics of Utilization. The economics of geothermal utilization are of considerable interest. In order to make a reasonable basis

---

* So-called "hydrothermal" geothermal resources are involved; not the "geopressure" geothermal resource.

for economic comparison in the specific case of the geopressure geothermal resource, DSS Engineers, Inc. compared the three plants they described.[1] Comparison was based on determination of a unit value, in terms of cents per barrel, of the geothermal fluid used. This value is an amount of money envisioned to be creditable by the operating plant to the energy supply system for the use of the geothermal fluid.

The unit value was determined by calculating the annual savings in fuel costs realized by using the fluid, then subtracting from these savings the annual operating costs, including amortization, for additional equipment required for use of the geothermal resource. Also, it is necessary to subtract the costs for additional purchase of electricity, as compared with a typical nongeothermal plant. Finally, these differences are divided by the total barrels per year of geothermal fluid required to service the plant. Details of the calculation are provided in the DSS report.[1]

The cost of a barrel of geothermal fluid may be calculated as the sum of the costs of fluid supply and disposal systems less a credit--in the case for geopressure resources--for dissolved methane, and for electricity generated hydraulically divided by the number of barrels of fluid anticipated to be produced over the lifetime of these systems.

Net return in cents per barrel (namely, the difference between unit costs and unit value) ranges from 4.08¢ to 4.16¢. Folding these net returns into the total financial picture, it can be shown that the overall rate of return for the use of the geopressure geothermal resource, when compared on a fuel-savings basis, is about 25 percent.

Matching Plant Sites and the Location of Geothermal Resources. The issue of matching locations of geothermal resources to plant sites is a very important one. Data are scarce and this topic is one where cooperation between industry and government should work to mutual advantage, particularly the review of land holdings for the possibility of suitable geothermal resources.

One element in matching is the location of existing pulp and paper mills. In this regard, Lockwood's annual directory is an obviously excellent source of this information.

Geothermal resource locations are not, however, as well identified. Nevertheless various studies have been conducted leading to identification of so-called "KGRA's"--or "Known Geothermal Resource Areas." Further studies about these areas, as well as other resource possibilities throughout the country, are currently being carried out by both the U. S. Geological Survey and the Department of Energy.

When the location of plants and identification of geothermal resources have been made, and when a colocation appears to exist, a site-specific study is necessary to arrange a proper marriage of resource and plant. Typical questions then are as follows:

- Is a geothermal resource within a reasonable distance of the plant?
- On the average, how hot is the resource?
- How much energy can the resource supply to the plant, and for how long?
- How might this energy be used specifically in the plant?

- Are the economics favorable?
- Are all activities, including heat transportation and disposal environmentally acceptable?

Favorable answers to these questions provide the capstone for using geothermal resources. And it would be worth repeating that in some circumstances--such as at Kawerau, New Zealand--the answer to all of these questions is favorable. A geothermal resource has been successfully used to satisfy a significant part of the energy demands of a pulp and paper mill. The prospects of additional examples of this kind appear reasonable. They will only be realized in the United States, however, if a conscientious effort is made--particularly by the pulp and paper industry--to see that it happens.

REFERENCES

1. DSS Engineers, Inc., 1975. Geothermal resource utilization: Paper and cane sugar industries. Lawrence Livermore Laboratory, UCRL-13633, in satisfaction of Contract No. 2-7405 Eng. 48, 11 chapters, 4 appendices, Livermore, California. (This report is available through the National Technical Information Service, Springfield, VA 22151.)
2. Wilson, R. D. Use of geothermal energy at Tasman Pulp and Paper Company Limited, New Zealand: Multipurpose use of geothermal energy. Proceedings of the International Conference on Geothermal Energy for Industrial, Agricultural, and Commercial-Residential Uses. Oregon Institute of Technology, Klamath Falls, Oregon, 7-9 October 1974 (pp. 79-100).

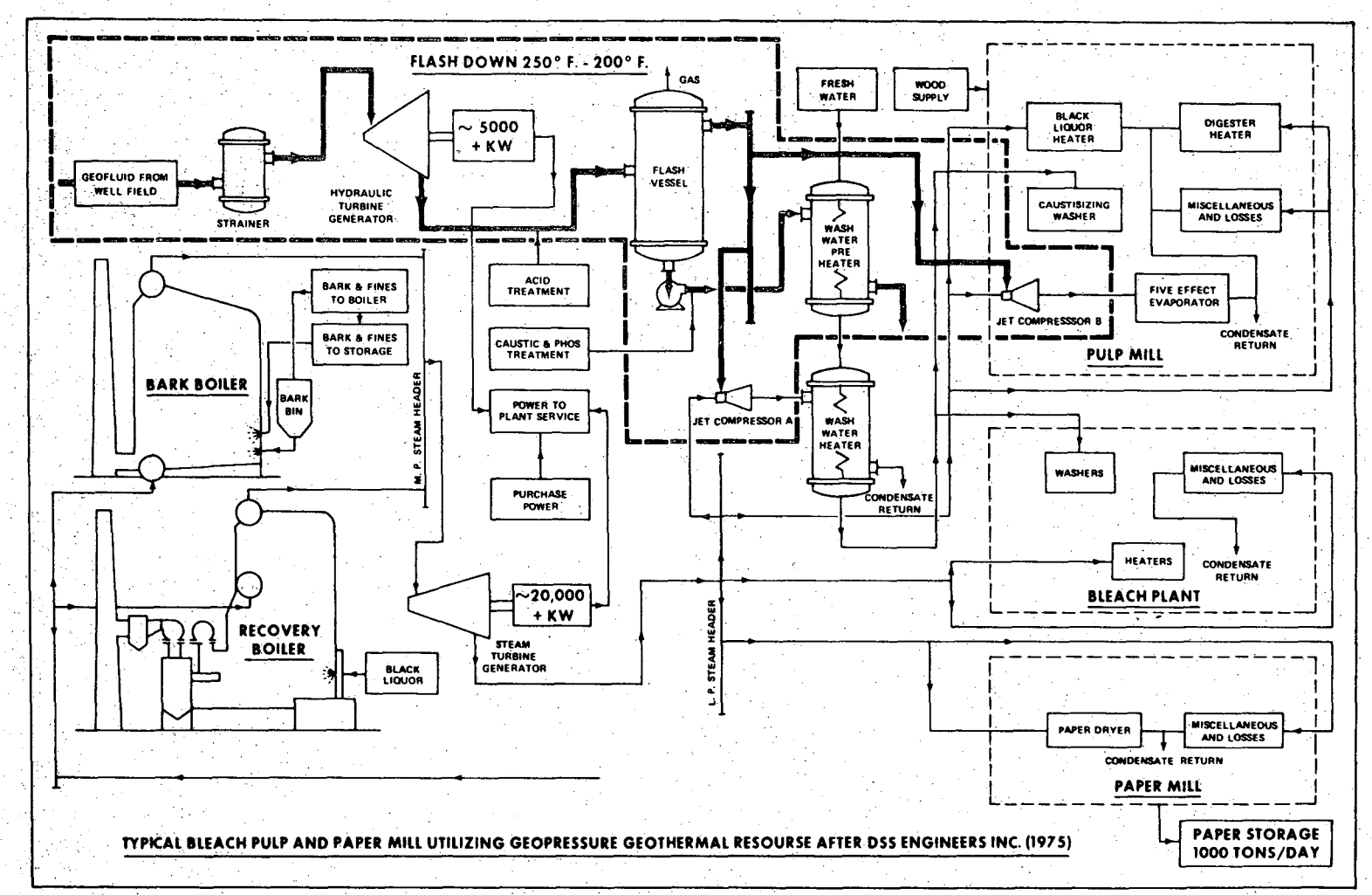

TYPICAL BLEACH PULP AND PAPER MILL UTILIZING GEOPRESSURE GEOTHERMAL RESOURSE AFTER DSS ENGINEERS INC. (1975)

XBL 795-1562

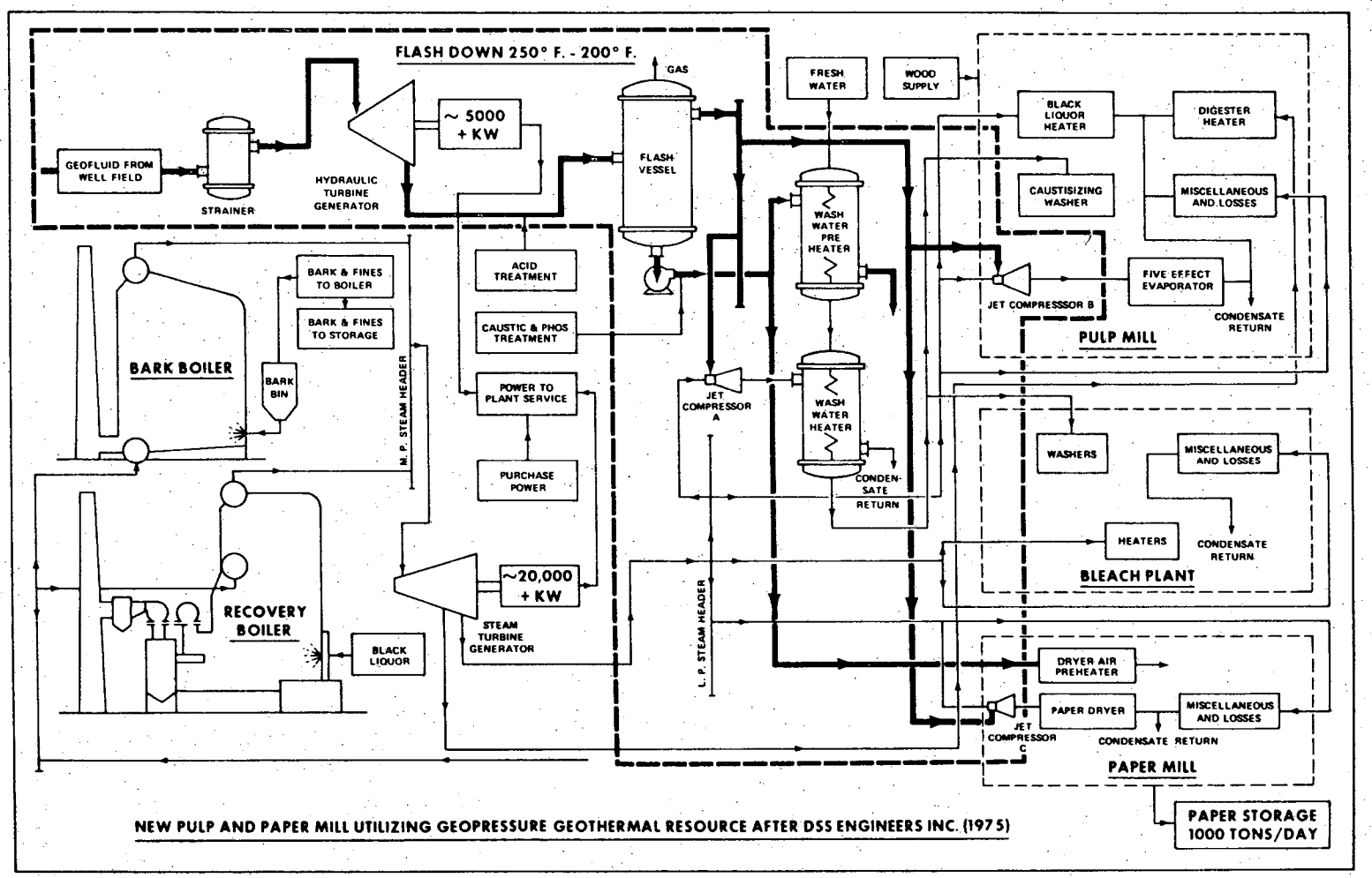

NEW PULP AND PAPER MILL UTILIZING GEOPRESSURE GEOTHERMAL RESOURCE AFTER DSS ENGINEERS INC. (1975)

XBL 795-1563

This report was done with support from the Department of Energy. Any conclusions or opinions expressed in this report represent solely those of the author(s) and not necessarily those of The Regents of the University of California, the Lawrence Berkeley Laboratory or the Department of Energy.

Reference to a company or product name does not imply approval or recommendation of the product by the University of California or the U.S. Department of Energy to the exclusion of others that may be suitable.

TECHNICAL INFORMATION DEPARTMENT
LAWRENCE BERKELEY LABORATORY
UNIVERSITY OF CALIFORNIA
BERKELEY, CALIFORNIA 94720