Presented at the EPA Oil Shale Sampling, Analysis and Quality Assurance Symposium, Denver, CO, March 26-28, 1979.

LBL-8827 c.2

RECEIVED
LAWRENCE
BERKELEY LABORATORY

JUN 28 1979

LIBRARY AND
DOCUMENTS SECTION

TWO-WEEK LOAN COPY

This is a Library Circulating Copy which may be borrowed for two weeks. For a personal retention copy, call Tech. Info. Division, Ext. 6782

Energy and Environment Division

A Continuous Flow Bioassay Technique for Assessing the Toxicity of Oil-Shale-Related Effluents: Preliminary Results With Two Species of Caddisfly Larvae

Peter P. Russell, Vincent H. Resh, and Thomas S. Flynn

March 1979

Lawrence Berkeley Laboratory University of California/Berkeley

Prepared for the U.S. Department of Energy under Contract No. W-7405-ENG-48

LBL-8827 c.2

DISCLAIMER

This document was prepared as an account of work sponsored by the United States Government. While this document is believed to contain correct information, neither the United States Government nor any agency thereof, nor the Regents of the University of California, nor any of their employees, makes any warranty, express or implied, or assumes any legal responsibility for the accuracy, completeness, or usefulness of any information, apparatus, product, or process disclosed, or represents that its use would not infringe privately owned rights. Reference herein to any specific commercial product, process, or service by its trade name, trademark, manufacturer, or otherwise, does not necessarily constitute or imply its endorsement, recommendation, or favoring by the United States Government or any agency thereof, or the Regents of the University of California. The views and opinions of authors expressed herein do not necessarily state or reflect those of the United States Government or any agency thereof or the Regents of the University of California.

A CONTINUOUS FLOW BIOASSAY TECHNIQUE FOR ASSESSING THE TOXICITY OF OIL-SHALE-RELATED EFFLUENTS: PRELIMINARY RESULTS WITH TWO SPECIES OF CADDISFLY LARVAE

Peter P. Russell
Lawrence Berkeley Laboratory
University of California
Berkeley, California 94720

Vincent H. Resh and Thomas S. Flynn
Division of Entomology and Parasitology
University of California
Berkeley, California 94720

INTRODUCTION

The following report describes research results of a study to develop preliminary methods for determining the response of selected species of aquatic insects to an effluent associated with activities of the oil shale industry.

The wastewater considered is a by-product of in situ retorting of oil shale deposits and includes water of hydration, combustion water and intruding ground water. These waters typically contain organic compounds in concentrations of up to 2% and inorganics to 5%, depending on the processing parameters and the extent of groundwater intrusion. The principal inorganic components of the wastewater are ammonium, sodium and bicarbonate with lesser but significant amounts of thiosulfate, chloride, sulfate and carbonate.

Large-scale commercial shale oil production has yet to take place. However, the effect on aquatic insects of wastewaters from conventional petroleum production may give an indication of the responses that would result from oil shale processing effluents. The impact of crude oil on natural communities of benthic macroinvertebrates has been studied by Rosenberg and Weins[1] and Vascotto,[2] of heavy bunker oil by McCauley,[3] and of oil field brines by Mathis and Dorris.[4] Larval insect populations occurring in oil refinery effluent holding ponds were reported by Tubb and Dorris.[5] Although the responses were markedly species specific, in general Diptera were the most tolerant of petroleum pollution while Trichoptera, Ephemeroptera and Plecoptera were the most sensitive.

The potential for use of stream macroinvertebrates as water quality indicators stems from their relative ease of collection, wide range of tolerance to pollution, inability to leave a polluted area rapidly, and often ready adaptability to laboratory study.[6] The caddisflies (Insecta: Trichoptera) in particular are frequently used as indicator organisms for

freshwater lotic habitats because of their nearly ubiquitous occurrence, their frequent dominance in both diversity and abundance, and the narrow pollution tolerances of many species.[7,8]

Apparati to simulate the lotic milieu of caddisfly larvae have been designed and successfully employed without resorting to elaborate or expensive support systems.[9-13] Many utilize flumes with or without water recirculation but simpler designs involving small, agitated basins are also effective. The most important considerations pertaining are water circulation, maintenance of a high dissolved oxygen concentration, and prevention of temperature extremes.

Two experimental runs were performed in which caddisfly larvae were exposed to various dilutions of oil-shale-related wastewaters in a model stream setting. Another run used a synthetic wastewater compounded from ammonium carbonate. In addition, one run tested the effect of the experimental apparatus, with no wastewater load, on the caddisfly larvae. The activity of the larvae was observed in terms of its motility, prepupation behavior and timing, and the abandonment of larval cases.

METHODS

Two species were used in the bioassays, Dicosmoecus gilvipes (Hagen) (Trichoptera: Limnephilidae) and Gumaga nigricula (McLaughlin) (Trichoptera: Sericostomatidae). The test organisms were collected from Big Sulfur Creek at The Geysers, Sonoma County, California. Last instar Gumaga and late instar Dicosmoecus were used.

The laboratory bioassays were conducted in four mutually isolated, parallel model streams. Figure 1 shows a schematic of the bioassay apparatus and support system with one stream illustrated. Each stream consisted of a riffle reach 120 cm long bounded by a pool at each end. The upstream and downstream pools were 17 cm and 27.5 cm long, respectively. The width of the riffles and pools was 9.5 cm, yielding a total volume of 12 liters per stream. Flow was produced in the streams by pumping water from the lower pools to the respective upper pools. Temperature control was effected by means of a cooling coil in the lower pool of each stream. An array of fluorescent tubes suspended over the riffles provided illumination. Although well lit, no lights were situated directly over the pools. Chemical constancy of the stream waters was maintained by metering make-up water to the streams on a continuous basis. The make-up water source was Berkeley (East Bay Municipal Utilities District) tap water, dechlorinated by passage through a column of activated carbon. Since concurrent aufwuchs bioassays were being conducted in the riffle reaches of the model streams, nutrient salts were added to the make-up water to promote primary productivity. The millimolar (mM) concentrations of the salts in the tap water and of the salts added are given on Table 1. The resulting concentrations are similar to those suggested by Guillard with reduced nitrate content and neither vitamin nor buffer addition.[14] In addition, the wastewater load indicated for each stream by the design of each experimental run was fed with the make-up water. The metered make-up water displaced an equal volume of stream water to waste which left the system via overflow ports in stilling wells

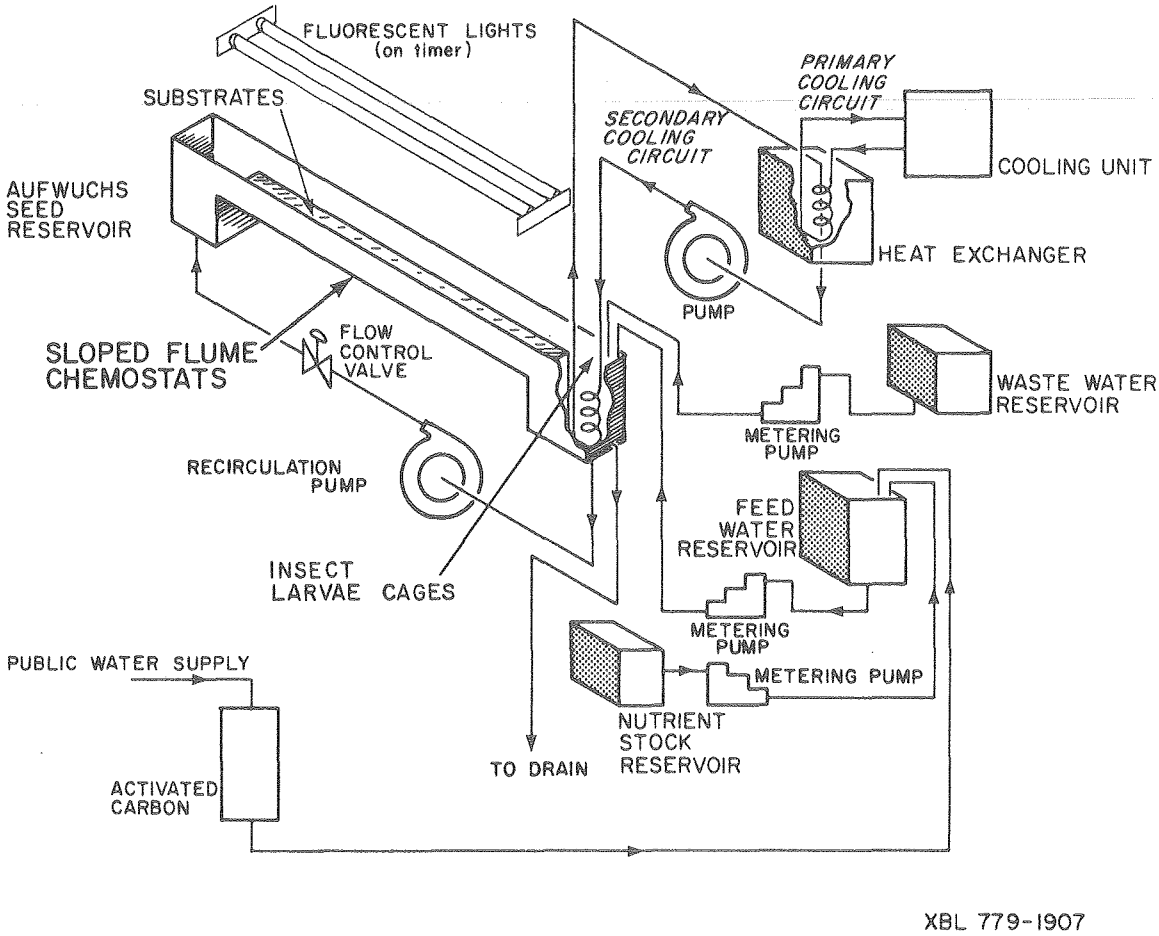

Figure 1. Model Stream Schematic.

Table 1. IONIC COMPOSITION OF MODEL STREAM MAKE-UP WATER; ALL VALUES IN mM, T=TRACE.

CONSTITUENTS	MILLIMOLAR CONCENTRATION		
	In Tap[b]	Added	Total
Ca^{+2}	0.45	0	0.45
Mg^{+2} (as $MgSO_4 \cdot 7H_2O$)[a]	0.123	0.027	0.150
HCO_3^{-1}	0.865	0	0.865
PO_4^{-3} (as H_3PO_4)[a]	0.0002	0.0485	0.0487
NO_3^{-1} (as $NaNO_3$)[a]	0.0015	0.0986	0.1001
SiO_2	0.120	0	0.120
K^{+1} (as KCl)[a]	0.015	0.064	0.079
EDTA (as Na_2EDTA)[a]	–[d]	0.01	0.01
Fe^{+3} (as $FeCl_3 \cdot 6H_2O$)[a]	0.002	0.010	0.012
Cu^{+2} (as $CuSO_4 \cdot 7H_2O$)[a]	–[d]	<0.01	T
Zn^{+2} (as $ZnSO_4 \cdot 7H_2O$)[a]	<0.01	<0.01	T
Co^{+2} (as $CoCl_2 \cdot 6H_2O$)[a]	<0.0001	<0.0001	T
Mn^{+2} (as $MnCl_2 \cdot 4H_2O$)[a]	0.0003	0.0006	0.0009
Mo^{+3} (as $Na_2MoO_4 \cdot 2H_2O$)[a]	<0.01	<0.01	T
Na^{+1} [c]	0.3045	0.1246	0.4291
Cl^{-1} [c]	0.169	0.096	0.265
SO_4^{-2} [c]	0.16	0.03	0.19

[a] compound was used to supply the ion.
[b] typical values for East Bay Municipal Utilities District, average of analyses for December 1976.
[c] source from several compounds listed above.
[d] not reported.

connected to each stream. The rate of make-up water feed was adjusted to deliver six stream volumes per day for a mean residence time of four hours.

Ammonia levels in the model stream water were measured by the phenol-hypochlorite method.[15] Aside from hydrogen sulfide, which was probably absent from the well aerated stream waters, this colorimetric technique is quite insensitive to interfering substances as well as other nitrogenous compounds. Interference from color-producing compounds in the wastewater was probably negligible because of the high dilutions employed.

The test larvae were confined in cages of PVC screen located in the lower pool of each stream. A minimum of 16 cm^3 (1 $in.^3$) was provided for each individual. In addition to PVC, other materials in contact with the stream water were teflon, nylon, white epoxy paint, polyethylene, plexiglass and steel.

The effluent dilutions in each stream for the four experimental runs are presented on Table 2 along with the mean temperature, pH, and ammonia concentrations. For each run, a one way analysis of variance was performed on the temperature and pH values summarized on Table 2. Stream number was used as the independent variable in the analyses. The variations in temperature were not significantly influenced by stream number in any of the runs. The measured pH values, however, did vary significantly ($p < 0.015$) with stream number in each run except Run 2, when it was not significantly different between streams. The stream dependence of the measured pH values is primarily a reflection of the salts in the effluents and of the impact of the primary productivity in each of the streams on the carbonate buffer system. The streams' pH values for each run were compared using Scheffé's test, at the 0.05 level of significance, as implemented by the system of computer programs from the Statistical Package for the Social Sciences.[16] The streams in each run whose pH values were not different from each other at this level of significance are joined by the vertical bars on Table 2.

Run 1, 1/7/78 to 1/19/78, was a demonstration of the viability of *Gumaga nigricula* larvae in the model streams with no wastewater addition. The duration of Run 1 was 12 days. Each of the other three runs lasted nine days. The test specimens were collected on 1/4/78 and within six hours were transported to the laboratory where they were introduced to an aerated basin of model stream water. The stock basin was maintained near the temperature of the model streams. Larval mortality in the stock basin prior to the beginning of each run was negligible. The test larvae were randomly distributed to the cages in the lower pool of each stream.

The wastewater examined in Run 2 was a water sample obtained from the US Department of Energy/Laramie Energy Technology Center as produced during the Rock Springs Site 9 experimental in situ oil shale processing project near Rock Springs, Wyoming.[17] This effluent, called Omega-9 water, was filtered to effect a nominal 0.4 μm exclusion of suspended matter prior to its distribution to research laboratories. A description of the filtered Omega-9 water in terms of its water quality parameters is given on Table 3. Although the Omega-9 water sample was probably the best in situ retort water currently available, it is not necessarily representative of waters

Table 2: PHYSICAL/CHEMICAL MEASUREMENTS ON THE MODEL STREAMS FOR THE FOUR EXPERIMENTAL RUNS. TEMPERATURES AND pH VALUES ARE MEANS OF DAILY IN SITU MEASUREMENTS TAKEN IN RIFFLE REACHES. THE VERTICAL BARS TO THE RIGHT OF THE pH COLUMN CONNECT STREAMS WHOSE pH VALUES ARE NOT SIGNIFICANTLY DIFFERENT AT THE 0.05 LEVEL AS MEASURED BY SCHEFFÉ'S TEST. MEASURED AMMONIA VALUES ARE MEANS OF TRIPLICATE SAMPLES TAKEN ON THE LAST DAY OF EACH RUN. NO AMMONIA MEASUREMENTS WERE TAKEN FOR RUN 1.

Run No.	Effluent	Dilution	Stream No.	Temperature (C) Mean (Range)	pH Mean (Range)	Ammonia (mM) Calc.	Ammonia (mM) Meas.
1	NONE	0	1	24.3 (23.7 - 25.1)	8.8 (8.6 - 9.0)	0	-
		0	2	24.4 (23.9 - 25.3)	9.1 (8.9 - 9.4)	0	-
		0	3	24.6 (24.0 - 25.3)	9.0 (8.7 - 9.3)	0	-
		0	4	24.5 (24.0 - 25.3)	9.1 (8.9 - 9.3)	0	-
2	FILTERED OMEGA-9 WATER	0	4	21.7 (20.8 - 22.9)	7.9 (7.0 - 8.5)	0	0
		0.27%	3	21.8 (20.8 - 23.3)	8.1 (7.6 - 8.4)	0.59	0.44
		1.06%	2	22.0 (21.0 - 23.3)	8.2 (7.7 - 8.5)	2.36	2.02
		2.12%	1	21.7 (20.7 - 23.0)	8.3 (7.8 - 8.4)	4.73	4.22
3	UNFILTERED OMEGA-9 WATER	0	1	24.0 (22.9 - 24.9)	8.6 (7.7 - 8.9)	0	0
		0.27%	3	24.4 (23.4 - 25.1)	7.6 (6.7 - 8.2)	0.59	0.08
		0.53%	2	24.4 (23.2 - 25.1)	7.6 (7.0 - 8.1)	1.18	0.47
		1.06%	4	24.5 (23.4 - 25.2)	8.2 (8.0 - 8.3)	2.36	2.37
4	AMMONIUM CARBONATE	0	3	23.3 (22.3 - 24.2)	8.5 (7.5 - 9.1)	0	0
		0.56 mM NH_3	4	23.7 (22.7 - 24.6)	7.1 (6.9 - 7.3)	0.56	0.04
		2.26 mM NH_3	1	23.2 (22.1 - 24.1)	6.9 (6.0 - 8.1)	2.26	0.51
		4.52 mM NH_3	2	23.4 (22.4 - 24.3)	7.2 (6.4 - 8.4)	4.52	1.25

Table 3. WATER QUALITY CHARACTERIZATION OF OMEGA-9 WATER[a]

Alkalinity (as $CaCO_3$)	16,200 ± 480
Biochemical Oxygen Demand, 5-day	740
Carbon, Bicarbonate (as HCO_3^-)	15,940
Carbon, Carbonate (as $CO_3^=$)	500
Carbon, Inorganic (as C)	3340 ± 390
Carbon, Organic (as C)	1003 ± 192
Chemical Oxygen Demand	8100 ± 5700
Conductivity (μmho/cm)	20,400 ± 3840
Cyanide (as CN^-)	0.42 ± 2.9
Hardness, Total (as $CaCO_3$)	110
Nitrogen, Ammonia[b] (as NH_3)	3795 ± 390
Nitrogen, Ammonium (as NH_4^+)	3470 ± 830
Nitrogen, Kjeldahl (as N)	3420 ± 420
Nitrogen, Nitrate (as NO_3^-)	0.17
Nitrogen, Organic (as N)	148 - 630
Oil and Grease	580
pH	8.65 ± 0.26
Phenols	60 ± 30
Phosphorus, Orthophosphate (as $PO_4^{\equiv}$)	0.08 - 24.6
Solids, Fixed (550 C)	13,430 ± 415
Solids, Total (103-105 C)	14,210 ± 120
Solids, Total Dissolved	14,210 ± 193
Sulfur, Sulfate (as $SO_4^=$)	1990 ± 250
Sulfur, Sulfide (as S)	0.0
Sulfur, Sulfite (as S)	<20
Sulfur, Tetrathionate (as $S_4O_6^=$)	280
Sulfur, Thiosulfate (as $S_2O_3^=$)	2740 ± 730
Sulfur, Thiocyanate (as SCN^-)	123 ± 18

[a]All values are mg/l unless otherwise noted.[18]

[b]This is the sum of NH_3 and NH_4^+.

which may be produced during full-scale commercial in situ oil shale processing. Consequently the results are strictly applicable to this water only. The stream water effluent concentrations tested in Run 2 were 2.12%, 1.06% and 0.27% as well as a control stream with no Omega-9 water loading. In Run 2, 2/13/78 to 2/22/78, Gumaga nigricula larvae collected from Big Sulfur Creek on 2/12/78 were used. Transportation to the laboratory was the same as with the 1/4/78 collection. Unlike the earlier run, allochthonous leaf matter from the collection site was included in the larvae cages of each stream.

On 3/13/78 Gumaga nigricula larvae for Run 3, 3/15/78 to 3/24/78, were collected and transported to the laboratory as in the previous runs. Allochthonous stream leaf matter was collected for introduction to the insect cages in the model streams. Unfiltered Omega-9 water was used for Run 3. The concentrations used were 1.06%, 0.53%, 0.27% and 0%.

Run 4 was designed to determine the effect of ammonium carbonate, potentially a biologically critical component of untreated oil-shale-related effluents, on two species of caddisfly larvae. Gumaga nigricula and Dicosmoecus gilvipes larvae were collected on 4/21/78 from Big Sulfur Creek along with a supply of allochthonous leaf matter for the run, 4/22/78 to 5/1/78. The ammonium carbonate concentrations tested were 4.52 mM, 2.26 mM, 0.56 mM plus a control receiving no salt.

A period of at least one week was allowed to elapse between runs during which the streams were flushed with make-up water containing no wastewater. After each run the riffles and PVC insect cages of each stream were scrubbed to remove any aufwuchs accumulation. The stream chosen as the control was changed for each run.

RESULTS

Table 4 details the response of the caddisfly larvae for each of the three runs in which wastewater was applied. The disposition of the initial number of larvae in each stream is partitioned between the categories "active," "prepupae," "pupae," "dead or moribund" and "missing." To warrant "active" status a larva must extend its legs behond the case and crawl around. This criterion was usually easily observed as the species studied were quite motile in the stream cages. In some instances larvae had turned around in their cases or begun pupating by sealing one end of their cases and/or attaching their cases to the cage or the allochthonous leaf matter with silk threads. These larvae were designated "active" as long as extended moving legs were visible. All larvae not active for longer than a day were removed from the stream and preserved. At the end of each of the last three runs all larvae were preserved for postmortem examination when the inactive individuals were determined to be "prepupae" (in the sense of Wiggins),[19] "pupae" or "dead or moribund." Also designated "dead or moribund" were larvae which abandoned their cases whether still motile or not. The decision to classify these larvae as dead stems from the assumption that the decased condition would be fatal within a short period of time. "Missing" larvae were noted in Run 4 only.

Table 4. INSECT LARVAE BIOASSAY RESULTS

		INITIAL NO.	ACTIVE	PREPUPAE	PUPAE	DEAD OR MORIBUND	MISSING
RUN 2							
Gumaga nigricula	0%	17	16	0	1	0	0
	0.27%	15	15	0	0	0	0
Filtered Omega-9	1.06%	15	14	1	0	0	0
Water	2.12%	16	14	2	0	0	0
RUN 3							
Gumaga nigricula	0%	18	13	2	2	1	0
	0.27%	14	9	2	3	0	0
Unfiltered	0.53%	18	12	3	2	1	0
Omega-9 Water	1.06%	18	13	2	0	3	0
RUN 4							
Gumaga nigricula	0 mM	9	5	2	1	0	1
	0.56 mM	11	8	3	0	0	0
Ammonium	2.26 mM	10	5	3	1	1	0
Carbonate	4.52 mM	9	4	3	1	1	0
RUN 4							
Dicosmoecus gilvipes	0 mM	10	9	0	0	0	1
	0.56 mM	9	8	0	0	1	0
Ammonium	2.26 mM	9	2	0	0	3	4
Carbonate	4.52 mM	10	4	0	0	4	2

The results of Run 1 are not shown on Table 4 because only one inactive specimen occurred over the course of the 12 days. Of the ten Gumaga nigricula larvae in each stream at the beginning of this run, one larva from stream number 1 sealed the ends of its case and attached itself to the PVC screen cage as though entering pupation. The specimen was unfortunately not preserved to later determine if the pupation process had begun. This larva became inactive on the fourth day of the run. On the seventh day of Run 1, one larva in stream number 2 became inactive and sealed the ends of its case but by the next day it had unsealed the case and begun crawling around again. It remained active through the end of the run.

DISCUSSION

The survival and activity data for two species of caddisflies determined from Runs 1-4 provide an example of the potential information that can be obtained from bioassay analysis to assess the environmental effects of oil-shale-related effluents. As discussed below, these results are intended as a demonstration of this bioassay technique. Undoubtedly, if this approach is expanded or modified to answer specific biological questions regarding the effects of particular effluents, a useful and additional dimension to water monitoring programs associated with the development of the oil shale industry will be provided.

Run 1 demonstrates that Gumaga nigricula larvae remain "active" under model stream conditions for at least 12 days. Since the duration of the subsequent runs was only nine days each, it is expected that the larvae could adequately accommodate any stream-induced stress for that period of time. The survival of Gumaga nigricula as larvae in the control streams in the following three runs was usually not as high as with Run 1. Most Gumaga nigricula larvae remained "active" in the Run 2 control stream (94%); however, in Runs 3 and 4 only 72% and 56%, respectively, were "active" in the control streams for nine days.

Perhaps the elevated temperature of the streams precipitated pupation in the Gumaga nigricula which were obtained from a much cooler environment, 10° C to 12° C. Since specimen collection was never more than three days from the beginning of each of the runs, stress from residence in the stock basin was not likely to be responsible for the inactivity. Probably the condition of the larvae in Big Sulfur Creek at the time of collection was the most important factor influencing the number of inactive specimens in the control streams. Although the streams were allowed time to flush out any effluent residual from the previous run before commencing a new run, the possibility exists that some toxic components may have adsorbed to the stream surfaces and been slowly released to the stream waters of the subsequent run. No analyses were performed to assess the significance of this mechanism. It is likely that any chemical carryover was minor because all unscrubbed stream surfaces were covered with a dense mat of aufwuchs that was continually sloughing cells, which were carried to waste via the overflow, and regenerating itself with new cell growth. Thus any toxins concentrating in the aufwuchs would presumably be depleted during the inter-run periods. Given the heavy aufwuchs growth, probably negligible amounts of effluent constituents were adsorbed to the underlying model stream surfaces. It should be

noted that the phenomenon of fewer control stream larvae remaining "active" with each successive run could be attributed either to progressive maturity of the last instar larvae collected from Big Sulfur Creek for each run, or to residual toxicity build-up in the streams. Neither hypothesis can be disproven by the data, but distinct differences in larval responses between the control and test streams can be observed nevertheless.

Dicosmoecus gilvipes were not collected for 12 days of rearing in the model streams as was done for Gumaga nigricula in Run 1. In Run 4, however, 9 of the 10 Dicosmoecus gilvipes larvae initially in the stream were "active" after 9 days. Presumably there were no inherent stresses to the Dicosmoecus gilvipes larvae in the other three streams.

Table 4 shows that with concentrations of up to 2% filtered Omega-9 water, no acute toxic responses were observed during the 9 days of exposure. There was a minor trend for prepupae to form with more than 1% of this effluent in the stream water.

In Run 3 unfiltered Omega-9 water was used as the test effluent. As in Run 2, no appreciable decrease in "active" individuals was observed in the streams receiving effluent as compared with the control stream. At the end of day 4 in Run 3 however, there did appear to be a tendency for the larvae in the streams with the higher Omega-9 water concentrations to become inactive. This distinction disappeared by the conclusion of the run on day 9. In contrast to the filtered Omega-9 water run, dead larvae were found at the higher concentrations of effluent.

The synthetic, ammonium carbonate wastewater used in Run 4 corresponds to the ammonium levels found in streams with up to about 2% Omega-9 water concentration. As in Run 2 with these effluent ammonium concentrations, no pronounced difference was observed in the numbers of active Gumaga nigricula larvae between the test and control streams of Run 4. This result was expected as the ammonium concentrations used in Run 4 duplicated those of Run 2; however, with Run 4 no other oil-shale-related constituents were present. At most the synthetic, ammonium carbonate wastewater would exhibit a toxic response no greater than that of corresponding dilutions of Omega-9 water, unless the other oil shale effluent components are antagonistic toward salt toxicity. As the Omega-9 water dilutions used in Run 2 were apparently too great to elicit demonstrable reductions in Gumaga nigricula activity in 9 days, the ammonium carbonate dilutions of Run 4 similarly proved to be too great.

The Dicosmoecus gilvipes larvae that were exposed to the synthetic ammonium carbonate wastewater along with the Gumaga nigricula in Run 4 showed a clear sensitivity to the higher concentrations. The streams receiving ammonium carbonate to computed stream concentrations of 2.26 mM and 4.52 mM had significantly fewer numbers of "active" Dicosmoecus gilvipes larvae than the streams with 0.56 mM and 0 mM ammonium carbonate dilutions. In the two higher concentration streams, a total of six Dicosmoecus gilvipes larvae were missing over the course of the 9-day run as compared with only one larva in the other two streams. Although the precise fate of the missing larvae is unclear, probably they were either prompted to climb up the cage screening

above the water line and into the lower reservoir of the stream in an avoidance response, or they were cannibalized by other larvae and their cases used as case maintenance material by the remaining active Dicosmoecus gilvipes larvae. Any larvae climbing into the lower reservoir would be sucked into the recirculating pond and macerated. Although probably the missing larvae should properly be considered as demonstrating a toxic response, particularly since only one missing larvae occurred in the control and low concentration streams, the conclusions drawn from Run 4 remain the same regardless of the disposition of the missing larvae.

Note is made that in Runs 3 and 4 the measured ammonia concentrations deviate markedly from the computed concentrations (Table 2). In Run 2 the correspondence was much closer. A definitive explanation for this deviation awaits further investigation. Several hypotheses are evident, however. It is possible that the primary producer organisms of the aufwuchs communities in the streams selectively shifted to those species favoring ammonia as a nitrogen source over nitrate. In each case the ammonia determinations were made at the end of the run when the aufwuchs biomass was the greatest and had the greatest nitrogen uptake. With this eventuality the ammonia concentrations in the streams would be reduced to the degree that this nutrient was removed by the aufwuchs biomass. In Run 2 presumably the aufwuchs communities still preferred to meet their nitrogen requirement with nitrate. The reason for any inorganic nitrogen uptake shift by the primary producers is not clear since 1.4 mg/l of nitrate nitrogen was always provided in the make-up water (Table 1). Both ammonia and nitrate are readily utilizable nitrogen sources for most species of algae and both were present in excess of algal requirements in the streams receiving effluent additions. A more probable explanation for the discrepancy between computed and measured ammonia concentrations is nitrification of the ammonia to nitrite and then nitrate by nitrifying bacteria whose growth was favored by the high ammonia levels in the streams. Neither nitrite nor nitrate is measured in the hypochlorite test for ammonia. This hypothesis would adequately account for the increased divergence of the calculated ammonia concentrations from the measured values in each successive run if the nitrifier activity in the stream systems increased with time. It is also possible that the ammonia was evolved as a gas. However, arguments for this mechanism are weakened by the fact that the lower pH of some of the streams in the last two runs should have prevented ammonia evolution and yet, the large deviations between the computed and measured concentration occurred only in the later runs. The accuracy of the phenolhypochlorite method is supported by the close agreement of the standard curves generated from a stock ammonia solution for each run.

Limitations in the design of this study include the following: (1) too few organisms were involved in the bioassays; (2) a finer discrimination of larval activity responses is necessary, since other more subtle sublethal effects of exposure to oil-shale-related effluents are ignored by this classification scheme. In terms of this latter point, it should be noted that the Gumaga nigricula larvae of the highest effluent concentration streams in Runs 2 and 4 were visibly more sluggish than individuals from the other streams. These larvae exposed to the highest effluent concentrations moved around their cages less and appeared to have difficulty keeping balance and maintaining a grip on the cage screening. Another response resisting

description under the current scheme is the phenomenon of case abandonment by the larval caddisflies. Both caddisfly species sometimes left their cases but this occurrence in the Dicosmoecus gilvipes larvae was much more common. A system whereby these responses can be quantitatively measured would be preferable to the preliminary methods that we chose.

An appropriate measure of caution must be used in extrapolating laboratory results of effluent studies to those results that would be obtained in natural habitat conditions. The laboratory conditions include elevated temperature, artificial illumination, inorganic nutrient supplementation of the stream water, and possible exposure to exotic sloughed aufwuchs organisms, all of which may significantly affect the response of the organisms under study. Confirmation of the results obtained here by field bioassays must be obtained prior to drawing firm conclusions as to the effect of these oil-shale-related effluents on aquatic biota.

CONCLUSIONS

1. Gumaga nigricula larvae can be maintained in the laboratory model streams with no effluent loading at nearly 100% survival for at least 12 days.

2. Concentrations of filtered Omega-9 water up to 2.12% and unfiltered Omega-9 water up to 1.06% produce no demonstrable reductions in Gumaga nigricula "activity" after 9 days of exposure in the model streams.

3. Gumaga nigricula "activity" is not notably reduced by rearing in streams receiving up to 4.52 mM concentrations of ammonium carbonate in the make-up water for 9 days.

4. The "activity" of Dicosmoecus gilvipes larvae in the laboratory model streams that were fed ammonium carbonate concentrations of 4.52 mM and 2.26 mM is significantly reduced but not at a dilution of 0.56 mM.

5. Dicosmoecus gilvipes larvae are potentially more sensitive indicators of environmental stress from ammonia-containing effluents than are Gumaga nigricula larvae.

6. This continuous flow bioassay technique has many potential applications in assessing the toxicity of oil-shale-related effluents.

ACKNOWLEDGMENT

This research was supported largely by grants from the Department of Energy's Laramie Energy Technology Center and the U.S. Department of the Interior.

REFERENCES

1. Rosenberg, D. M. and A. P. Wiens. Community and Species Responses of Chironomidae (Diptera) to Contamination of Fresh Waters by Crude Oil and Petroleum Products, with Special Reference to the Trail River, Northwest Territories. J Fish Res Board Can. 33: 1955-1963, 1976.

2. Vascotto, G. L. Zoobenthic Responses to a Controlled Crude Oil Spill in an Arctic Stream. (Presented at the 26th Annual Meeting of the North American Benthological Society. Winnipeg, Canada, May 1978.)

3. McCauley, R. N. The Biological Effects of Oil Pollution in a River. Limnol Oceanogr. 10(4): 475-486, 1966.

4. Mathis, B. J. and T. C. Dorris. Community Structure of Benthic Macroinvertebrates in an Intermittent Stream Receiving Oil Field Brines. Am Midl Nat. 80(2): 428-439, 1968.

5. Tubb, R. A. and T. C. Dorris. Herbivorous Insect Populations in Oil Refinery Effluent Holding Pond Series. Limnol Oceanogr. 10: 121-134, 1965.

6. Goodnight, C. J. The Use of Aquatic Macroinvertebrates as Indicators of Stream Pollution. Trans Amer Microsc Soc. 92(1): 1-13, 1973.

7. Resh, V. H., and J. D. Unzicker. Water Quality Monitoring and Aquatic Organisms: The Importance of Species Identification. J Water Pollut Control Fed. 47(1): 9-19, 1975.

8. Wiggins, G. B. Caddisfly Communities as Indicators. (Presented at the 26th Annual Meeting of the North American Benthological Society. Winnipeg, Canada, May 1978.)

9. Webster, D. A. and P. C. Webster. Influence of Water Current on Case Weight in Larvae of the Caddisfly, Goera calcarata Banks. Can Entomol. 75(6): 105-108, 1943.

10. Craig, D. A. Techniques for Rearing Stream Dwelling Organisms in the Laboratory. Tuatara. 14(2): 65-72, 1966.

11. Mason, W. T., Jr. and P. A. Lewis. Rearing Devices for Stream Insect Larvae. Prog Fish Cult. 32(1): 61-62, 1970.

12. Hildebrand, S. G. The Relation of Drift to Benthos Density and Food Level in an Artificial Stream. Limnol Oceanogr. 19(6): 951-957, 1974.

13. Merritt, R. W., K. W. Cummins, and V. H. Resh. Collecting, Sampling, and Rearing Methods for Aquatic Insects. In: An Introduction to the Aquatic Insects of North America, Merritt, R. W. and Cummins, K. W. (eds.). Dubuque, Kendall/Hunt Publishing Co., 441 pp., 1978.

14. Nichols, H. W. Growth Media - Freshwater. In: Handbook of Phycological Methods, Culture Media and Growth Measurements. Janet R. Stein (ed.). London, Cambridge Univ. Press, 488 pp., 1973.

15. Solórzano. L. Determination of Ammonia in Natural Waters by the Phenolhypochlorite Method. Limnol Oceanogr. 14(5): 799-801, 1969.

16. Kim, J. and F. J. Kohout. Analysis of Variance and Covariance: Subprograms ANOVA and ONEWAY. In: Statistical Package for the Social Sciences, Second Edition, by Nie, N. H., Hull, C. H., Jenkins, J. G., Steinbrenner, K. and Bent, D. H. New York, McGraw-Hill, 1975.

17. Farrier, D. S., R. E. Poulson, Q. D. Skinner, J. C. Adams and J. P. Bower. Acquisition, Processing, and Storage for Environmental Research of Aqueous Effluents Derived from In Situ Oil Shale Processing. In: Proceedings of the Second Pacific Chemical Engineering Congress. 2: 1031-1035, 1977.

18. Fox, J. P., D. S. Farrier and R. E. Poulson. Chemical Characterization and Analytical Considerations for an In-Situ Oil Shale Process Water. LETC/RI-78/7, 47 pp., 1978.

19. Wiggins, G. B. Larvae of the North American Caddisfly Genera. Toronto, Univ. Toronto Press, 401 pp., 1977.

This report was done with support from the Department of Energy. Any conclusions or opinions expressed in this report represent solely those of the author(s) and not necessarily those of The Regents of the University of California, the Lawrence Berkeley Laboratory or the Department of Energy.

Reference to a company or product name does not imply approval or recommendation of the product by the University of California or the U.S. Department of Energy to the exclusion of others that may be suitable.

TECHNICAL INFORMATION DIVISION
LAWRENCE BERKELEY LABORATORY
UNIVERSITY OF CALIFORNIA
BERKELEY, CALIFORNIA 94720