Presented at the EPA Oil Shale Sampling, Analysis and Quality Assurance Symposium, Denver, CO, March 26-28, 1979.

LBL-8888 c.2

RECEIVED
LAWRENCE
BERKELEY LABORATORY

JUN 14 1979

LIBRARY AND
DOCUMENTS SECTION

TWO-WEEK LOAN COPY

This is a Library Circulating Copy
which may be borrowed for two weeks.
For a personal retention copy, call
Tech. Info. Division, Ext. 6782

Energy and Environment Division

Use of Zeeman Atomic Absorption Spectroscopy for the Measurement of Mercury in Oil Shale Gases

D. G. Girvin, T. Hadeishi and J. P. Fox

March 1979

Lawrence Berkeley Laboratory University of California/Berkeley

Prepared for the U.S. Department of Energy under Contract No. W-7405-ENG-48

LBL-8888 c.2

DISCLAIMER

This document was prepared as an account of work sponsored by the United States Government. While this document is believed to contain correct information, neither the United States Government nor any agency thereof, nor the Regents of the University of California, nor any of their employees, makes any warranty, express or implied, or assumes any legal responsibility for the accuracy, completeness, or usefulness of any information, apparatus, product, or process disclosed, or represents that its use would not infringe privately owned rights. Reference herein to any specific commercial product, process, or service by its trade name, trademark, manufacturer, or otherwise, does not necessarily constitute or imply its endorsement, recommendation, or favoring by the United States Government or any agency thereof, or the Regents of the University of California. The views and opinions of authors expressed herein do not necessarily state or reflect those of the United States Government or any agency thereof or the Regents of the University of California.

USE OF ZEEMAN ATOMIC ABSORPTION SPECTROSCOPY FOR THE MEASUREMENT OF MERCURY IN OIL SHALE GASES

D. C. Girvin, T. Hadeishi and J. P. Fox
Lawrence Berkeley Laboratory
Energy and Environment Division
Berkeley, CA 94720

Preliminary investigations of pilot-scale oil shale processing plants[1,2] indicate that the level of mercury in offgasses may be significant. Extrapolation of these results to field conditions suggests that a 100,000 barrel per day oil shale plant processing 100 ℓ/tonne (24 gal./ton) oil shale with an average mercury content of 0.86 ppm [3] may release approximately 32,900 kg of mercury per year to the atmosphere. In contrast, the amount of mercury released from world coal consumption in 1967 is estimated to be 18,900 kg of mercury.[4,5] These data suggest that mercury emissions from oil shale plants may be of future environmental concern and that they may require control technology to reduce mercury levels. This will require reliable techniques to measure the mercury in these gases.

Reliable and representative measurements of mercury in gases from in situ shale plants are difficult to obtain. Fox and others found that the mercury concentration in these gases may vary over several orders of magnitude.[1] Since retort runs may last many months, frequent sampling over a long time period must be employed to obtain representative mercury emission values. Conventional mercury gas stack sampling techniques such as gold bead absorption tubes or impinger trains are limited by interferences when applied to oil shale gases due to the presence of high concentrations of organic and sulfur compounds.

This paper describes a technique to continuously measure total mercury in the offgas from an oil shale plant or other similar plant on a real time basis. This technique utilizes Zeeman atomic absorption spectroscopy (ZAA) for the on-line measurement of mercury in the presence of smoke, organics and oil mist. The theory of Zeeman atomic absorption spectroscopy is presented along with a description of a new instrument suitable for use in field settings where wide temperature fluctuations may occur.

THEORY OF ZAA

Zeeman atomic absorption spectroscopy (ZAA) is an analytical technique similar to conventional atomic absorption spectroscopy (AA).[6-8] It differs principally in that the light source is placed in a magnetic field. This separates the original 2537 Å resonance line into its linearly (π) and

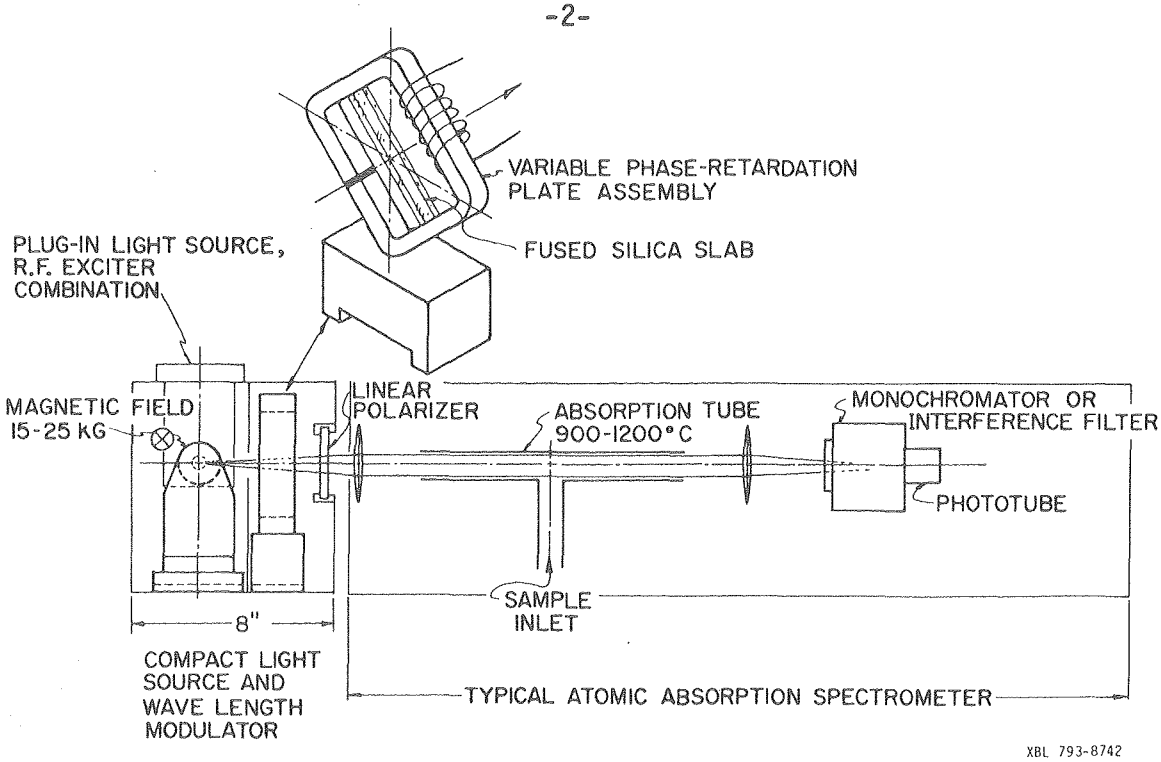

Figure 1. Electro-optical components of a Zeeman atomic absorption spectrometer.[7]

circularly (σ) polarized Zeeman components. The π component is used to detect the presence of mercury and the two σ components are used to monitor smoke and vapor in the light beam. A unique electro-optical switching device distinguishes between the π and σ components. These components are alternatively passed through the sample vapor and the difference in absorption of these two components is used as a measure of the amount of mercury present. Since the spatial and temporal variations in the π and σ components are identical, background correction capabilities are vastly superior to conventional AA techniques. Mercury can be measured in the presence of large quantities of smoke, organic molecules and other interfering substances.

A spectrometer consists of three major components (Fig. 1): a light source which provides a 2537 Å mercury emission line (π) and reference lines (σ) for background correction; a furnace-absorption tube assembly where vapors from thermally decomposed samples are swept into the light path of the emission and reference beams; and a detector which converts changes in the intensity of the transmitted probe and reference beams into an ac voltage for signal processing.

The key to the ZAA technique lies in the mode by which the emission and reference lines are generated and subsequently distinguished from one another. Both the emission and reference lines are supplied simultaneously by a single mercury discharge lamp operated in a 15 kG magnetic field. The Zeeman effect is the splitting of the original 2537 Å emission line, in the presence of a magnetic field, into its three Zeeman components: a σ^- component shifted to

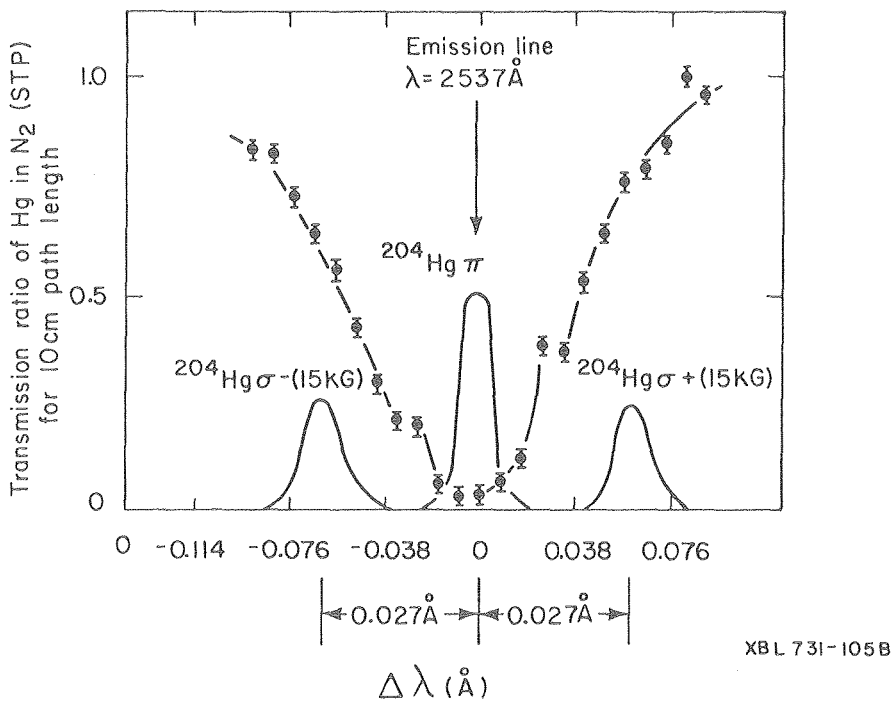

Figure 2. Comparison of the emission lines from a ^{204}Hg discharge lamp in a 15 kG magnetic field with the absorption profile (data points) of natural mercury at 1 atm of N_2.[8]

a longer wavelength, a σ^+ component shifted to a shorter wavelength and an unshifted π component. These Zeeman components for a ^{204}Hg lamp are shown in Fig. 2.

The mercury present in the absorption tube consists of a naturally occurring mixture of several stable isotopes at a pressure of 1 atm. Thus the absorption lines of each isotope are pressure broadened. The resulting total absorption profile due to naturally occurring mercury (at 1 atm of N_2) is superimposed upon the Zeeman-split emission spectrum (Fig. 2). Note that the π component coincides with the peak of the absorption profile for natural mercury, while the σ components are both on the outer edges of the profile. Therefore the difference in absorption of the π and σ components may be used as a measure of the quantity of mercury present in the absorption tube. Here the π component becomes the probe beam and the σ components taken together become the reference beam.

The ZAA technique also provides a means of distinguishing between the π and σ components. When the light source is viewed perpendicular to the applied magnetic field, that is, along the optical axis of the instrument, both σ components are linearly polarized perpendicular to the field, while the π component is linearly polarized parallel to the field (Figs. 1 and 3). Consequently, either component may be viewed independently of the other with a properly aligned linear polarizer.

Alternate selection of the π and σ components for detection before transmission through the absorption region is achieved by using a variable

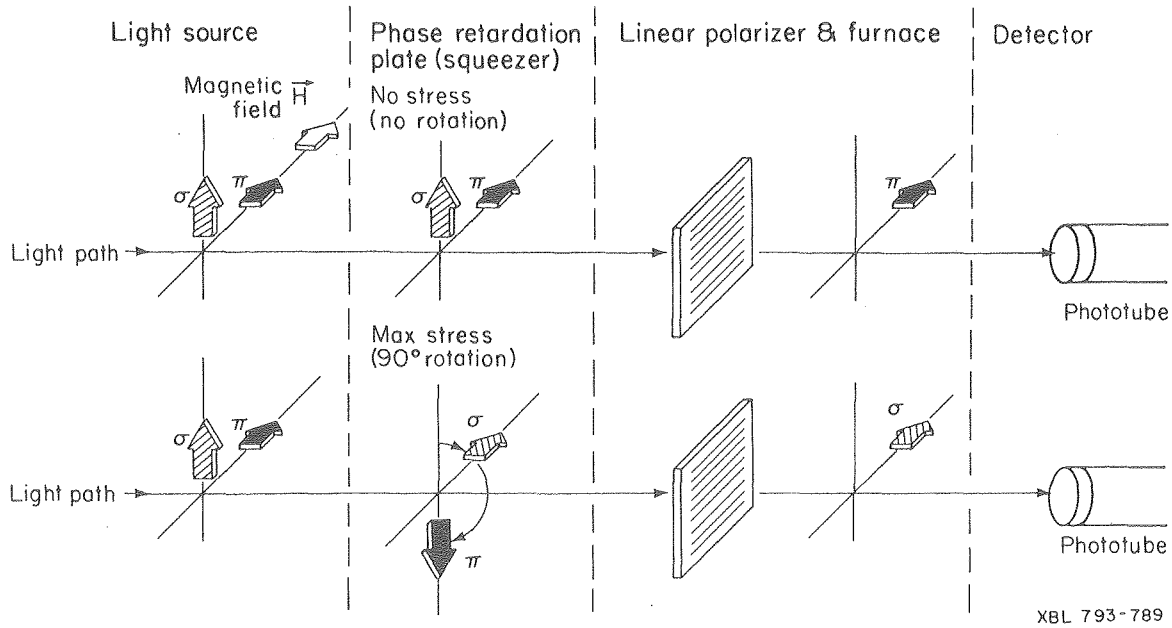

Figure 3. Schematic representation of ZAA depicting π (probe) beam and σ (reference) beam switching.

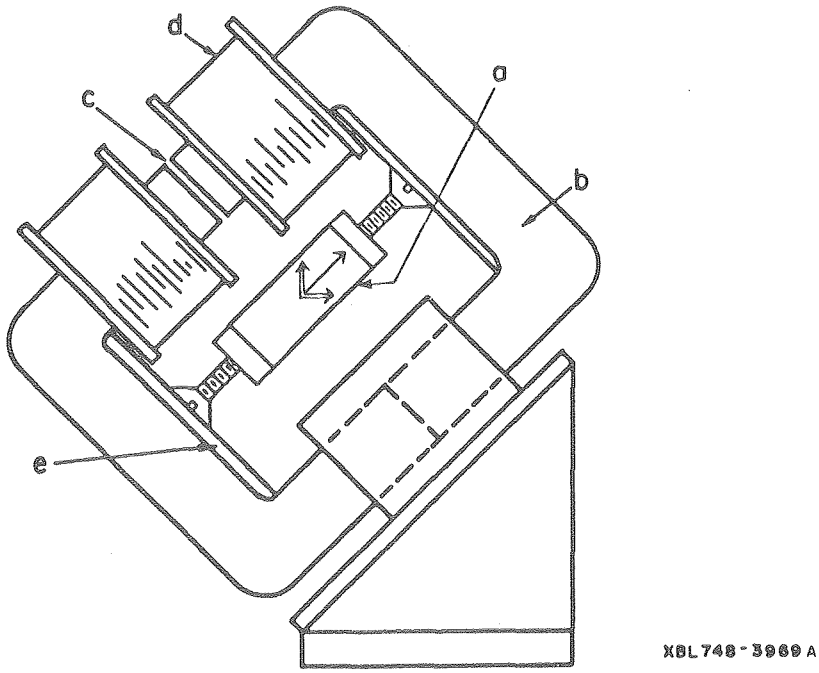

Figure 4. Diagram of the current-controlled variable phase retardation plate. (a) Plate of fused quartz; (b) laminated pulse transformer core; (c) 0.5 mm gap; (d) drive coils; (e) stiffener plates. The long arrow in the center of the quartz represents the stress axis, while the double arrows depict the linear polarization axes of the π and σ beams.[6]

phase retardation plate (VPRP) and a simple linear polarizer (Figs. 1 and 3). The linear polarizer is oriented with its polarization axis parallel to the light source magnetic field (Fig. 3). The VPRP (Fig. 4) is a slab of fused quartz mounted inside a pulse-transformer core which has a driver coil on one side and a 0.5-mm air gap on the other. Varying the current through the driver coil applies a stress to the quartz plate. The stress axis of the quartz is oriented at an angle of 45° to the light source magnetic field.

The polarization axis of the incident linearly polarized light is rotated 90° as the light passes through the stressed quartz. This rotation is due to the difference in the propagation velocities for those components of polarized light which are parallel and perpendicular to the quartz stress axis. The amount of rotation is controlled by appropriate selection of current to the driver coil and the optical path length of the quartz. As seen in Fig. 3, when the current applied to the driver coil is zero (no stress), only the π component is transmitted by the linear polarizer and thus passes through the absorption tube. When the driver coil current is adjusted so that the quartz is a half-wave plate (maximum stress), both π and σ components are rotated by 90°, and the linear polarizer passes only the σ or reference component.

The sample to be analyzed for mercury enters the furnace-absorption tube assembly where it is heated to 900° C. Mercury and its compounds atomize (thermally decompose) well below 900° C. Individual free atoms of mercury and decomposition products are then swept by the stream of sample gas into the light path of the absorption tube. Oxygen is introduced into the furnace chamber to promote combustion of organics and thus reduce smoke. The π component is attenuated due to absorption by mercury atoms and scattering by decomposition products and smoke. The σ component is attenuated by scattering and smoke only.

The detector consists of an interference filter or monochrometer which passes all Zeeman components of the 2537 Å line equally well, but blocks light of other wavelengths from striking the cathode of the photomultiplier tube (PMT). The PMT generates an output voltage proportional to the intensity of the π and σ components. If no mercury is present in the absorption tube, the probe and reference beams are absorbed and scattered identically by non-mercury background. Hence, as they alternatively fall upon the PMT, the light intensity does not change, and the PMT output voltage remains constant. In the presence of mercury, however, the probe component will be more strongly absorbed than the reference component, and the PMT output will vary at the audio frequency at which the switching from one beam to the other takes place (Fig. 5).

The PMT output, together with an audio reference signal from the oscillator driving the magnetic clamp, is fed into the lock-in-amplifier (Fig. 5). The tuned amplifier in the front end of the lock-in-amplifier accepts only those signals having the same frequency as that used by the VPRP to switch between π and σ beams. This amplifier first recognizes and then takes the difference between the π and σ components in the audio portion of the PMT output. It supplies a dc voltage which is proportional to this difference and thus is proportional to the density of mercury in the absorption tube.

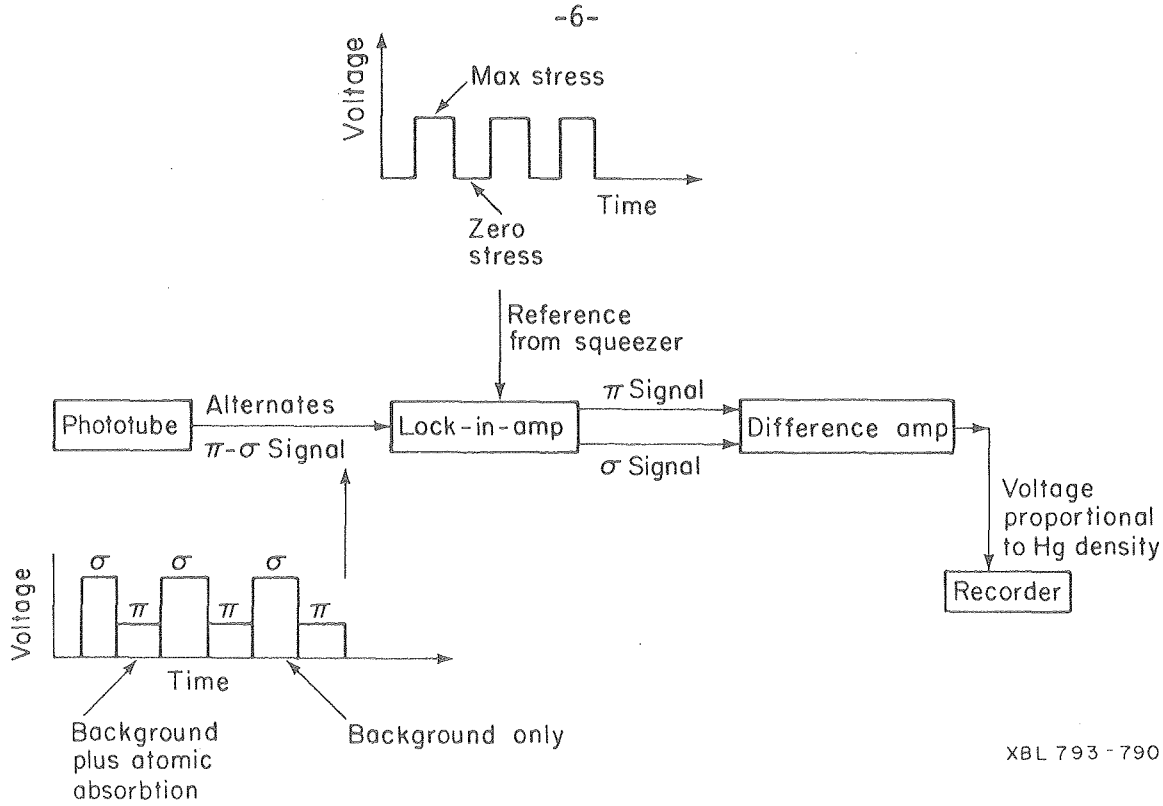

Figure 5. Signal processing electronics. To separate the π and σ signals, the lock-in amplifier requires a reference signal from the squeezer circuit. The square waves shown are an idealization; these signals actually vary sinusoidally.

The accuracy of the background correction obtained by ZAA through the use of spatially and temporally coherent π and σ beams and synchronous beam switching and electronic signal processing techniques results in a significant advance beyond conventional AA background correction. As a result, ZAA is capable of performing accurately with up to 95% attenuation (from smoke or broad-band UV adsorption) of the π and σ components. Thus, ZAA is capable of direct analysis of most gas, liquid and solid samples for mercury without prior chemical treatment. This direct analysis capability is the major advantage of ZAA over conventional AA for on-line field measurements.

GAS MONITOR

A ZAA spectrometer has been designed and built which is capable of continuously measuring mercury concentration in offgas streams on a real time basis. Specifically, a new light source, furnace assembly gas handling system and calibration system have been developed to accommodate gas sampling and mercury analysis under severe field conditions. These components and the performance of the instrument are described below.

Light Source

A new low-pressure mercury gaseous discharge lamp has been built and tested which will replace the radio-frequency excited electrodeless dis-

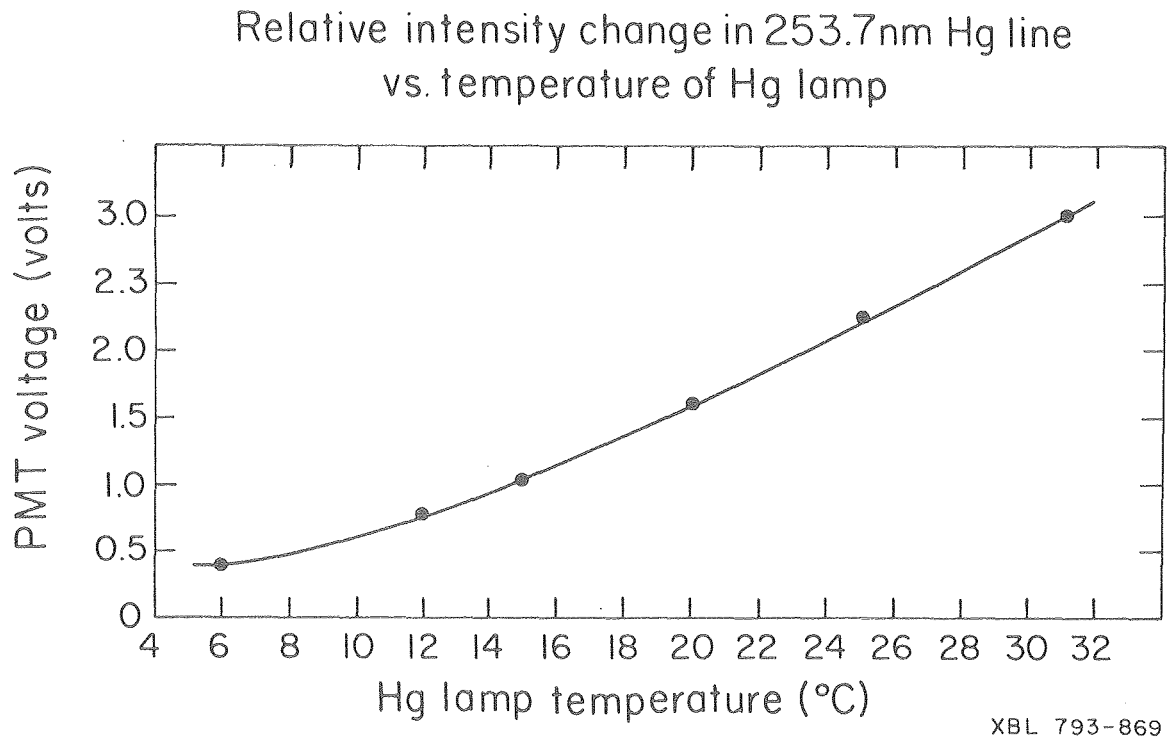

Figure 6. Change in the intensity of gaseous mercury discharge lamp with temperature.

charge lamp (EDL) previously in use.[6] This "pen light lamp" (PLL) consists of a U-shaped quartz tube containing argon and a small quantity of mercury. Minute electrodes are sealed in each end of the tube. The outer diameter of the tube is 7 mm. The lamp is surrounded by a soft iron water jacket fitted with a quartz window. The lamp-water jacket assembly fits between the pole tips of the permanent magnet which produces the Zeeman splitting of the resonance lines. The argon plasma and mercury resonance lines are produced by a 700 Hz high voltage driver. The 2537 Å line intensity obtained with the PLL is approximately 50% greater than that obtained with the EDL.

By far the most temperature-sensitive component of the spectrometer is the light source. This represents a serious problem for field applications where significant temperature fluctuations are likely to occur. The variation in the intensity of the PLL 2537 Å line with temperature is shown in Fig. 6. From 12° to 31° C, the intensity increases by a factor of three due to an increase in the mercury vapor pressure within the lamp. However, over this temperature range the sensitivity or response of the ZAA to a constant concentration of mercury remains constant within measurement errors (Fig. 7). This stability is achieved by routing the PMT signal through a log amplifier before it enters the tuned amplifier section of the lock-in-amplifier. Thus the electronic processing effectively filters out the effect of light intensity changes due to temperature fluctuations.

However, there is another temperature effect which is not filtered out by the electronics. The relative intensities of the π and σ lines are affected by

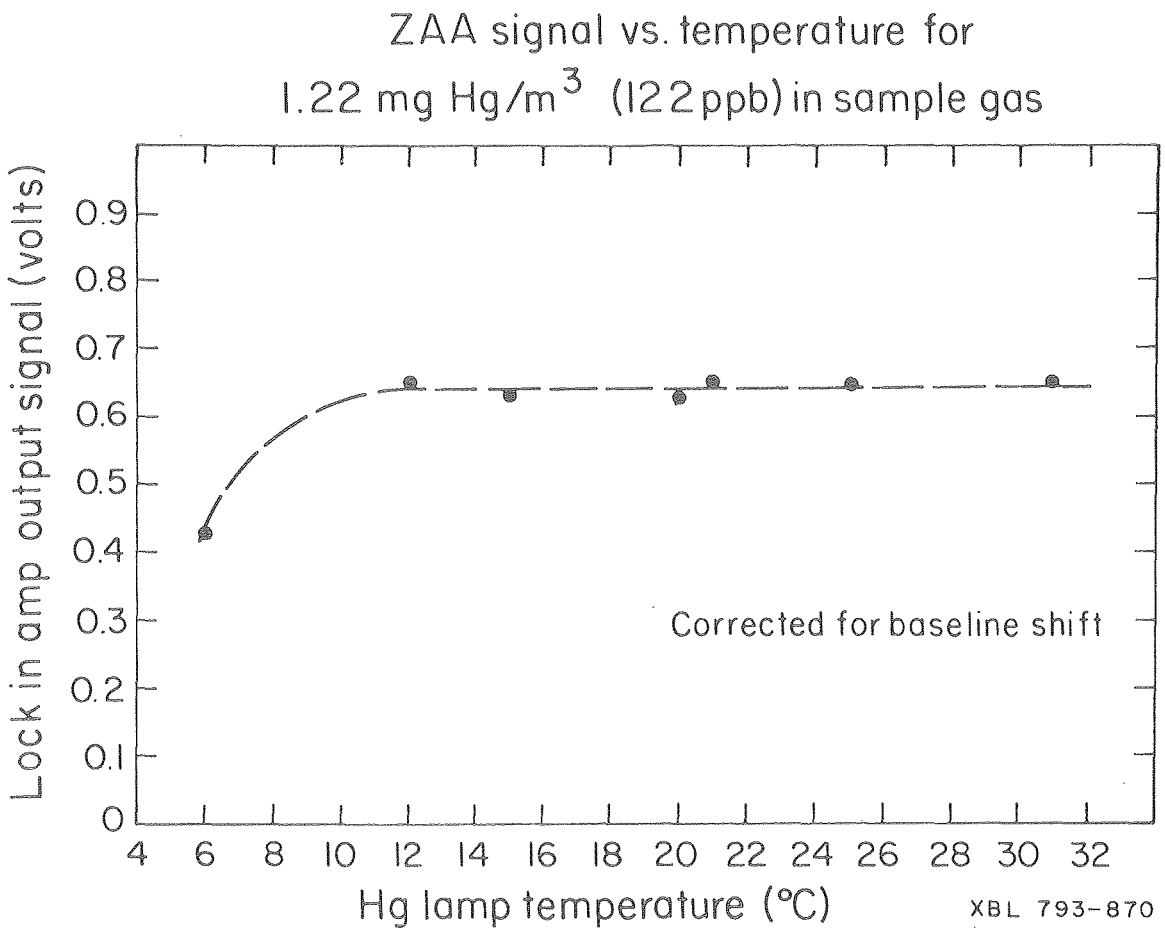

Figure 7. Temperature dependence of ZAA response to a constant concentration of mercury. The decrease in response at 6° C is an experimental anomaly caused by the defocusing of the light beam by water droplets condensed out on the outside of the light source window at this temperature.

self reversal or self absorption of these lines within the plasma of the mercury discharge lamp. This self reversal increases with temperature. This relative change in the π and σ intensities manifests itself as a change in instrumental baseline voltage and thus is indistinguishable from the signal produced by mercury in the sample gas. The magnitude of this effect is shown in Fig. 8. In the absence of mercury a 12-31° C change in temperature produces a 220 mV ZAA voltage as shown by the lower curve in Fig. 8. The upper curve shows this change in parts per billion (ppb) of mercury. If the lamp is operated at 25° C a variation of ± 1° C produces a 6 ppb error. This will be significant for measurements below 60 ppb. However, with the new PPL this problem has been eliminated by simply enclosing the lamp in the water jacket assembly, described above, and coupling it to a small constant-temperature bath mounted within the instrument. The temperature of the PLL can be controlled to within ± 0.2° C or ± 0.5 ppb mercury. This is approximately equal to the mercury detection limit. This type of temperature control of the light source was not possible with the old EDL.

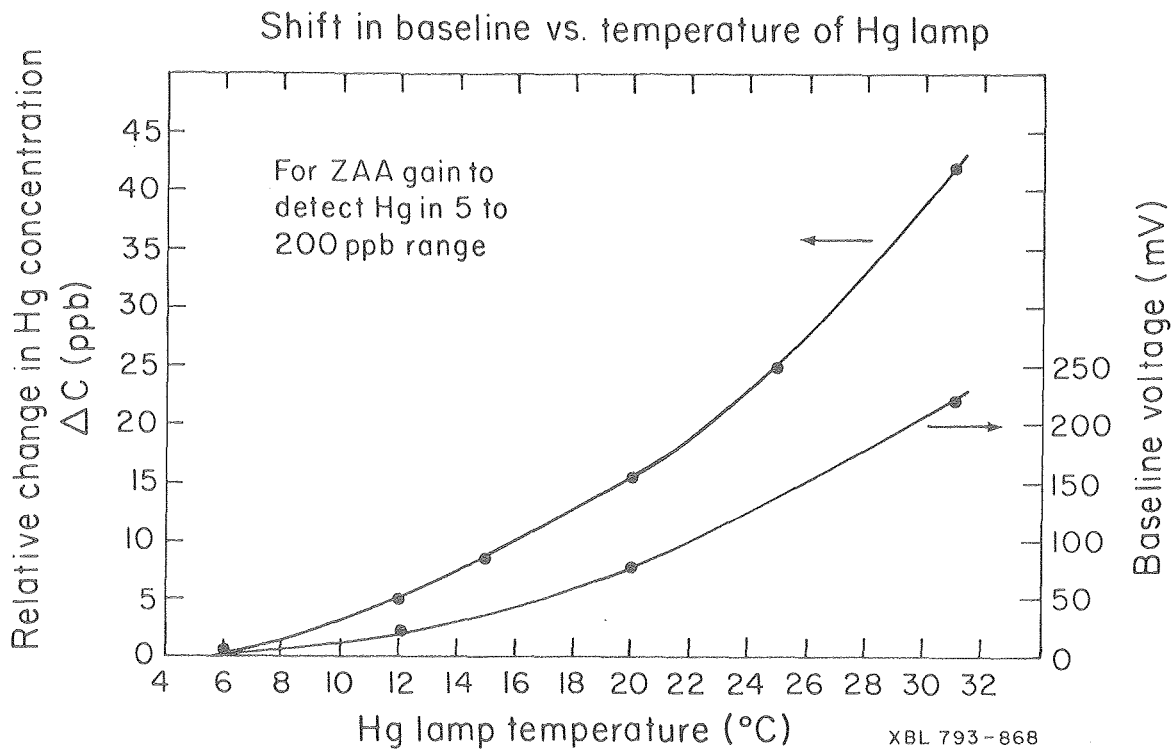

Figure 8. Change in ZAA output voltage due to temperature-induced self reversal in the absence of mercury in the sample gas. The lower curve shows this effect in terms of baseline voltage. The upper curve shows this effect in terms of apparent mercury concentration. Both curves are normalized to 6° C.

Another problem with the EDLs was the rf pickup in adjacent instruments (e.g., thermocouples and flow transducers) due to the rf excitation of the argon plasma. This problem has also been eliminated by the use of the PLL. Overall, the mercury PLL offers a significant improvement in ZAA versatility and performance.

Furnace - Absorption Tube Assembly

A new furnace for continuous on-line analysis of mercury in gas streams has been constructed and successfully operated at 900° C for extended periods. The furnace (Fig. 9) is constructed of 1/2 in. o.d., 0.049 in. wall, 321 stainless steel (SS) tubing welded into a tee. Incoming gases first pass through an atomization combustion chamber which is maintained at 900° C by joule heating. This chamber is filled with ceramic beads to break up the gas flow and increase the thermal contact area. The gases then pass through a small opening into an absorption chamber which is aligned along the optical path of the spectrometer. The temperature in this chamber is lower since the current in each leg is one-half of the flowing through the atomization chamber. Quartz windows at the ends of the absorption chamber pass the 2537 Å mercury resonance lines while isolating the hot sample gases from the ambient air. Gases exit the furnace through ports located near each end of the absorption chamber.

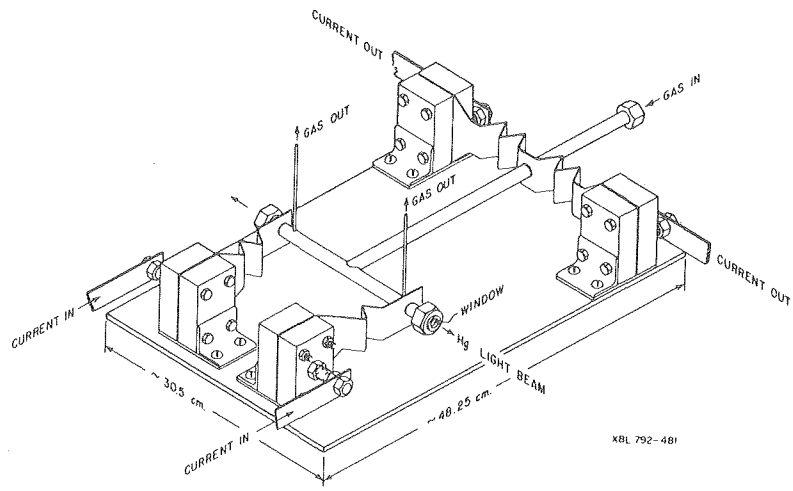

Figure 9. ZAA furnace for on-line analysis of mercury in gas streams.

Current and the mounting support for the furnace are supplied via variable-cross-section strips of 304 SS welded to the tubing. When the furnace is at operating temperature, the outer ends of these strips are cool, thus preventing the buildup of resistive oxide layers on the power connector surfaces.

The presence of hydrogen sulfide in oil shale offgas and consequent sulfidation reactions may create a serious corrosion problem inside the furnace. In an attempt to inhibit corrosion and maximize furnace lifetime, aluminum has been diffused into the surface of the tubing and subsequently oxidized by a process termed alonization. The resulting micro layer of alumina has been shown in laboratory and field experiments to reduce the rate of corrosive attack to stainless steels.

Calibration System

A dynamic calibration system which generates known concentrations of mercury vapor in a carrier gas will be used to calibrate the gas monitor. This system, which is shown in Fig. 10, is based upon the apparatus described by Nelson.[9] Heated air impinges on the surface of a pool of mercury warmed to about 60° C. The mercury-laden gas then travels through two successive equilibration vessels; excess mercury condenses, and the gas leaves the vessel saturated with mercury at an accurately determined temperature. The saturated gas is then diluted with mercury-free gas and introduced into the sample line. A range of concentrations is obtained by varying the ratio of mercury calibration gas to dilution gas. With this system it is possible to produce mercury concentrations which range from 0.01 mg/m^3 (1 ppb) to approximately 20 mg/m^3 (2 ppm).

Gas System

The following discussion describes the gas sampling-metering system, develops the necessary calibration formulae, and summarizes the parameters to

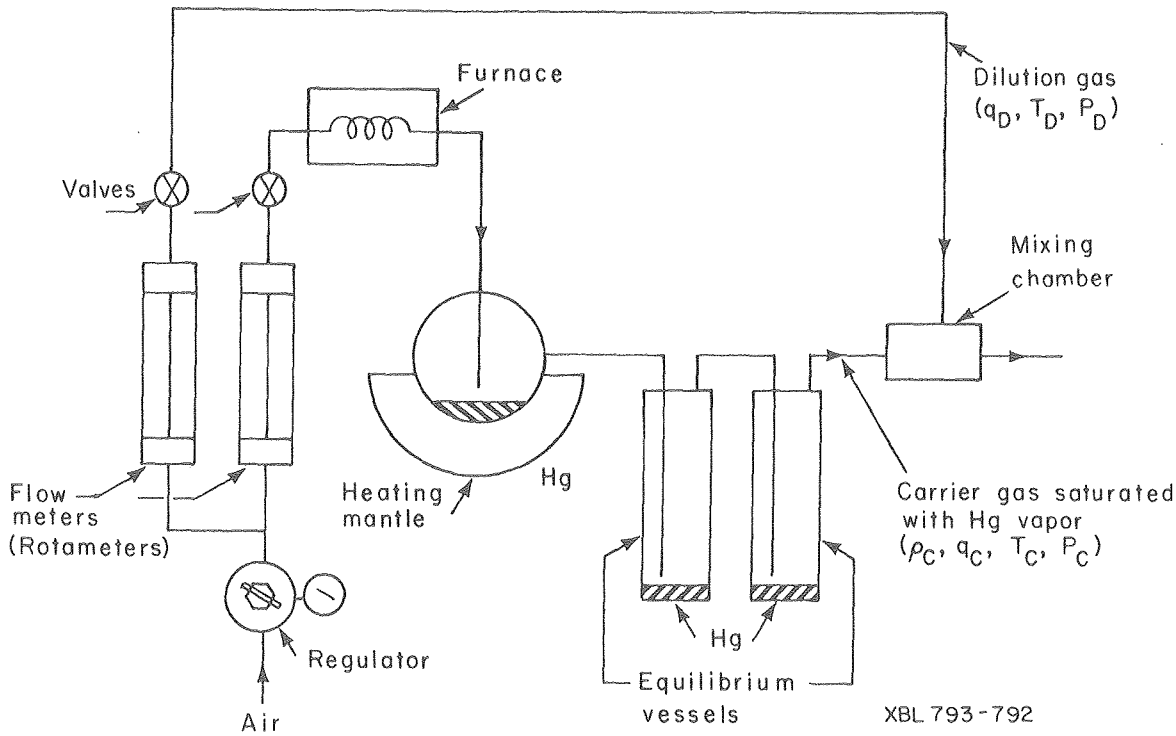

Figure 10. Schematic of mercury calibration system.

be measured. The gas handling system is shown in Fig. 11. Sample gas, e.g., retort offgas of a given temperature, pressure, and mercury density (T, P, ρ), enters the heated sample line at a volumetric flow rate, q. The heated sample line is to be maintained at approximately 200° C. At point A (Fig. 11), oxygen (T_{O_2}, P_{O_2}, q_{O_2}) will be continuously introduced and mixed with the sample gas. This oxygen is used to promote combustion of organics and thus reduce the level of smoke in the ZAA furnace. During calibration, retort offgas will be diverted, and mercury vapor in a carrier gas (T_C, P_C, q_C, ρ_C) will be introduced into the sample line at point A along with dilution gas (T_D, P_D, q_D) and oxygen.

The sample and calibration gases then pass into the furnace where they are heated to a constant temperature (900° C) to atomize the mercury. The density of mercury atoms in the furnace is then measured and converted into a voltage response as described above.

It is essential that the furnace be maintained at a constant temperature between calibration runs since the voltage response of the ZAA to a given concentration of mercury varies inversely with temperature. In order to achieve the constant-temperature condition, volumetric flow rate through the furnace (q_M^o) must be held constant. This is to be accomplished by the use of a flow controller. The controller system consists of a flow sensor, which measures the flow downstream of a rotary vane pump, and a servo metering valve in parallel with pump which maintains the desired flow. Flow readings q_M^o are for standard conditions. The flow controller will be calibrated with a wet-test meter located downstream of the controller. Periodic Calibration of the flow

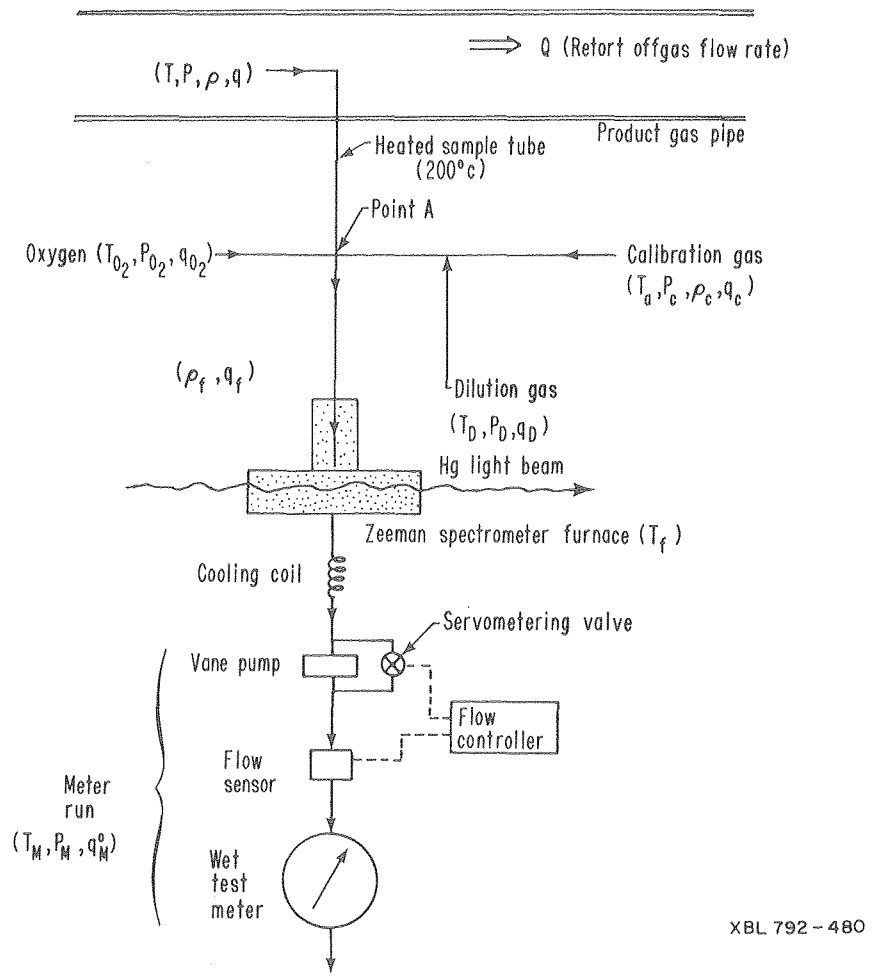

Figure 11. Schematic of gas handling system for ZAA mercury monitor.

Table 1. REQUIRED MEASUREMENTS FOR GAS HANDLING SYSTEM

	Temperature	Pressure	Flow
Offgas	T	P	
Oxygen	T_{O_2}	P_{O_2}	q_{O_2}
Calibration gas	T_C	P_C	q_C
Dilution gas	T_D	P_D	q_D
Meter run	T_M	P_M	q_M^o
Ambient conditions	T_{room}	P_{atm}	

controller is necessary since the measurement of gas flow by the sensing device depends upon the specific heat of the sample gas. This will change during the course of a retort run. Table 1 summarizes the gas parameters which must be monitored during the analysis of mercury.

To calibrate the ZAA, the voltage response of the instrument must be related to a known density of Hg atoms (ρ_F) entering the furnace. To calculate ρ_F it cannot be assumed that the sample and calibration gases will be at the same temperature initially. Therefore, the Hg densities in both sample and calibration gases must be corrected for temperature differences. In addition, dilution of sample gas by oxygen and calibration gas must be determined. To calculate ρ_F, we assume that the ideal gas law adequately describes changes of state in sample and calibration gas. Density and volumetric flow will be converted to standard conditions (760 mm Hg, 0° C) using Eqs. (1) and (2):

$$\rho^\circ = \rho \left(\frac{T}{273}\right)\left(\frac{760}{P}\right), \tag{1}$$

$$q^\circ = q \left(\frac{273}{T}\right)\left(\frac{P}{760}\right). \tag{2}$$

T is temperature in °K; P is pressure in mm Hg; ρ is the density of mercury in mg Hg/m^3; q is the volumetric flow rate in m^3/min; and the superscript zero designates standard conditions.

The density ρ_F entering the furnace is the sum of the flow-weighted mercury densities in the sample and the calibration-oxygen lines,

$$\rho_F^\circ = \rho^\circ \frac{q^\circ}{q_F^\circ} + \rho_C^\circ \frac{q_c^\circ}{q_F^\circ}, \tag{3}$$

where

$$q_F^\circ = q^\circ + q_C^\circ + q_D^\circ + q_{O_2}^\circ.$$

The measured quantities q_C, q_D and q_{O_2} are converted to standard conditions using Eq. (1) and the measured temperatures and pressures. The standard flow rate of sample gas, q°, is not determined directly but is obtained by difference between q_M° and $q_c^\circ + q_D^\circ + q_{O_2}^\circ$.

With the calibration system turned on and the sample gas diverted, the density of mercury entering the furnace becomes, from Eq. (3),

$$\rho_F^\circ = \rho_C^\circ \frac{q_C^\circ}{q_C^\circ + q_D^\circ + q_{O_2}^\circ}. \tag{4}$$

The mercury density in the calibration gas at standard conditions ρ_C° is calculated using Eq. (1):

$$\rho_C^\circ = \rho_C \frac{T_C}{273} \frac{760}{P_C},$$

where

$$\rho_C = (3.22X10^6)\frac{P(Hg)}{T_C}\left(\frac{mg\ Hg}{m^3}\right).$$

The measured temperature of the calibration gas is T_C, and P(Hg) is the vapor pressure of mercury at T_C obtained from standard tables.

As noted above, a calibration curve can be obtained by varying the mercury calibration gas and dilution gas ratio and recording the ZAA voltage response. When the calibration system is turned off and the sample gas is reintroduced, the calibration curve is used to determine the unknown mercury density ρ° in the sample gas.

However, during analysis of the sample gas, the mercury density entering the furnace (ρ_F°) must be corrected for dilution by O_2 introduced at point A. From Eq. (3), we have:

$$\rho_F^\circ = \rho^\circ \frac{q^\circ}{q^\circ + q_{O_2}^\circ} \qquad (5)$$

An alternate calibration procedure is to inject the calibration gas directly into the sample gas. The concentration ρ_F° in this case is given by Eq. (3). If matrix effects are a problem, this method will be used to determine the unknown concentration in the sample gas by standard additions.

SUMMARY

This paper describes a technique to continuously measure total mercury in a gas stream in the presence of high concentrations of organics, smoke, oil mist and other interfering substances. The technique employees Zeeman atomic absorption spectroscopy as the mercury detector, which has been successfully used to measure mercury in oil shale offgases. The instrument consists of a light source which provides the 2537 Å mercury emission line; a furnace-absorption tube assembly where the sample is vaporized and swept into the light path and a detector which converts the signal into an ac voltage for processing. Sample gas is heated to 900° C in the furnace-absorption tube assembly aligned with the optical axis of the ZAA spectrometer. The 2537 Å mercury emission line (π) and a reference line (σ) are generated by a single

discharge lamp operated in a 15 kG magnetic field. The difference between the π and σ components is taken by a lock-in-amplifier and converted to a signal which is proportional to the amount of mercury in the gas.

ACKNOWLEDGEMENTS

This work was supported by the Environmental Protection Agency under contract No. 68-03-2667 and by the Division of Environmental Control Technology of the U. S. Department of Energy under contract No. W-7405-ENG-48.

REFERENCES

1. Fox, J. P., J. J. Duvall, K. K. Mason, R. D. McLaughlin, T. C. Bartke, and R. E. Poulson. Mercury Emissions From A Simulated In-Situ Oil Shale Retort. In: Procedings of 11th Oil Shale Symposium, Golden, Colorado. April 1978.

2. Fruchter, J. S., J. C. Laul, M. R. Petersen, and P. W. Ryan. High Precision Trace Element and Organic Constituent Analysis of Oil Shale and Solvent-Refined Coal Materials. In: Symposium on Analytical Chemistry of Tar Sands and Oil Shale, ACS, New Orleans. March 1977.

3. Poulson, R. E., J. W. Smith, N. B. Young, W. A. Robb, and T. J. Spedding. Minor Elements in Oil Shale and Oil-Shale Products. LERC RI 77-1, 1977.

4. Bertine, K. K. and E. D. Goldberg. Fossil Fuel Combustion and the Major Sedimentary Cycle. Science, 173: 223, 1971.

5. Klein, D. H., A. W. Andren, J. A. Carter, and others. Pathways of Thirty-Seven Trace Elements Through Coal-Fired Power Plant. Env. Sci. and Tech. 9: 973, 1975.

6. Hadeishi, T. and R. McLaughlin. Zeeman Atomic Absorption Spectroscopy. LBL-8031, 1978.

7. Hadeishi, T., and R. D. McLaughlin. Isotope Zeeman Atomic Absorption; A new approach to chemical analysis. American Laboratory, August 1975.

8. Hadeishi, T. Isotope-shift Zeeman Effect for Trace-Element Detection: An Application of Atomic Physics to Environmental Problems. Appl. Phys. Lett. 21: 438, 1972.

9. Nelson, G. O. Simplified Method for Generating Known Concentrations of Mercury Vapor in Air. Rev. Sci. Instr. 41: 776, 1970.

This report was done with support from the Department of Energy. Any conclusions or opinions expressed in this report represent solely those of the author(s) and not necessarily those of The Regents of the University of California, the Lawrence Berkeley Laboratory or the Department of Energy.

Reference to a company or product name does not imply approval or recommendation of the product by the University of California or the U.S. Department of Energy to the exclusion of others that may be suitable.

TECHNICAL INFORMATION DEPARTMENT
LAWRENCE BERKELEY LABORATORY
UNIVERSITY OF CALIFORNIA
BERKELEY, CALIFORNIA 94720