To be presented at the Association of Energy Engineers Conference, San Francisco, CA, March 21-23, 1979

LBL-8918

CONF-790358--1

GEOTHERMAL ENERGY FOR INDUSTRIAL APPLICATION

R. L. Fulton

March 1979

Prepared for the U. S. Department of Energy
under Contract W-7405-ENG-48

MASTER

DISTRIBUTION OF THIS DOCUMENT IS UNLIMITED

DISCLAIMER

This report was prepared as an account of work sponsored by an agency of the United States Government. Neither the United States Government nor any agency Thereof, nor any of their employees, makes any warranty, express or implied, or assumes any legal liability or responsibility for the accuracy, completeness, or usefulness of any information, apparatus, product, or process disclosed, or represents that its use would not infringe privately owned rights. Reference herein to any specific commercial product, process, or service by trade name, trademark, manufacturer, or otherwise does not necessarily constitute or imply its endorsement, recommendation, or favoring by the United States Government or any agency thereof. The views and opinions of authors expressed herein do not necessarily state or reflect those of the United States Government or any agency thereof.

DISCLAIMER

Portions of this document may be illegible in electronic image products. Images are produced from the best available original document.

LEGAL NOTICE

This report was prepared as an account of work sponsored by the United States Government. Neither the United States nor the Department of Energy, nor any of their employees, nor any of their contractors, subcontractors, or their employees, makes any warranty, express or implied, or assumes any legal liability or responsibility for the accuracy, completeness or usefulness of any information, apparatus, product or process disclosed, or represents that its use would not infringe privately owned rights.

LBL-8918

NOTICE
This report was prepared as an account of work sponsored by the United States Government. Neither the United States nor the United States Department of Energy, nor any of their employees, nor any of their contractors, subcontractors, or their employees, makes any warranty, express or implied, or assumes any legal liability or responsibility for the accuracy, completeness or usefulness of any information, apparatus, product or process disclosed, or represents that its use would not infringe privately owned rights.

GEOTHERMAL ENERGY FOR INDUSTRIAL APPLICATION

R. L. Fulton
Lawrence Berkeley Laboratory
1 Cyclotron Road
Berkeley, California 94720

To be presented at the Association of Energy Engineers Conference "Energy - The New Rules", March 21-23, 1979, San Francisco, California

Prepared for the Division of Geothermal Energy of the U.S. Department of Energy under Contract W-7405-ENG-48

DISTRIBUTION OF THIS DOCUMENT IS UNLIMITED

GEOTHERMAL ENERGY FOR INDUSTRIAL APPLICATIONS

Introduction

Geothermal energy, heat from the earth, has been known and used for centuries. Ancient man found hot waters and vapors that issued from within the earth both useful and beneficial. Geothermal waters cooked their food, heated their shelter and cured their sicknesses. Attention is again being turned to geothermal energy as an alternative to fossil fuels that are rapidly becoming more expensive.

The Resource

The source of geothermal energy is the heat from the earth's mantle and core along with heat generated within the crust by the decay of radioactive elements. Temperatures below the earth's surface are determined primarily by the conductive flow of heat through solid rocks, by the convective flow of circulating liquids, or by local intrusions of magmatic materials into the crust.

Where conduction is the dominant mode of heat transfer, temperatures increase continuously with depth; the gradient being determined by the rock's thermal conductivity. "Normal" temperature gradients range from 8° to 50°C/km (4.4° to 27.4°F/1000 ft). Thus, in areas of "normal" temperature gradients, the temperature at 10,000 ft depth will be from 44° to 274°F above the ambient surface temperature.

Areas with high temperature gradients, that would be considered economically attractive for exploitation, usually result from large igneous intrusions or hydrothermal-convection systems.

Hydrothermal-convection systems are the most frequent geologic occurences that create potentially economic exploitable geothermal resources. In hydrothermal-convection systems, most of the heat is transported in circulating fluids, either liquid water or steam. A convection system can transfer heat upward toward the surface with a small temperature gradient. In this way, energy at useful temperatures can be tapped at economically shallow depths. The fluids in a hydrothermal-convection system also provide a convenient medium for removing the heat energy stored in the rock and fluid of the convecting system.

There are two types of hydrothermal systems: vapor-dominated and liquid-dominated. Vapor-dominated systems produce saturated or slightly superheated steam. While the production of dry steam is very desirable, vapor-dominated systems are rare. The Geysers, California; Larderello, Italy; and Matsukawa, Japan, are vapor-dominated systems. Liquid-dominated systems are the more common hydrothermal systems and produce liquid water or a mixture of water and steam at the wellhead. The steam fraction can range up to 30% of the total mass flow from a well.

Two other types of systems that have not yet been exploited, but that store large amounts of geothermal energy, are geopressured systems and hot dry rock. Geopressured systems are characterized by high liquid pressures caused by the weight of overlaying sediments, and are found in deep sedimentary basins along the Gulf coast of the U.S. The fluids in the geopressured systems may be saturated with hydrocarbons. The U.S. Department of Energy (DOE) has research underway to evaluate these resources.

Hot dry rock systems are bodies of very low permeability rock, such as igneous intrusions which have retained higher temperatures than their surroundings. They do not contain water that could serve as a heat transport fluid. Los Alamos Scientific Laboratory is developing techniques to drill into these hot dry rock masses, create fractures to provide permeability, and circulate water through the fractures to transport the heat energy to the surface.

Geothermal systems are concentrated in the seismicly active regions of the world as shown in Fig. 1. These regions are typified by a thinner crust and many local magmatic intrusions. Thick sediments or highly fractured rocks provide permeability and pathways for groundwater to reach deep heat sources and form hydrothermal-convective systems.

Figure 2 shows the location of hot springs in the United States. Most, if not all, of these springs are associated with hydrothermal-convection systems. The U. S. Geological Survey (Ref. 3) estimates the recoverable thermal energy in the identified hydrothermal convection systems with temperatures above 90°C to be 400 x 10^{15} Btu (400 Quad). They also estimate the undiscovered accesible resource base to be 2.76 times the identified accessible resource base. If the recoverable thermal energy fraction of the undiscovered systems is the same as assumed for the identified systems, then the total recoverable thermal energy is 1500 Quad. Some of the better understood U.S. geothermal resources are listed in Table 1.

Geothermal resources are tapped by drilling wells into the permeable rocks of a hydrothermal system and removing the fluid. Well depths range from a few hundred feet to 8000 ft. Many geothermal wells are naturally artesian and will flow hot water or a mixture of hot water and steam without pumping. Downwell pumps can be used to increase well flow or to prevent the water from flashing to steam in the wellbore.

The fluids in a hydrothermal system are in chemical equilibrium with the rocks in which they are stored. This means that the fluids contain dissolved solids and gases. Total dissolved solids range from 500 ppm to 250,000 ppm, with most resources containing less than 5000 ppm. These dissolved solids affect the scale-forming potential of the particular geothermal fluid, and the design of heat exchange and other equipment should take this into account.

Applications of the Resource

Worldwide, the use of geothermal energy, not including mineral baths or spas, is approximately evenly divided between electrical generation and non-electric direct heat uses. At present the world geothermal electrical generating capacity is about 1800 MWe, with the U.S. the largest single producer at 608 MWe. All of the U.S. electrical generating capacity is presently located at The Geysers, California. The Geysers is a vapor-dominated resource approximately 40 miles north of San Francisco that has been producing electricity for over 15 years. Continued development to over 2000 MWe by 1987 is planned, with capacity being added in 50, 100 and 130 MWe increments.

Generation of electricity from vapor-dominated systems involves gathering the dry steam from production wells and expanding it in steam turbines. Turbine inlet pressures at The Geysers are approximately 100 psig. Noncondensable gases are typically present in the geothermal steam in concentrations up to a few percent. These gases are primarily CO_2, with some H_2S, CH_4, H_2, N_2, A, and NH_3. Turbine and condenser materials must take into account these contaminants; otherwise, there is little change from conventional steam technology. Electrical production from the vapor-dominated system at Larderello, Italy, began in 1905 and continues today.

Liquid-dominated resources present a different utilization problem than vapor-dominated resources. Larger total mass flows of fluid must be removed from the reservoir, because the energy is available primarily as sensible, not latent, heat. Electricity is presently produced from liquid-dominated reservoirs by flashing the liquid water from the reservoir and expanding the resulting steam in a turbine. Flashed steam power plants are in operation in New Zealand, Japan, Mexico, El Salvador, and Iceland. Both single-stage and two-stage (Fig. 3) flashed steam power plants are in use.

Another electrical production process is a closed Rankine cycle or "binary cycle" (Fig. 4). In the binary cycle a working fluid such as

isobutane or isopentane is heated and vaporized by the geothermal fluid and then expanded through a turbine to extract mechanical work. The binary cycle has the potential for requiring lower geothermal fluid flows for a given plant capacity than the flashed steam process. The binary cycle is especially suitable for application to resources below 200°C. No binary cycle plants are in present commercial operation.

Present direct heat applications of geothermal energy are space heating, domestic hot water, greenhouses, fish farming, and industrial process heat. District space heating and domestic hot water systems are in operation in Iceland, Hungary, Japan, USSR and France. Individual space heating systems have been in use in Klamath Falls, OR and Boise, ID for over 50 years. Small district heating systems are also in operation in these cities. Direct heat applications using geothermal energy are located in several western states and in Iceland, Japan, Hungary and other countries.

Industrial process heat is one of the most attractive and potentially significant applications of geothermal energy. In the U.S., the amount of industrial process heat used at temperatures below 400°F is approximately equal to the energy used for residential and commercial space heating and domestic hot water. Industrial process heat with its large potential demand, localized loads, and relatively high constant load factors is an attractive candidate for geothermal energy utilization.

Designing or adapting a plant for geothermal process heat will most benefit those processes that require large amounts of heat. The use of lower-cost geothermal process heat will have the greatest economic effect on those products that have a larger portion of their cost in heat energy. The large heat-energy intensive industries are: food and food products, paper and allied products, chemicals, and petroleum and coal tar products. Plants in these industries have great potential for reducing their dependence on fossil fuel energy and for reducing their energy costs by considering the use of geothermal energy.

Several processes important to the food processing industry are well-suited for adapting to geothermal energy: drying, evaporation/crystallization, cooking, and absorption refrigeration. Some drying processes are limited in the maximum temperatures that can be used; here, geothermal fluid temperatures are direct replacements. Other drying processes that presently use combustion gases directly can be modified to use finned-tube air heaters and longer dryer residence times. Adapting evaporation/crystallization processes to geothermal energy is discussed in Reference 12. Both ammonia-water and lithium bromide-water absorption refrigeration systems can be "fueled" with geothermal fluid (Ref. 14).

Integrated paper mills are prime candidates for direct use of geothermal energy in their bleached kraft paper processes and in the evaporation of black liquor. Many of the pulp and paper mills are already located in the geothermal areas of the Pacific Northwest and California and near the Gulf Coast where geopressured resources are under investigation.

The chemical industry has several processes that consume large amounts of process steam which could be supplied from geothermal sources. The most important of these processes are: alumina via the Bayers Process, caustic soda from diaphram cells, cellulose acetate, $MgCl_2$ plus soda ash via Bicarbonate Process, and soda ash via the Sesqui Process. The raw materials for these chemical processes are also found in the geothermal areas of the Western U.S.

Integrating geothermal energy into a process or plant design should take into account the characteristics of the geothermal "fuel". There will be an upper limit on the available maximum temperature. Temperatures higher than those available from the geothermal fluid may be required in certain parts of the process; so it may not be possible to completely eliminate the need for fossil fuel. Different processes or equipment than now used with fossil fuel may be required.

Many fossil fueled plants use process steam in steam turbines to drive pumps and other machinery. When adapting such a plant to geothermal

fuel, consideration must be given to substituting electrical drives. The electrical energy can then be purchased or cogenerated from the geothermal fuel. The relative amounts of geothermal, fossil and electrical energy used in a plant must be determined by considering the cost, availability and reliability of each energy source. Optimum process conditions may change, as well as the optimum ratio of capital and operating costs.

Several industrial process heat applications are in service throughout the world and are listed in Table 2. These are all plants that have been especially designed and sited to take advantage of a geothermal resource. One, the Myvatin diatomite plant in Iceland, exploits a water covered deposit which could not be developed without the availability of ample and inexpensive geothermal energy. More detailed information on these applications can be obtained from the References listed.

Recent DOE sponsored studies have investigated several industrial processes for their adaptability to geothermal process heat (Refs. 11-15). As a result of a recent Program Opportunity Notice, DOE is contracting with industry for field experiments that will help to demonstrate the direct use of geothermal energy. These field experiments will include retrofitting portions of a sugar beet processing plant and of a potato processing plant to use geothermal energy.

The cost of geothermal energy will vary depending upon the circumstances of each individual resource. While there are no existing large installations in the U.S., recent studies have estimated the cost of geothermal energy for industrial process use at from $\$0.50/10^6$ Btu to $\$5.00/10^6$ Btu, depending upon the particular site and process studied. Since geothermal energy is delivered as hot water or steam, conversion efficiencies should be taken into account in comparing energy costs. Boilers or water heaters using fossil fuels can convert only 70-85% of the fossil fuel energy to useful thermal energy. The balance of the fossil fuel energy is lost in stack losses. All other things being equal, geothermal energy, then, is more valuable than fossil fuel energy by the ratio of 100% utilization to 70-85% utilization.

Experience in Iceland with district heating systems indicates well field and collection system costs are from $0.15/10^6$ Btu for 300°F to $0.62/10^6$ Btu for 212°F geothermal fluid. Their transmission costs run $0.04 to $0.11/10^6$ Btu per mile. Their distribution costs (to the individual homes) are estimated at $1.12/10^6$ Btu.

The Tasman Pulp and Paper Company Limited has used geothermal energy in its Kawerau, New Zealand integrated pulp, paper and timber plant since 1955. Out of a total process steam demand of 820,000 lb/hr, 200,000 lb/hr is supplied by geothermal steam. Up to 320,000 lb/hr of 100 psig geothermal steam is also supplied to a 10 MW noncondensing turbo-generator. From 1970 to 1974, the average yearly maintenance cost of the geothermal system, excluding the turbo-generator, was $84,000. In 1974, it was estimated that the plant's yearly purchased fuel costs were reduced by 70% ($2.2 million) by the use of geothermal energy. The Tasman Company's total investment in the development of geothermal energy for its Kawerau plant is approximately $5 million.

Federal efforts to stimulate the use of geothermal energy in the U.S. include the Geothermal Loan Guarantee Program. Under this program, lending institutions are insured against default on loans for geothermal projects up to $25 million. The first facility to go into operation under this plan was the Brady Hot Springs vegetable dryer (Table 2) that began operation in November, 1978. The operators of this facility estimate their geothermal energy cost to be $2.00/10^6$ Btu less than the cost of natural gas.

A Geothermal Component Test Facility is operated by DOE at East Mesa in the Imperial Valley of California. The facility provides geothermal fluid, laboratory facilities, cooling water and other services for the testing of geothermal components under field conditions. The facility is managed by the DOE San Francisco Operations Office, Oakland, CA.

Most of the states that have geothermal resources have active programs to assist private industry to develop their geothermal resources. Responsibility for this usually resides with the state energy agency or state geologist.

The major organization representing the private sector in geothermal energy development is the Geothermal Resources Council, P.O. Box 98, Davis, CA 95616. The Geothermal Resources Council has a membership of approximately 1000 individuals representing all aspects of geothermal energy development and utilization. It sponsors workshops and symposia, holds an annual meeting with technical sessions, and publishes reports and a bi-monthly bulletin.

The use of geothermal energy is just beginning. The increasing cost of petroleum and natural gas since 1973 is providing the impetus to very carefully examine geothermal energy as a resource and to determine where it will fit into the energy source spectrum. The question is not which energy source will we use, but in what ways can we best use each source. There are many attractive match-ups between geothermal energy resources and industrial process heat requirements. As time goes by, industrial plants sited and designed to utilize geothermal energy will be built.

REFERENCES

1. Kruger, P., and C. Otte, Geothermal Energy, Stanford Univ. Press, Palo Alto, Ca., 1973.

2. Wahl, E.F., Geothermal Energy Utilization, John Wiley & Sons, New York 1977.

3. Muffler, L.J.P., ed., "Assessment of Geothermal Resources of the United States - 1978", Geological Survey Circular 790, United States Department of Interior, 1978.

4. Lienau, P.J., and J.W. Lund, eds., "Multipurpose Use of Geothermal Energy for Industrial", proceedings of the International Conference on Geothermal Energy for Industrial, Agricultural, and Commercial-Residential Uses, Oregon Institute of Technology, Klamath Falls, Oregon, 1974.

5. U.S. Department of Energy, "Proceedings: NATO-CCMS Conference on the Economics of Direct Uses of Geothermal Energy", June, 1977, Report No. CONF-770681.

6. Proceedings of the Second United Nations Symposium on the Development and Use of Geothermal Resources, San Francisco, California, USA, May, 1975.

REFERENCES (Cont'd)

7. Geothermal Resources Council, Transactions of the Second Annual Meeting, July, 1978, Hilo, Hawaii, 1978.

Note: References 4 through 7 each contain many individual technical papers on both geothermal energy resources and applications.

8. Howard, J.W. ed., "Present Status and Future Prospects for Non-Electrical Uses of Geothermal Resources," Lawrence Livermore Laboratory Report NATO-CCMS No. 40, 1975.

9. Davey, J.V., "Survey Report: Study of Information/Education Discussions with Private Industries and Public Institutions on the Direct-Heat Utilization of Geothermal Energy", Lawrence Berkeley Laboratory Report No. LBL-5988, 1977.

10. DSS Engineers, Inc., "Geothermal Resource Utilization - Paper and Sugar Cane Industries", Lawrence Livermore Laboratory Report No. UCRL-13633, 1975.

11. DSS Engineers, Inc., "Feasibility of Developing Geothermal Energy Industrial Complexes", for the Department of Energy under Contract EG-77-C-07-1627, 1978.

12. Bechtel Corporation, "Applications of Geothermal Resources in the Evaporation and Crystallization Industry", for the Department of Energy under Contract EY-76-C-03-1328, 1977.

13. Westec Services, Inc., "Engineering and Economic Feasibility of Utilizing Geothermal Heat from the Heber Reservoir for Industrial Processing Purposes at Valley Nitrogen Producers Inc., El Centro Agricultural Chemical Plant", for the Department of Energy under Contract E(04-3)-1323, 1977.

14. Aerojet Energy Conversion Co., "Geothermal Absorption Refrigeration for Food Processing Industries", for the Department of Energy under Contract No. EY-76-C-03-1319.

15. Aerojet Energy Conversion Co., "Multi-Use Geothermal Energy System with Augmentation for Enhanced Utilization", for the Department of Energy under Contract No. ET-78-C-03-1740.

16. Sacarto, D.M., "State Policies for Geothermal Development; National Conference of State Legislatures, Denver, Colorado, 1976.

EXISTING GEOTHERMAL PROCESS HEAT APPLICATIONS

Application	Resource temperature	Capacity	Reference
Pulp & paper mill Kawerau, New Zealand	390°F steam[1]	200,000 lb/hr steam	4
LiBr absorption air conditioning Rotorua, New Zealand	300°F	130 ton cooling load	5
Alfalfa pellet drying Broadlands, New Zealand	350°F steam[1]	40,000 lb/hr steam	4
Diatomaceous earth drying Lake Myvatin, Iceland	340°F	90,000 lb/hr steam	4
Vegetable drying Brady Hot Springs, Nevada	270°F	N/A	-

[1]This is the temperature at which the steam is used. The resource temperature is higher.

TABLE 2

TYPICAL U.S. HYDROTHERMAL CONVECTION SYSTEMS

Name of Area	Est. Reservoir Temperature (°C) /1	Est. Wellhead Thermal Energy (Quad) /1	Typ. Well Flow Rate gpm	Total Dissolved Solids (ppm)
Clear Lake, California	195	9.8	N/A	N/A
Westmoreland, California	215	16.7	N/A	N/A
Heber, Califorina	180	7.7	800 pumped	15,000
Brady Hot Springs, Nevada	155	2.0	N/A	N/A
Bruneau - Grand View, Idaho	110	113.	N/A	N/A
Raft River, Idaho	147	1.85	600 unpumped	<2000

/1 Ref. 3.

TABLE 1

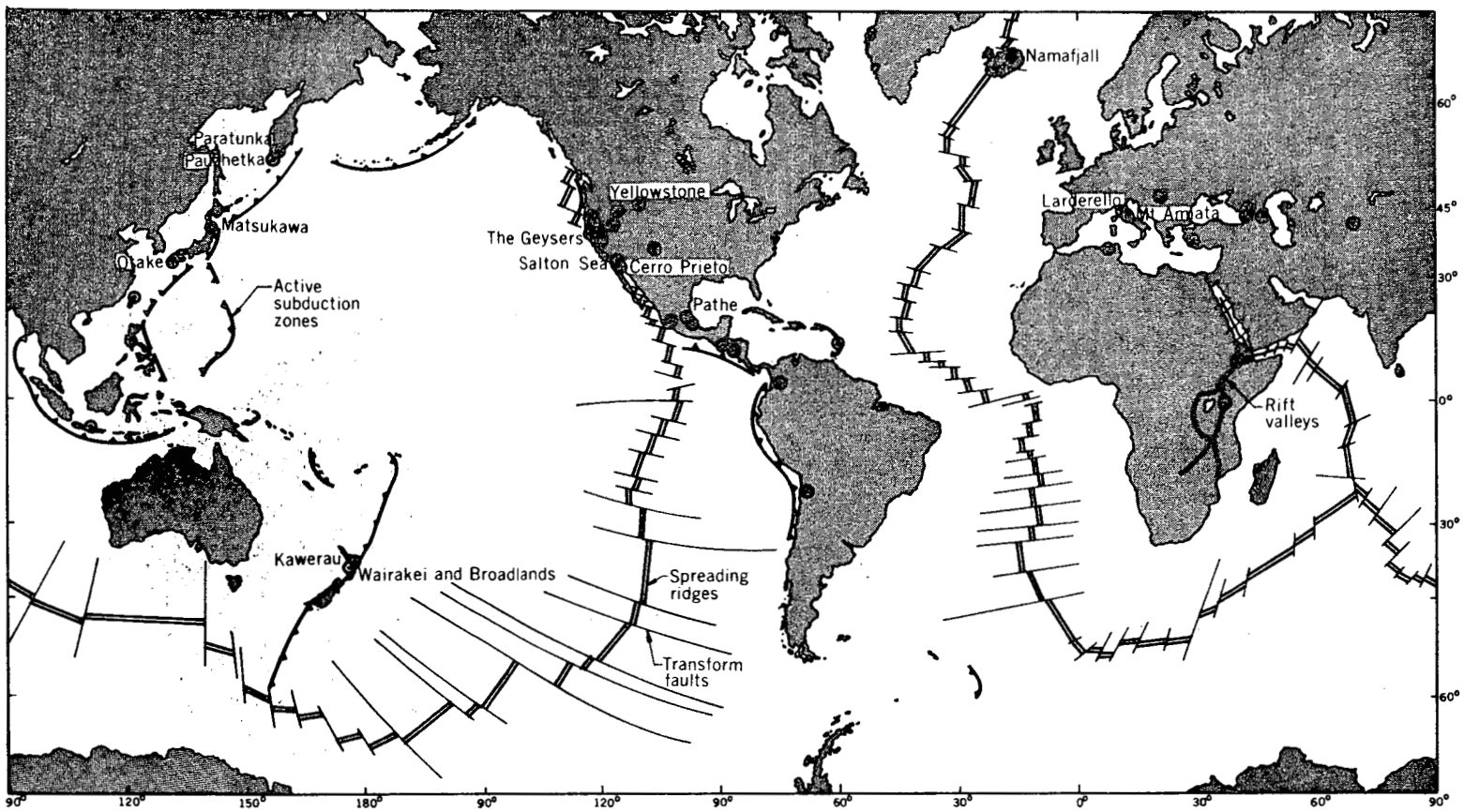

XBL 737 868

Fig. 1 The major fault zones of the earth and the associated areas of geothermal activity.

Fig. 2. **MAP OF THE UNITED STATES SHOWING LOCATION OF PROMINENT HOT SPRINGS**
(U.S.G.S. Water Supply Paper 836-D)

XBL 764-1154

TWO-STAGE FLASHED STEAM ENERGY CONVERSION PROCESS

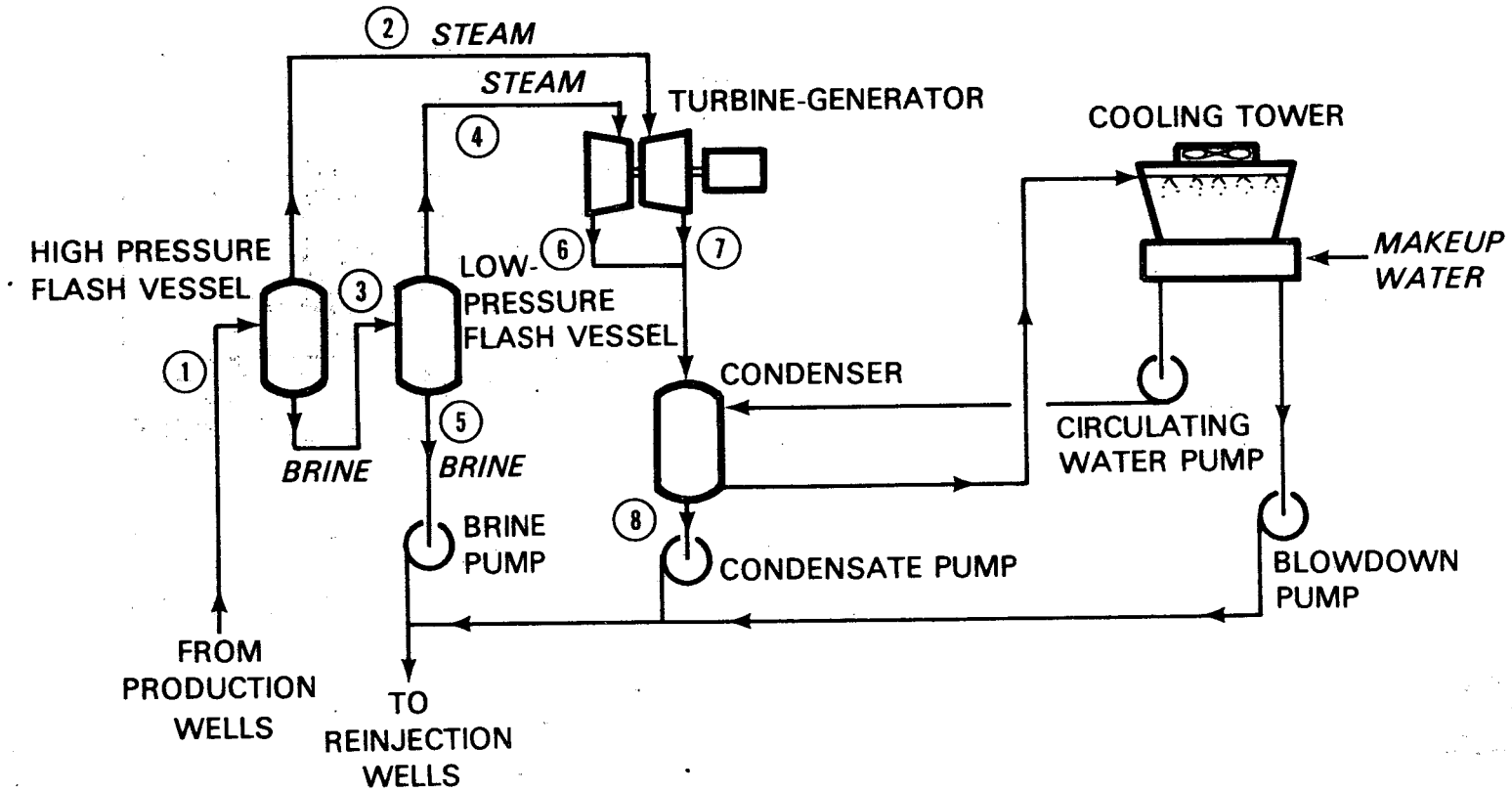

XBL 784-636

Fig. 3 Diagram of a two-stage flashed steam geothermal power plant.

BINARY ENERGY CONVERSION PROCESS

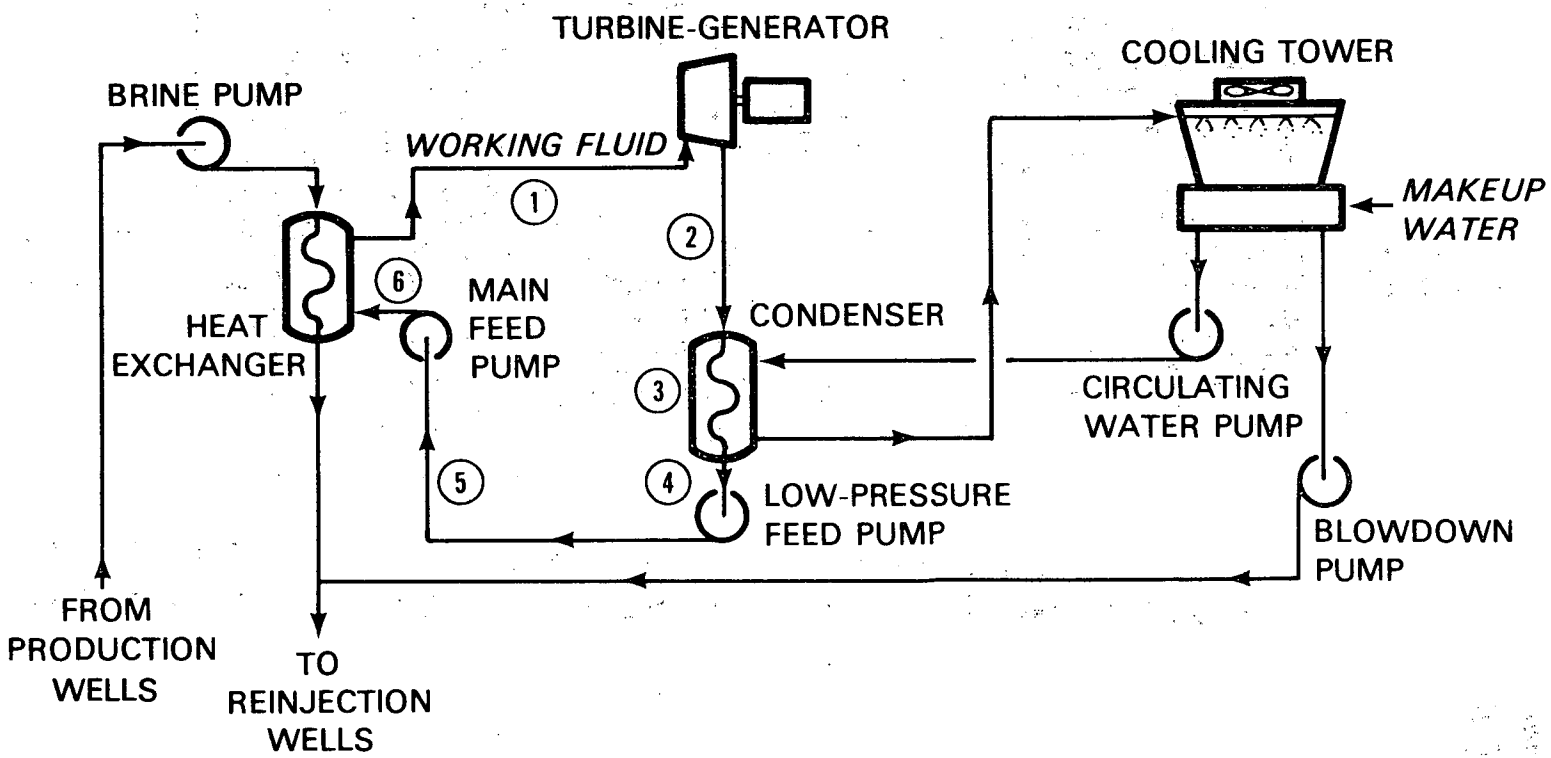

Fig. 4 Diagram of the binary cycle process for electrical energy production from geothermal fluid.

XBL 784-635

This report was done with support from the Department of Energy. Any conclusions or opinions expressed in this report represent solely those of the author(s) and not necessarily those of The Regents of the University of California, the Lawrence Berkeley Laboratory or the Department of Energy.

TECHNICAL INFORMATION DEPARTMENT
LAWRENCE BERKELEY LABORATORY
UNIVERSITY OF CALIFORNIA
BERKELEY, CALIFORNIA 94720