Submitted to Nuclear Physics B

LBL-8963 c.2
Preprint

FINITE TEMPERATURE BEHAVIOR OF THE LATTICE ABELIAN HIGGS MODEL

RECEIVED
LAWRENCE
BERKELEY LABORATORY

MAY 9 1979

LIBRARY AND
DOCUMENTS SECTION

Thomas Banks and Eliezer Rabinovici

January 1979

Prepared for the U. S. Department of Energy
under Contract W-7405-ENG-48

TWO-WEEK LOAN COPY

This is a Library Circulating Copy which may be borrowed for two weeks. For a personal retention copy, call Tech. Info. Division, Ext. 6782

LAWRENCE BERKELEY LABORATORY
UNIVERSITY OF CALIFORNIA
BERKELEY

LBL-8963 c.2

DISCLAIMER

This document was prepared as an account of work sponsored by the United States Government. While this document is believed to contain correct information, neither the United States Government nor any agency thereof, nor the Regents of the University of California, nor any of their employees, makes any warranty, express or implied, or assumes any legal responsibility for the accuracy, completeness, or usefulness of any information, apparatus, product, or process disclosed, or represents that its use would not infringe privately owned rights. Reference herein to any specific commercial product, process, or service by its trade name, trademark, manufacturer, or otherwise, does not necessarily constitute or imply its endorsement, recommendation, or favoring by the United States Government or any agency thereof, or the Regents of the University of California. The views and opinions of authors expressed herein do not necessarily state or reflect those of the United States Government or any agency thereof or the Regents of the University of California.

January, 1979

FINITE TEMPERATURE BEHAVIOR OF THE LATTICE ABELIAN HIGGS MODEL

by Thomas Banks*
Institute for Advanced Study
and Dept. of Physics and Astronomy Tel Aviv University†

and

Eliezer Rabinovici**
Lawrence Berkeley Laboratory
and Dept. of Physics Hebrew University of Jerusalem‡

* Supported in part by U.S. Israel Binational Science Foundation (BSF) Jerusalem, and in part by the Dept. of Energy under Grant #EY-76-S-02-2220

† Permanent address

‡ " "

** Work supported in part by the High Energy Physics Division of the US Dept. of Energy.

Abstract

We study phase transitions in the lattice version of the Abelian Higgs model - a model which can exhibit both spontaneous symmetry breaking and confinement. When the Higgs charge is the basic U(1) unit we find that the Higgs and confinement regions are not separated by a phase transition and form a single homogenous phase which we call the Total Screening phase. The model does not undergo a symmetry restoring phase transition at finite temperature.

If the Higgs charge is some multiple of the basic unit the model follows the conventional wisdom: there are 3 phases (normal, Higgs and confinement) at zero temperature, two of which disappear above some critical point. We apply the lessons learned from the lattice Higgs model to understand the behavior of the weak interactions at high temperature.

In a long appendix we give an intuitive physical picture for the Polyakov-Susskind quark liberating phase transition and show that it is related to the Hagedorn spectrum of a confining model. We end with a collection of effective field theory approximations to various lattice theories.

I. Introduction

Early work on gauge theories at finite temperature[1] was devoted primarily to the study of weak interactions. It was argued that above a critical temperature, weak interaction symmetry breaking would disappear and the gauge bosons would become massless.

This picture of "symmetry restoration" when combined with the current folklore of confinement in non-abelian gauge theories appears to lead one to the strange conclusion that electrons and neutrinos should be "confined" at high temperature. Recently, however, Polyakov[2] and Susskind[3] have shown that confinement itself disappears at high temperature. A naive analysis would then lead us to believe that the fate of weak interactions at high temperature depends on the relative sizes of the critical temperatures for symmetry restoration and "deconfinement."

In this paper we will investigate the interrelations between the Higgs mechanism and confinement in the simplest model which exhibits both phenomena; the Abelian Lattice Higgs model in four dimensions. We will find that all of the naive arguments cited above are totally misleading.

A proper understanding of the finite temperature behavior of the Higgs model hinges on a reinterpretation of the physics of the model at zero temperature. In particular we will show that the zero temperature phase diagram of the model depends crucially on the charge q of the Higgs field. If q = 1 (the fundamental

representation of U(1)) there are only two phases at zero temperature. The first is a "normal" phase with a massless photon. The second phase extends from the region of couplings where we expect that the Higgs mechanism should be operative (small electric charge; large classical vacuum expectation value of the Higgs field) into the region where we expect confinement. Thus two apparently different phases are analytically connected. We call this Higgs + Confinement region the Total Screening (TS) phase.

The analytic connection between the "Higgs" and "confining" regions of the TS phase indicates that all physical particles in the Higgs region are U(1) singlets. We will later argue by analogy that the electron and neutrino in the Weinberg-Salam model are actually $SU(2)_L$ singlets, [1] thus solving the "paradox" mentioned above.

If the Higgs charge q is not equal to one then the Higgs model has (as one would naively expect) three phases at zero temperature, a normal phase, a confined phase and a Higgs phase. The transition between confined and Higgs phases is associated with the breakdown of a certain Z_q symmetry.

For $T \neq 0$ the $q = 1$ model has no phase transition either out of the normal or the TS phase. We conjecture however that the transition (in coupling constant space) between these two phases disappears above some finte T.

The behavior of the $q \neq 1$ models is totally different. Both

the Higgs and confined phases undergo transitions to a plasma phase above some critical temperature.

The plan of this paper is as follows. In section II we study the 4 dimensional Higgs model and demonstrate the phenomena discussed above. We use the method of duality transformations which has been applied to the zero temperature Higgs model by Einhorn and Savit.[4] Our T = 0 results should be compared to theirs. Section III is devoted to the Weinberg-Salam model. We use analogies to the q = 1 Higgs model and some unpublished arguments of Susskind [1], to elucidate the high temperature behavior of this model. In a long appendix we give a new physical interpretation of the work of Polyakov[2] and Susskind[3] on deconfinement at finite temperature and relate it to the Hagedorn[5] spectrum and some old work of Cabibbo and Parisi.[6] We end up with a detailed list of field theories approximating lattice gauge theories at both zero and non-zero temperatures.

Our discussion of the existence of the TS phase in the q = 1 Higgs model is not particularly rigorous. However, Fradkin and Shenker[7] have used the methods of Osterwalder and Seiler[8] to prove the absence of a transition between the "Higgs" and "confined" phases in a rather general lattice gauge theory with Higgs fields in the fundamental representation of the gauge group.

II. The Four Dimensional Abelian Lattice Higgs Model

A. Zero Temperature.

The Euclidean action for the model that we will be studying is

$$S = -\frac{1}{e^2}\sum_{\bar{x},\mu,\nu}(\cos\theta_{\mu\nu}(\bar{x})-1)-f^2\sum_{\bar{x},\mu}(\cos(\Delta_\mu\chi(\bar{x})-q\theta_\mu(x))-1) \qquad (1)$$

θ_μ is the angle valued U(1) gauge field, and $\theta_{\mu\nu}$ its lattice curl. χ is the phase of the Higgs field, whose magnitude has been frozen at f. q, a positive integer is the Higgs charge in units of the fundamental U(1) charge.

We would like to stress the analogy between (1) and the action for a two component Heisenberg ferromagnet (O(2) non-linear σ model)

$$S_m = -\beta \sum_{x,\mu} \cos\Delta_\mu \phi(x) - h \cos q\phi(x) \tag{2}$$

If we define the variable $\phi_\mu = \theta_\mu - \frac{1}{q}\Delta_\mu\chi$ we see that S is a sort of generalization of S_m to tensors of one higher rank. For q = 1 (2) is a ferromagnet is a constant external field and is known[9] not to have a phase transition for finite non-zero β and h. We will see that the analogy between the two models is not exact, ((1) does have a transition) but is nonetheless instructive.

To analyze (1) we introduce Fourier transform variables via

$$e^{\frac{1}{e^2}(\cos\theta_{\mu\nu}-1)} = e^{-\frac{1}{e^2}} \sum_{\ell_{\mu\nu}} e^{i\ell_{\mu\nu}\theta_{\mu\nu}} I_{\ell_{\mu\nu}}\left(\frac{1}{e^2}\right) \tag{3}$$

$$e^{f^2(\cos(\Delta_\mu\chi - q\theta_\mu)-1)} = e^{-f^2} \sum_{\ell_{\mu\nu}} e^{i\ell_\mu(\Delta_\mu\chi - q\theta_\mu)} I_{\ell_\mu}(f^2) \tag{4}$$

We will also replace the Bessel functions in (3) and (4) by

$$I_\ell(z) \to e^z \; e^{-\frac{\ell^2}{2z}} \tag{5}$$

This replacement (valid as an approximation for small e^2 and large f)

defines the Periodic Gaussian (PG) or Villain[10] version of the Higgs model. The physics of the two models is similar and the PG version is easier to analyze.

We can now write the zero-temperature partition function of the PG model as

$$Z = \int \frac{d\theta_\mu}{2\pi} \frac{d\chi}{2\pi} e^{-s} = \sum_{\ell_{\mu\nu}, \ell_\mu} e^{-\frac{e^2}{2}\Sigma \ell_{\mu\nu}^2} e^{-\frac{1}{2f^2}\Sigma \ell_\mu^2} \delta(\Delta_\mu \ell_\mu)\delta(\Delta_\nu \ell_{\mu\nu} - q\ell_\mu) \tag{6}$$

The δ symbols in (6) are products of Kronecker δ's of their arguments over all space time points and unsummed indices. They result from integration over θ_μ and χ.

We examine Z first in the limit $f^2 = \infty$. This extreme Higgs limit has been studied previously by Peskin[11] for a model in which θ_μ was a non-compact Abelian gauge field. He argued that in this case (which he called a Frozen Superconductor) there is a phase transition at a finite value of e^2 between Higgs and normal vacua. Naively then we would expect the same transition in the compact case followed by a transition to a confining phase at a larger value of e^2.

Our naive expectations are wrong however. If $q = 1$ and $f = \infty$ we can use the function in (6) to sum over ℓ_μ and obtain

$$Z = \left(\sum_{\ell=-\infty}^{\infty} e^{-\frac{e^2}{2}\ell^2} \right)^{6V} \tag{7}$$

The exact ground state energy density of the $f = \infty$ model is thus

$$F = -6 \ln \sum_{\ell=-\infty}^{\infty} e^{-\frac{e^2}{2}\ell^2} \tag{8}$$

It is analytic in a neighborhood of the positive e^2 axis, which indicates that this model has no phase transition.

The expansion of this free energy around $f = \infty$ is analogous to a large field expansion for the ferromagnet (2). Such expansions are known to have a finite radius of convergence. In fact, Fradkin and Shenker,[7] using techniques of Osterwalder and Seiler,[8] have proven the domain of analyticity shown in figure 1 for the free energy of an SU(2) lattice Higgs model with compact gauge group and Higgs field in the fundamental representation.

The absence of a transition between a "Higgs" and a "confining" phase in the $q = 1$ Higgs model can be partially explained by the observation that there is no order parameter which distinguishes these phases. We usually characterize the confining phase by the area law for Wilson's loop integral. For $q = 1$ however, any external charge can be screened by the quantized charges in the model and we expect perimeter falloff even in the confining phase. Similarly we can test for the exitence of a Higgs phase by finding an area law for the 't Hooft loop integral.[12][2]. This measures the force law between widely separated static monopoles of magnetic charge $\frac{2\pi}{e}$. But Compact QED contains quantized monopoles of precisely this strength[13,14] so the 't Hooft loop can be screened and will fall off according to a perimeter law even in the "Higgs" phase.

The absence of an order parameter means that we can find no Green's function whose large distance behavior is different in the two "phases." Thus the system can be placed in a finite volume without disturbing the physics, and finite volume systems have no transitions.

We can see the relation between the existence of order parameters and phase transitions by turning to the $q = 2$ model. Here the unit charged Wilson loop cannot be screened (if charge is a good quantum number). Furthermore, since the smallest electrical charge in the model is $2e$ we can introduce external monopoles with charge $\frac{\pi}{e}$ without violating the Dirac quantization condition. Such monopoles cannot be screened. We thus expect a transition in the $q = 2$ case even for $f^2 = \infty$.

In fact, if we take $f^2 \to \infty$ and $q = 2$ in (6) we can sum over ℓ_μ and obtain

$$Z = \sum_{\ell_{\mu\nu}} e^{-\frac{e^2}{2}\Sigma \ell_{\mu\nu}^2} \delta(\Delta_\nu \ell_{\mu\nu} \bmod 2) \tag{9}$$

We parameterize the constraint by introducing a two valued variable $\theta_\mu (= 0,\pi)$. Then

$$\begin{aligned} Z &= \tfrac{1}{2} \sum_{\ell_{\mu\nu}=-\infty}^{\infty} \sum_{\theta_\mu=0,\pi} e^{-\frac{e^2}{2}\Sigma \ell_{\mu\nu}^2} e^{i\Sigma \ell_{\mu\nu}\theta_{\mu\nu}} \\ &= \sum_{\ell_{\mu\nu}=0}^{\infty} \sum_{\theta_\mu=0,\pi} e^{-\frac{e^2}{2}\Sigma \ell_{\mu\nu}^2} \prod_{\mu,\nu,x} \cos \ell_{\mu\nu}(x)\theta_{\mu\nu}(x) \qquad (10) \\ &= \sum_{\theta_\mu=0,\pi} e^{a\Sigma\cos\theta_{\mu\nu}} e^{6bV} \end{aligned}$$

In (10) $\theta_{\mu\nu}$ is the curl of θ_μ and a and b are given by

$$a = \frac{1}{2} \ln \left(\frac{E+0}{E-0}\right) \tag{11a}$$

$$b = \frac{1}{2} \ln (E^2 - 0^2) \tag{11b}$$

and

$$E_0 = \sum_{\substack{\ell \text{ even} \\ \text{odd}}} e^{-\frac{e^2}{2}\ell^2} \tag{11c}$$

Up to a multiplicative constant then Z is the partition function of a Z_2 lattice gauge theory. The Z_2 gauge theory is known[15] to have a single finite temperature phase transition. The two phases are separated by the behavior of the Wilson loop.

This reasoning extends to all $q > 1$. The $f = \infty$ charge q Higgs model is equivalent to a Z_q gauge theory. (more precisely, eq. (9) is equivalent also to the Villain Z_2 gauge theory, for $q > 2$ eq. (9) gives the Villain Z_q gauge theory). However, for sufficiently large q the Z_q theory actually has three phases, one of which contains a massless photon.[16]

To understand the qualitative nature of the phase diagram of the Higgs model for finite f we return to equation (6) and apply the techniques of reference (13) to obtain the following form for the partition function

$$Z = \sum_{m_\mu, \ell_\mu} \delta(\Delta_\mu m_\mu)\delta(\Delta_\mu \ell_\mu) \begin{cases} e^{-\frac{1}{2}(\frac{2\pi}{e})^2 \Sigma m_\mu(r) D(r-r') m_\mu(r')} \\ e^{-\frac{1}{2}(qe)^2 \Sigma \ell_\mu(r) D(r-r') \ell_\mu(r')} \\ e^{2\pi i \Sigma m_\mu \varepsilon_{\mu\nu\lambda\kappa} n_\nu (n\cdot\Delta)^{-1} D\Delta_\lambda \ell_\kappa} \\ e^{-\frac{1}{2f^2}\Sigma \ell_\mu^2} \end{cases} \tag{12}$$

where n_ν is an arbitrary unit vector and

$$- \Delta^2 D(r-r') = \delta r,r' \tag{13}$$

Equation (12) describes a field theory of spin zero charges interacting with spin zero monopoles via a noncompact gauge field. The electric charges have a mechanical bare mass and short range repulsive interactions, both proportional to $\frac{1}{f^2}$.

To see this we can use the exact transformations of Peskin[11] or the more intuitive (but less correct) arguments of Stone and Thomas and Forster.[17]

These arguments proceed by writing (12) in terms of a non-compact abelian gauge field[18]

$$Z = \int dF_{\mu\nu} dA_\mu \delta(\Delta_\mu A_\mu)\, e^{-\Sigma F_{\mu\nu}^2} \sum_{m_\mu, \ell_\mu} \delta(\Delta_\mu m_\mu)\delta(\Delta_\mu \ell_\mu)$$

$$\times\, e^{\frac{i}{\sqrt{2}} \Sigma F_{\mu\nu}(\partial_\mu A_\nu - \partial_\nu A_\mu - \frac{2\pi}{e} \varepsilon_{\mu\nu\lambda\kappa} n_\lambda (n\cdot\Delta)^{-1} m_\kappa)} \tag{14}$$

$$\times\, e^{i\Sigma A_\mu q e \ell_\mu}\, e^{-\frac{1}{2f^2}\Sigma \ell_\mu^2}.$$

The sums over ℓ_μ and m_μ can now be done for fixed A_μ. We do the sum over ℓ_μ first. A sum over a conserved integer valued current can be thought of as a sum over closed random walks with the following provisos which eliminate double counting:

1) We must eliminate walks that backtrack.

2) L step walks are weighted by $\frac{1}{L}$ since two walks which tread over the same path generate the same current. The current of a walk is

$$\ell_\mu(x) = \sum_{L=1}^{N} [x_\mu(L)-x_\mu(L-1)]\,\delta(x-x_\mu(L)) \tag{15}$$

3) The sum over disconnected walks does not exponentiate the connected sum since configurations in which two disconnected walks overlap give the same current as a connected link.

The authors of ref. (17) ignore constraints (1) and (3). They also approximate the self-action term and assume it is proportional to the length of the walk. For the Higgs field this self energy has a $\frac{1}{2f^2}$ component and another component from the short-distance electromagnetic interaction of a single loop, this is $\frac{1}{2}\, q^2 e^2\, D(0)$. For the monopole loops only the electro magnetic term exists and it is $\frac{1}{2}(\frac{2\pi}{e})^2\, D(0)$. For brevity we will denote this term by $\exp(-\frac{1}{2f^2}\, L)$ in the following treatment

Then they define

$$K(x,x',L) = \sum_{\substack{\text{all L step}\\ \text{walks going}\\ \text{from x to x'}}} e^{-\frac{1}{2f^2} L} e^{i \sum_{N=1}^{L} qeA_\mu(x(N))(x_\mu(N)-x_\mu(N-1)} \tag{16}$$

K satisfies a recursion relation

$$K(x,x',L) = O\, K(x,x',L-1) \tag{17}$$

with O a certain finite difference operator.

Also note that

$$K(x,x',0) = \delta x,x' \tag{18}$$

The sum that we want to evaluate is just

$$e^{\sum_{L=1}^{\infty} \frac{1}{L} \sum_x K(x,x,L)} \tag{19}$$

$$= \exp \sum_{L=1}^{\infty} \frac{1}{L} \operatorname{tr} 0^L = \exp - \operatorname{tr} \ln(1-0)$$

$$= \det{}^{-1} (1-0) \quad .$$

The authors of reference (17) show that the continuum limit of the operator (1-0) is just

$$\left(\frac{1}{i} \partial_\mu - qeA_\mu\right)^2 + \frac{e^{\frac{1}{2f^2} + \frac{1}{2}D(0)q^2e^2}-8}{a^2} \tag{20}$$

Writing the determinant in terms of a functional integral over a complex scalar field we see that we have a Higgs model as claimed.

The loops of electric charges are thus described by a complex scalar field of bare mass m_e^2, where $a^2 m_e^2$ equals the term $\exp(\frac{1}{2f^2} + \frac{1}{2}D(0)q^2e^2) - 8$. In a similar manner one derives that the loops of magnetic monopoles are described by a complex scalar field of bare mass m_m^2, where m_m^2 is given by $\exp(\frac{1}{2f^2})-8$. The repulsive self interactions necessary to stabilize (20) when $\frac{1}{2f^2} < \ln 8$ are supplied by provisos 1 and 3 and the current-current interaction in (14).

We can easily imagine three possible phases for model in (14) at zero temperature.

I. A "normal" phase with no large fluctuations of either electric or magnetic charge. The photon will have zero mass in this phase. The Wilson loop will fall off like the circumference with non-leading "Coulomb" corrections.

II. An electricially superconducting phase with large electric charge fluctuations and a massive photon. Magnetic charges will be confined by linear force laws (but the linear force between external monopoles will be screened at large distances by monopole pair creation). The Wilson loop will fall off like the circumference with Yukawa corrections.

III. The magnetic analog of II. The photon still acquires a mass but this time through its covariant derivative coupling to the magnetic monopoles. If $q \geq 2$ the linear force between odd integer valued external charges will not be screened and the appropriate Wilson loop will fall off like the area.

The existence of phase II is inferred from the small e, large f coupling of the theory and that of phase III from the large e behavior: in both cases the semiclassical arguments are appropriate. The proof of the existence of the normal phase needs to be strengthened, this has been done for large q and f. For the $q = 1$ case, one can't probe the system semi-classically. For small values of q it also turns out that it is possible for both masses to be negative. When $f \to \infty$ one can show, using self-duality, that this does not result in a new phase, but rather is part of the Higgs phase.

For large f we would expect to be in either phase II or phase III depending on the value of e^2. What we have shown above is that if $q = 1$ there is actually no transition between these two "phases." All physical quantities (and their coupling constant derivatives) vary continuously as a function of e^2. For $q \geq 2$ there is a transition at large f and we can verify that the large (small) e^2 phase is phase III (II) by calculating the Wilson loop as has been done by Einhorn and Savit.[4]

We can find the critical value of e^2 for $f = \infty$ by noting that in this limit the partition function [12] is symmetric under interchange of ℓ_μ and m_μ. This means that

$$Z(e^2, f=\infty) = Z\left(\frac{4\pi^2}{q^2 e^2}, f=\infty\right) \tag{21}$$

For $q = 1$ this relation is satisfied by our exact expression

for Z, equation (7) (apply the Poisson sum formula!). For $q = 2$ we know there is a single finite e^2 transition so it must be given by the fixed point of (21)

$$e_c^2(\infty) = \frac{2\pi}{q}$$

The key to determining the nature of the phase diagram for small f is the question of the existence of a region of normal phase. We now show that such a region exists for sufficiently small e^2 and f.

The leading behavior of the Wilson loop for small e^2 and f is obtained by ignoring all monopoles and all Higgs currents. It is simply

$$-\frac{e^2}{2} \sum_{r,r'} J_\mu(r)\, D(r-r')\, J_\mu(r') \tag{22}$$

where J_μ is the current along the loop.
This indicates the existence of a massless photon but we must be more careful and show that the corrections to [22] for small but finite e^2 and f do not generate a small mass. The leading corrections are obtained by allowing Higgs and monopole currents of strength ± 1 which flow around a single box on the lattice. That is we allow currents of the form

$$\begin{aligned} \ell_\mu(x) = m_\mu(x) &= \delta_{\mu\lambda}\delta_{x,x_0} + \delta_{\mu\kappa}\delta_{x,x_0} + \hat{\lambda} - \delta_{\mu\lambda}\delta_{x,x_0} + \hat{\kappa} \\ &\quad - \delta_{\mu\kappa}\delta_{x,x_0} \\ &= (\delta_{\mu\kappa}\Delta_\lambda - \delta_{\mu\nu}\Delta_\kappa)\ \delta_{x,x_0} \end{aligned}$$

$$\equiv D_{\mu\nu}\Delta_\nu \delta x, x_0 \tag{23}$$

$$D_{\mu\nu} = (\delta_{\mu\kappa}\delta_{\nu\lambda} - \delta_{\nu\kappa}\delta_{\mu\lambda}) \tag{24}$$

This is the current of a four dimensional Euclidean "magnetic" dipole. In three dimensional language it has four possible interpretations. First suppose J_μ is an electric current. If λ,κ are both spatial indices this is a static magnetic dipole, if one is a time index J_μ represents the history of an electric pair creation and reannihilation. If J_μ is a magnetic current there is a dual interpretation.

We can now proceed in imitation of Polyakov and construct an effective Lagrangian for the interaction of the electromagnetic field with a gas of dipole loops. If we ignore the effective repulsive interactions between oppositely oriented loops which must be included to avoid double counting it is easy to construct such a Lagrangian. It has the form

$$\mathscr{L} = -\frac{1}{4e^2} F_{\mu\nu}{}^2 + G(F_{\mu\nu}{}^2) \tag{25}$$

where G is a local function whose precise structure does not concern us here. The important point is that it is a function only of $F_{\mu\nu}$ and thus contains only a renormalization of e^2 and derivative couplings. It cannot produce a mass for the photon. The Higgs effect and/or Debye screening can occur only in the presence of electric or magnetic monopole sources for the

electromagnetic field [3].

We are now in a position to give a qualitative description of the zero temperature phase diagram of the Higgs model. Fix f and define $e_1^2(f)$ as the coupling below which phase III ceases to exist and $e_2^2(f)$ as the coupling above which phase II disappears.

For f< some f_c we know that $e_2^2(f) = 0$ identically for even in the e = 0 model there is no condensation of the Higgs field below f_c. $e_1^2(0)$ is however known to be nonzero and was calculated approximately in ref. 13.

How will the couplings evolve as f increases? Consider first $e_1^2(f)$. Turning on f implies introducing charged scalar particles into the theory. These will inevitably polarize the vacuum and reduce the effective value of e^2. This effect increases with increasing f. This means that the effective monopole coupling is strengthened and therefore the monopole self energy is raised. The transition between phase I and III occurs when the renormalized mass of the monopole (the mass relevant for travelling many lattice spacings) goes to zero. An enhanced self energy pushes up the renormalized mass. Thus, to get back to the transition point we must reduce the self energy by increasing the bare e^2. We therefore expect $e_1^2(f)$ to be a monotonically increasing function of f.

To understand the behavior of $e_2^2(f)$ it is best to think of how f would change as a function of e^2. First consider the pure electric super conductor without monopoles. Increasing e^2

increases the self energy of the Higgs particle and works against condensation as before. Thus f must be increased with e^2 to stay on the phase transition line. The primary effect of reintroducing monopoles will be to push up the effective value of e^2 (by screening $\frac{1}{e^2}$), making the curve for $f_c(e^2)$ steeper. We conclude that $e_2{}^2(f)$ is also a monotonically increasing function of f.

At this point our discussions of charge one and charge two fields diverge from each other. For q = 1 we have argued that above some finite value of f the system has no phase transitions. A phase diagram compatible with this picture is shown in figure 2. For q = 2 all we know is that $e_1{}^2(\infty) = e_2{}^2(\infty) = \pi$. We believe that the normal phase will in fact be absent for a finite range of $\frac{1}{f}$ around $\frac{1}{f} = 0$. The phase diagram would then look like figure 3. Of course the line AB on this diagram might be of zero length.

The transitions at $e_1(0)$ is thought to be second order[11] and that at $e_2(f_c)$ is known to be. The second of these is however unstable against addition of a noncompact electrodynamic coupling[19] and becomes first order when such a coupling is introduced. Compact electrodynamics differs from noncompact electrodynamics at low e^2 only by the inclusion of very heavy magnetic monopoles. Peskin[20] has argued that the first order nature of the superconductor transition is due to the change in the number of degrees of freedom of the photon when it acquires

a mass. This is unaffected by the inclusion of monopoles so we expect the lower line in figures 2 and 3 to be a line of first order transitions.

On the other hand we have already argued that for small f the major effect of the Higgs field is a renormalization of e^2. Thus the transition at $e_1^2(0)$ is stable and the upper line in figures 2 and 3 is a line of second order transitions.

The nature of the line AB in figure 3 is a bit more problematical. To see what is at issue let us take q sufficiently large that we have two transitions in the $f = \infty$ model.[16] The phase diagram will then look like figure 4.

The pair of transitions at $f = \infty$ are both expected to be second order.[11] However the lower line of transitions is first order for finite non-zero f while the upper line remains second order (it represents transitions from a magnetic superconductor phase with $f_{magnetic} = \infty$ into the normal phase). By the time q gets to two these two lines coincide along the range AB and it is not clear what the order of the transition is. Of course, if AB has zero length we are spared this question.

B. Finite Temperature.

The finite temperature behavior of a system can be studied in the path integral formalism by restricting the length of the time axis to an interval of length $\frac{1}{T}$. Equation (7) for the partition function of the $q = 1$ $f^2 = \infty$ Higgs model is an analytic function of the volume of the lattice and thus of the temperature.

This indicates that the $f^2 = \infty$ model has no phase transitions

as a function of the temperature but the argument is not completely convincing since our time axis is discrete. We therefore turn to a continuous time, Hamiltonian formulation of the theory. The Hamiltonian for the $q = 1$ Higgs model in the $\theta_o = 0$ gauge is:

$$H = -\frac{e^2}{2}\sum\frac{\partial^2}{\partial\vec{\theta}^2} - \frac{1}{2e^2}\sum\cos(\Delta x\vec{\theta}) - \frac{1}{2f^2}\sum\frac{\partial^2}{\partial\chi^2} - \frac{f^2}{2}\sum\cos(\Delta_i\chi-\theta_i) \tag{26}$$

Physical states are constrained by

$$(\Delta\cdot\frac{\partial}{\partial\vec{\theta}} - \frac{\partial}{\partial\chi})|\psi> = 0 \tag{27}$$

Alternatively we can make the standard change of variables (Stueckelberg transformation)

$$\begin{aligned}\vec{B} &= \vec{\theta} - \vec{\Delta}\chi \\ \phi &= \chi\end{aligned} \tag{28}$$

Then (26) and (27) become

$$-\frac{e^2}{2}\sum\frac{\partial^2}{\partial\vec{B}^2} - \frac{1}{2e^2}\sum\cos(\vec{\Delta}x\vec{B}) - \frac{1}{2f^2}\sum(\vec{\Delta}\cdot\frac{\partial}{\partial\vec{B}} - \frac{\partial}{\partial\phi})^2 - \frac{f^2}{2}\sum\cos\vec{B} \tag{29}$$

and

$$\frac{\partial}{\partial\phi}|\psi> = 0 \tag{30}$$

Thus we can study

$$H = -\frac{e^2}{2}\sum\frac{\partial^2}{\partial\vec{B}^2} - \frac{1}{2e^2}\sum\cos(\vec{\Delta}x\vec{B}) - \frac{1}{2f^2}\sum(\vec{\Delta}\cdot\frac{\partial}{\partial B})^2 - \frac{f^2}{2}\sum\cos\vec{B} \tag{31}$$

with no constraints.

The TS phase exists whenever e^2 or f^2 is large. To study finite temperature behavior we break this region up into three

a) $e^2 >> 1$ $f^2 << 1$: In this region we can drop the two cosine terms in (31) and obtain a model studied by Susskind.[3] He showed that the partition function of this model was equivalent to that of an xy ferromagnet in an external field. The ferromagnet has no phase transitions.

b) $e^2 >> 1$ $f^2 >> 1$: The operator $\sum(\vec{\Delta}\cdot\partial/\partial B)^2$ is not bounded, but it is relatively bounded[21] by $\sum \partial^2/\partial\vec{B}^2$ thus for large f^2 we can drop it from the Hamiltonian. Similarly, the $\sum \cos\vec{\Delta}\times\vec{B}$ term can be dropped for large e^2. Thus the Hamiltonian is approximately

$$H \simeq -\frac{e^2}{2}\sum\frac{\partial^2}{\partial\vec{B}^2} - \frac{f^2}{2}\sum\cos\vec{B} \tag{32}$$

and

$$\mathrm{tr}\, e^{-\beta H} = (\mathrm{tr} e^{-\beta h})^{3V} \tag{33}$$

where h is the one-dimensional quantum mechanical Hamiltonian:

$$h = -\frac{e^2}{2}\frac{\partial^2}{\partial\theta^2} - \frac{f^2}{2}\cos\theta \tag{34}$$

The free energy density

$$F = -\frac{1}{\beta V}\ln \mathrm{tr}[e^{-\beta H}] = -\frac{3}{\beta}\ln \mathrm{tr} e^{-\beta h} \tag{35}$$

is clearly an analytic function of β.

c) $e^2 << 1$ $f^2 >> 1$: This is the most difficult region to analyze as well as the most interesting. The potential terms in

the Hamiltonian (31) are very large and we can perform a semi-classical analysis. All the minima of the potential are of the form

$$\vec{B} = 2\pi\vec{m}$$

and are related to $\vec{B} = 0$ by the periodic shifts which are symmetries of the Hamiltonian. This means that we can include all minima by expanding only around $\vec{B} = 0$ but considering periodic wave functions.

We can enforce periodicity by writing the partition function as:

$$Z = \sum_{\vec{p},\vec{q}} \int d\vec{B} \langle \vec{B} + 2\pi\vec{p} \,|e^{-\beta H}|\, \vec{B} + 2\pi\vec{q}\rangle \tag{36}$$

$\vec{B}$ can now be considered a noncompact variable. Apart from an infinite constant (36) is equivalent to:

$$Z = \sum_{\vec{m}} \int d\vec{B}(x) \; \langle \vec{B}+2\pi m \,|e^{-\beta H}|\, \vec{B} \rangle \tag{37}$$

where we have used the periodicity of H.

At this point we can make our semiclassical approximation by expanding H around $\vec{B} = 0$:

$$H \simeq \sum - \frac{e^2}{2} \frac{\partial^2}{\partial \vec{B}^2} - \frac{1}{2f^2}(\vec{\Delta}\cdot\frac{\partial}{\partial\vec{B}})^2 + \frac{1}{2e^2}(\vec{\Delta}x\vec{B})^2 + \frac{f^2}{2}\vec{B}^2 \tag{38}$$

Using a Euclidean path integral formalism we can rewrite (37) as

$$Z = \sum_{\vec{m}} \int_{\substack{\text{all paths from} \\ \vec{B} \text{ to } \vec{B} + 2\pi\vec{m}}} d\,\vec{B}(x,t) \quad e^{-\int_0^\beta L dt} \tag{39}$$

where L is the Euclidean Lagrangian for H. L is quadratic in $\vec{B}$ and its derivatives.

Now let $\vec{B}_c^{\vec{m}}$ be the classical path that goes between 0 and $2\pi\vec{m}(x)$ in "time" β. Any path contributing to (39) can be written as

$$\vec{B} = \vec{B}_c^{\vec{m}} + \vec{B}_p \tag{40}$$

where $\vec{B}_p$ is periodic. Since $\vec{B}_c^{\vec{m}}$ is a stationary point and L is quadratic

$$\int_0^\beta L(\vec{B}) = \int_0^\beta L(\vec{B}_c^{\vec{m}}) + \int_0^\beta L(\vec{B}_p) \tag{41}$$

The integral over $\vec{B}_p$ can now be done. It contributes a factor to Z which is analytic in β and independent of $\vec{m}$. Thus any non-analyticity present resides in

$$\bar{Z} = \sum_{\vec{m}(x)} e^{-\int_0^\beta L(\vec{B}_c^{m})} \tag{42}$$

The Hamiltonian (38) can be written

$$H = \frac{1}{2}\,(p\ K\ p + B\ V\ B) \tag{43}$$

where p is the canonical momentum to B and K and V are given by

$$K_{ij} = e^2\delta_{ij} - \frac{1}{f^2}\,\Delta_i\Delta_j \tag{44}$$

$$V_{ij} = f^2\delta_{ij} + \frac{1}{e^2}(\Delta x \Delta x)_{ij} \tag{45}$$

Summations over spatial position and vector indices are implied in (43).

The Euclidean Lagrangian for (43) is

$$L = \frac{1}{2}\dot{B}\,K^{-1}\,\dot{B} + \frac{1}{2}\,BVB \tag{46}$$

It leads to the equations of motion

$$\ddot{B} = KVB \tag{47}$$

The solution satisfying $B(\vec{x},o) = 0$, $B(\vec{x},\beta) = 2\pi m(\vec{x})$ is:

$$B(x,t) = 2\pi\frac{\sinh(t\sqrt{KV})}{\sinh(\beta\sqrt{KV})}\,m \tag{48}$$

In (49) $\sqrt{KV}$ is an operator acting on m.

The classical action of this solution is

$$\int_o^\beta \frac{1}{2}\,\dot{B}K^{-1}\dot{B} + \frac{1}{2}BVB = \frac{1}{2}[BK^{-1}\dot{B}]_o^\beta - \frac{1}{2}\int_o^\beta (BK^{-1}\ddot{B} - BVB)$$

$$= \frac{1}{2}[BK^{-1}\dot{B}](\beta) = 2\pi^2\,m\,K^{-1}\sqrt{KV}\coth\beta\sqrt{KV}\,m \tag{50}$$

Returning to a more civilized notation

$$\overline{Z} = \sum_{\vec{m}(x)} e^{-2\pi^2 \sum_{\vec{x},\vec{y}} m_i(x)\,[K^{-1}\sqrt{KV}\,\coth\beta\sqrt{KV}]_{ij}(x-y)\,m_j(y)} \tag{51}$$

which is the partition function of a gas of dipoles interacting via a complicated temperature dependent potential.

A short calculation gives the explicit form of the operator in (51). We obtain

$$\overline{Z} = e^{-\sum_{\vec{x},\vec{y}} m_i(x)\,[D_1(x-y)(\delta_{ij}-\Delta_i\Delta_j/\Delta^2) + D_2(x-y)\Delta_i\Delta_j/\Delta^2]\,m_j(y)} \tag{52}$$

where

$$D_1(x) = \frac{1}{e^2} \int_{-\pi}^{\pi} \frac{d^3p}{(2\pi)^3} \sqrt{e^2f^2 + |\vec{K}^2(p)|} \coth\beta \sqrt{e^2f^2 + |\vec{K}^2(p)|} e^{-i\vec{p}\cdot\vec{x}} \tag{53}$$

$$D_2(x) \; f^2 \int_{-\pi}^{\pi} \frac{d^3p}{(2\pi)^3} \left(\sqrt{e^2f^2 + |\vec{K}^2(p)|}\right)^{-1} \coth\beta \sqrt{e^2f^2 + |\vec{K}^2(p)|} e^{-i\vec{p}\cdot\vec{x}}$$

$$K_i(p) = e^{ip_i} - 1$$

As long as $e^2f^2 > 0$ both D_1 and D_2 are short range and we can probably approximate them by their values at the origin. Then $\overline{Z}$ becomes

$$\overline{Z} = \sum_{m_i} e^{-A\Sigma m_i^2} e^{+B\Sigma \vec{m}(x)\cdot\vec{\Delta}^x \vec{m}(y)\cdot\Delta^x (1/\Delta^2)} \tag{54}$$

with

$$\begin{aligned} A &= D_1(o) \\ B &= D_1(o) - D_2(o) \end{aligned} \tag{55}$$

This is the partition function for a gas of dipoles.

A and B are both large ($\propto 1/e^2$) and positive. Furthermore $\coth\beta x$ is a monotonically decreasing function of β (for $x > 0$) blowing up like $1/\beta$ as $\beta \to 0$. Thus the effective density and temperature of our dipole gas are low when the real temperature is low ($\beta >> 1$) and they get lower as the real temperature is raised. There are to our knowledge no phase transitions in the dipole gas in this regime. It should be possible to prove this rigorously by showing that the low density expansion is convergent but we have not attempted to do so since the dipole gas is only a crude approximation to the Higgs model.

Our analysis may be questioned for very small values of e^2f^2 for there the range of D_1 and D_2 becomes very long. However, it is always true that we have a gas of objects (with complicated interactions) whose density is proportional to e^{-1/e^2} at low temperature and even smaller at high temperature. Furthermore the combination $D_1(p) - D_2(p)$ which multiplies the $1/p^2$ Coulomb singularity in (52) is not singular even when $e^2f^2 = 0$. Thus at worst the long distance behavior of the forces is like that in the three-dimensional Coulomb gas. We therefore expect that there will be no phase transition even for small e^2f^2.

A more serious problem is the question of whether our semi-classical approximation is sufficiently good to see a phase transition if one, in fact, exists. This is a very hard question to answer. However, we have convinced ourselves that an analogous treatment of the Higgs model with a non-compact electromagnetic field does show evidence of a transition. The transition appears to be associated with the condensation of Abrikosov flux tubes as was to be expected.

To summarize, we have shown (with varying degrees of rigor) that none of the coupling constant regions which comprise the TS phase of the $q = 1$ Higgs model has a phase transition at finite temperature. The reasons for this are probably the same as the reasons that the phase is homogeneous at zero temperature: the TS phase has no long range order which could be destroyed by thermal fluctuations.

The free photon phase of the $q = 1$ Higgs model also has no finite temperature transition. At any $T > 0$ it is a plasma of charges and monopoles. Both electric and magnetic fields are screened at large distances and the photon has a finite mass. It is probable that above some finite temperature the line of phase transitions between the TS and normal phases disappears, but we have no way of analyzing this or estimating the temperature.

The behavior of the charge two Higgs model is very different than that described above.

We will not be as careful in studying the $q = 2$ model as we were for $q = 1$. We first take the limit $f \to \infty$ obtain equation (10) and then pass to the time continuum limit. We obtain the Hamiltonian for the Z_2 lattice gauge theory first studied by Fradkin and Susskind[22]:

$$H = - \sum \sigma_i^1(x) - \lambda \sum \sigma_{ij}^3(x) \tag{56}$$

λ is a monotonically decreasing function of e^2. The operators σ_i^1, σ_i^2, and σ_i^3 on each link satisfy a Pauli algebra and

$$\sigma_{ij}^3(x) = \sigma_i^3(x)\sigma_j^3(x+\hat{i})\sigma_i^3(x+\hat{j})\sigma_j^3(x) \tag{57}$$

Simple analysis of the derivation of (10) shows that the study of the $q = 2$, $f = \infty$ Higgs model with external charge density $\rho(x)$ is equivalent to the study of (56) in the subspace:

$$[\prod_i \sigma_i^1(x)\sigma_i^1(x-\hat{i}) - \cos\pi\rho(x)]\ |\psi> = 0 \tag{58}$$

The free energy of a pair of unit charges separated by a distance R is given by

$$e^{-\beta F(R)} = \frac{\mathrm{tr}\ e^{-\beta H}(\delta(\rho(x) - \delta x,o + \delta x,R)}{\mathrm{tr}\ e^{-\beta H}\ \delta(\rho(x))} \tag{59}$$

We will study this in the strong coupling limit $\lambda << 1$. Then

$$e^{-\beta F(R)} = \frac{\mathrm{tr}\ e^{\beta\Sigma\sigma_i^1(x)} \prod_x \delta(\prod_i \sigma_i^1(x)\sigma_i^1(x+\hat{i}) - \cos\pi(\delta_{x,o}-\delta_{x,R}) \bmod 2)}{\mathrm{tr}\ e^{\beta\Sigma\sigma_i^1(x)} \prod_x \delta(\prod_i \sigma_i^1(x)\sigma_i^1(x+\hat{i}) \bmod 2)} \tag{60}$$

The constraints may be parameterized by writing $\sigma_i^1 = \cos\theta_i$ $(\theta_i=0,\pi)$ and introducing a two valued variable $\chi(x)$ $(= 0,1)$.

$$e^{-\beta F(R)} = \frac{\sum_{\theta_i=0,\pi} \sum_{\chi=0,1} e^{\beta\Sigma\cos\theta_i(x)}\ e^{i\Sigma\chi(x)(\Delta\cdot\theta(x)-\pi\delta_{x,o}+\pi\delta_{x,R})}}{\sum_{\theta_i=0,\pi} \sum_{\chi=0,1} e^{\beta\Sigma\cos\theta_i}\ e^{i\Sigma\chi\Delta\cdot\theta}} \tag{61}$$

We can now do the sum over θ_i. If we define $s = \cos\pi\chi$ it is

$$e^{-\beta F(R)} = \frac{\sum_{s=\pm 1} e^{a\sum_{x,i} s(x)s(x+i)}\ s(o)s(R)}{\sum_{s=\pm 1} e^{a\sum_{x,i} s(x)s(x+i)}} \tag{62}$$

with

$$a = \frac{1}{2}\ \ln\ \coth\ \beta \tag{63}$$

This is the spin correlation function of a three-dimensional Ising model. This is also the spin correlation function of the z(2) gauge theory in three dimensions. One can show in general that the temperature dependent partition function of the four dimensional, strongly coupled, Z_q lattice gauge theory is equivalent to the temperature zero generation function of the euclidean three dimensional Villain Z_q gauge theory which is equivalent in turn to the Villain three dimensional Z_q Ising-like model. Thus, for large q, our results go smoothly into the Polyakov-Susskind[2,3] result, which is the equivalence between partition function of strongly coupled compact QED and the x-y model. For our purposes it suffices to deal with the Z(2) model, we thus return to equation (63). For small a (large β, low temperature) it falls off exponentially and F(R) is linear in R.

For large a (high temperature)

$$e^{-F(R)} \to C_1 + C_2 e^{-mR} \tag{64}$$

Thus confinement disappears and is replaced by Debye screened photon exchange.[3] These $f = \infty$ results complement those of Susskind which are valid in the region $e^2 >> 1$ $f << 1$ and it is reasonable to assume similar behavior for the whole range of f as long as e^2 is sufficiently large.

We now wish to study the weak coupling limit $e^2 << 1$ $f = \infty$. For this purpose we will employ the duality transformation of Fradkin and Susskind. This dual transformation is applied in a spacelike axial gauge rather than the $A^o = 0$ gauge that we have been using so far. However, after the dual transformation we can bring the axial gauge Hamiltonian of Fradkin and Susskind back to the $A^o = 0$ gauge. The result is

$$H = \lambda \{ \sum_{\vec{x},i} \mu_i^1(x) - \frac{1}{\lambda} \sum_{\vec{x},i,j} \mu_{ij}^3(\vec{x}) \} \tag{65}$$

The relation between the μ_i's and the σ_i's of equation (56) is described in ref. (22). The Hamiltonian (65) has a local Z_2 gauge invariance and only states satisfying

$$\prod_i \mu_i^1(x) \; \mu_i^1(x-i) |\psi> = |\psi> \tag{65a}$$

are considered. This condition arises when we transform the axial gauge Hamiltonian into the $A^o = 0$ gauge. In the axial

gauge

$$\mu_3^3(x) = 1 \tag{66}$$

and equation (65a) is an operator identity. When we go to the $A^o = 0$ gauge we enlarge the space of states to include states which do not satisfy (66). This does not affect physics since any state violating equation (66) can be gauge transformed into one satisfying it. Equation (65a) however, is a gauge invariant equation. Thus the axial gauge and $A^o = 0$ Hamiltonians are equivalent only on the subspace of states satisfying (65a).

In view of our picture of the Z_2 gauge model as a limit of a Higgs model coupled to monopoles we expect an interpretation of equation (64) dual to that of equation (58). That is, we have the correspondence

$$\prod_i \mu_i^1(x)\ \mu_i^1(x+i) = \cos 2\pi(\rho_m^{(x)}) \tag{67}$$

where ρ_m is the monopole charge density measured in units of $2\pi/e$.

For $e^2 << 1$ λ is large and we can drop the second term of (65). The partition function in this approximation reduces again to that of an Ising model whose temperature is inversely related to that of the gauge model. Thus the $q = 2$ $f = \infty$ Higgs model has a finite temperature phase transition for small as well as large e^2.

The nature of the two transitions is quite different however. For large e^2 the transition is between a confining phase and a plasma phase. For small e^2 the spin correlation

function of the Ising model is related to the free energy difference between states satisfying (65a) and those which satisfy

$$\prod_i \mu_i^1(x)\ \mu_i^1(x-i) = \begin{cases} -1 & \text{if } x = 0 \text{ or } R \\ 1 & \text{otherwise} \end{cases} \tag{68}$$

According to (67) we can obtain such a state by adding an external monopole density

$$\rho_{ex}(x) = \frac{1}{2}\,[\delta_{\vec{x},o} - \delta_{\vec{x},\vec{R}}] \tag{69}$$

in units of $2\pi/e$. Such charge $1/2$ monopoles are allowed by the Dirac quantization condition because the smallest electric charge in the theory is $2e$.

Using the Ising model correspondence we find that the free energy difference between states with ρex and states without it is

$$e^{-\beta\Delta F(R)} \cong \begin{cases} C_1 + C_2\, e^{-\mu R} & \beta \to 0 \\ e^{-\mu R} & \beta \to \infty \end{cases} \tag{70}$$

This means that $1/2$ integral magnetic monopoles are confined for low temperature and small e^2 and unconfined for large temperatures. In addition, at high temperature static magnetic fields are screened. Clearly we are describing the transition from an electric superconductor to a plasma of magnetic and electric monopoles.

Let us summarize what we have learned about the Abelian Higgs model: (The reader should remember that the only statements that we have actually proven in this paper are those for the $f = \infty$ models.)

If the Higgs charge is 1 then the model has two phases at zero temperature, a normal phase with a massless photon and a total screening (TS) phase. The normal phase is separated from the TS phase by a line of phase transitions and disappears if either e^2 or f^2 is sufficiently large. The model has no phase transitions as a function of the temperature. We conjecture however that the line of transitions in coupling constant space disappears above some finite temperature.

If $q = 2$ there are three phases at zero temperature and our conjectured phase diagram is given in figure 4. As the temperature is raised the two superconducting phases (II and III) undergo phase transitions to a plasma state.

In the next section of the paper we will use the insights that we have gained to illuminate the problem of phase transitions in the Weinberg-Salam model.

IV. The Weinberg-Salam Model

The Weinberg-Salam model is an $SU_2 \times U_1$ gauge theory with Higgs particles in the fundamental representation of SU_2.

By analogy with the $q = 1$ Higgs model of the previous section we would expect that the "spontaneously broken" and confining phases of this theory are actually one and the same. In particular, we claim that the physical particles of the

"spontaneously broken" phase should be SU_{2_L} singlets. That this was in fact so was pointed out by L. Susskind several years ago. We repeat his arguments here (they have never been published) for two reasons. Firstly we feel that they are given new strength by our analysis of the Higgs model and secondly they set the stage for our discussion of the finite temperature behavior of the Weinberg-Salam model. The reader should also refer to the work of Fradkin and Shenker[7] for further discussion. Let us begin by ignoring the U_1 gauge fields for a moment. Then the Euclidean Lagrangian may be written

$$\mathscr{L} = + \frac{1}{4g^2} \operatorname{tr} F_{\mu\nu}^2 + |D_\mu(A)\phi|^2 + V(\phi^+\phi) \tag{71}$$

where A_μ is the usual antihermitian matrix valued gauge field and

$$F_{\mu\nu} = \partial_\mu A_\nu - \partial_\nu A_\mu + i[A_\mu, A_\nu] \tag{72}$$

$$D_\mu(A) = \partial_\mu 1 - A_\mu$$

Define

$$\phi(x) = \Omega(x) \begin{pmatrix} \rho(x) \\ 0 \end{pmatrix} \tag{73}$$

where ρ is real and Ω is an SU_2 matrix. (This decomposition is not unique. Choose one of the possibilities.)

Then

$$\mathscr{L} = \operatorname{tr} F_{\mu\nu}^2 + (\partial_\mu \rho)^2 + \rho^2 (D_\mu(A)\Omega^+\Omega\Omega^+ D(A)\Omega)_{11} + V(\rho^2) \tag{74}$$

where we have used

$$\Omega^+\Omega = 1$$
$$\Omega^+ D_\mu \Omega = - D_\mu \Omega^+ \Omega \tag{75}$$

and $(M)_{11}$ means 11 matrix element of M. If we now define

$$B_\mu = \Omega^+ D_\mu(A)\Omega \tag{76}$$

and notice that (since (76) has the form of a gauge transformation)

$$\mathrm{tr}\, F^2_{\mu\nu}(A) = \mathrm{tr}\, F^2_{\mu\nu}(B) \tag{77}$$

we can rewrite $\mathscr{L}$ as

$$\mathscr{L} = \mathrm{tr}\, F^2_{\mu\nu}(B) + (\partial_\mu \rho)^2 + \rho^2 (B^+_\mu B_\mu)_{11}$$
$$+ V(\rho^2) \tag{78}$$

Note that B_μ and ρ are invariant under (global or local) gauge transformations. The unitary gauge is defined by

$$\Omega(x) = 1 \tag{79}$$

and we recognize that the <u>gauge invariant SU_2 singlet</u> operators B_μ and ρ are equal to the gauge field A_μ and the residual Higgs field $\mathrm{Re}\phi_1$ in this gauge.

Nothing here depended very crucially on the fact that ϕ was in the fundamental representation. For any other representation the number of residual Higgs fields would be different as well as the mass spectrum of the B_μ fields. It would still be true that physical scalar and vector particles (i.e., the quanta of independent fields in the unitary gauge) would be SU_2 singlets since their interpolating fields are.

The difference between a fundamental Higgs and any other representation is that we can construct local singlet interpolating fields for any SU_2 representation. Consider, for example, the left handed electron-neutrino field

$$\psi_L = \binom{e_L}{\nu_L} \tag{80}$$

It appears in the Lagrangian in terms of the form

$$i\bar{\psi}_L \not{D} \psi_L + g\bar{\psi}_R \phi^+ \psi_L + h.c. \tag{81}$$

with $\bar{\psi}_R$ the right handed SU_2 singlet electron field. Defining a new field by

$$\chi_L(x) = \Omega^+(x) \psi_L(x) \tag{82}$$

this becomes

$$\bar{\chi}_L \, i \not{D} \chi_L + g\rho\bar{\psi}_R\chi_L^1 \tag{83}$$

The components of the singlet field χ_L can also be written

$$\chi_L^1 = \frac{1}{|\rho|} \phi_i^+ \psi_{iL} \tag{84}$$

$$\chi_L^2 = \frac{1}{|\rho|} \phi_i^+ \varepsilon_{ij} \psi_{jL} \tag{85}$$

In the unitary gauge $\chi^{1,2}$ become the physical electron and neutrino fields, so these particles too are singlets.

We have shown then that all the physical particles in the Weinberg-Salam model are SU_2 singlets and are therefore justified in saying that this model confines non-singlet representations of SU_2. Of course, to deduce the particle

spectrum we have had to do perturbation theory in the unitary gauge and this is justified only if the coupling is weak and $V(\rho^2)$ has a non-trivial minimum. But this is just the region where conventional wisdom would have us believe that $SU_L(2)$ is spontaneously broken and confinement disappears.

Can we now proceed by analogy with the $q = 1$ Higgs model and argue that the Weinberg-Salam model has no phase transitions as a function of its coupling constants? We believe that such a statement would be valid if there were no Fermions in the theory. In the presence of fermions, however, it is false.

The model now has an exact global symmetry which guarantees that the neutrino is massless. The persistence of this symmetry for all coupling values is in conflict with our picture of the states as singlets.

We have described the neutrino state as a "bound state" of an $SU_L(2)$ isospinor and the isospinor Higgs field. In the perturbative regime this bound state consists approximately of a single ψ_L quantum and a coherent state of the ϕ field and it is perfectly consistent to assume that it is massless.

Now, however, let us consider what happens as the parameters in the Higgs potential are changed so that the non-trivial minimum disappears and the coefficient of $\phi^+\phi$ becomes large and positive. A simple picture of the neutrino state in this regime would be a two body bound state of a ψ_L quantum (+ a sea of fermion pairs) and a heavy ϕ quantum. The mass of this state would go to infinity with the coefficient of $\phi^+\phi$ in the Lagrangian. But this is incompatible with neutrino

chirality conservation!

We can only guess at the resolution of this paradox since the regime in question lies far beyond the reach of our computational skills. We conjecture however that the paradox is resolved by spontaneous breakdown of neutrino chirality. This could occur as follows: combine the left handed neutrino and the right handed antineutrino into a Majorana field, and similarly the left handed electron and right handed positron. These then form an $SU(2)_L$ doublet Majorana field χ_i (this is possible because the conjugate of the fundamental representation of SU_2 is equivalent to the fundamental). We can then imagine a nontrivial expectation value for

$$\chi_i \varepsilon_{ij} \chi_j \tag{86}$$

If this scenario is correct then our picture of the neutrino state for large ϕ mass is consistent. The low lying spectrum in this region will consist of singlet bound states of the massive Majorana Fermion. The price that we have to pay for this pretty scenario is the existence of a phase transition to a regime with spontaneously broken neutrino chirality.

To end our discussion of the Weinberg-Salam model at zero temperature let us recall that up to this point we have been dealing with a mythical version of the theory with no $U(1)$ gauge bosons. The $U(1)$ gauge theory is non-compact and we should expect a first order phase transition to a regime in which the $U(1)$ symmetry is restored when the $U(1)$ coupling is large enough. However, if the $SU_2 \times U_1$ model is embedded

in a compact gauge group with Higgs bosons in the fundamental then the analogy with the $q = 1$ Higgs model should remain valid.

We come finally to the question which precipitated this investigation: the high temperature behavior of the weak interactions. As before be begin by setting the $U(1)$ coupling to zero. We have conjectured that the zero temperature SU_{2_L} gauge theory with fermions has a phase transition. Should one also expect a transition out of the weak coupling TS phase at a finite temperature? The answer is no. The phase transition at zero temperature has little to do with the gauge theory itself and disappears if we suppress the fermions. Moreover when the coupling is weak and the Higgs potential has a non-trivial minimum, we are in the phase with <u>unbroken</u> neutrino chirality. We believe then that the weakly coupled Weinberg-Salam model <u>will not have a phase transition at finite temperature</u>.

This conclusion should be taken with a grain of salt. It is (we believe) a mathematically valid statement. However, its practical consequences are vitiated by the smallness of the fine structure constant. In particular, remember that the absence of a phase transition was connected with the absence of a good order parameter to characterize the Higgs phase. This, in turn, was connected with the existence of monopoles (which here will be associated with the Z_2 subgroup of SU_2[16])

which could screen any external monopole compatible with the Dirac quantization condition.

Nambu [26] has discovered semiclassical configurations in the Weinberg Salam model which correspond to a monopole anti-monopole pair, connected by a magnetic flux tube. External static monopoles with the same magnetic charge, will also experience linear force laws in a semiclassical approximation. However for very large distances between the external monopoles, it becomes energetically favorable to form a configuration of two Nambu strings, one attached to each of the external sources. From this point on, the energy of the static monopole pair will fall exponentially with the distance between them. This process will take place with the probability $e^{-\frac{c}{\alpha}}$ where $\frac{cm_W}{\alpha}$ is the mass of the monopole anti monopole pair, (approximately the piece in the energy of a Nambu string which is independent of its length).

At very high temperature, (greater than twice the monopole mass) the monopoles will be freed from the Nambu string (both the energy and entropy of the string are proportional to its length) and will be easily produced. Thus the free energy of the static monopole pair will not behave linearly for any range of distances. However since the truly asymptotic behavior of the free energy will be the same (exponentially falling) at both low and high temperature we do not have a phase transition.

Now, however, consider what happens at the Kirshnitz-Linde-Weinberg "critical point." Below T_c an external monopole anti-monopole pair will feel a linear potential until it can be screened

by monopole pair creation. Since the probability of creating such a pair in empty space will be proportional to $e^{-\frac{cm_w}{\alpha k T_c}}$ which is very small, the external pair will feel the linear potential out to very large (cosmological) distances. On the other hand, above the transition point the linear potential disappears.

Thus to a good approximation we can neglect monopole pair creation and the situation is very close to phase transition. Quantities which would be singular at a real transition will be analytic but very rapidly varying near T_c . For all practical purposes we have a transition. The situation is somewhat analogous to that of a pot of water boiling in a closed room.. General theorems tell us that a finite volume system cannot have a phase transition but the water boils nonetheless.

For all practical purposes, the Kirshnitz-Linde-Weinberg symmetry restoring phase transition will occur at high enough temperature. Physical electrons and neutrinos, being singlets, will not be confined.

Finally we note again that in the Weinberg-Salam model with non-zero U(1) coupling there will be a "real" phase transition connected with U(1) symmetry restoration at high temperature. Our remarks about embedding the model in a compact gauge group also carry over to finite temperature

Conclusion

We have shown that the "Higgs" and "confining" regions of the $q = 1$ Abelian lattice Higgs model are part of the same phase of the theory, which we call the total screening phase. Furthermore, this phase does not disappear for any finite temperature. Its properties vary analytically with the temperature as well as with the couplings. For $q > 1$ we have found that the theory contains three phases. In the course of this analysis relations to Z_q lattice gauge theory and to QED with electric and magnetic charges were exposed.

We have used these facts to resolve the puzzling (to us) problem of "electron confinement" in high temperature weak interactions and to argue that weak interaction models with compact gauge groups and fundamental Higgs bosons do not undergo a finite temperature symmetry restoring phase transition. The practical consequences of this statement are diminished due to the smallness of the fine structure constant.

ACKNOWLEDGMENTS

We have benefited from illuminating discussions with many of our friends and colleagues, among whom we wish to thank Y. Aharonov, D. Amit, K. Bardakci, A. Casher, S. Elitzur, E. Fradkin, Y. Frishman, S. Mandelstam, and especially L. Susskind.

We also want to thank the Physics Department at the Weizmann Institute for providing the environment in which this work was begun. T. Banks would like to thank Professor Harry Woolf for his hospitality at the Institute for Advanced Study.

APPENDIX A

Intuitive Argument for Charge Liberation

The simplest model exhibiting confinement is the strong coupling limit of the Abelian lattice gauge theory. The Hamiltonian is

$$H = \frac{g^2}{2} \sum \vec{E}^2(x) \tag{A-1}$$

Each component of $\vec{E}$ is an integer valued field. The gauge invariant subspace is defined by

$$\Delta \cdot \vec{E}(x) \; |\psi> = 0 \tag{A-2}$$

Polyakov and Susskind[2,3] have shown that the gauge invariant partition function of this model is equal to the partition function of an xy ferromagnet. Using known properties of the xy model they show that confinement disappears above a finite temperature. We would like to give a more intuitive discussion of this phenomenon which will enable us to see why high temperature deconfinement should be expected in any confining theory.

The Hamiltonian (A-1) may be explicity diagonalized and the eigenstates satisfying (A-2) described as closed strings on the lattice. We can associate such strings with random walks as we did in our discussion of the Stone Thomas Forster picture of the Higgs model.

As before we neglect the restriction that disconnected loops are not allowed to touch. These excluded volumn effects are only important above the critical temperature. The partition function is then approximately

$$Z \sim e^{V\sum_{L=4}^{\infty} \frac{1}{L} \sum_{NBW(L)} e^{-\frac{\beta g^2}{2} \sum_x \vec{E}^2(x)}} \tag{A-3}$$

where $\sum_{NBW(L)}$ means the sum over all L step connected closed non-bactracking walks (CCNBW's) which pass through the origin, V is the volume of space and

$$E(x) = \sum_{L=1}^{L} (\vec{x}(i) - \vec{x}(i-1)) \, \delta(\vec{x}-\vec{x}(i)) \tag{A-4}$$

for the walk $\vec{x}(i)$. A standard convexity argument says that the average of the exponential of a quantity Q is greater than the exponential of the average of Q. Thus

$$\sum_{NBW(L)} e^{-\frac{\beta g^2}{2} \sum \vec{E}^2(x)} \geq N(L) \, e^{-\frac{\beta g^2}{2} \langle \sum \vec{E}^2(x) \rangle_L} \tag{A-5}$$

where $N(L)$ is the number of L step CCNBW's and $\langle \sum E^2 \rangle$ is the average over L step CCNBW's. $\langle \sum E^2 \rangle_L$ is clearly proportional to L for large L. Furthermore $N(L)$ is bounded from below by the number of L step self avoiding walks which (if the dimension of space is greater than 1) is known[24] to grow like e^{KL} for some positive K. The free energy density $-1/V\beta \ln Z$ is given by a series whose $L\underline{th}$ term grows like

$$e^{(KL - \frac{\beta g^2}{2} \bar{K}L)} \tag{A-6}$$

for large L. Thus at some critical temperature it diverges. For β smaller than the critical value, the singularity is cured by the excluded volume terms which we have neglected.

This is the physical mechanism for the deconfining phase transition. At large temperature "empty space" is filled with a fluctuating soup of long electric flux lines. Adding an external charged pair just adds one more flux line and does not significantly change the free energy.

Our picture implies that finite temperature "quark" liberation should not occur in one dimension since there are no conserved flux lines (with zero background field). In fact, the one-dimensional version of the xy model studied by Polyakov and Susskind has no finite temperature phase transition. In addition, Kogut, Fischler, and Susskind[25] have shown that the massive Schwinger model confines for all finite temperatures. In the second part of this appendix we will prove a similar result in the lattice version of the 1 + 1 dimensional Higgs model.

The vacuum of a four-dimensional continuum non-Abelian gauge theory (QCD) is undoubtedly more complicated than that of the simple models studied here. However, if color is confined the QCD vacuum probably expels color electric flux lines. Excited states (hadrons) are regions of space containing non-zero color flux (bags). The energy of a hadron will be more or less proportional to its volume. (We are speaking here of large highly excited hadrons where short range effects such as spin dependent forces are presumably unimportant.) If we assume that fluctuations of the bag shape on a length scale smaller than some characteristic size λ are suppressed

(below this scale fluctuations are described in terms of a symptotically free quarks and gluons rather than bags), then we can count the number of bag states by counting configurations of fixed volume on a lattice with spacing λ. Assuming the number of bags of fixed volume V goes like e^{KV} so the density of states at energy E is

$$\rho(E) \sim e^{cE} \tag{A-7}$$

This is, of course, the famous Hagedorn spectrum.[5] Our experience with the Abelian lattice gauge theory leads us to believe that the divergence of the partition function associated with the blow up of $\rho(E)$ does not imply a "limiting temperature" but rather a phase transition to an unconfined phase.

This connection between the Hagedorn spectrum and a phase transition to a non-confining phase was actually pointed out some time ago by Cabibbo and Parisi.[6] They argue that the phase transition is second order and that the subleading behavior of the Hagedorn spectrum determines the critical index.

B. The 1 + 1 Dimensional Lattice Higgs Model

The PG version of the partition function for this model on a Euclidean lattice is given by

$$Z = \sum_{\ell_{\mu\nu},\ell_\mu} e^{-\frac{e^2}{2}\Sigma\ell_{\mu\nu}^2} e^{-\frac{1}{2f^2}\Sigma\ell_\mu^2} \delta(\Delta_\nu\ell_{\mu\nu}-2\ell_\mu) \tag{B-1}$$

We study the charge two model since we want external unit charges to be confined at zero temperature.

For the $\theta = 0$ case, we write, $\ell_{\mu\nu} = \varepsilon_{\mu\nu}m$, $\ell_\mu = \varepsilon_{\mu\nu}\Delta_\nu m$ and obtain

$$Z = \sum_m e^{-4e^2\Sigma m^2} e^{-\frac{1}{2f^2}\Sigma(\Delta_\mu m)^2} \tag{B-2}$$

For small f^2 the model reduces to one studied by Susskind[3] (if we make the time continuous) and is confining at all temperatures. For large f^2 we apply the Poisson sum formula and (B-2) becomes

$$Z = \int d\phi \sum_p e^{-\frac{1}{2f^2}\Sigma(\Delta_\mu\phi)^2} e^{-e^2\Sigma\phi^2} e^{2\pi i\Sigma p\phi} \tag{B-3}$$

For large f^2 non-zero values of p are suppressed. Summing only over $p = \pm 1,0$ we obtain

$$Z = \int d\phi\ e^{-\frac{1}{2f^2}\Sigma(\Delta_\mu\phi)^2} e^{-e^2\Sigma\phi^2} e^{\Sigma\cos 2\pi\phi} \tag{B-4}$$

By "Fermionization" this model becomes the massive Schwinger model with a large repulsive four Fermion coupling.

The generalization of (B-4) in the presence of an external current J_μ is

$$Z(J_\mu) = \int d\phi \; e^{-\frac{1}{2}\Sigma(\Delta_\mu\phi)^2} \; e^{-e^2f^2\Sigma\phi^2} \; e^{\Sigma\cos(2\pi(f\phi+Q))} \tag{B-5}$$

where

$$J_\mu = 2\varepsilon_{\mu\nu}\Delta_\nu Q \tag{B-6}$$

For static sources Q is time independent and we can easily take the time continuum limit. The resulting Hamiltonian is

$$\begin{aligned} H_Q &= \sum -\frac{1}{2}\frac{\partial^2}{\partial\phi^2} + \sum \{\tfrac{1}{2}(\Delta\phi)^2 + e^2f^2\phi^2 - \cos 2\pi(f\phi+Q)\} \\ &\equiv K + P \end{aligned} \tag{B-7}$$

To test for confinement at finite temperature we must compute

$$e^{-\beta F(R)} = \mathrm{tr}\; e^{-\beta H_Q}/\mathrm{tr}\; e^{-\beta H_o} \tag{B-8}$$

for the Q that corresponds to a static unit charged particle-antiparticle pair:

$$Q = \frac{1}{2}[\theta(R-x) - \theta(x)] \tag{B-9}$$

We will content ourselves with showing that these charges are confined even at extremely high temperature.

For small β we can use the formula

$$e^{-\beta(K+P)} = e^{-\beta K}\, e^{-\beta P}\, e^{-\frac{1}{2}\beta^2[K,P]}(1 + O(\beta^3)) \tag{B-10}$$

To write $e^{-\beta F(R)}$ as

$$e^{-\beta F(R)} \underset{\beta\to 0}{\simeq} \frac{\int d\phi\, e^{-\beta\Sigma\, \frac{1}{2}(\phi(x)-\phi(x+1))^2 + 4e^2f^2\phi^2 - \cos 2\pi(f\phi+Q)}}{\int d\phi\, e^{-\beta\Sigma\, \frac{1}{2}(\phi(x)-\phi(x+1))^2 + 4e^2f^2\phi^2 - \cos 2\pi\,(f\phi)}} \tag{B-11}$$

In this formula ϕ is a time independent field.

We can write (B-11) in transfer matrix form

$$e^{-\beta F(R)} \underset{L\to\infty}{=} \lim \mathrm{tr}\; T_o^{L-R}\; T_{1/2}^{R}\; T_o^{L}/\mathrm{Tr}\; T_o^{2L} \tag{B-12}$$

where

$$<\phi|(T_a)|\phi'>\; e^{-\beta/2(\phi-\phi')^2}\; e^{-\beta(\,e^2f^2\phi^2\; - \cos 2\pi(f\phi'+a)} \tag{B-13}$$

The limit $L \to \infty$ projects out the eigenstate $|\psi_o|$ of T_o with largest eigenvalue:

$$e^{-\beta F(R)} = <\psi_o|(T_{1/2}/t_o)^R\,|\psi_o> \tag{B-14}$$

$$T_o\,|\psi_o> = t_o|\psi_o> \tag{B-15}$$

For large R (B-14) will be dominated by the largest eigenvalue of $T_{1/2}$

$$e^{-\beta F(R)} \underset{R\to\infty}{\simeq} |<\psi_o|\psi_{1/2}>|^2\; (t_{1/2}/t_o)^R \tag{B-16}$$

When e^2f^2 is large we can neglect the coupling of ϕ's on different sites of the lattice and the transfer matrix becomes

$$<\phi|T_a|\phi'> \to \delta_{\phi,\phi^1} e^{-\beta(\,e^2f^2\phi^2\; - \cos 2\pi(f\phi+a))} \tag{B-17}$$

and is diagonal in the ϕ representation.

The maximum value that a function of the form

$$e^{-\beta(\phi^2 - \cos G(\phi))} \tag{B-18}$$

can take on is e^{β}. If $a = 0$ this value is in fact achieved when $\phi = 0$ but for $a = 1/2$ it is never attained. Thus in this limit $t_{1/2} < t_o$ and (B-16) vanishes like $e^{-K\beta R}$ as $R \to \infty$.

In the opposite limit when $e^2 f^2 = 0$ the two transfer matrices T_o and $T_{1/2}$ are transformable into each other by $\phi \to \phi + 1/2f$. The largest eigenvalues are thus equal. However, the "roof state" eigenfunction of T_o is concentrated near $\phi = 0 + n$ while that of $T_{1/2}$ is concentrated near $\phi = 1/f + n$. The first order correction to the eigenvalue is given by the "roof state" expectation value of

$$-4e^2 f^2 \beta \phi^2 \tag{B-19}$$

$\langle \phi^2 \rangle$ will be larger for $T_{1/2}$ and so $t_{1/2} < t_o$ for small e^2 also.

Thus the two-dimensional lattice Higgs model confines at all temperatures as was required by our intuitive argument.

APPENDIX C

Field Theoretical approximation to lattice theories.

The analysis of a field theory involves the discovery of its topological singularities and a description of their quantum behavior. A first step in this direction was the study of compact lattice versions of various field theories utilizing the methods developed in references (4,13,14). These methods have been extensively used by us in this paper. Once the topological structure has been uncovered one may approximate the lattice behavior of these singularities by a quantum field theory. In particular such a treatment was presented in the section following eq. (15). All our reservations about this method have already been made in the text. The discussion here is limited to listing some such correspondences and commenting on their usefulness.

1. The partition function of strongly coupled QED treated by Polyakov[2] and Susskind[3] is given by:

$$Z(\beta) = \mathrm{tr}_{G.I.}\ e^{-\beta H} \tag{C1}$$

where the trace is over gauge invariant states and H is

$$H = \frac{g^2}{2a} \sum_{\text{links}} E(r,i)^2 \tag{C2}$$

a being the lattice spacing.

This can be mapped into a field theory of a self interacting complex scalar field whose Lagrangian is given by

$$\mathscr{L} = \frac{a^2}{2D} |\nabla\phi|^2 - \frac{1}{a^2}(\exp\frac{\beta g^2}{2a} - 2D)\phi^*\phi$$

where D is the number of space dimension and V is an unknown repulsive potential.

Above some value of T the system undergoes a Goldstone transaction and the confinement force turns into a Coulomb force. By contrast the same limit of a Z(2) gauge theory is mapped into a <u>real</u> self interacting scalar field and thus does not undergo a Goldstone transition instead the deconfining phase is a plasma with a massive photon.

The exact correspondence with the U(1) model has been worked out in ref.(2,3).

2. The Abelian-Higgs model in its Villain version (eq.6) (at T = 0)

$$Z = \int_0^{2\pi} \frac{d\chi}{2\pi} \frac{d\theta_\mu}{2\pi} e^{-s} = \sum_{\ell_{\mu\nu}, \ell_\mu} e^{-\frac{e^2}{2}\ell_{\mu\nu}^2} e^{-\frac{1}{2f^2}\Sigma\ell_\mu^2} \delta(\Delta_\mu \ell_\mu)\delta(\Delta_\nu \ell_{\mu\nu} - q\ell_\mu)$$

was mapped into a field theory of magnetic monopoles and electric charges given by

$$Z = \int_{-\infty}^{\infty} DF_{\mu\nu} DA_\mu \quad D\phi_m^* D\phi_m D\phi_e^* D\phi_e \exp(-s) \qquad \text{(C3)}$$

where the Lagrangian is:

$$\mathscr{L} = - F_{\mu\nu}^2 + \frac{i}{\sqrt{2}} F_{\mu\nu}(\partial_\mu A_\nu - \partial_\nu A_\mu) + |D_\mu \phi_e|^2 + |\bar{D}_\mu \phi_m|^2$$

$$- m_m^2 \phi_m^* \phi_m - m_c^2 \phi_c^* \phi_e + V(\phi_e^* \phi_e) + V(\phi_m^* \phi_m) \qquad \text{(C4)}$$

where $V(\phi_e^* \phi_e)$ and $V(\phi_m^* \phi_m)$ are unknown repulsive potentials and ϕ_m the magnetic scalar field couples to the photon via

$$\bar{D}_\mu \phi_m = (\partial_\mu - \frac{2\pi i}{e} \varepsilon_{\mu\nu\lambda k} n_\nu \ (n \cdot \Delta)^{-1} F_{\lambda k}) \ \phi_m \qquad \text{(C5)}$$

the bare masses of ϕ_m and ϕ_e are given by the approximate (see text) formulae:

$$a^2 \ m_e^2 = \exp(\frac{1}{2f^2} + \frac{1}{2} D(0) q^2 e^2) - 8 \qquad \text{(C6)}$$

D(0) is the short distance value of the Coulomb propagator appearing in eq. (12). As was studied in the text this leads to the existence of three phases for the system.

3. Taking the $f \to \infty$ limit of eq. (6) leads to a Z_q gauge theory, it is thus found that a Z_q lattice gauge theory can be approximated by the $f \to \infty$ limit of equations C-4 and C-6. In particular, demanding both masses in C-6 to be positive we can obtain an estimate for the value of q above which a third phase appears. After adding the demand that the self dual point (which also the approximate model has) be below the $m_m^2 = 0$ point one obtains $q \geq 4$.

References

1. D. Kirshnitz and A. Linde, Phys. Lett. 42B, 471 (1972)
   S. Weinberg, Phys. Rev. D9, 3357 (1974)
   L. Dolan and R. Jackiw, Phys. Rev. D9, 3320 (1974).
2. A. Polyakov, Trieste preprint, unpublished.
3. L. Susskind, SLAC preprint, to be published in Phys. Rev. D.
4. M. Einhorn and R. Savit, Phys. Rev. D17, 2583 (1978).
5. R. Hagedorn, Nuovo Cimento Suppl. 3 (1965) 147.
6. N. Cabibbo and G. Parisi, Phys. Lett. 59B, 67 (1975).
7. E. Fradkin and S. Shenker, Stanford preprint, in preparation.
8. K. Osterwalder and E. Seiler, Ann. Phys. 110 (1977).
9. B. Simon and R. G. Griffiths, Comm. Math. Phys. 33, 145 (1978).
10. J. Villain, Journal of Physics (Paris) 36, 581 (1975).
11. M. Peskin, Ann. Phys. 113, 122 (1978).
12. G. 't Hooft, Nuc. Phys. 130B, 1 (1978).
13. T. Banks, J. Kogut, and R. Myerson, Nuc. Phys. B129 (1977) 493; M. Peskin op. cit.
14. R. Savit, Phys. Rev. Lett. 39, 55 (1977); Phys. Rev. B17, 1340 (1978).
15. R. Balian, J. Drouffe, and C. Itzykson Phys. Rev. D10, 3376 (1974).
16. S. Elitzur, R. Pearson, and J. Shigemitsu, in preparation.
    D. Horn, private communication.
17. M. Stone and P. Thomas, Phys. Rev. Lett. 41, 351 (1978);
    D. Forster, Phys. Lett. 77B, 211 (1978).
    For an analysis in continuum theories see K. Bardakei and S. Samuel, Berkeley Preprint.

18. J. Schwinger, Particles Sources and Fields, Addison Wesley, New York (1972) p.239.

19. S. Coleman and E. Weinberg, Phys. Rev. D7, 1888 (1973); E. Halperin, M. Lubensky, and S. Ma, Phys. Rev. Lett. 32, 292 (1974).

20. M. Peskin, op. cit.

21. See B. Simon and M. Reed, Methods of Modern Mathematical Physics, Academic Press 1972 for a definition of relative boundedness.

22. E. Fradkin and L. Susskind, Phys. Rev. D., 17, 2637 (1978).

23. M. Kisslinger and P. Morley, Phys. Rev. D13, 2765 (1976).

24. C. Domb, Adv. Chem. Phys. XV 229, Interscience, New York, 1969.

25. W. Fischler, J. Kogut, and L. Susskind, SLAC preprint 1978.

26. Y. Nambu, Nuc. Phys. B130, 505 (1977).

Footnotes

Footnote 1: Two years ago L. Susskind pointed out to one of the authors (TB) that physical particles in the Weinberg-Salam model are singlets. His argument is reproduced in Section III.

Footnote 2: The reader may ask why we do not use the expectation value of the Higgs field as an order parameter. The answer is that all non-gauge invariant operators, have zero expectation value in a lattice theory. Even operators which are locally but not globally invariant appear to vanish (except when $f^2 = \infty$ when they are identically equal to 1 for all e^2).

Footnote 3: It is at this point that the analogy between Higgs models and Heisenberg ferromagnets appears to breakdown. The $q = 1$ ferromagnet of equation (2) has neither phase transitions nor massless particles for any nonzero value of β and h. The $q = 2$ model has a phase transition but no massless particles except at the critical point.

The origin of this difference is easily explained. The methods of ref. (11) allow us to write a low temperature expression analogous to (12) for the spin correlation function of the ferromagnet equation (2). The m_μ topological excitations are replaced by tensors in four dimensions (vectors in 3) and do not give the Goldstone bosons a mass. The ℓ_μ however are replaced by scalar charges and for small h and large β the system is approximately a Coulomb gas. The Goldstone boson therefore gets a mass

via "Debye screening" for arbitrarily small h. Only in two dimensions, when the Coulomb gas has a dielectric phase for small h, does a massless spin wave exist in nonzero magnetic field. Thus as usual, it is a two-dimensional spin model which is most analogous to the four-dimensional gauge theory.

Figure Captions

Figure 1 - The shaded region is the region of analyticity proven rigorously by Fradkin and Shenker for Higgs models with a general compact gauge group and Higgs fields in the fundamental representation.

Figure 2 - Proposed phase diagram for the $q = 1$ Higgs model. The solid line is a line of second order transitions, the dotted line a line of first order transitions.

Figure 3 - Proposed phase diagram for the $q = 2$ model. The order of the transitions on the line AB (which may be of zero length) has not been determined. The point B is at $e = \sqrt{\pi}$.

Figure 4 - Phase diagram for the Higgs model for large q. The points A and B are related by the dual transformation $2\pi/e_A = q\, e_B$.

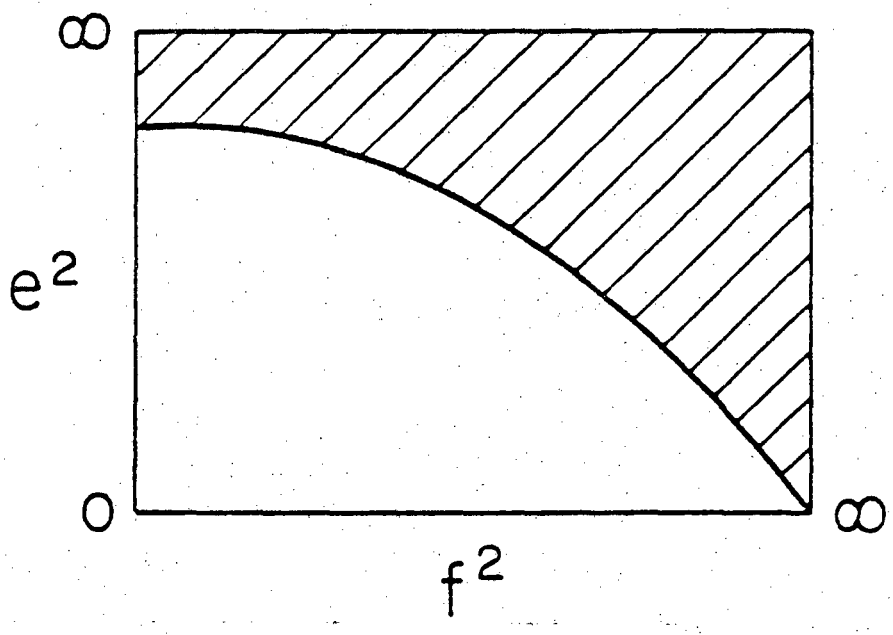

FIG. 1

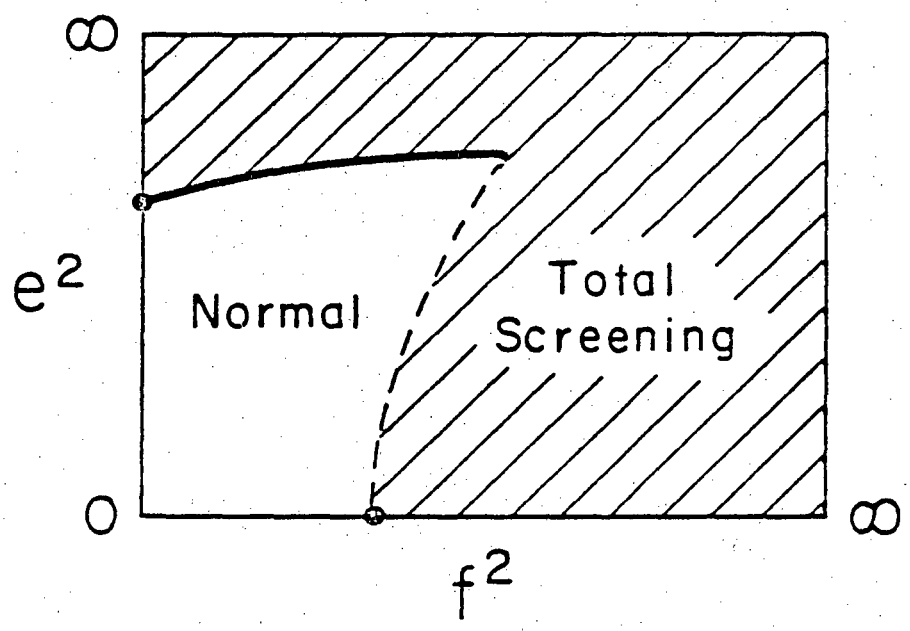

FIG. 2

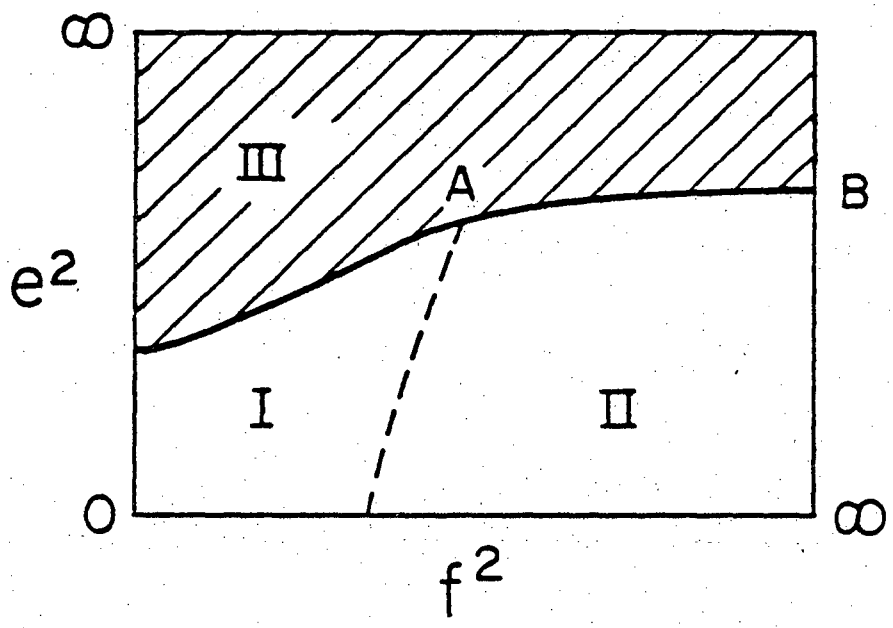

FIG. 3

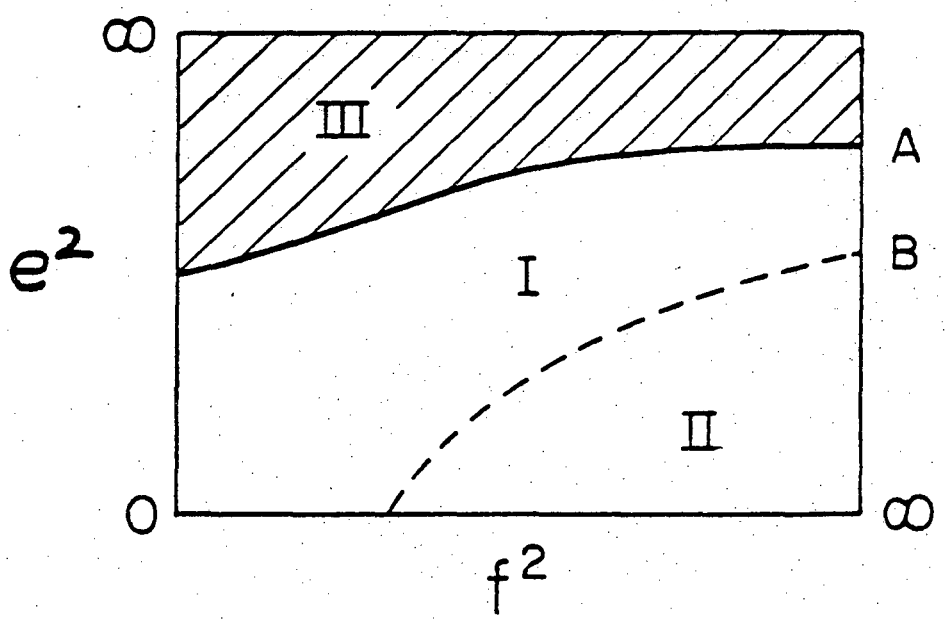

FIG. 4

This report was done with support from the Department of Energy. Any conclusions or opinions expressed in this report represent solely those of the author(s) and not necessarily those of The Regents of the University of California, the Lawrence Berkeley Laboratory or the Department of Energy.

Reference to a company or product name does not imply approval or recommendation of the product by the University of California or the U.S. Department of Energy to the exclusion of others that may be suitable.

TECHNICAL INFORMATION DEPARTMENT
LAWRENCE BERKELEY LABORATORY
UNIVERSITY OF CALIFORNIA
BERKELEY, CALIFORNIA 94720