Presented at Fourth
International Conference on
Magnet Technology, BNL,
Upton, N. Y., Sept. 19-22, 1972

LRL-905

# A "CORNER" SEPTUM MAGNET FOR MULTI-TURN INJECTION

RECEIVED
LAWRENCE
RADIATION LABORATORY

Robert T. Avery and Philip F. Meads, Jr.

September 1972

AEC Contract No. W-7405-eng-48

For Reference

Not to be taken from this room

LBL-905

## DISCLAIMER

This document was prepared as an account of work sponsored by the United States Government. While this document is believed to contain correct information, neither the United States Government nor any agency thereof, nor the Regents of the University of California, nor any of their employees, makes any warranty, express or implied, or assumes any legal responsibility for the accuracy, completeness, or usefulness of any information, apparatus, product, or process disclosed, or represents that its use would not infringe privately owned rights. Reference herein to any specific commercial product, process, or service by its trade name, trademark, manufacturer, or otherwise, does not necessarily constitute or imply its endorsement, recommendation, or favoring by the United States Government or any agency thereof, or the Regents of the University of California. The views and opinions of authors expressed herein do not necessarily state or reflect those of the United States Government or any agency thereof or the Regents of the University of California.

# A "CORNER" SEPTUM MAGNET FOR MULTI-TURN INJECTION*

Robert T. Avery
Lawrence Berkeley Laboratory
Berkeley, California

and

Philip F. Meads, Jr.
William M. Brobeck & Associates
Berkeley, California

## Abstract

A system is described for compactly injecting 25 or more turns into a strong-focussing ring by simultaneous multi-turn injection into both horizontal and vertical betatron phase space. The key element is a novel "corner" septum magnet which introduces the beam at a location displaced both radially and vertically from the equilibrium orbit and incorporates a thin current-carrying septum on one face and a thin flux-carrying septum on the adjacent face.

## Introduction

The process of multi-turn injection into horizontal betatron phase space of proton strong-focussing rings is well known.[1,2] It commonly is accomplished by moving the equilibrium orbit away from the inflector at a substantially constant rate and choosing the horizontal (radial) betatron frequency so most of the injected beam misses the inflector for a number of turns at which time the equilibrium orbit has moved sufficiently so no further possibility of loss exists. This method results in large losses for early turns and large dilution of phase space in later turns, and typically permits injection into the ring of two to ten or so turns.

This paper describes a new system for beam stacking in vertical as well as horizontal betatron phase space. The system was evolved to meet the requirement of the LASL WNR Ring[3] for stacking 25 or more turns of incoming beam from the LAMPF 800 MeV proton linear accelerator while minimizing radiation-inducing beam losses and minimizing dilution of betatron phase space. A possible arrangement of the injection line is shown in Fig. 1 where the beam first passes through septum magnets IS-3 and IS-2 of conventional design before arriving at the IS-1 corner septum magnet.

*Work supported by the U. S. Atomic Energy Commission.

## Corner Septum Magnet

The key element of this injection system is a "corner" septum magnet which has a thin current-carrying septum on one face and a thin flux-carrying ferromagnetic septum on the adjacent face. A tentative design[4] now being considered is shown in Fig. 2. The principal parameters of this corner septum are presented in Table I.

Table I. Principal parameters of proposed "Corner" septum.

| | |
|---|---|
| **Beam** | |
| Proton energy | 800 Mev |
| Bend angle | $9 \times 10^{-3}$ rad |
| **Magnet** | |
| Length effective | 125 cm (49.2 in.) |
| Gap height | 1.91 cm (0.75 in.) |
| Gap width | 2.54 cm (1.00 in.) |
| Gap flux density | 350 G |
| **Septum Conductor** | |
| Material | Copper |
| Thickness | 0.02 cm (0.008 in.) |
| Pulse current | 530 A |
| Current density | 13.7 kA/cm$^2$ (88.3 kA/in.$^2$) |
| Pulse duration, up to | 50 μsec |
| Rep rate | 120 Hz |
| Duty cycle, up to including rise and fall | $8 \times 10^{-3}$ |
| Dissipation, mean | 15 W |
| Cooling | Radiant |
| Temp rise (calc.) | 45°C |
| **Ferromagnetic Septum** | |
| Material | Ferrite |
| Slope | 8.0 deg |
| Flux density | 2500 G |
| @ Field strength | ~ 0.5 Oe |

## Septum Conductor

The septum conductor needs to be very thin for good beam stacking efficiency. A thickness of 0.02 cm (0.008 in.) was somewhat arbitrarily selected and it now appears that an even thinner septum might have been considered. If the magnet is energized only during beam injection, the ohmic heat dissipation in the septum conductor is only 15 W. Thus, cooling by thermal radiation to the surroundings can be considered. If the copper septum conductor is chemically treated to achieve an emissivity of 0.8, the corresponding temperature rise of the septum above surroundings is calculated as 45°C which appears acceptable.

Magnetic pressure against the septum conductor produces a bending stress of less than 300 N $m^{-2}$ (435 psi) and a deflection of less than 10 μm (0.0004 in.), which are modest. The mechanical fundamental resonant frequency is ~ 1000 Hz which is well above the maximum rep rate of 120 Hz.

## Ferromagnetic Septum

The ferromagnetic septum is an extension of the Lambertson flux-carrying-septum to the C-magnet geometry. A ferrite, such as Ferroxcube 3E2A, is contemplated for the ferromagnetic septum and return core of the magnet. Ferrite offers adequate saturation induction and frequency response coupled with low coercive force and ease of fabrication. Its high resistivity eliminates the need for separate septum electrical insulation which would be difficult to provide. It is contemplated that the magnet core and septum will be fabricated from several blocks of ferrite which will be clamped into accurate position in a water-cooled support frame (not shown). It has been demonstrated at the CERN ISR[5] that vacuum of $10^{-10}$ Torr can be achieved adjacent to ferrite magnets.

## Drive Circuitry

The IS-1 corner septum magnet has an inductive stored energy at full current of only 0.3 J. This is easily driven by a pulse-forming-network, such as shown in Fig. 3, in which the septum magnet forms the inductance of the first PFN section.[6] A shunt regulator is contemplated to provide fine regulation of magnet current.

## Beam Impingement

During injection, the septum conductor and ferromagnetic septum may be struck by the incoming and/or circulating proton beams. If the beam loss is great enough, problems due to overheating, thermal fatigue or fracture, excessive septum warpage, or excessive induced radioactivity may result. Additional studies are needed to assess the magnitude of these problems which it is hoped will be manageable.

## Multi-Turn Strategy

The object is to densely pack the injected beam into betatron phase space while minimizing losses to the injection septum and other apertures. For the proposed new system, the incoming beam is injected at a position that is displaced both horizontally and vertically from the equilibrium orbit. The injected beam then performs betatron oscillations about the equilibrium orbit both vertically and horizontally. The horizontal and vertical tune values can be varied independently during injection as the equilibrium orbit is shifted away from the injection septum horizontally, and perhaps vertically also. The game is to find suitable programmed values of horizontal tune, vertical tune, horizontal orbit shift and vertical orbit shift that optimally meet the end objective.

A specific method is here proposed that accomplishes both high density packing and minimal losses. The method is to inject along a logarithmic spiral in matched radial phase space (coordinates $x\beta^{-1/2}$, $x'\beta^{1/2}$) with an ellipse of constant dimension as shown in Fig. 4. The spiral is generated so that area is swept out at a constant rate. This is achieved by varying the rate of shift of the equilibrium orbit and also the radial betatron frequency, which determines the rate of rotation about the equilibrium orbit. This is accomplished by pulsed deflecting magnets and pulsed quadrupole magnets. The optics of the injection line do not vary with time. Ellipses representing the injected beam are laid in sequence around the spiral with turn N lying between turns N-1 and N+1. As is seen from the figure, most of the previous turns would be lost on the septum were it not for an induced coherent vertical betatron oscillation which safely carries the previous turn under the here-described corner septum. The vertical betatron frequency may vary substantially as it matters only during the first turn. One quadrupole would suffice to provide the required tune shifts in both planes were it not for resonant effects. The pulsed quadrupoles are placed at three locations such that they perturb the radial betatron frequency without opening up half integer stop bands. These perturbations drive the vertical betatron frequency near a half integer value which is required for missing the septum. A local perturbation of the radial amplitude amounting to 15% occurs. The

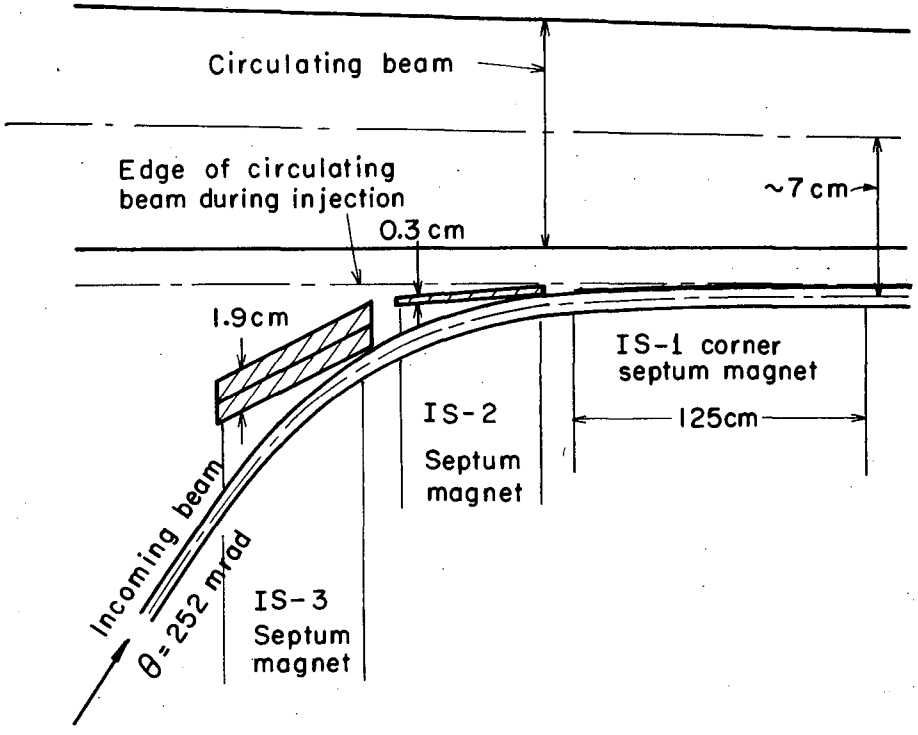


Fig. 1. Possible beam injection arrangement for LASL WNR Ring.

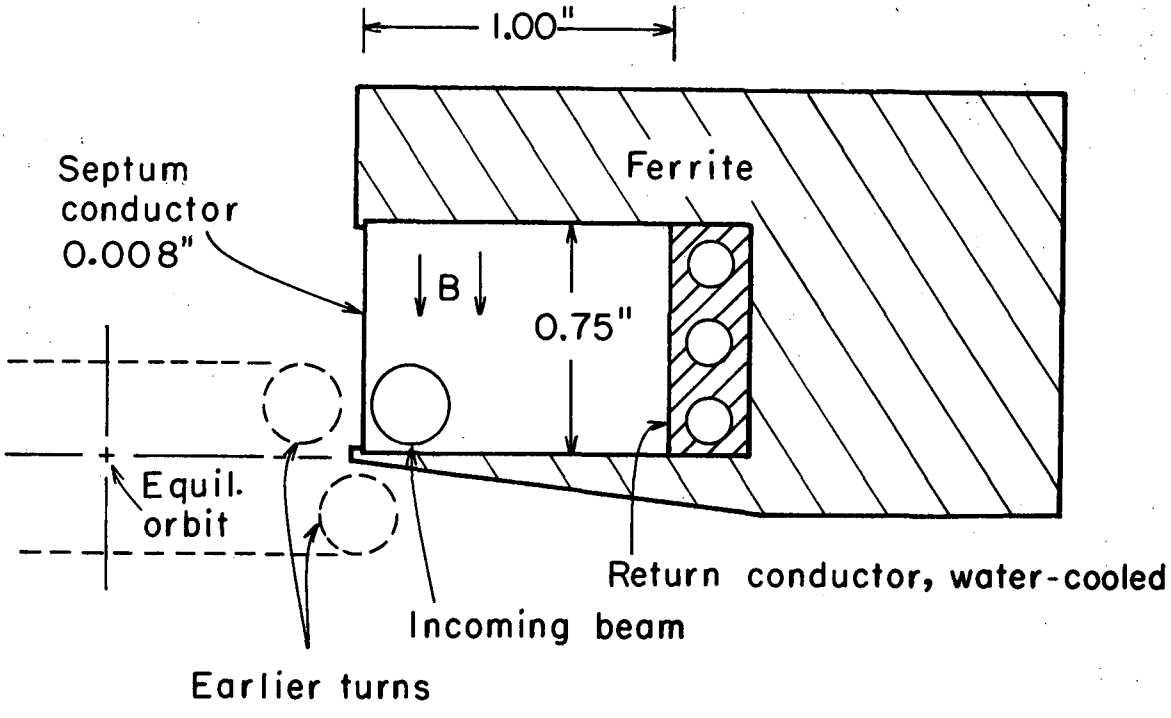


Fig. 2. Cross section of proposed "corner" septum magnet.

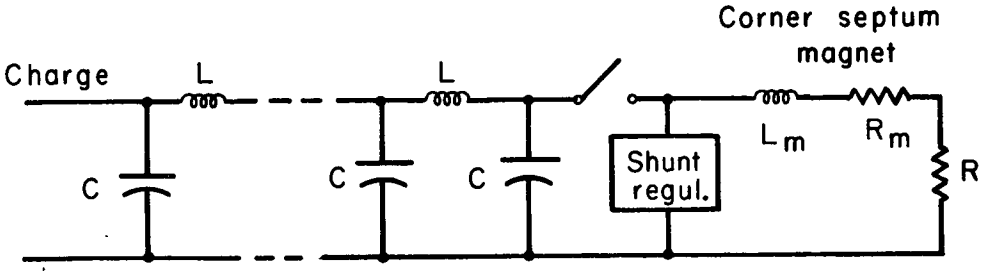


Fig. 3. Simplified schematic of pulse-forming-network suitable for driving the corner septum magnet.

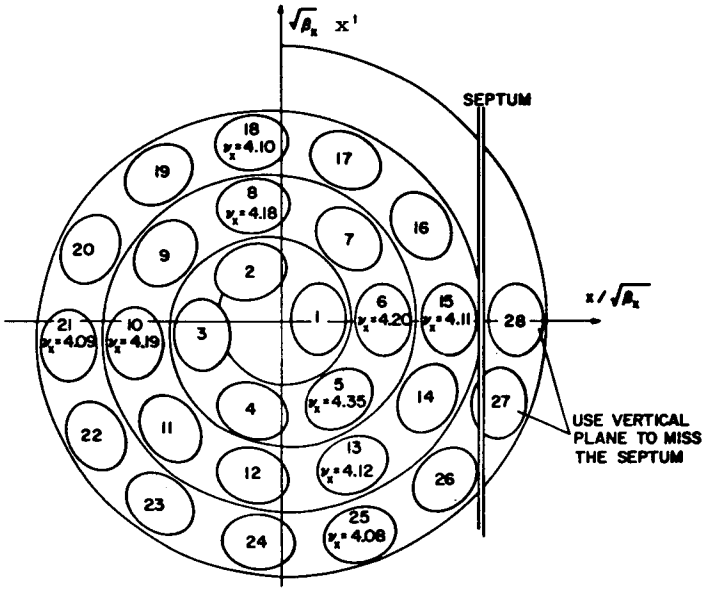


Fig. 4. Normalized betatron phase-space diagram for a proposed method of injecting 28 turns.

effect on the vertical plane is much smaller. During the injection process, which lasts about seven μsec, several minor resonances are crossed rapidly. The sensitivity to jitter in the pulsed dipoles and pulsed quadrupoles can be reduced by opening up the spiral slightly. Off-energy particles are similarly injected provided the radial tune shift with momentum error has been corrected.

## Conclusions

By injecting into both vertical and horizontal betatron phase spaces, more beam current can be stacked in an accelerator or storage ring. The described corner septum magnet permits efficient beam stacking and appears technically feasible. For the LASL WNR Ring, the effects of beam impingement on the septum magnet need further study.

## References

1. R. Billinge, E. L. Hubbard, R. Juhala, and R. W. Oram, IEEE Trans. Nucl. Sci. NS-18 No. 3, 979 (1971).

2. R. T. Avery, "Feasibility of Vertical Injection into Booster," Lawrence Berkeley Laboratory Report UCID-3128 (1967).

3. R. T. Avery, R. R. Fullwood, A. A. Garren, J. T. Gunn, A. J. Lieber, and P. F. Meads, Jr., "A Study to Adapt a Weak Focusing Synchrotron to a Strong Focusing Proton Storage Ring," Proc. of this 4th Int. Conf. Mag. Tech. (1972).

4. R. T. Avery, "Injection 'Corner' Septum," Lawrence Berkeley Laboratory Report UCID-3572 (1972).

5. H. Kuhn, W. C. Middelkoop and H. O'Hanlon, IEEE Trans. Nucl. Sci. NS-16, No. 3, 738 (1969).

6. C. Pike (Lawrence Berkeley Laboratory), private communication.

LEGAL NOTICE

*This report was prepared as an account of work sponsored by the United States Government. Neither the United States nor the United States Atomic Energy Commission, nor any of their employees, nor any of their contractors, subcontractors, or their employees, makes any warranty, express or implied, or assumes any legal liability or responsibility for the accuracy, completeness or usefulness of any information, apparatus, product or process disclosed, or represents that its use would not infringe privately owned rights.*

*TECHNICAL INFORMATION DIVISION*
*LAWRENCE BERKELEY LABORATORY*
*UNIVERSITY OF CALIFORNIA*
*BERKELEY, CALIFORNIA 94720*