LBL-9106 c.2
UC-95d
EEB-79-03

Lawrence Berkeley Laboratory
UNIVERSITY OF CALIFORNIA

ENERGY & ENVIRONMENT DIVISION

SAVING SCHOOLHOUSE ENERGY: FINAL REPORT

John Rudy, H. W. Sigworth, Jr., and A. H. Rosenfeld

June 1979

TWO-WEEK LOAN COPY

This is a Library Circulating Copy which may be borrowed for two weeks. For a personal retention copy, call Tech. Info. Division, Ext. 6782

RECEIVED
LAWRENCE
BERKELEY LABORATORY

OCT 15 1979

LIBRARY AND
DOCUMENTS SECTION

LBL-9106 c.2

Prepared for the U.S. Department of Energy under Contract W-7405-ENG-48

DISCLAIMER

This document was prepared as an account of work sponsored by the United States Government. While this document is believed to contain correct information, neither the United States Government nor any agency thereof, nor the Regents of the University of California, nor any of their employees, makes any warranty, express or implied, or assumes any legal responsibility for the accuracy, completeness, or usefulness of any information, apparatus, product, or process disclosed, or represents that its use would not infringe privately owned rights. Reference herein to any specific commercial product, process, or service by its trade name, trademark, manufacturer, or otherwise, does not necessarily constitute or imply its endorsement, recommendation, or favoring by the United States Government or any agency thereof, or the Regents of the University of California. The views and opinions of authors expressed herein do not necessarily state or reflect those of the United States Government or any agency thereof or the Regents of the University of California.

LBL-9106
EEB-79-03

SAVING SCHOOLHOUSE ENERGY:

FINAL REPORT

By John Rudy, H.W. Sigworth, Jr., and A.H. Rosenfeld

Energy and Environment Division
Lawrence Berkeley Laboratory
University of California
Berkeley, CA 94720

June 30, 1979

The work described in this report was funded by the Office of Buildings and Community Systems, Assistant Secretary for Conservation and Solar Applications of the U.S. Department of Energy under contract No. W-7405-ENG-48.

TABLE OF CONTENTS

Executive Summary.....2

Chapter 1: INTRODUCTION.....6

Chapter 2: SELECTION OF ENERGY CONSERVATION RETROFITS.....8

Chapter 3: MONITORING OF ENERGY USE.....9

Chapter 4: RESULTS.....14

Chapter 5: WHY ACTUAL RESULTS DIFFER FROM PREDICTED RESULTS.....16

Chapter 6: CONCLUSIONS.....26

Supplement A: FORMULATING AN ENERGY CONSERVATION PROGRAM FOR YOUR SCHOOL SYSTEM

Part I: GENERAL.....28

Part II: IS YOUR BASIC HEATING SYSTEM FUNCTIONAL?.....29

Part III: IS YOUR MAINTENANCE PROGRAM ADEQUATE?.....33

Part IV: ENERGY CONSERVATION OPPORTUNITIES USUALLY HAVING GOOD PAYBACK POTENTIAL.....38

Part V: ENERGY CONSERVATION OPPORTUNITIES WHICH MAY PROVIDE ADEQUATE PAYBACK POTENTIAL.....43

Part VI: RETROFITTING A "TYPICAL" SCHOOL.....45

Part VII: SPECIFYING YOUR RETROFITS.....55

Part VIII: INSURING THAT YOU RECEIVE VALUE FOR YOUR EXPENDITURE.....56

APPENDIX 1: PUBLIC SCHOOLS ENERGY CONSERVATION MEASURES, Management Summaries, SAVING SCHOOLHOUSE ENERGY American Association of School Administrators

EXECUTIVE SUMMARY

The elementary, intermediate, and secondary schools of America use an estimated 11% of all of the space heating and cooling energy consumed in the United States. Over 50% of these schools now in use were built during the post World War II "baby boom" period. Typically these schools are heated and ventilated only and are for the most part over heated and over ventilated. They contain large window areas and are poorly insulated. These schools frequently employ hot water heating systems which are incorrectly designed and improperly balanced; have oversized boilers for an energy efficient heating and ventilation system and are operated in an inefficient mode. They employ control systems designed to operate the heating and ventilating system for the comfort of occupants rather than for efficient energy consumption. It should be noted that comfort and efficiency are not mutually exclusive. The American Association of School Administrators (AASA) estimates that 50% of the energy used by schools is wasted.[1]

School buildings are apt to be poorly maintained, especially with regard to their mechanical systems. Many school districts do not have effective preventive maintenance programs. Concern is usually directed at keeping buildings warm. When spaces become too warm the occupants can, and do, open the windows to restore comfort.

The "Saving Schoolhouse Energy" program was proposed by AASA early in 1976 to provide guidelines for identifying and analyzing energy conserving opportunities (ECO's) in existing school buildings and to demonstrate the desirability of retrofitting these buildings. The program emphasized modifications to operational practice and cost effectiveness of capital modifications utilizing "off the shelf" hardware. The five phases of this program included:

1) site selection and identification of cost effective ECO's

2) perform the A/E design to accomplish the retrofits

3) implementation of the retrofits

4) results monitoring

5) dissemination of the findings.

The major portion of the funding for phase 1 was provided by the Federal Energy Adminstration (FEA). Phases 2 through 5 were funded by the United States Energy Research and Development Administration (ERDA) and its successor, the U.S. Department of Energy (DOE). A non-government portion, amounting to approximately 25% of the total retrofit cost, was provided by the school

---

1. Public Schools Energy Conservation Measures Reports prepared for the Federal Energy Administration by the American Association of School Administrators, Public Schools Energy Measures, Management Summaries (Appendix 1).

systems involved and by private sector donations of materials and services.

Upon completion of phase 1 by AASA, Lawrence Berkeley Laboratory (LBL) was selected by ERDA to conduct the remaining phases of the program. LBL subcontracted phases 2 and 3 to AASA. Phases 2 and 3 were expected to have been completed before the 1977-78 school year in order to provide two heating seasons during which the space heating and electricity savings were to be monitored. The necessary retrofits were not installed during the 1977-78 season, due to funding, procurement, contracting, and coordination difficuulties. Therefore, significant data were not gathered until the 78-79 heating season.

When the preliminary 78-79 data were analyzed and it became evident that the anticipated savings from the implemented retrofits (about 60% of predicted heating fuel savings and 15% of predicted electrical savings), were not being achieved, a plan for investigation was formulated and implemented. This investigation included a closer scrutiny of the phase 1 and phase 2 work, and an on site verification of retrofit and monitoring system operation. The following were observed:

1. Some of the phase 1 reports predicted substantial savings which could not be produced by the retrofits as envisioned, or predicted savings greater than would normally be considered reasonable.

2. ECO's (Energy Conservation Opportunities) that by themselves could not qualify as cost effective had been combined with other ECO's which were predicted to be highly cost effective and justified on a combined basis. In several instances the specifications generated to accomplish the cost effective retrofits did not accomplish the intent of the phase 1 recommendation.

4. Many retrofits were not completely implemented to either the specifications or the phase 1 recommendation.

5. Some "energy conserving" devices not recommended by phase 1 were employed and, as installed and adjusted, increased energy consumption.

6. Some participants insisted on keeping their systems operating on a high energy consuming cycle for the comfort of a few "after hours" personnel.

7. The room temperatures in some schools are being maintained substantially higher than those used in predicting the phase 1 savings.

8. Unsimulated circumstances such as stolen air compressors, school fires, long periods without power due to storms, problems with oil tanks and oil suction lines, and equipment malfunction and failure, contribute to making actual results differ substantially from predicted results.

9. Some savings predicted by phase 1 were to have been based on retrofits implemented by written or verbal "instructions to the operators" which were never given, with a resultant inability to achieve predicted savings.

10. Maintenance in some of the schools has been poor, resulting in both direct and indirect energy waste.

It became clear that the data gathered could not be used to accurately verify the predicted savings attributable to the retrofits, since many retrofits were either not installed according to recommendations or were obviated by bad design, improper maintenance, poor calibration or other problems. By the time these difficulties were sorted out and resolved, a substantial portion of the 78-79 season had elapsed. Thus, the amount of good data acquired during the 78-79 heating season was not statistically sufficient to validate the anticipated savings. The savings shown in the report were, in fact, achieved; however, the final savings are difficult to attribute totally to the goals set by the Program. The savings attributed to the implemented retrofits are not necessarily indicative of the maximum savings possible, since the retrofits had not been properly in place during the full heating season.

Much can be learned from this experience. Very few school systems can afford the costs involved in identifying "cost effective Energy Conservation Opportunities" in the manner used by this program. Better results than those achieved by this program are needed. Most of the retrofits employed in this program, and some that were not recommended by this study, can be very cost effective if properly implemented. It is possible to implement minimum capital improvement or even no-cost operational changes, which may result in substantial energy and commensurate cost savings.*

It is clear that the savings that can be achieved by many school districts from conservation retrofits will not be achieved until the school administration takes the necessary steps to educate existing personnel, or to employ competent professional maintenance and design personnel. The higher salaries demanded by a professional staff can be considered a good investment since the effects of their work will be repaid many times over if their recommendations are competent and the work is done in a professional way.

If energy conservation of a magnitude approaching the potential is to be accomplished by the schools of America, a simple ECO identification and implementation method must be found. It is to this end that the authors hope the information contained in the balance of this report will be useful to school administrators, plant engineers, consultant design engineers and government policy makers.

Portions of this report are somewhat technical in nature and may, at first reading, be difficult to understand. To those readers with non-technical backgrounds, we recommend consultation with persons within their organizations who are familiar with mechanical systems in buildings. For example, a school

---

*Contingent fee contracts based upon energy savings, which are frequently entered into by firms and individuals active in the conservation area, often result in an excessive fee to the person or firm recommending the relatively low-cost operational or maintenance changes that result in substantial energy savings. It is considered better for a school district or building owner to take these substantial savings and reinvest them in more capital intensive, longer term payback energy retrofits.

administrator may benefit from the counsel obtained from the Superintendent of Buildings and Grounds for the school system. The conservation measures discussed represent standard engineering practices; however, it is important that the operation, design and systems of the individual school be taken into account.

Finally, it should be noted that, for the most part, the personnel in the participating schools gave full cooperation to this program and were dedicated to the common goal.

Chapter 1

INTRODUCTION

The objective of the "Saving Schoolhouse Energy" Program was to generate information that school administrators and federal energy/education decision makers could use to identify ways of implementing specific, economical remedies to reduce energy waste in schools. This program was designed to have five phases:

1) Conduct an energy audit of ten "typical" elementary schools in various locations to identify energy conservation opportunities with an attractive payback period.

2) Design the selected retrofit modifications for these schools.

3) Install the retrofit modifications and verify their installation.

4) Monitor the energy use of the buildings after retrofit and compare with the energy use prior to modification.

5) Develop a plan to disseminate the information to school districts and others interested in energy conservation.

The American Association of School Administrators (AASA) with funding from the Federal Energy Administration (FEA) initiated the "Saving Schoolhouse Energy" Project in early 1976. AASA completed the phase 1 audit in May 1977. Lawrence Berkeley Laboratory (LBL) was then selected by the Energy Research and Development Administration (ERDA) to conduct the remaining phases of the program. LBL contracted with AASA to accomplish phases 2 and 3. LBL was the prime contractor and had responsibility to develop the phase 4 monitoring system, and to analyze the effectiveness of the installed retrofits.

AASA used the following criteria for selecting schools for the program:

1) Type of structure

2) Predictable consistent usage patterns after modification

3) Building life expectancy

4) Building size

5) Student enrollment

6) Available energy consumption data

7) Expected energy savings as predicted through the use of the Public Schools Energy Conservation Services (PSECS)* computer program

8) Typical schools, not "bad examples"

The schools selected range in size from 27,610 square feet to 49,314 square feet; six of the schools have original structures that were built from 1949 to 1954; the others were originally built in 1925, 1965, and 1973. The number of students ranges from 300 to 559. The walls of the schools range from 5% to 50% glass. The heat loss coefficients (U) of the schools' walls range from .08 Btu/hr/ft^2/^{o} F to .40 Btu/hr/ft^2/^{o} F; the U value of the roofs ranges from .10 Btu/hr/ft^2/^{o} F to .34 Btu/hr/ft^2/^{o} F. Six of the schools use unit ventilators; two use central air handlers; one, heated with radiators alone, gets outside air by infiltration only. One school is centrally air conditioned. All nine schools are heated by boilers; some of the schools also use radiators, cabinet heaters, convectors, or hot water converters. One of the schools has a rooftop air conditioning unit for a new addition office area, as well as two window air conditioners; another school has nine window air conditioners. (For a detailed description of the schools' physical plants and their HVAC systems see Appendix 1.

The retrofits recommended most often in phase 1 were:

1) reducing outside air

2) increasing boiler efficiency

3) installing temperature setback systems for lowering temperature during unoccupied periods.

Most of the retrofit costs were federally funded; however, school districts did pay from 10%-15% of the cost of retrofit installation plus the cost of design fees, where required. Also, AASA solicited material and/or labor donations for school districts, e.g., energy efficient fluorescent lights and insulation. The combined non-government contributions were equivalent to approximately 25% of the total retrofit costs.

To measure the results achieved by the retrofits, all schools were monitored manually and, in addition, a computer based data acquisition system was installed at the three schools. In all cases, utility records were used.

---

*The "Energy Conservation Opportunities" identified by the PSECS program differed substantially from those found to be "cost effective" by the commercial computer programs used by the consultants who conducted the phase 1 energy audits of the schools.

Chapter 2

SELECTION OF ENERGY CONSERVATION RETROFITS

Under phase 1, each school was given a thorough and comprehensive engineering analysis by a reputable consulting engineering firm in order to identify cost effective Energy Conserving Opportunities (ECO's). Past energy consumption, the physical characteristics of the building, the condition of the building and mechanical system, and use patterns of the building and mechanical system were individually determined by site inspections, interviews with owners and operators and by a plan and specification review.

Next, each school's operating characteristics were simulated on a computer employing either of two commercially available proprietary computer programs. The computer simulation was then analyzed to identify ECO's.*

After identifying the ECO's, a cost analysis was performed to determine the cost effectiveness of each. An ECO was considered cost effective if the cost of investment could be recovered by energy savings within twelve years, assuming fuel costs escalate 10 % per year, with interest rate adjustments. Table 1 lists recommended cost effective ECO's.

ECO's identified as cost effective were implemented in various ways. In some instances, an architecture/engineering (A/E) firm was employed to prepare bidding documents for all or part of the retrofits. In other cases, the design and bidding phases were handled informally; the school administrators or their staff personnel dealt directly with the contractors. In all cases, the design and physical installation of retrofits were inspected and approved by at least one engineer.

---

*At a later date, the new DOE-1 computer program was tested against the results obtained rom the proprietary computer programs. The results are presented in LBL publication #8449 entitled, "DOE-1 Simulations of Ten Elementary Schools: Base Case Reports."

TABLE - 1. ENERGY CONSERVATION OPPORTUNITIES.

SCHOOL NUMBER	REDUCE O.S.A. (Increase OSA to Code*)	IMPROVE BOILER EFFICIENCY (Change Fuel*)	NIGHT SETBACK	INSULATE ROOF	LOWER THERMOSTAT SETTINGS	STOP EXHAUST DURING UNOCCUPIED PERIODS	RESET HEATING MEDIUM TEMPERATURE	REDUCE (Summer-Shutdown) EQUIPMENT OPERATING TIME	RESET AIR TEMPERATURE	PREVENT ATTIC VENTILATION IN WINTER	IMPROVE LIGHTING USAGE SCHEDULE	INSTALL ENERGY EFFICIENT LIGHTING FIXTURES	WINDOW AREA	AUTO BOILER CONTROL	(REDUCE INFILTRATION)	REPORTED DATE OF RETROFIT COMPLETION
1	o	o		o				o								5/78
2	o	o		o	o					o					o	11/78
3	o	o														5/78
4	o	o	o			o	o	o								11/78
5														o	P	4/78
6			o			o			o							12/77
7	o	o	o			o										6/78
8	o							o	o		o					6/78
9			o	o	o	P						o	o			1/78

P = Proposed but not implemented

Chapter 3

MONITORING OF ENERGY USE

The objective of monitoring energy use was to determine actual energy savings resulting from the retrofits. Savings at each school were calculated by comparing monthly electricity and heating fuel use before and after the retrofits were installed. This procedure was called "manual monitoring," and was used at all nine schools.

Detailed monitoring systems were also installed at three of the schools. Microprocessor-based systems sampled instantaneous values and calculated hourly average values for heating fuel and electricity use, temperatures, heating medium flow rates, and heat transmission throughout the building. The detailed monitoring was intended to help define the actual savings due to individual retrofits, to better understand the patterns of energy use at the three schools, and to evaluate the effects of experimental changes in school plant operation.

Manual Monitoring

Using the manual monitoring data, monthly electricity and heating fuel use were compared for periods before and after the retrofits were installed. This comparison indicated the combined benefit of the retrofits to each school.

The procedure worked quite smoothly and inaccurate readings were rare. However, several problems occurred. These included:

1) Irregular meter reading dates by the utilities in past years. Year-to-year differences in meter reading periods made month-to-month comparisons of savings difficult in some cases.

2) Failures of fuel oil flow meters. Heating oil flow meters were installed at the four schools using fuel oil for full back-up heating. Flow meter failures occurred at two of these schools. "Stick" fuel tank readings were used to supplement the oil flow meter readings.

3) Lack of precision in determining base year oil consumption from oil delivery records at two of the schools.

These problems did not significantly affect the overall accuracy of the manual monitoring results.

The manual monitoring procedure involved three basic steps:

1) Past energy use data were collected, based on monthly utility records.

2) Utility meter readings were taken manually every two weeks during the 1978-79 school year. The readings were made by school district personnel and sent to Lawrence Berkeley Laboratory. LBL cross checked these manual readings with the utility bills for the same time period.

3) At LBL, monthly electricity and heating fuel use after retrofit installation were compared with energy consumption for the corresponding month in the base year (the year used in phase 1 predictions) and in the year prior to installation. The heating fuel use comparisons included degree day corrections for year-to-year temperature differences.

Detailed Monitoring

Thirty to forty points were monitored at each of two schools. Over 90 data points were monitored at the third school.

The basic objectives of the detailed monitoring were to:

1) Help to check for correct retrofit operation.

2) Help to define the benefit of each individual retrofit.

3) More fully understand the actual school operation.

4) Define building energy use patterns.

The three schools were chosen because together they included examples of the major retrofit types used in this program. A summary of the building characteristics and the installed retrofits at each of these schools is presented in Table 2.

Parameters Monitored

At the two schools with fewer sensors, the monitored values included heat input and temperatures in two classrooms, heating fuel and electricity use by the entire building, heat output from the boiler, and pump and ventilation fan on/off status. Outside air temperature, wind speed, and wind direction were also monitored at both schools. In addition, the surface temperature difference through the roof and heat flows through insulated and uninsulated window panels were monitored at one of the schools which had been retrofitted with insulation on the roof and on 30% of the existing glass area.

At the third school, additional sensors were added to more completely define temperatures throughout the school, to monitor door and window opening, and to measure meteorological and solar parameters in more detail. This school, comprised of two buildings, was chosen for more comprehensive monitoring because the nature of its construction provided a potential for comparing two different structures. Its original building is a two story masonry building, built in 1949, with 22% glass area; an addition, built in 1955, is of steel frame construction with a 58% glass area.

TABLE 2. INSTRUMENTED SCHOOL DESCRIPTION

	SCHOOL #4	SCHOOL #6	SCHOOL #9
Size	42,765 ft^2	32,029 ft^2	40,124 ft^2
Year Built	1949, 1955 Addition	1954, 1955 Addition	1957
Number of Students & Staff	Students: 475 (K-6) Staff: 30	Students: 300 (k-6) Staff: 25	Students: 503 Staff: 35
School Hours	8:45 am - 3:15 pm	8:40 am - 2:40 pm	9:00 am - 3:15 pm
Construction	Original Structure (1949) 23,500 ft^2, 3 stories; Walls: Face brick on concrete block. Roof: Built-up, insulation board on steel deck. Addition: (1955) 19,200 ft^2, 1 story walls: Face brick on concrete block Roof: Built-up on Tectum panels.	Original Structure and addition: Single story. Walls: Face brick, file, and concrete block, 32% glass. Roof: Built-up on cedar wood deck, part of roof with added insulating board.	Single Story Walls: Face brick and concrete block. 50% glass. Roof: Steel deck, rigid insulation, built-up roofing.
Lighting	Fluorescent	Fluorescent	Incandescent (before retrofit) Fluorescent and H. P. Sodium (after retrofit)
Heating and Ventilation	Unit ventilators. Steam in original building, water in addition. 2 gas-fired boilers.	Hot water baseboard heating, 4 central air handling units for heating and ventilating two gas/oil hot water boilers.	Hot water unit ventilators. One gas-fired hot water boiler.
Typical annual Degree-days	5700	6100	5200
Typical heating Fuel use (before retrofit) Btu/hr/Ft^2 Degree-day	28	11	15

TABLE - 3. RETROFITS AT INSTRUMENTED SCHOOLS.

SCHOOL NUMBER	REDUCE O.S.A. (Increase OSA to Code*)	IMPROVE BOILER EFFICIENCY (Change Fuel*)	NIGHT SETBACK	INSULATE ROOF	LOWER THERMOSTAT SETTINGS	STOP EXHAUST DURING UNOCCUPIED PERIODS	RESET HEATING MEDIUM TEMPERATURE	REDUCE (summer-shutdown) EQUIPMENT OPERATING TIME	RESET AIR TEMPERATURE	PREVENT ATTIC VENTILATION IN WINTER	IMPROVE LIGHTING USAGE SCHEDULE	INSTALL ENERGY EFFICIENT LIGHTING FIXTURES	WINDOW AREA	AUTO BOILER CONTROL	(REDUCE INFILTRATION)	REPORTED DATE OF RETROFIT COMPLETION
4	o	o*	o			o	o	o								11/78
6			o			o			o							12/77
9	o*		o	o	o	P						o	o			11/78

P = proposed, but not implemented

Sensors

Thermilinear probes were used for sensing water and air temperatures in the school. Classroom temperatures were monitored by four temperature sensors arranged between the floor and the ceiling. Normally, the average of the four sensors was used; room temperature stratification of less than $3^{o}F$ was typical.

Outside air temperature, wind speed, and wind direction were measured with a commercially available weather station installed on the roofs of the schools. In the more complex system, the weather station also measured the dew point temperature and precipitation. Insolation (amount of sunlight) at this site was measured by a precision solar pyranometer.

Water flows were measured by positive displacement flowmeters ranging from 5/8 inch to 6 inch pipe size. Gas and electricity was monitored through pulsers installed on the utility meters. At one school, heating oil use was monitored by positive displacement flow meters in the oil supply and return lines leading to and from the oil tank.

Data Collection System

The data collection hardware at each school was controlled by a microprocessor. The microprocessor "read" the value of each of the sensors once every 5 seconds, and the cumulative sums of these values during an hour were stored in the microprocessor. At the end of each hour, the hourly average of each sensor value was calculated, as well as a measure of the sensor's deviation from the average during each hour.

These hourly averages and values were stored in the memory of the microprocessor at the schools. Periodically, the data were transferred by phone line from the microprocessor at each of the three schools to LBL. These data were transferred to off line storage accessible by the main computer system at Lawrence Berkeley Laboratory and were available for more detailed analysis.

Information Gained from Detailed Monitoring and Experimental Changes.

The detailed monitoring produced information helpful to understanding the differences between the actual energy savings and the predicted energy savings (a topic which will be explored in depth in Chapter 5) and permitted some indication of the energy saving contribution of several individual retrofits installed at each of these schools. The usefulness of the accumulated data was compromised by problems which included:

1. Operational variances within the spaces of a given school. Thus, the temperatures, flows and system operation observed in the monitored spaces were not necessarily representative of the entire system in that school.

2. Failure of data acquisition hardware. Failure of flow meters and temperature sensors and, in one case, frequent total Detailed Monitoring System (DMS) shutdown interrupted the flow of usable data.

3. Time and distance. Delayed completion of the retrofits limited the time during which meaningful data could be gathered. Delays were also realized in getting the DMS's reliably operational. Then delays in receiving and analyzing data coupled with the distance between LBL and the monitored site made discovery, verification and correction of problems difficult.

The above problems, weather variations and the fact that this monitoring was conducted remotely for occupied buildings made it extremely difficult to conduct a precise, controlled analysis of the benefits derived from individual retrofits and operational changes. However, by analyzing and comparing data from relatively long time periods, consistent trends were observed and defined. While the information gathered is not precise, it nonetheless gives a general indication of the energy savings produced by some individual retrofits and operational changes at the three schools.

Before the retrofits were installed, the average daily energy use at the three schools over the 273 days between September 1 and June 1 ranged from 93 to 300 therms of heating fuel, and from 490 to 990 kilowatt hours of electricity per day. At a heating fuel cost of 30¢/therm and an electrical energy cost of 4¢/kWh, the average daily energy costs would have ranged from $48.00 to $204.00.

Information obtained from the detailed monitoring at the three schools indicates that

1. The "night setback" retrofit (involving operating with lower thermostat settings and without ventilation during non-school hours) was not well implemented at two of the three schools, thus the resulting energy savings attributable to this retrofit were less than anticipated. For example, on weekends and holidays these two schools used more than 90% of the fuel used on schooldays. At the third school, where "night setback" was to 60°F and was properly implemented, the weekend and holiday fuel use was reduced to 70-80% of schoolday use.

2. Shutdown of the boiler and hot water heating circulating pumps during periods of moderate weather (typically less than 25 degree days) was accomplished at two schools. This shutdown operation was particularly effective at the school where the "night setback" retrofit was not well implemented. At this school the heating fuel savings due to boiler (and pump) shutdown were approximately twice those realized at the other school with properly implemented night setback.

   Observed energy savings produced by this retrofit ranged from 50 to 100 therms per day of heating fuel and 100 KWH of electricity. Using the energy costs previously stated, the daily dollar savings ranged from $18.00 to $33.00.

3. At school #9, the addition of 2" of roof insulation (reducing the roof "U" value from 0.12 to 0.08) resulted in an observed fuel use savings of approximately 10%.

4. At school #9, 2540 ft.^{2} of window glass (about 30% of the total glass area) was covered with insulating panels ("U" of 0.18). The observed fuel savings produced by this retrofit was approximately 7%.

5. Outside air temperature (degree days) was the overriding weather influence on heating fuel use at the schools. Electricity use was not clearly dependent on degree days, except where boiler and pump shutdown occurred during warmer weather.

6. Wind speed was demonstrated to have a significant impact upon heating fuel use on school days, but not on non-schooldays. Based on results from two of the schools, a wind speed increase of 10 miles/hour caused a 25% increase in heating fuel consumption during a schoolday. This increased school day fuel usage is related to door (and possibly window) openings that occur when the school is in operation.

7. Outside door use was monitored at schools #4 and 6. Typical "open" time for main outside doors was from 1/2 to 1 hour per schoolday. Average use of all outside doors ranged from 1/10 to 1/4 hour daily per door.

8. At school #4, the heating fuel use on cloudy days was typically 10-15% greater than on sunny days.

9. At school #6, adding turbulators to a single, well maintained boiler produced an observed 2-3% boiler efficiency increase.

10. Also at school #6, heat input to the two monitored classrooms was reduced at least 15% by the addition of an inside plastic covering to the windows in the classrooms.

11. Lighting accounted for half to three quarters of the elecricity use at the three schools.

12. At school #9, the replacement of the existing incandescent lamps with high-efficiency fluorescent and high pressure sodium lamps resulted in overall electricity savings of 31%. The savings in electricity for lighting in individual classrooms was approximately 40%. Increased lighting levels were reported in this school after the new lamps were installed.

Chapter 4

RESULTS

After the 1973 oil crisis, many school systems initiated their own conservation plans, with varying degrees of success. Historical energy use at the schools observed was evaluated in light of existing conservation programs (many of which were diminishing at the time this program was undertaken). In this evaluation, energy use since the time of the oil embargo, and energy use before and after the retrofits were installed, were compared for all of the schools together and for each school individually.

Year-to-year totals of actual heating fuel use are presented in Figure 1A. Corrections were made for yearly differences in heating degree days. This comparison shows a 15% reduction in heating fuel use between the 1974-75 school year and the 1976-77 school year. This decrease was due to energy conserving actions taken by the school districts prior to the installation of any of the retrofits of this program.

Between the 1976-77 school year and the 1978-79 school year, an additional 17% decrease in school heating fuel consumption occurred. This decrease was due to the retrofits as installed. At three of the schools, retrofit installation was substantially completed during the 1977-78 school year. At the remaining six schools, the retrofit installations were substantially completed during the summer and fall of the 1978-79 school year.

Year-to-year totals of electricity use are presented in Figure 1B. Between the 1974-75 and the 1976-77 school years, before the retrofits were installed, energy conservation actions achieved a 15% savings in electricity. Between the 1976-77 and the 1978-79 school year, electricity consumption was reduced by an additional 3%.

A school-by-school review of historical energy use is shown in Figure 2. Heating fuel use is shown in Figure 2A for each of the schools (in Btu per degree day per square foot, Btu/DD/ft.^{2}). At the four schools with the highest annual heating fuel consumption (20 Btu/DD/ft.^{2} or greater) reductions in fuel use were made by the school district personnel before the retrofits of this program were installed. At two of the remaining five schools, heating fuel increases occurred. Heating fuel savings occurred at six of the nine schools after the retrofits were installed.

Electricity use is shown in Figure 2B on a kilowatt-hour per square foot basis. Before the retrofits were installed, significant electricity savings had already been accomplished at four of the nine schools. The two schools with annual electricity use above 5 kWh/ft.^{2} showed electricity reductions during this period.

After the retrofits were installed electrical energy consumption was further reduced at two of the four schools having significant pre-retrofit savings. One school which had been increasing electrical energy use before retrofits, reversed this trend after retrofits were installed. The other six schools had no post retrofit savings or had increased electrical energy use

FIGURE 1. HISTORICAL ENERGY USE

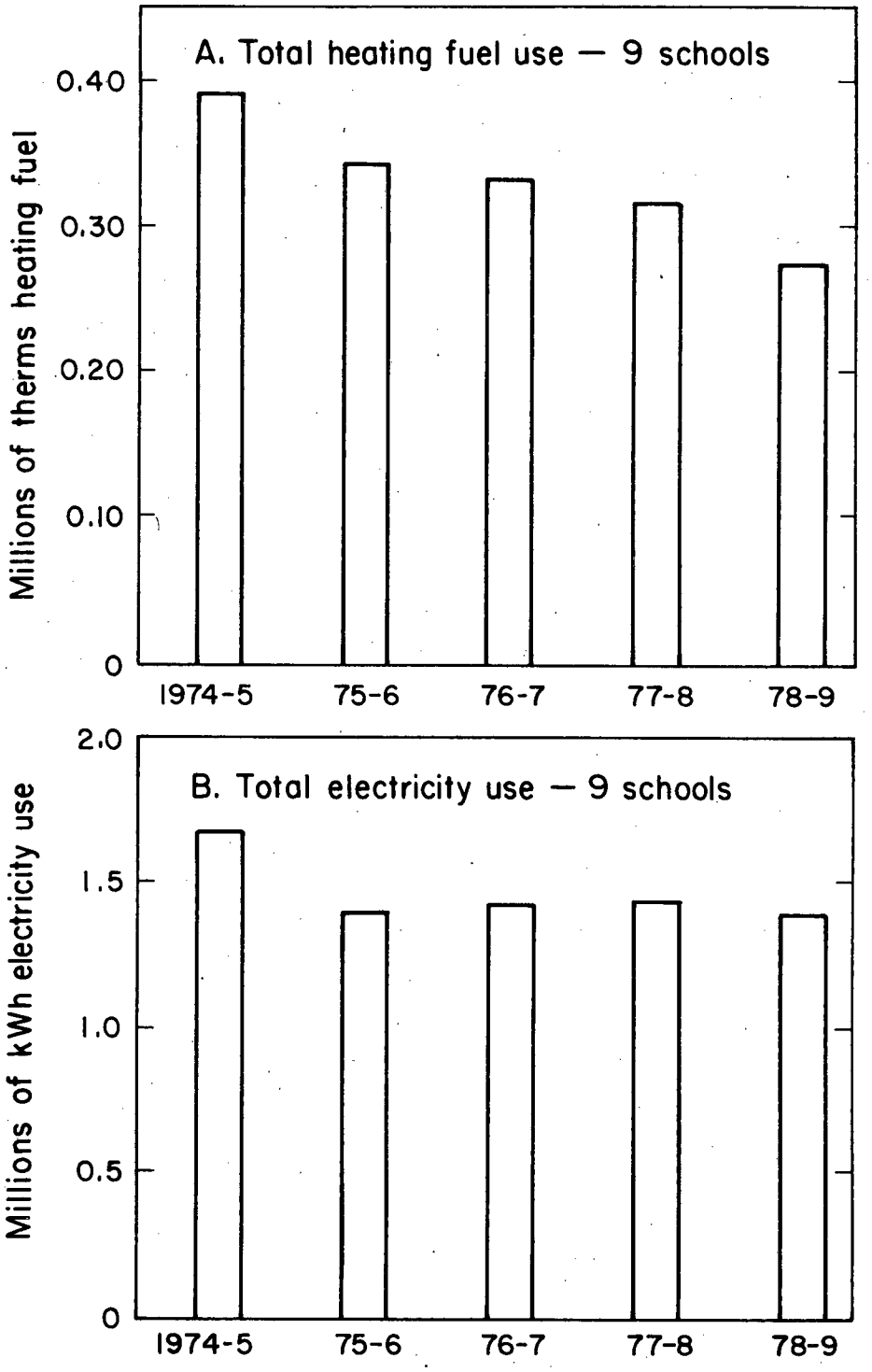

XBL 799-2753

FIGURE 2. HISTORICAL ENERGY USE FOR INDIVIDUAL SCHOOLS.

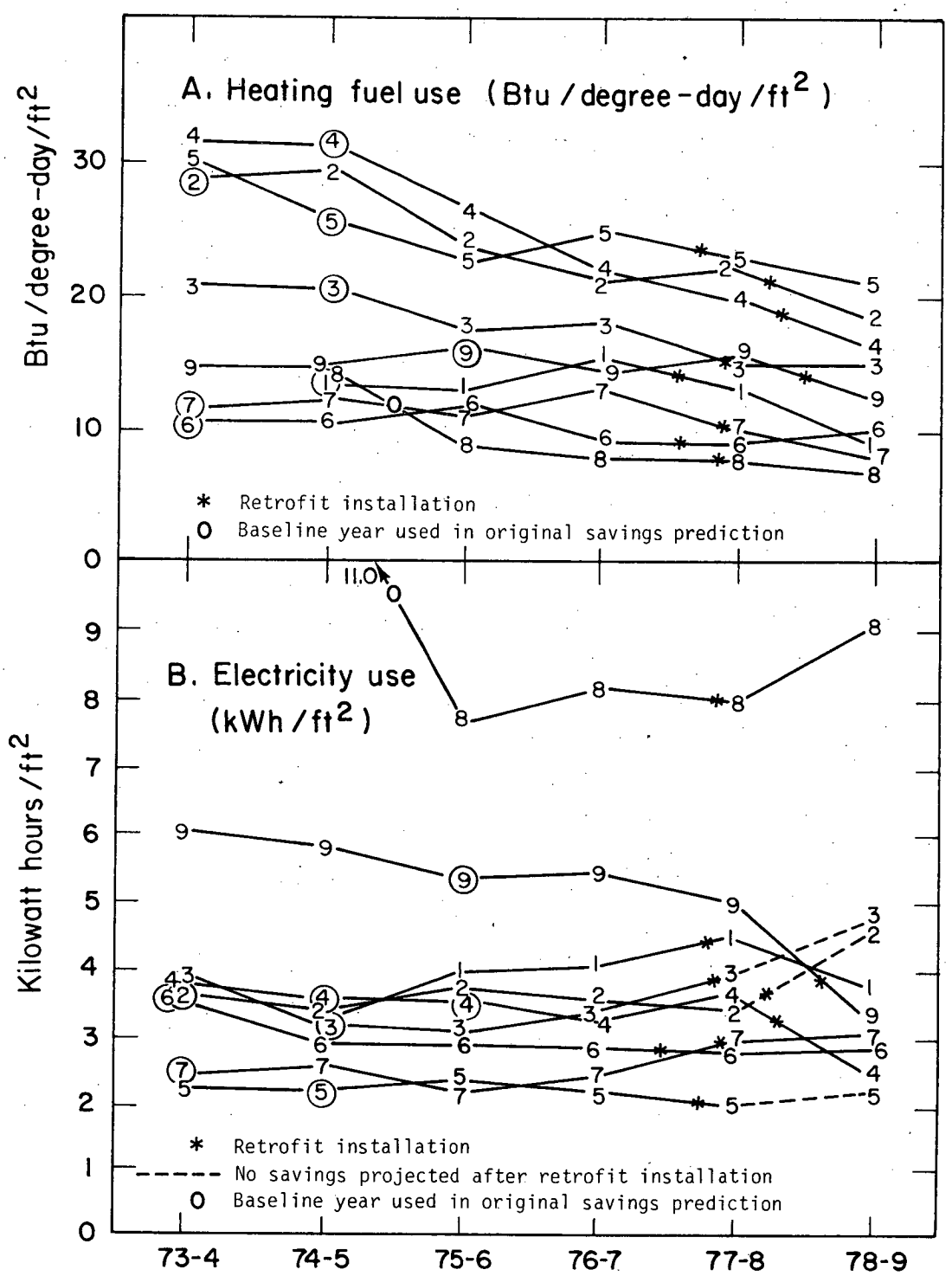

XBL 799-2752

after retrofit.

Actual vs. Projected Savings

The total savings at all of the schools were compared to predicted savings. This comparison, shown in Table 4, is based on savings accruing after the dates the retrofits were reported to be complete.

Table 4A shows that if the predicted savings at all of the schools had been realized, the overall heating fuel savings would have been 37% and the overall electricity savings would have been 18%.

If the actual savings are based on the "baseline year" used in the original savings predictions (the 1973-74, 74-75 or 75-76 school year, depending on the school) the actual savings were 28% for heating fuel and 4% for electricity. Note that these "actual savings" values include the combined benefits of the "Saving Schoolhouse Energy" retrofits and independent changes made by the school district personnel on thei own, after the "baseline year." In some cases the retrofits automated the manual energy conserving procedures already instituted by the schools.

To more closely approximate the direct benefits of the "Saving Schoolhouse Energy" retrofits alone, these "total savings" values were re-computed based on the year before the retrofits were installed. This way, the benefits of the changes made by the district personnel between the "baseline year" and the "year before retrofit" are at least partially removed from the total savings values. Based on the "year before retrofit," a 15% savings in heating fuel was achieved, and electricity showed no change.

A school-by-school breakdown of actual vs. predicted savings is shown in Table 4B. The reasons for the differences between the actual and predicted savings are discussed in Section 5.

TABLE 4. PREDICTED vs. ACTUAL SAVINGS
(THROUGH THE 1978-79 SCHOOL YEAR)

A. TOTAL SAVINGS DUE TO RETROFITS - 9 SCHOOLS

Basis of Savings	Heating Fuel+ Savings, %	Electricity Savings, %
A. Originally predicted savings in energy audit	37%	18%
B. Actual savings - based on baseline year of original energy audit predictions	28%	4%
C. Actual savings - based on year before retrofit	15%	0.4%

B. SAVINGS DUE TO RETROFITS - INDIVIDUAL SCHOOLS

School Number	Heating Fuel Savings+			Electricity Savings		
	originally predicted	Actual (Basis "B")	Actual (Basis "C")	Originally Predicted	Actual (Basis "B")	Actual (Basis "C")
1	49%	31%	35%	14%	*	*
2	41%	36%	20%	N.C.	*	*
3	28%	19%	11%	N.C.	*	*
4	57%	44%	20%	30%	8%	*
5	18%	18%	3%	N.C.	0%	*
6	29%	10%	-2%	35%	22%	6%
7	33%	29%	33%	15%	*	6%
8	50%	32%	11%	18%	15%	*
9	54%	21%	14%	43%	38%	29%

+ Corrected for year-to-year degree day differences

* Electricity use increase

N.C. - No Change.

Chapter 5

WHY ACTUAL RESULTS DIFFER FROM PREDICTED RESULTS

It was envisioned that the energy conserving retrofits would have been installed before the 77-78 heating season. This was not the case. As shown in Table 1, only one school reported its phase 1 retrofits completed for a major part of the 77-78 heating season. Two other schools had their retrofits substantially completed before the end of the 77-78 season. Most schools did not report their retrofits complete until the summer of '78; some were as late as mid-November '78. This late completion of the retrofits precluded the data collection necessary for analysis of retrofit results for essentially all of the 77-78 heating season and for a substantial portion of the 78-79 heating season.

There is a time lag inherent in data monitoring. For sites monitored manually, there was a delay in receiving utility bills and meter readings and a further delay in normalizing and evaluating the data. For computer-monitored facilities, there were also delays in debugging the data acquisition system, in transmitting the accumulated raw data, in converting the raw data to usable information, and in the evaluation of that information.

At the outset, some of the projected savings were questionable. For example, one phase 1 report predicted that a large savings of electric power could be effected by lowering the temperature of the air leaving hot water heated air handlers. This predicted power savings can not be justified. In another phase 1 report a very large savings was attributed to a night setback retrofit even though the investigating engineer expressed doubt that a savings of such magnitude could be achieved. This engineer chose to stay with the prediction after rechecking his inputs to the computer program, even though the prediction did not seem reasonable to him (or to us). This experience points out the validity of questioning the output of a computer when such output appears unreasonable.

Comparing energy consumption on a degree day basis has certain limitations since, for any given day, the degree day figure is the difference between the average, or mean, temperature for that day and 65°F. Variables which also have an impact upon fuel consumption, such as amount and intensity of sunlight and wind velocity and direction, are not taken into consideration. Since there is no other readily usable basis for comparison, it is fortunate that the magnitude of error will be less when comparing the number of degree days for various years at any given site than when comparing degree days at two different sites. Abnormal weather patterns at any given site can lead to erroneous conclusions when using the degree day basis for comparison.

When the monitored results demonstrated that the actual savings attributable to phase 1 retrofits almost universally did not approximate those anticipated by the original engineering studies, it was deemed essential to conduct on-site investigations to determine the cause or causes of these discrepancies.

The findings of these investigations were both positive and negative. There were several instances where additional "energy-saving" actions had been taken (some of which proved to be counter-productive). There were many instances where the original cost-effective ECO's had not been effectively implemented or had been rendered inoperative by the operators of the building (in at least one instance, for valid reasons). In addition, there were many unforeseen circumstances developing during the school year that had a considerable impact upon energy consumption. For example, one school had a fire which necessitated operating the school on a full ventilation-occupied cycle for two days to remove the smoke odor. At the same school, the temperature control air compressor was stolen (exactly when is not known), causing the system to be operated on an uncontrolled full heating cycle for an undetermined period of time. At another school, the time switch that changes the control system from its occupied temperature cycle to unoccupied temperature cycle malfunctioned and, for a period of unknown duration, maintained the higher temperature with full ventilation air both day and night.

In most instances, the people at the schools were conscientiously trying to conserve energy and to cooperate with the energy conservation experts.

It is reasonable to assume that, had the recommended ECO's been effectively implemented, the retrofitted systems been maintained in proper working condition and operated as anticipated by the recommended ECO's, fuel savings more nearly approximating those predicted would have been achieved. To fully understand why the results do not measure up to the expectations, it is necessary to look at the individual ECO's as they were conceived, how they were implemented and how system operation differs from that anticipated.

The ECO's are discussed in descending order, beginning with the most frequently recommended retrofit.

<u>REDUCE OUTSIDE AIR</u>: Recommended for six systems, (five of which are equipped with unit ventilators). In a sixth unit ventilator school, which historically taped the outside air intakes closed, the recommendation was to increase the outside air to satisfy code requirements.

The outside air considered here is "minimum" outside air. Minimum outside air is that quantity of outside air introduced by the unit ventilator when the temperature of the room served is at room thermostat setting. The control cycle used at the schools in this program, and in most schools, was intended to operate as follows: the outside air damper is to remain closed until warmup is completed, when it opens to its preset "minimum" position. If the room temperature increases above the room thermostat setting, all heating ceases and additional outside air, up to 100%, will be introduced into the room. To insure that air cannot enter the room at too cold a temperature a "low limit" unit ventilator temperature discharge controller intercepts the cooling signal from the room thermostat and provides a limit to the lowest temperature discharged to the unit.

Dampers in a unit ventilator do not lend themselves to precise control of outside air, since the amount of air introduced does not depend solely on the position of the damper, and the positioning of the damper may vary due to other problems with the system. Any damper position will admit quantities of outside air which will depend upon the relative static pressures within and

outside the building, upon wind direction and velocity, and upon filter cleanliness. These dampers also depend on sealing strips (usually felt), and damper motor force to effect a reasonably leak-proof barrier to outside air entry when the damper is closed.

In three of the retrofitted unit ventilator equipped schools, the post retrofit percentage of unit ventilators having damper-related malfunction or maladjustment varied from approximately 50% to nearly 100%. Damper blades and crank arms were found loose on their shafts. Damper operators, even those newly installed, did not effectively close the outside air dampers. In many cases, the sealing strips were not in place. The penalty of the above malfunctions and defects can be total lack of control of outside air during the occupied cycle and the introduction of large quantities of unwanted outside air during the unoccupied cycle of the building. In addition, damper malfunction or maladjustment can contribute to freezing of the heating coil within the unit ventilator.

In one school, the intended control cycle would admit less outside air than the code required, even if the dampers had been capable of unimpeded operation, and also inhibited the full 100% outside air cooling cycle. The specification to accomplish the retrofit for another school prescribed outside air quantities in excess of the code requirements stated in the phase 1 report. The authors are unaware of any reason for this action.

In three other schools where the classroom unit ventilators appeared to be operating properly, with approximately correct minimum outside air, unit ventilators or ventilating units serving non-classroom spaces had not been readjusted to minimum code requirements and were introducing excess outside air into the building. In some instances, these units are used infrequently.

In a school with a central air handler, the toilet exhaust fans expelled a much greater quantity of air from the building than was introduced by the ventilation fans. The higher exhaust rate produced a negative pressure in the building, causing increased infiltration and associated discomfort. In several schools the exhaust fans, which the pre-retrofit engineering analysis envisioned would be stopped during the unoccupied cycle, were not addressed in the retrofit specifications and, as a result, were found to be operating at all times.

Essentially all of the schools are still introducing more outside air into the building than was intended or specified. Some also admit substantial quantities during unoccupied periods when no outside air is to be introduced through the unit ventilators. On paper this retrofit is very cost effective, but in practice it did not achieve target energy savings.

<u>IMPROVE BOILER EFFICIENCY</u>: Recommended for five schools.

Efficiency is defined as the percentage of fuel converted to useful heat. Improving boiler efficiency means that less fuel is wasted in the conversion process. In one school a boiler-burner replacement was recommended in order to take advantage of the then lower cost of oil versus gas at that site - this change was deemed non-energy conserving and was not implemented. In a second school, a new burner was installed in the existing boiler in lieu of the recommended boiler-burner replacement, with no detrimental impact on the

anticipated increase in combustion efficiency. In a third case, new steam boiler-burners were substituted for the recommended new hot water boiler-burners recommended to replace existing steam boilers. This substitution provided the anticipated increase in combustion efficiency but had a minor negative impact on expected overall operating efficiency because of heat losses from the steam piping and converters which would have been eliminated had hot water boilers been used.

For the most part this retrofit has increased the combustion efficiency of the boilers at these schools. There are two notable exceptions, however. The combustion efficiency of the boiler in the school where a recommended replacement was not installed has dropped from a reported 80% to a recently measured 72%, indicating a need for maintenance. The combustion efficiency of a boiler which was retrofitted with a new burner was recently measured to be 63%, down from the 82% measured immediately after retrofit, because of a reported burner readjustment necessitated by an oil suction line problem and because of mechanical problems with the new burners. Correction of the oil suction line problem was delayed until the ground thawed.

As measured in March 79, the overall unweighted average boiler combustion efficiency at full firing rate was 75% at the five schools involved in this retrofit. Anticipated combustion efficiency was 80% plus. Reported efficiency before retrofit was 70%. Therefore, the time of our most recent site inspection this retrofit was saving approximately half of the anticipated amount.

NIGHT SETBACK: Recommended for four schools. In three cases, the night-time or unoccupied temperature was not specified. Also, in three cases, the setback hours were not specified.

It is commonly considered desirable to provide a night setback of approximately 10-15°F less than occupied temperatures. It was assumed that a temperature no higher than 60°F for unoccupied periods was used in the computer simulation to arrive at the predicted energy savings. Further, it was assumed that, in the simulation, the system was presumed to be indexed to occupied temperature somewhat before the normal beginning of classes and to unoccupied temperature at or about the end of the full occupancy school day. It was also assumed that the system remained on the unoccupied cycle for the duration of weekends, holidays and vacation periods.

In three of the schools, we found the night (unoccupied) thermostat set points to be widely variable and nearly universally well above the assumed 60°F target. In some rooms, the night control point was at or above the day setting. Night control points of as high as 80°F were observed, with many in the high 60's to mid 70's.

In two schools, the principal had ordered that the system be kept at full daytime operation in the entire school until 5 p.m. (classes end at 3:15) so that the few people still in the building would be comfortable. Three of the schools were indexed to daytime operation as early as 4:00 a.m. to prepare for classes which start no earlier than 8:30 a.m.

This ECO also assumed that no outside air would be introduced through the ventilation system at night. In two of these schools, the outside air dampers did not close completely (some did not approach closure), thus, a substantial quantity of outside air was introduced during the night cycle of operation.

In one school many of the unit ventilators, cycled to maintain the night temperature, were started during the unoccupied cycle with the heating control valve closed or nearly closed. Specifications did not address this issue. Some of these same units have outside air dampers which never closed completely. The result was that the units were required to operate for longer than necessary "night" cycle time periods while unwanted outside air was also introduced. Once started, most of these unit ventilators never shut off during the remainder of the unoccupied period. In this same school the "old" section of the building has steam unit ventilators with a control cycle which opens the control valves on the unoccupied cycle. This lead to the overheating of several rooms during the unoccupied portion of most of the school year.

In one school, the simulation assumed that the hot water circulating pumps (and presumably the boiler) would be stopped on the unoccupied cycle until the outdoor air temperature dropped below 35°F. The post retrofit unoccupied control system actually employed precluded this energy saving feature.

The elevated temperatures during the night-time or unoccupied cycle, the longer than anticipated occupied temperature cycles, the undesired introduction of outside air, the night operation of toilet exhaust fans, the unnecessary operation of unit ventilator and exhaust fan motors, and the unanticipated additional operation of boilers and pump, all contributed to greater than expected energy use.

STOP EXHAUST DURING UNOCCUPIED PERIODS: recommended for four schools. In two of these schools, all toilet exhaust fans reportedly run continuously. They are not connected to the occupied-unoccupied control cycle.

Exhausting air from a building causes increased infiltration, especially in buildings where the outside air dampers do not close completely during the unoccupied cycle. Increased infiltration increases energy consumption.

INSULATE ROOF: Recommended and implemented for three schools.

There is no doubt that insulation saves energy. There can be considerable doubt that adding insulation to a roof, by and of itself, is "cost effective" as defined by this program. For example, at one of these single story, flat roof schools in a 5300 degree day climate, the justification for insulating 100% of the roof area was based on combining the addition of roof insulation with night setback. In this case, the roof insulation by itself could not qualify as cost effective (based on figures taken directly from the phase I report which recommended it).

REDUCE EQUIPMENT OPERATING TIME: recommended in three schools. The night-setback ECO should also reduce equipment operating time in most cases, but this discussion deals only with three schools where this recommendation was made separately.

In one school the occupied cycle was to be changed from a duration of twelve hours to seven hours. Actual post retrofit operation permitted the occupied cycle to function for as many as ten hours.

In a second school the reduced operation was to be effected manually by the operating personnel. There is no record that the operating personnel were instructed to reduce operating hours and therefore no reduction in operation occurred. Increased activities now require more equipment running time than at the time of the phase I report.

At the third site, this retrofit envisioned discontinuing summer operation of the ventilating system, but did not implement a convenient method of accomplishing this task.

The increase in hours of operation on the occupied cycle for two of the three buildings consumed more energy than estimated.

LOWER THERMOSTAT SETTINGS: recommended for two schools. This retrofit was not totally accomplished in either school. Both schools are equipped with unit ventilators.

Human comfort is a function, not only of dry bulb temperature, but, also of relative humidity, air movement, and mean radiant temperature. Unit ventilators tend to produce substantial air movement within the occupied space, especially in that portion of the space in close proximity to the unit. While 68°F, or lower, may be comfortable under some circumstances, it may not be in a unit ventilator equipped classroom.

It should be noted that the standard unit ventilator control cycle will not permit the space temperature in a classroom to increase appreciably above the temperature set point during those periods of the year when the outside air temperature is low enough to cool the room. Thus, unless the control system is modified to provide a "dead band" in space temperature control, when the space thermostat is set for an energy saving (but uncomfortable) 65°F +2°F, the control system will prohibit allowing the space to float to a more comfortable higher temperature resulting from the free heat due to internal heat gains. It will instead introduce cold outside air to cool the classroom to about 67°F.

Actual space temperatures maintained in these two schools at the time of inspection were in the mid to upper 70's. Since the room temperatures were not lowered as anticipated by this ECO, these schools are saving less energy than projected.

RESET HEATING MEDIUM (HOT WATER) TEMPERATURE: recommended in one school, installed or reconditioned in four schools.

This energy conserving feature, installed in more buildings than initially recommended, will tend to produce a somewhat greater than anticipated energy savings.

RESET SUPPLY AIR TEMPERATURE: recommended in two schools.

Operating one of these systems as recommended by this retrofit, as implemented by the specification generated for its accomplishment, and as accomplished by the contractor would lead to occupant discomfort during most of the operating season. Internal loads require air temperatures lower than specified for most of the operating season.

At the second site, leakage through the face dampers within the air handling units and heat exchange around them, made attaining the temperature goal impossible without introducing excess outside air. The function of some of the units also precludes the operation specified in this retrofit since two units provide the heating for dedicated spaces and must respond to the needs of these spaces.

The net effect on anticipated savings is negative.

PREVENT ATTIC VENTILATION DURING WINTER: recommended for one school.

This retrofit was not implemented.

IMPROVE LIGHTING USE SCHEDULE: recommended for one school.

Implementation was to have been accomplished by instruction of building users. Building use now requires more periods of lighting use than when initially surveyed. The lights are not turned off to the extent anticipated by this retrofit during those hours when such action is possible.

INSTALL ENERGY EFFICIENT FLUORESCENT LIGHTING LAMPS AND FIXTURES: recommended for one school, installed in four schools.

The new lamps and fixtures use less energy than the original fluorescent fixtures and substantially less energy than the original incandescent fixtures. The decrease in lighting power consumption in four schools instead of one, lowers energy consumption beyond the predicted level, if increased hours of use does not cancel the increased efficiency.

REDUCE WINDOW AREA: recommended and implemented in one school.

Reducing window area by replacing a glass area with materials having a higher "R" value (lower "U" value) saves energy, but was not "cost effective" as employed in this situation. This retrofit received its justification by being combined with night setback.

AUTO BOILER CONTROL: recommended in one school.

At this site, the boiler was originally permitted, by action of a time clock, to operate to maintain steam pressure between the hours of 4:00 a.m. and 4:00 p.m., seven days per week during the heating season. When cold outdoor temperatures were expected, the operators manually bypassed the time switch to maintain steam pressure 24 hours/day. They reportedly also shut down the boilers in mild weather.

The engineering analysis stipulated that additional controls be employed to reduce the running time of the boiler by tailoring the boiler operation to actual need.

The implementing specification called for a thermostat, sensing outdoor air temperature, to start and stop the boiler. The tentative setting of this thermostat was to be 60°F.

This facility did not save energy at the predicted rate. The school system has reportedly implemented additional energy saving measures. This leads to the conclusion that the boiler control retrofit, as accomplished, did not reduce the boiler operation to the expected extent.

REDUCE INFILTRATION: recommended for one school - not implemented. Lack of implementation has a negative impact upon anticipated energy saving.

Several features, which were not directly called for by any of the recommended retrofits, were added by specification. These are as follows:

OPTIMAL START PROGRAMMERS: employed at four schools.

This device varied the time at which the heating system was indexed from the unoccupied cycle to the occupied cycle (start time). The start time is varied according to outdoor air temperature and a building "U" value simulation to provide a preset "occupancy ready" condition. The "U" factor (Btu/hr/ft^2/°F temperature difference) is a measure of the heat loss rate of the building. Some models of this device have cams determining the earliest possible start time, while others employ a time clock for this function. Cams, when employed, are available for either 2-hour or a 4-hour maximum warmup cycle.

Although not employed in three of the test schools, this device is available with an optional feature providing an output which can be used to insure that ventilation does not occur during the warmup cycle.

This device did not directly account for three important considerations in determining optimum start time: 1) the temperature of the heating medium available to accomplish building warmup, 2) the type of system which will accomplish warmup (i.e., fan driven or convection), and 3) the actual initial temperature within the structure from which warmup must occur. Conscientious calibration of the "U" value input to these devices might partially compensate for some of these variables.

As installed and calibrated in all four schools, these devices caused unneeded operation of the heating systems (wasted energy) during warmup.

STOP HEATING CIRCULATING PUMPS (AND BOILERS) WHEN OUTDOOR TEMPERATURES EXCEED 65°F (60° F): employed in four schools.

This is a logical, and usually easy to accomplish, energy conserving feature. For any system which was not already manually operated in a similar manner, and compatible to this type of operation, this retrofit saves energy.

SERVICE STEAM TRAPS: specified for one school.

Leaking or malfunctioning steam traps are extremely wasteful of energy. A visual inspection, in early March 79, gave no confirmation that this work had been accomplished.

ALLOW ROOM TEMPERATURE TO "FLOAT" from 65°F to 78°F: (A Type of "Dead Band" Control) specified for one school (unit ventilator equipped).

This specification proposed an operational cycle for the unit ventilators that would close the outside air damper at any room temperature below approximately 73°F. Full heating was specified to occur at 65°F room temperature and full free cooling at 78°F. (The equipment installed prohibits the possibility of a full cooling cycle because it is unable to provide a full cooling signal to the outside air damper control.)

There is no doubt that this cycle would conserve energy; however, it violates most existing state ventilation codes (including the state in which the building is located) because it relies upon infiltration to provide ventilation until "free" cooling of the space is required. In actual operation during the occupied cycle, the room temperatures would rarely be below 69°F but would frequently be at, or even above, 78°F. On any given sunny but fairly cool day, some rooms could be at each extreme. While both conditions are within normal human tolerance levels, having both conditions existing simultaneously can lead to occupant complaint as occupants migrate from space to space. It is possible that the following day might be cloudy and cold causing the rooms that were 78°F the day before to be only 69°F. Day-to-day variations also cause discomfort and complaint.

This retrofit was not installed in conformance with the specification. The installed system delayed the "minimum" ventilation cycle until the space requires no heat. Full outside air cooling was also disabled. It should be noted that "dead band" control, properly implemented, can provide comfort and satisfy ventilation codes while conserving energy.

ADDITIONAL RETROFITS.

Phase II retrofits (additional retrofits installed subsequent to the completion of the original retrofits) were installed at one site. They consisted of:

MORNING WARMUP TIMER:

This device restores full heating medium temperature, subject to the ability of the boiler to provide maximum temperature output when handling the warmup load, for a predetermined time period. The purpose of this device was to shorten equipment operating time by providing the capability of a more rapid morning warmup in a "slow to warm up" school.

STOP BOILERS AND HEATING PUMPS ON UNOCCUPIED CYCLE AT OUTDOOR AIR TEMPERATURES ABOVE 40°F:

This retrofit is an energy saver, provided the system was not already manually operated in a similar manner. Since this retrofity was not completed until late March 1979, no analysis is available.

ALLOW VENTILATION ONLY DURING CLASS HOURS:

Prohibiting the introduction of ventilation air during other than the full occupancy period of the school day saves energy during warmup and prevents the introduction of excess outside air to cool the morning warmup overheating that is likely to occur with some types of systems.

The delay in successful accomplishment of the phase II retrofits and the simultaneous correction of basic system inadequacies makes it impossible to assign precise energy conservation values, based upon proven results, to any of these retrofits. Correction of phase I and some phase II retrofit execution errors was accomplished in February and March of 1979. Numerous experiments, requiring abnormal operation, have also limited the base needed for complete results analysis.

In summation, the factors contributing to this program not achieving the predicted energy savings included some instances of over estimating possible savings during the pre-retrofit engineering analysis; instances where the specifications prepared for the retrofits did not precisely describe the retrofit as proposed by the pre-retrofit engineering analysis; instances where the retrofit installation was not in conformance with the specifications for the work; and some instances where the operation of the building negated at least part of the potential savings.

Chapter 6

CONCLUSIONS

Due to legal and procurement difficulties, the retrofits intended to be implemented in the schools during school year 77-78 were not accomplished except in one school, which used its own funds to accomplish the prescribed retrofits. Thus, the 1977-78 heating season did not yield any results on energy savings due to retrofits, except at that one school*.

Completion of the retrofits were not accomplished until mid-November 1978, which meant that in the more severe climates approximately 1/3 of the 1978-79 heating season had passed before data was available for evaluating the effectiveness of retrofits. Several months were required to analyze the data and draw conclusions regarding the retrofits and to verify the observed data with the school operating personnel. When inadequacies in retrofit installation were discovered, either by information gained from evaluating computer output data or on the tour of the sites conducted in February and March of 1979, many installing contractors took the position that their installation was out of warranty, having been accepted more than a year previously. On this basis, they refused to correct the deficiencies discovered during this inspection.

This program, which might be referred to as a pilot program, had many advantages that will probably not exist under the implementation of the National Energy Act. Each school building selected for the pilot program was afforded the luxury of a comprehensive engineering analysis by a competent engineering firm skilled in the art, and was modelled on a computer using established and respected computer programs designed for this service. "Cost effective" ECO's were identified. Retrofits were either designed by Architect-Engineering firms or designed under the supervision of a licensed engineer. A large percentage of the retrofits involved temperature control systems which were modified or installed by national firms advertising themselves as energy conservation specialists. The equipment used was of high quality. The installations were checked and accepted by at least one licensed engineer.

Yet, the results were less than totally satisfactory. Some of the pilot program schools have not been given the energy conserving potential that was intended for them. Others did not reach their goal of satisfactory completion until March of 1979. Another is left with a system that cannot be expected to operate as retrofitted without frequent manual adjustments to achieve reasonable comfort. These adjustments can result in defeating the energy conserving potential of the retrofit.

The goal of the National Energy Act is to conserve the greatest amount of energy possible with the limited funds available. It can not afford a large administration expense. The funds reaching the targets will be passed through the various states and territories, thus making control of the use of the

---

*There, phase II retrofits were recommended based upon the results obtained during the 77-78 heating season.

granted funds more difficult.

Another major problem is apathy. Many people are not convinced that there is an energy problem, are unconcerned about the real and potential negative impact of importing more and more fossil fuels upon the health of our economy, are unwilling to sacrifice any degree of comfort or convenience or, with the cost of energy still being a relative bargain when compared to cost of labor, are unwilling to staff adequately to keep building envelopes or mechanical systems operating efficiently. As an example, in one of the test schools a boiler pressure relief valve has been discharging substantial quantities of 190° water directly to the sewer continuously for more than a month. The maintenance department knows about the problem but either has not been able to invest the time to correct it or has not seen fit to do so. Not only does this malfunction waste a roughly estimated 2,500,000 Btu's each 24-hour period, ($12.50/day at a fuel cost of $0.30/therm) but, it also creates other problems within the system. The water used to replace that which was lost carries air and minerals. The air can cause interruption of flow (which could create a freeze hazard and erratic operation of the heating system) and a deterioration of the system's components. The minerals also have a detrimental impact on the operation and useable life of the system.

Many teachers at the pilot program schools insisted that room temperatures be maintained in the mid to upper 70's.

It would appear that a major reason why the reality of this program did not equal the expectations was that competent participants were too impressed by, and reliant upon, the competence of other qualified participants, and that authority and accountability were not assigned to that segment of participants in the best position to insure results. A participant with ultimate accountability is wise to operate under the assumption that, in the real world, it is essential to become directly involved in order to ensure that one's own best interests are served.

Supplement A

FORMULATING AN ENERGY CONSERVATION PROGRAM FOR YOUR SCHOOL SYSTEM

Part I:

GENERAL

A. Recognition of the Energy Problem by School Administration

a) Energy costs are escalating rapidly while energy availability decreases.

b) Energy use in many school buildings can be reduced 50% or more.

c) The maintenance and teaching staff, the students and their parents, and the community in general must be made aware of the need to conserve energy, even at the expense of some comfort. When all of these groups are made an active part of any energy conservation plan, superior results are obtained.

d) The operators and users of the building and its mechanical system can be major contributors to energy conservation. Turning off lights in unused rooms or the unneeded portion of lighting in occupied rooms; recognizing the need to become acclimated to, and dressing for, reduced room temperatures during the heating season; and recognizing that an entire school facility cannot be heated after class hours for a handful of people, will make real energy savings possible.

e) A comprehensive maintenance program has always been a good investment and is essential to any effective energy conservation program.

f) Saving energy also saves money in ever increasing amounts as energy costs escalate.

Part II:

IS YOUR BASIC HEATING SYSTEM FUNCTIONAL?

Applying energy conservation retrofits to a malfunctioning or nonfunctioning system can create problems and disappointing results.

A. Hot Water Heating Systems. In the 1950's, the trend toward hot water systems accelerated. Many systems were installed in a manner which creates operational problems. Some of the more common problems are:

1. Location of the point of connection to the expansion tank. (Correct and incorrect expansion tank relationships are shown in Figure 2).

   An explanation of the functions of expansion tanks and the problems associated with incorrect location follows.

   a) Water increases in volume as its temperature increases. In a closed piping system an expansion tank, with its cushion of air, provides the space for this expansion. The tank must provide adequate volume to accomodate this expansion without a major change in system pressure.

   b) The point at which the expansion tank connects to the main piping system becomes the point at which the system pressure does not change when the circulating pump starts or stops (provided the piping system is free of air).

   c) Water is, from a practical standpoint, incompressible. Pressure changes do not change the volume of water.

   d) Once a closed system is filled with water, it is not desirable to add water to, or expel water from, the system.

   e) A circulating pump generates a differential pressure, i.e., the pressure at pump discharge is higher than that at the pump suction. For a working system this differential pressure must be equal to the friction loss of the piping system and all of the system's components, when the volume of water needed to convey the required heat is being circulated.

   f) Vertical displacement creates static pressure. If a vertical pipe 10' high is filled with water, it generates a static head (pressure) of 10' of water at the bottom of the pipe. This is equal to 4.33 pounds per square inch (psi). Similarly a pump, which is rated at 10' head at design flow, when pumping design volume of water generates a pressure at its discharge which is 4.33 pounds per square inch greater than the pressure at its suction inlet.

   g) Most hot water boilers used in schools are rated for 30 pounds per square inch internal pressure and are equipped with pressure relief valves that discharge water from the system if the pressure

Figure 2.

CORRECT EXPANSION TANK—PUMP RELATIONSHIP

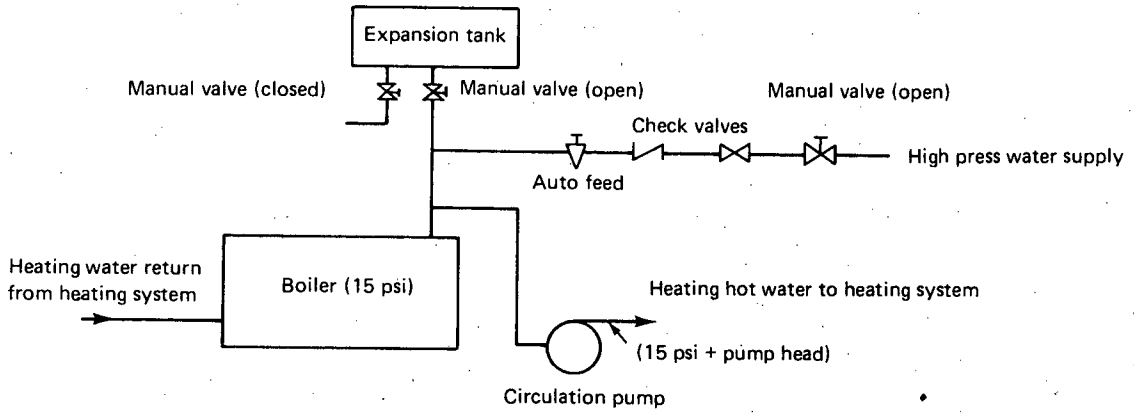

INCORRECT EXPANSION TANK—PUMP RELATIONSHIP

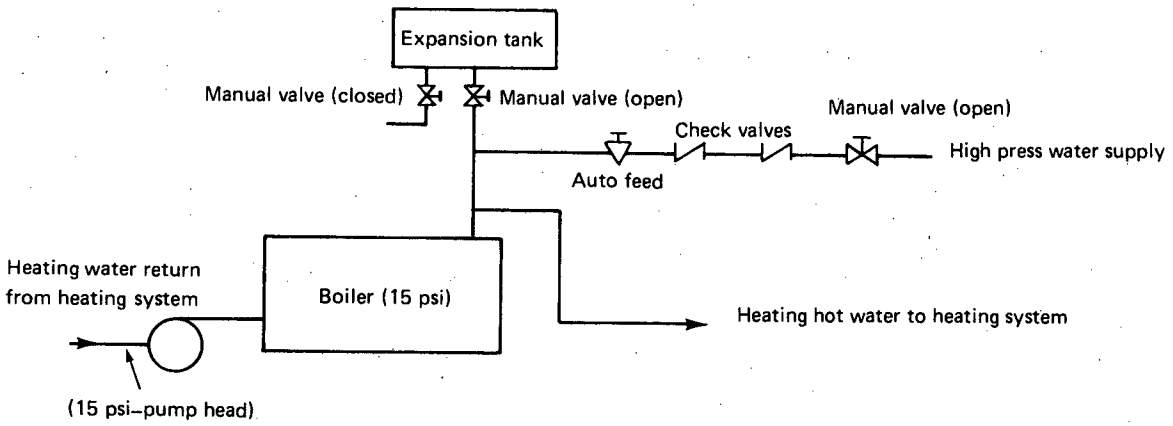

XBL 799-2751

in the boiler approaches a pressure less than 30 psi.

h) If air is entrained in the water, or is present anywhere in the system except in the expansion tank, interruption of flow can result. Interruption of flow disrupts the capability of the system to perform and can cause problems such as freezing coils in ventilating units.

i) All parts of the piping system should be at pressures higher than atmospheric pressure. If any portion of the piping system is below atmospheric pressure, leaks or automatic air vents in that portion admit air into the system.

j) Ideally, pumps should pump out of the boiler or converter; the expansion tank should connect into the system at the boiler or converter outlet; and, the automatic system feed pressure reducing valve should feed into the connection to the expansion tank. The static fill pressure (pressure with pumps stopped) should be sufficient to maintain a positive pressure at the highest point in the system. For example, if the boiler is in a basement and the highest point in the system is 30′ above the boiler, the fill pressure should be a minimum of 30 x 0.433 or 13 pounds per square inch (13 psi). When the pump in this system is started, the pressure in the boiler will not change. The pressure at the pump discharge will increase to the static fill pressure (13 psi), plus the pump head and the entire piping system remains at pressures above the surrounding atmosphere. Thus, leaks will expel water from the system and automatic air vents will expel air when it is present. When this ideal non-leaking system has been purged of air, it will remain so.

k) Many systems have the expansion tank connected into the system at the boiler or converter outlet but have the pumps pumping into the boiler. These systems also probably have the automatic feed pressure reducing valve connected into the piping to the expansion tank. These systems can function adequately provided the boiler and boiler pressure relief valve can accomodate a pressure high enough to insure positive pressures throughout the system when the pumps operate. In this instance, since the expansion tank connection is a point at which the pressure remains constant regardless of pump operations, the pump creates a pressure at its suction which is lower (by the amount of the pump head) than the pressure in the boiler or the setting of the automatic feed valve. Again, assume that we have a boiler rated at 30 psi, with a difference in elevation between the boiler and the highest point in the system of 30′ (13 psi), and that the pump that has a 50′ head (22 psi). If we have the automatic feed valve set at 15 psi (required static fill pressure of 13 psi plus 2 psi safety), the pump suction pressure, when the pump is started, becomes 15 psi minus 22 psi, or -7 psi (7 pounds per square inch below atmospheric pressure). A major part of this system will be at sub-atmospheric pressures when the system is operating. Any leak or automatic air vent anywhere in the negative pressure area can admit air into the piping system.

An alternative to repiping this system to correct the problem would be to increase the pressure in the boiler (expansion tank) and the pressure setting of the automatic feed valve The boiler, however, is rated at 30 psi and cannot be operated at greater than 30 psi. In systems such as this where the boiler pressure cannot be increased to eliminate negative pressures within the system, the only option is to repipe the system to partially or totally correct the problem, or live with the problem that entrained air will create.

l) Another problem that can occur, because of incorrect expansion tank or pump or automatic fill location (and the associated air introduction into the system), is that there may be no point of constant pressure. All air in the system acts as a cushion and, if air is present anywhere in the expansion tank there is no point of constant pressure. Thus, when the pump circulation is stopped (as may be desired in an energy conserving operation), the pressure at the automatic feed may drop causing it to introduce water into the system. When the pump is restarted, the pressure may increase to the point that the relief valve will discharge hot water (wasting energy) and, by the time the relief valve reseats, the pressure in the system may have lowered to the point that more of the system is subjected to sub-atmospheric pressures.

m) Air in the system can usually be heard as a "gurgling" sound. This "gurgling" sound may be intermittent or continuous. It may be almost inaudible or very loud. Loud and continuous gurgling indicates a very severe entrained air problem.

2. Types of piping systems for larger systems.

a) A two pipe reverse return system is inherently self-balancing and requires little effort to balance (insure that each connected device gets its proper percentage of total water flow). This is a system in which the first device to receive water from the supply line is the device at which the return line begins. The further from the boiler, the smaller the supply piping, and the larger the return piping. After the last connected device (return piping at its largest), the return pipe is routed back to the boiler (converter) (at maximum size) with no further connections.

b) A two pipe direct return system is inherently unbalanced and, therefore, requires flow balancing devices such as balancing cocks, circuit setters, etc., and a rather elaborate balancing procedure to insure that each connected device receives correct flow. This system has supply and return lines running parallel to each other with the piping for both supply and return largest in size near the boiler. The last connected device is served by the smallest supply and smallest return connections. Both supply and return piping decrease in size as devices are connected.

3. Water Balance. When rooms heat at different rates in a hot water system that is free of entrained air, the need for a <u>water balance</u> is indicated. This condition is far more likely to occur in a two pipe

Figure 3. TWO PIPE DIRECT RETURN HOT WATER PIPING SYSTEM

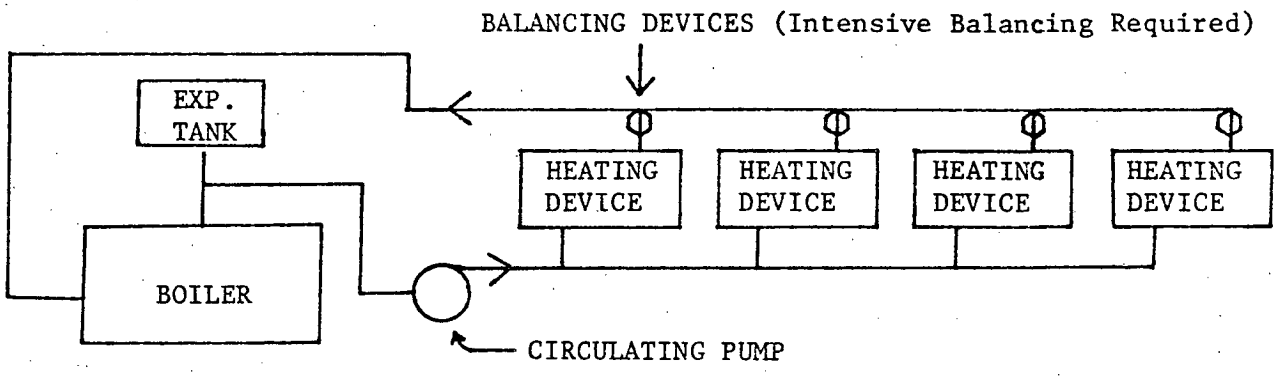

TWO PIPE REVERSE RETURN HOT WATER PIPING SYSTEM

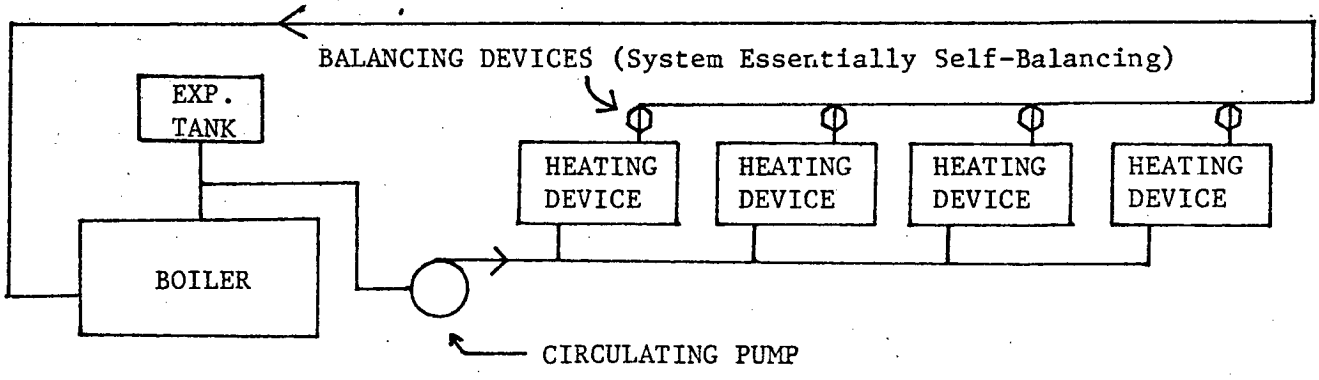

direct return system and balancing is much more difficult on this type of system.

B. Steam Systems.

1. One pipe--obsolete--very few still in existence.

2. Two pipe low pressure, atmospheric return

   a) This system employs a condensate pump vented to the atmosphere

   b) See STEAM TRAPS & CONDENSATE PUMP MAINTENANCE in Section III. Non-functioning steam traps waste large amounts of energy.

3. Two pipe vacuum system

   a) This system operates at less than atmospheric pressure (vacuum) and has a vacuum pump which pumps gases and water.

   b) See VACUUM PUMP MAINTENANCE in Section III.

C. Unit Ventilators--Heating Type, ASHRAE CYCLE II CONTROL (Most commonly used system in American schools).

1. This device performs the functions of heating, filtering of air, ventilating, and cooling with outside air.

2. A very common problem, usually undetected, is the operation of the dampers. Frequently, the outside air damper does not close tightly when the contral cycle requires that it should. When no power (electric control system) or air pressure (pneumatic control system) is supplied to the outside air damper operator, the outside air damper should be held closed by damper operator force. All damper sealing strips must be in place so that the damper, when in its closed position, provides an effective barrier to outside air entering the unit.

3. The control valves used on early hot water units may have flat disc inner construction. This type of valve has very poor control characteristics and causes control cycling (energy waste).

4. See FILTERS, MAINTENANCE in Section III.

Part III:

IS YOUR MAINTENANCE PROGRAM ADEQUATE?

All building envelopes and mechanical systems must be adequately maintained in order to function efficiently.

A. Boilers and furnaces.

1. Keep heat exchange surfaces clean. For a boiler, this means free of soot on the flame side and free of deposits on the water side.

2. Water should be treated as required to prevent corrosion of wetted surfaces throughout the system.

3. Check operation of all required safety devices at least once a year.

B. Burners and Controls.

1. Lubrication as recommended by manufacturer.

2. Check combustion efficiency twice a year, once at the start of the heating season and again in the middle of the season. Adjust burners and draft for maximum efficiency.

C. Filters

1. Cleaned or replaced at intervals required for your building. Filters in unit ventilators are doubly important since a dirty filter not only reduces the capacity of the unit, but may also cause the introduction of additional (unwanted) minimum outside air. The recirculated air portion of a unit ventilator filter typically gets dirty sooner than the outside air portion. The increased resistance of the dirty recirculated air portion causes additional outside air to enter the unit through the minimum open position of the outside air damper.

2. Use good quality, properly fitting filters.

D. Fans.

1. Wheels and scrolls should be kept clean. Adequate filter maintenance will help keep them clean.

2. Bearings to be lubricated per the manufacturer's instructions.

E. Heating and Cooling Coils (Air Cooled Condenser Coils).

1. Finned surface should be clean. Adequate filter maintenance will help keep heating and cooling coils clean.

2. Repair or replace leaking coils.

F. Motors.

1. Lubricate in accordance with manufacturer's requirements.

G. Belts.

1. Replace worn or damaged belts. Belts which are checked, frayed, or show evidence of considerable wear are due for replacement.

2. Tighten as specified by the equipment manufacturer. Belts that are too loose wear out prematurely and reduce the capacity of the driven device. Belts that are too tight may cause bearing failure or, as in the case of a unit ventilator, objectionable noise.

H. Pumps.

1. Follow manufacturer's lubrication instructions.

2. Replace leaking seals.

I. Relief Valves.

1. Check operation periodically during heating season.

2. Repair or replace if leaking or not functioning properly.

J. Steam Traps--check once a year, preferably at the beginning of the heating season.

1. Traps are intended to prevent steam from entering condensate return lines while allowing air and CO_2 to discharge freely into the condensate return lines. A simple performance test can be made by first making sure the steam control valve is open, then, while wearing a pair of heavy canvas gloves, putting one hand on the trap inlet line and the other on the trap discharge condensate line. A big difference in the temperature should be quickly apparent. If no difference is detected, trap malfunction is indicated. Repair or replace as needed.

K. Manual Valves.

1. Operate at least once a year.

2. Check for leaks around valve stems. Tighten stuffing boxes as required.

L. Strainers.

1. Clean once a year.

M. Condensate Pumps (used on steam systems).

1. These pumps perform the functions of venting air and CO_2 to the atmosphere, storing small quantities of condensate (water), and pumping the condensate back into the boiler.

2. If steam is being vented at the condensate pump, steam trap malfunction is indicated (see trap maintenance).

3. Service and lubricate per manufacturer's recommendations.

N. Vacuum Pumps (Used on steam systems)

1. Vacuum pumps are similar in function to condensate pumps except that vacuum pumps pump air and CO_2 as well as water. Operation of pumps should be intermittent and a vacuum (pressure below atmospheric) should be indicated in the vacuum pump receiver.

2. Inability to maintain the system vacuum indicates leaks within the system or that the pump requires overhaul.

3. Service and lubricate per manufacturer's recommendations.

O. Automatic Dampers and Damper Linkages.

1. Lubricate bearings at least once a year (more often in unusual conditions such as in a salt air atmosphere).

2. Check linkage for proper operation each year. Damper blades and all crank arms must be tightly connected to their shafts and adjusted to allow proper operation.

3. All dampers, particularly outside air and exhaust dampers, must be able to close tightly when required to do so by their controllers and held in this closed position with force by the associated damper operator.

4. Sealing strips (where used) must be intact and firmly affixed to the blades or stops. Loose strips should be re-glued.

P. Automatic Valves--Annual.

1. Check for leaks at stuffing boxes. If leaking, tighten stuffing box or replace packing.

2. Check for tight closure. If valve leaks, repair or replace.

3. Check for free and smooth control operation. Sticking or jerky action indicates corrosion on stems or a too-tight stuffing box. Adjust or replace as appropriate.

4. If the valve is pneumatic, listen for air leaks. If leaking, replace operator or diaphragm.

Q. Automatic Damper Operators--Annual

1. Check for smooth damper operation. If sticky or jerky, the problem is likely in the damper. See automatic damper maintenance.

2. If the operator is pneumatic, listen for air leaks. If leakage is apparent, replace diaphragm.

3. Lubricate as directed by manufacturer.

4. If the attached damper is either an outdoor air or exhaust damper, it is usually "normally closed". This means that, with no power applied to an electric damper operator or no air pressure supplied to a pneumatic damper operator, the damper is to close. Insure that it is held tightly closed in this "normal" position with damper operator force.

R. Control Air Compressors.

1. Change oil per manufacturer's direction.

2. Blow down the air storage tank per manufacturer's direction. (Open drain valve at bottom of air storage tank until all water has been remoed therefrom.)

3. Blow down air and oil filters bi-weekly.

4. If compressor has a refrigerated aftercooler, check its operation. Check automatic drain trap (if so equipped) once a week. Repair any malfunction.

S. Time Clocks.

1. Reset after any power failure.

2 Reset as time basis changes, (i.e., standard to daylight savings).

3. Check for proper time once a week.

T. Expansion Tanks.

1. In a properly installed system, this device requires little attention. Check monthly to insure that it has sufficient air to accommodate the water expansion without undue change in system pressure. See also discussion in IS YOUR BASIC HEATING SYSTEM FUNCTIONAL? section.

2. Some expansion tanks are pre-charged with higher than atmospheric air pressure. Some have diaphragms. Most, however, are not pre-charged and usually have gauge glasses to indicate the water level. With the system hot (maximum pressure in the system) the sight glass should indicate that the tank is no more than two-thirds full of water. To recharge a non-precharged tank requires filling the tank with air by draining the water. To do this, close the valve between the tank and the main piping system. Open the drain valve and drain all the water from the tank. Caution should be exercised because this water can be

very hot. Normally, a pail is used to catch the water, closing the valve while the pail is emptied. When the tank is empty, close the drain valve and open the valve in the piping between the tank and the system. The tank will fill with water to the system's normal operating level.

U. Unit Ventilators.

1. A unit ventilator, as the name implies, is a unitized heating and ventilating system. It contains a fan, fan motor, heating and/or cooling coil, filter, outside air damper, return air damper, and control devices all within one housing. Each component must be serviced as outlined herein and kept in good, efficient working order.

V. Piping System.

1. Most systems are essentially closed. There should be no need to introduce significant amounts of makeup water. If your system uses significant quantities of makeup water, leaks or inoperative steam traps are indicated. In leaking steam systems, which have properly operating steam traps, the condensate return piping is usually the source of the problem. Leaks must be found and repaired.

Part IV:

ENERGY CONSERVATION OPPORTUNITIES USUALLY HAVING GOOD PAYBACK POTENTIAL
(depending on energy costs at your location)

(This list does not include every conceivable cost effective ECO and is intended as a guide only.)

A. Reduce Outside Air (Reduce Minimum Outside Air)

1. Except for air conditioned schools with economizer controls which are operating on the cooling mode, ventilation air should be provided only during those hours of full occupancy of the school or a particular area of the school.

2. The minimum ventilation rate should not be in excess of that required by the state or local ventilation code. Normally these codes require 5 cfm outside air per occupant. Research indicates that this is a conservative requirement and efforts are being made to justify the changing of basic code requirements to lower levels than 5 cfm.

3. In a unit-ventilator equipped classroom, precise control of actual minimum air quantity is extremely difficult. Actual minimum outside air is a function of damper position, relative pressure between inside and outside, wind direction and velocity, and cleanliness of filters. Usually a "just cracked open" minimum outside air damper position will provide adequate ventilation.

4. In extremely cold climates, a low minimum ventilation rate combined with high classroom occupancy may cause water condensation or ice to form on classroom windows and window frames. Correcting the cause of this condensation (low inside surface temperature) by covering windows with plastic sheets, installing storm windows, etc., should be the first consideration. Corrective actions of this sort will also conserve energy and cost justification should be on the basis of both measures (reducing outside air and improving the "U" value of the original window area) being considered together as one retrofit.

5. Exhaust fans, or gravity exhaust vents, should be allowed to operate only when actually needed. General toilet exhaust fans should function only during the full occupancy portion of the school day. Special purpose exhaust operation should be limited to actual need. The capacity of all exhaust fans should be reduced to the lowest possible code requirement. Air expelled from a building will be replaced by outside air entering the building by some route.

6. All outside air and exhaust dampers must be able to close tightly. (See DAMPERS AND DAMPER OPERATIONS, MAINTENANCE, section I.) All such units not having dampers should be provided with tight closing dampers.

B. Night Setback (reducing unoccupied temperatures of heating systems).

1. Stop the ventilation system (air supply fans and exhaust fans) for all times except hours of expected full building (or zone) occupancy. Where ventilation functions are performed by systems which also supply the heating functions (such as unit ventilators), the ventilation function should be discontinued during unoccupied periods. The fans may be required to provide the unoccupied heating function.

2. Night (unoccupied cycle) temperatures within the structure should be allowed to fall to approximately 55°F (or lower). All primary apparatus such as boilers (furnaces) should be shut down during the night (unoccupied) cycle until the temperature in the coldest room in the building falls to approximately 50°F. When the building's interior temperature (cold room) falls below 50°F, the primary apparatus (boilers and circulating pumps or furnaces) should be restarted. As a precaution against freezing of system components, the circulating pumps in a hot water heating system should operate whenever the true outside air temperature is below 32°F even though boiler operation may not be required. When night cycling (intermittent operation of combination heating and ventilation devices, such as unit ventilators, on a heating only mode) is employed, care must be exercised to insure that the fans within these heating devices are not permitted to operate when no heat is available (hot water circulating pumps shut down or no usable heat in the boiler). On larger fan systems check belt drives to insure adequate capacity and adjustment for cycling mode.

3. When partial building use is a frequent need, and heating and ventilation of the areas used is important, the night setback system should be zoned to permit the heating and ventilation of the night use part of the building while leaving the balance of the building on the night (unoccupied) mode.

4. The system should be operated on the night mode (unoccupied cycle) for the complete duration of school holidays and vacation periods. Since some type of program time switch is ordinarily used to switch from day to night modes for a normal school week, it is adviseable to provide a manual switch to facilitate overriding the automatic switch for vacation and holiday periods.

5. The time period for morning warmup system operation should be kept as short as possible to provide a minimum level of comfort at the start of the school day. Ideally the introduction of outside air and exhaust fan operation should be prohibited until the start of the actual school day.

6. Switching to the "night" cycle should occur at the end of the actual full occupancy school day. Continuing to maintain daytime temperatures (even with the ventilation system inoperative) in the entire school building after the end of the normal school day for the comfort of only a few occupants is not normally justifiable. (See exception in "Boiler Operation Optimization Panel" in Part VI of Supplement A.)

C. Improve Boiler (Furnace) Efficiency

1. Major fuel-to-heat conversion devices (boiler/burners, furnace/burners) properly designed, installed an maintained should be capable of combustion efficiencies of 80% or higher. If your equipment is properly maintained and adjusted and is incapable of operation at efficiencies near this level, expert advice is needed. Cost-effective solutions may be one or more of the following:

   a) Modify flue and/or draft control.

   b) Modify combustion chamber.

   c) Modify or replace burners and controls.

   d) Replace boilers and burners.

2. Overall operating efficiency is a function of full fire combustion efficiency but is also dependent upon other factors. Overall efficiency can also be improved by:

   a) Modulating control of firing rate with control of air/fuel ratio over the entire operating range.

   b) Reducing the operating temperature of the water (air), leaving the boiler (furnace) when possible. Maximum heating medium temperature is required only at minimum outdoor air temperatures. Outdoor reset controls are normally employed to reset heating medium temperature. Resetting boiler operating temperature downward as the outside air temperature increases is advisable even on systems employing mixing valves for heating hot water reset. Boilers should never be operated at higher than required temperatures. Caution: boilers may be damaged by firing at too low a water temperature. Consult the manufacturer for minimum acceptable operating temperature (normally 130 to 140°F).

   c) Stop boilers (and pumps) when their operation is not required. Usually heat output from boilers (furnaces) will not be required for classrooms at outdoor air temperatures above 45 ° F on the day (occupied) cycle after morning warmup has been accomplished. Using a boiler only when actually required and utilizing all usable heat produced during those periods of operation will save major amounts of energy.

   d) Where multiple boilers are installed, operate the minimum number of units required to meet the heating load. Standby boilers should be shut off and valved off.

D. Lower Room Thermostat Settings (Heating systems only).

1. Degree of comfort cannot be equated only to space dry bulb temperature (temperature indicated on a thermometer). Space relative humidity affects comfort. Air movement (drafts) and mean radiant temperature have a profound affect on occupant comfort. The natinal emergency

guideline of 65 °F can be extremely uncomfortable in a drafty classroom or, during cold weather, in a classroom which has a large percentage of glass in its non sun exposed exterior wall. A 65°F room temperature may be quite comfortable on any sunny day in a room with no drafts and with sun exposed windows.

2. Adherence to the emergency 65°F guideline may create an amount of discomfort in some classrooms. However, some discomfort and occupant conditioning to this discomfort is necessary in order to use our limited energy prudently. Classroom temperatures in the mid to upper 70's (degrees F), when the system is on a heating cycle, are unreasonably wasteful.

E. Shut Off Domestic Hot Water Heating During Unoccupied Periods (Hot Water To Washrooms).

1. Operation of the domestic water heater can be tied into the night setback system. The heater and recirculation pumps should stop during unoccupied periods.

2. A manually set bypass timer can be provided to bypass the shutdown feature to provide hot water for a limited time during unoccupied hours.

F. Reduce Temperature of Domestic Hot Water.

1. Water temperature should be no higher than 110-120° F during occupied periods. For many schools, with only handwashing facilities, the temperature can be even lower.

2. Do not use heating boiler to heat domestic hot water. Provide a separate domestic hot water heater.

G. Replace Incandescent Lighting.

1. New energy-conserving fluorescent or high pressure sodium lamps give much more light for a given amount of power input than incandescent lamps. It has been claimed that energy saving fluorescent lamps may not be more efficient than standard fluorescent lamps in two lamp luminaires. (Check with your illumination consultant.)

2. Users report very satisfactory experience with high pressure sodium lighting (HPS) in schools. Not only does HPS lighting save energy, but, it also reduces maintenance costs substantially. When using HPS lighting it may be advisable to use it throughout the facility to minimize the "color" problem. Earthtone colors are reported to work best with HPS lighting. Colors should be selected under HPS lighting.

3. Consider lowering the height of any new fixtures. This will give more visibility at desk level with less power input.

4. Remove unneeded fixtures or lamps.

H. Partially Delamp Existing Fluorescent Light Fixtures and Install New Polarizing Lenses in Fixtures.

1. This decision should be made with the advice of an illumination consultant.

2. Polarized lenses may be able to provide adequate visibility in a partially delamped lighting system.

3. Delamping saves energy

I. Turn Off Lighting When Daylight Provides Adequate Illumination.

J. Reduce or Eliminate Evening Cleaning of Building.

1. Schedule cleaning activities to daylight hours or when lights are on for other reasons.

K. Install Water Flow Restrictors and/or Water Conserving Shower Heads.

1. Flow restrictors on hot water supplies to faucets and shower heads help eliminate waste. Water-conserving shower heads also reduce hot water requirements.

L. Keep Classroom Doors and Windows Closed During Occupancy.

1. Open doors can cause room thermostats to sense a temperature that is not representative of the space.

2. Open doors and windows can upset an automatic heating and ventilation system. When no automatically controlled ventilation system exists, windows can be opened for desired ventilation when the heating system has been turned off.

Part V:

ENERGY CONSERVATION OPPORTUNITIES WHICH MAY PROVIDE ADEQUATE PAYBACK POTENTIAL.

(List not intended to be all inclusive.)

A. Replace standard fluorescent lighting fixtures and ballasts with energy conserving high pressure sodium or fluorescent lighting fixtures and ballasts.

   1. See cautions in Section IV, G, 2.

   2. Replacement of fixtures can be combined with lowering the light fixtures to obtain more visibility at desk level with less power input.

   3. "Energy Saving" fluorescent lighting may not be more efficient than standard fluorescent lighting in two lamp luminaries.

   4. Consultation with an illumination specialist is advised.

B. Install Light Switching to Facilitate Shutting Off Unneeded Lights.

   1. In many classrooms, the exterior bank of lighting is unneeded much of the time.

   2. If switching is to produce any energy savings, someone must use the switch.

C. Use of Security Lighting.

   1. Contrary to normal beliefs, at least one school district has found that vandalism decreases when schools are left totally dark.*

D. Add Insulation to Roof.

   1. If roof is due for replacement, and has a low "R" value, adding sufficient insulation to accomplish approximately R=20 may be cost effective.

   2. Placement of insulation is an important consideration. Increasing the R value by using insulation on the roof deck under the roofing usually presents no problem. When the structure has a suspended ceiling, adding insulation immediately above this suspended ceiling can cause condensation problems on the underside of the roof deck.

---

* San Antonio Independent School District. News story on page 52, June 7, 1978, San Francisco Examiner.

3. It should be remembered that even during fairly cold weather most classrooms will have more heat supplied to them by lights and occupants than is lost through the structure and through minimum ventilation air. This fact, as well as the consideration that unoccupied temperatures should be approximately 55°F, and that insulation and its installation are expensive, requires careful study to determine the cost-effectiveness of this ECO.

E. Reduce Window Area of Classrooms or Double Glaze Windows, etc.

1. Refer to D. 3. above.

2. Other considerations such as vandalism, loss of daylight, and elimination of condensation can affect the decision on this ECO.

F. Insulate Steam, Hot Water, or Condensate Pipes or Ducts.

1. Most pipes, except possibly condensate pipes, will probably already be insulated. Access to the uninsulated pipe is a big factor in determining the cost, and, thus cost effectiveness, of this ECO.

G. Deactivate Auxiliary Heating Devices When Not Needed.

1. One system commonly used in conjunction with unit ventilators is an under window, "draft killing", limited capacity fin-tube radiation section. Many of these systems continue to add heat to the room even when it is not required to maintain the general ambient temperature. As a conservation measure, when the under window radiation has independent control valves, these valves can be arranged to close completely during the occupied cycle, whenever the outdoor temperature is above 35°F.

H. Reduce Infiltration.

1. Integrity of the building envelope is an obvious need. Restoring or maintaining this integrity may involve:

a) Weather stripping windows and any exterior classroom doors.

b) Replacing windows with better sealing units.

c) Installing vestibules at main entrances.

Part VI:

RETROFITTING A "TYPICAL" SCHOOL

The decision on how to retrofit must be based upon the cost of the retrofit and its energy saving potential. Determining the cost of retrofits presents no major problem. Once a decision has been made to investigate a particular retrofit, cost estimates can be obtained from contractors or material suppliers. The real problems are in the estimating of amounts of energy that can be saved by proper implementation of the retrofit involved and in getting cost effective retrofits properly implemented. Of all possible retrofits, those dealing with reducing the amount of heating fuel used are probably the most difficult to analyze. This section of this supplement offers guidance for energy conservation retrofit decision making by providing a method of estimating "ball park" heating fuel saving percentages that can be achieved by implementing some common retrofits to a "typical" elementary school's mechanical system, applying these percentages to similar schools and determining the cost effectiveness of some retrofits. One scheme for possible optimization of boiler operation will also be presented as a very energy efficient and cost effective retrofit for our typical school and for schools with similar heating and ventilation systems.

A. Description of the "Typical" School.

The "typical" school is a single story 20 classroom elementary school with library, multi-purpose room, teachers lounge, office area and washroom areas. It is 40,000 square feet in size, has a roof U value of 0.15 (R = 6.67), an outside wall U value of 0.34 (R = 2.94), has 220 $ft.^2$ of window area per classroom and operates 178 days out of a 278 day calendar period beginning immediately after Labor Day. The building has infrequent "after hours" use and such use is confined to the multi-purpose room.

This "typical" school is heated and ventilated only (no air conditioning) and employs a single hot water boiler with operating temperature automatically adjusted from outside temperature from 210°F hot water temperature at minimum outside temperature to 130 °F boiler water temperature at 60 °F outside air temperature. The boiler is operated from late September until early May. Boiler combustion efficiency is 80%. Each classroom, and the library, has a unit ventilator operating on an ASHRAE Cycle II control cycle for occupied periods and cycles intermittently, without outside air, to maintain the unoccupied space condition. The multi-purpose room is served by a heating and ventilating unit controlled in the same manner as the unit ventilator. All other spaces are heated by convectors or convertors with fans (forced flow convectors). The washrooms have powered exhaust fans which operate whenever the unit ventilators are on their "occupied" cycle of operation. Domestic hot water (water for washrooms, etc.) is heated by a separate water heater.

The building is in good repair and the mechanical system is adequately maintained and adjusted and is operating efficiently.

B. Heating Fuel Use Factors

To provide a method to "ball park" the energy saving potential of various retrofits "heating fuel use factors" (HFUF) have been developed as a basis of comparison. Table S-1 lists 11 operating conditions for the system installed in our "typical" school. For each of these 11 operating conditions, two heating fuel use factors are given. One factor is provided for a "fairly mild" climate having a +5 ^{o} F design temperature and 5300 degree days during a "normal" school heating season. A second "severe" climate (-11° F design temperature and 7600 degree days in a normal season) heating fuel use factor is also given for each of the 11 system operating conditins. The accuracy of these factors when used to predict potential fuel saving for other schools is greatly dependent upon how they are applied. These factors assume good efficient operation of systems before and after retrofit and also assume that any and all retrofits will be <u>effectively implemented</u>.

To use these factors, first pick the climate that most nearly approximates that of your area. Next pick the condition that describes how your system is presently operated. Select the fuel use factor that applies. This is your base. To figure an approximate percentage of fuel to be saved by retrofitting to accomplish other operating conditions, select the fuel use factor for any operating condition listed in Table S-1 which has a higher condition number than that of your existing system operation. Use factors from the climate column which is most similar to your climate. The approximate percentage of fuel saved by retrofitting is HFUF of existing system minus HFUF of retrofitted system divided by HFUF of existing system. For example, if your present system is a condition 3 system and you want to know approximately how much you can save by retrofiting to a condition 8 system, select the HFUF's for conditions 3 and 8 from the columns for climates closest to yours. (If you live in a 7000 degree day climate with -10° F design temperature, you would use the values from the 7600 DD columns.) The approximate percentage saved will be

$$\frac{395 - 343}{395} = .132 \text{ or } 13.2$$

This percentage is applied to your historical energy consumption at your school, normalized on a degree day basis.

Establishing the historical heating fuel use for your school building can be done with the three most recent years of actual heating fuel <u>usage</u> (not necessarily the same as fuel purchased) records. Next you need the heating degree days of a "normal" year and for the three recent years for which you have actual heating fuel <u>use</u> data. Degree day information for your location is available from your local utility company or weather bureau. Make sure the same calendar time period is used for both fuel use and for degree days. "Normalize" each of the three years fuel use by multiplying the actual fuel use times the normal degree days for that time period and divide by the actual degree days for the same time period of fuel use data. This gives a "normalized" fuel useage. After performing this calculation for all three years, add the three normalized fuel usage figures and divide by three. This gives a historical normalized fuel use figure. It is to this figure that the approximate percentage savings is applied.

TABLE S-1

	HEATING FUEL USE FACTORS	
	+5° design 5300 deg. days	-11°F design 7600 deg. days
Condition 1 - No unoccupied cycle temperature setback - high ventilation rate - long occupied cycle a) Unit vents and ventilation units operate on a 33 1/3 % minimum outside air occupied cycle. b) Unit vents and ventilating units operate without outside air on the unoccupied cycle c) Room temperatures maintained at 70°F at all times. d) Occupied cycle of 11 hours per school day. e) Exhaust fans operate on occupied cycle only.	376	457
Condition 2 - Same as condition 1 except that the occupied cycle is reduced to 7 hours per school day.	360	436
Condition 3 - Same as condition 1 except that unoccupied cycle room temperatures are set back to 60°F.	320	395
Condition 4 - Same as condition 3 except that the occupied cycle is reduced to 7 hours per school day	301	370
Condition 5 - Same as condition 1 except that the occupied ventilation rate is reduced to 5 cfm outside air per room occupant and exhaust systems are re-balanced to minimum code requirements.	338	406
Condition 6 - Same as condition 5 except that the occupied cycle is reduced to 7 hours per school day	335	403
Condition 7 - Same as condition 5 except that the unoccupied room temperatures are lowered to 60°F	287	351
Condition 8 - Same as condition 6 except that the unoccupied room temperatures are lowered to 60°F.	280	343

Condition 9 - Same as condition 8 except that roof insulation has been added to increase R from 6.67 to 20. (reduce U from 0.15 to 0.05)	213	309
Condition 10 - Condition 8 with the addition of a "boiler optimization panel" to allow boiler to operate only when its output is required by the building, to utilize more of the heat generated by the boiler, to permit ventilation to occur only during full occupancy of building or zone, etc.	182	255
Condition 11 - Condition 10 with the roof insulation of Condition 9 added	161	255

All of the above factors assume that the full fire combusion efficiency of the boiler is 80% before and after system changes (retrofits) are made and that any and all system retrofits will be properly installed, adjusted and/or calibrated.

For purposes of illustration, assume your normal 7000 degree day climate had July to June degree day figures of 6300 for 1978-79, 7600 for 1977-78 and 6900 for 1976-77 heating seasons. Your actual fuel use (July to June), was 33,000, 36,000, and 34000 therms for the same years. Normalized fuel consumption would be

$$33{,}000 \times \frac{7000}{6300} \quad \text{or} \quad 36{,}667 \quad 1978\text{-}79$$

$$36{,}000 \times \frac{7000}{7600} \quad \text{or} \quad 33{,}158 \quad 1977\text{-}78$$

$$34{,}000 \times \frac{7000}{6900} \quad \text{or} \quad 34{,}493 \quad 1976\text{-}77$$

The normalized historical energy use for your school is $\frac{36{,}667 + 33{,}158 + 34{,}493}{3}$ or 34,773 therms. (When three year data is unavailable a one year normalized existing energy consumption will need to be used. Obviously this will tend to a less accurate prediction than a historical figure based on three years.) Your retrofit from a condition 3 system to a condition 8 system will save approximately 13.2% of the historical normalized energy consumption or 4590 therms during a "normal" year.

C. Why boiler optimization?

Before explaining the advantages and features of "Boiler Optimization" it is well to point out that there are wide differences of opinion on how boilers should be operated. One school of thought is that boilers should be fixed at the system maximum design temperature whenever heat is needed. In this instance, any lowering of the temperature of water supplied to the heating system should be accomplished by blending the hot boiler water with water returned from the system. Another school of thought frowns on this method of operation because of possible "thermal shock" to the boiler when water is returned at a temperature too much lower than the temperature being maintained in the boiler.

Still another school of thought advocates resetting the temperature maintained by the boiler to more nearly match load requirements but to a temperature no lower than 160°F (others recommend 140°F and 130°F as minimums). The reason for limiting the minimum operating temperature is that when a dewpoint temperature occurs on any exposed boiler surface, acids can form which attack that surface. It is interesting to note that the ASHRAE 1975 Equipment Handbook* recommends firing an idle boiler to maintain the boiler water at about 100°F to keep the boiler warm (and the boiler room dry) stating that the fuel consumed by so doing is a small cost to pay for protection from boiler deterioration.

Still another school of thought cautions against operating boilers equipped with modulating burners at reduced temperatures but see less danger in doing so when boilers are equipped with on-off control burners.

---

*Chapter 24, page 24-8, "Care of Idle Boilers."

Many well maintained, steel, fire tube boilers have been operated in a manner approximating that accomplished by the following description for many years without adverse effects. In the continuing interest in energy conservation methods the Energy Efficient Buildings Program at Lawrence Berkeley Laboratory wil be interested in receiving information regarding any problems that may be encountered when using "Boiler Optimization."

The heating system for any building is sized for the maximum heating load. Most of the time the actual load is only a fraction of maximum and much of the time the actual net load is zero. For example, an area with a design temperature of -11° F (design temperature is the basis for sizing a heating system) may have an average heating season temperature in excess of 37° F. Boilers, even in severe climates, need to operate at full capacity only a small part of a heating season.

Classrooms in schools receive heat from the classroom lighting and motorized equipment and from the room occupants. When ventilated at normal minimum code requirements (5 cfm outside air per occupant) classrooms frequently do not need heat, after warmup, at outside air temperatures above approximately 35 to 40 ^{o} F, and almost none need heat above 45° F after any required initial warmup is complete. When heating systems are reset to lower unoccupied cycle temperatures there is a substantial period of time when no heat is required. This time period can be the entire unoccupied period for most of the school year. When a boiler is allowed to maintain hot water during those times when there is no demand for hot water, energy is wasted. When a boiler operates at partial load (periodic firing) its overall efficiency drops. Oversized boilers are less efficient than those properly sized. Systems which employ a single boiler must have that boiler sized for 100% of the maximum load and consequently it must be operated in an oversized condition at most times. Energy conservation measures which reduce the load on the boiler have the effect of making it even more oversized and thus reduce its overall operating efficiency even further unless its operation is optimized.

Boiler operation optimization means allowing the boiler to operate only when its heat output is needed or expected to be needed in a reasonably short period of time. Figure S-1 illustrates a boiler operation optimization panel for the heating system in our "typical" school. The panel has been designed for a single boiler heating system having an unoccupied period setback control system employing the unit ventilators as unit heaters (no outside air) during the unoccupied period. The features of this panel are:

1. A single 7 day program time clock establishes a program for the normal week (a 7 day cycle). It is to be set to provide minimum warmup periods and to set the system to the unoccupied mode at the end of the full occupancy part of the school day. This is the only device which requires resetting after power failure or when time base changes.

2. A single "holiday" override switch keeps the entire system on the unoccupied cycle for the duration of a holiday period.

3. An adjustable "cycle repeating" timer is to be adjusted to provide boiler operation for a minimum preset "warmup" time period when outside air temperatures are above a preset temperature (approximately

FIGURE S-1

BOILER OPERATION OPTIMIZATION PANEL FOR
"TYPICAL" SCHOOL WITH PNEUMATIC DAY - NIGHT CONTROLS
(Two temperature thermostats — intermittent "night" cycling)

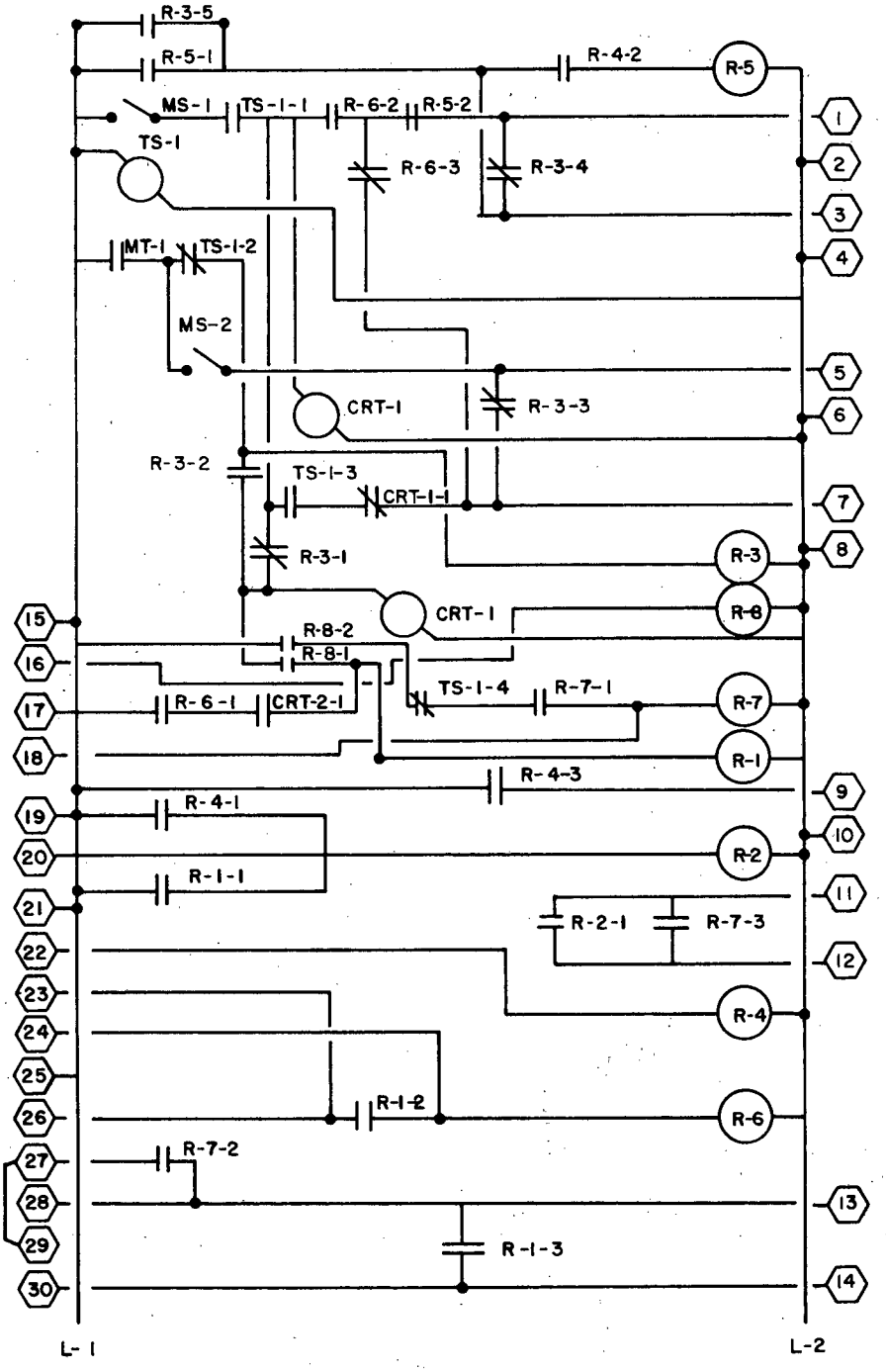

LEGEND AND EXPLANATION FOR BOILER OPTIMIZATION PANEL (FIGURE S-1)

1. TS-1 is a 7-day program time switch with 2 normally open (close for occupied cycle) contacts and 2 normally closed contacts. Set to close normally open contacts approximately 1 1/2 hours before classes start and open the normally open contacts, when the class day is over. This is the only device that needs resetting after a power failure or when the time base changes.

2. CRT-1 is a cycle repeating timer. Set to open its contact (CRT-1-1) for approximately 1 1/2 hours after power is applied to CRT-1. (This time period should be adjusted to suit the warmup period of TS-1).

3. CRT-2 is a cycle repeating timer. Set to close its contact (CRT-2-1) for approximately 1 1/2 hours after power is applied to CRT-2. This time period can be shortened for better insulated buildings than our typical school or for schools which have less classroom window area.

4. MT-1 is an interval timer. It will close its contact (MT-1) for the amount of time set on its dial -- then open. Its purpose is to provide a timed period for "after hours" use of the multi-purpose room.

5. MS-1 is a manual "holiday override" switch. Closing this switch allows TS-1 to control the occupied-unoccupied switching of the system. Opening MS-1 keeps the system on the unoccupied cycle for holidays and vacation periods.

6. MS-2 is a manual switch. Closing MS-2 allows the multi-purpose room heating and ventilating unit to ventilate during "after hours" use. This switch would normally be closed only when large crowds are present or in warm weather.

7. Terminals 1 through 10 interconnect this panel to the pneumatic control system for the building. Terminals 1, 2, 7 and 8 provide signals for the classrooms and 3, 4, 5 and 6 provide operating signals for the multi-purpose room. Terminals 9 and 10 are common to both systems.

8. Terminals 11 and 12 - provide a closed contact for heating hot circulating pump operation. Relay R-2 can be procured with additional contacts for additional circulating pumps. The relay contacts may be able to be ordered to handle the full current of the circulating pump motors or, in the case of larger pump motors, can be used to pull in magnetic motor starters.

9. Terminals 13 and 14 are wired in series with the boiler operating controls. Relay R-1 can be provided with additional contacts to accommodate a second boiler but additional devices must be provided so that any stand-by boiler fulfills only a standby function. The stand by boiler is not to be allowed to operate when its capacity is not required by the system. When a boiler is in the "stand by" condition it should be valved off (preferably automatically) so that no water circulates through it.

10. Terminals 15 and 16 - are connected to a thermostat sensing true outside temperature. It should be set to close its contact at about 44°F (open at 46°F). In buildings with better insulation or less window area than our typical school, these settings should be lowered until discomfort occurs on those days with outside air temperatures slightly above the thermostat setting.

11. Terminals 17 and 18 are connected to a thermostat located in the "coldest" room (classroom or multi-purpose room). This thermostat will close its contact below 50°F and open its contact above 52°F.

12. Terminals 19 and 20 are connected to a thermostat sensing true outside air temperature. This thermostat is adjusted to close its contact below 32°F and open at 33°F.

13. Terminals 21 and 22 are connected to a thermostat sensing the water temperature at the outlet of the boiler. It is adjusted to close its contacts at 105°F (open at 100°F).

14. Terminals 23 and 24 are connected to a thermostat in the coldest room (classroom or multi-purpose room). It is adjusted to close its contact at 67°F (open at 68°F).

15. Terminals 25 and 26 are connected to a thermostat sensing true outside air temperature. This thermostat is adjusted to close its contact at 59°F (open at 61°F).

16. Terminals 27 and 28 may be connected to a thermostat sensing boiler room temperature. This thermostat would close its contact at 45°F (open at 60°F). (This feature is used only in very severe climates where the combustion air intakes to the boiler room are not equipped with automatic dampers. Its purpose is to prevent the possible freezing of exposed domestic water lines, etc., during periods of boiler shutdown in severely cold weather. In milder climates, or when boiler room combustion air intakes have automatic dampers, these terminals are not used.)

17. Terminals 29 and 30 are connected to a thermostat sensing boiler water temperature (this can be the existing "operating aquastat" on most boilers if it is totally disconnected from its existing wiring and connected to terminals 29 and 30. The wires originally connected to the operating aquastat should be spliced together leaving the outside reset control and the high limit aquastat in control of the burner). The temperature setting for the thermostat attached to 29 and 30 should be close contact at 140°F (open at 150°F).

18. Relays. R-1 has 3, or more, normally open contacts. R-2 has 1, or more, normally open contact. R-3 has 2 normally open, 3 normally closed contacts. R-4 has 3 normally open contacts, R-5 has 1 normally open, 1 normally closed contact. R-6 has 2 normally open, 1 normally closed contact. R-7 has 3 normally open contacts, R-8 has 2 normally open contacts.

20. General - This depiction of a "Boiler Operation Optimization Control Panel" and that of the "probable" pneumatic control system are diagrammatic and are presented to explain a concept. There are many schools with systems that have control systems essentially identical to our "probable" system which can use our "optimization" panel with little or no tailoring.

The boiler panel has been shown as totally line voltage (115 Volt) to illustrate function. Except for relay contacts for boiler and pumps, it can also be totally low voltage (24v) provided panel and field devices are properly ordered for that service. Combinations of the two (line voltage - low voltage) are possible with the use of transformers and transformer relays. Again care must be exercised to insure that panel and field devices are compatible.

It is possible that the offices within a school may be uncomfortably cool when boiler optimization is accomplished. Reducing the heat loss from these spaces by adding storm windows, etc., may eliminate the problem. When additional heat is required, small electric resistance heating units (1000 to 1500 watts) can be used to provide comfort during occupied hours. Portable units can be used unless prohibited by local fire codes. In any event these units, portable or permanent, should be disabled when the room lights are off.

45° F) but below approximately 60° F or when a key "cold" room is below 67° F.

4. An adjustable "cycle repeating timer" is to be adjusted to insure that ventilation is permitted only during actual occupied hours.

5. Provision for boiler shutdown after a warmup cycle has been accomplished on the occupied cycle when outside air temperature is above approximately 45° F. The heating hot water circulating pumps continue operation until the boiler water temperature is reduced to 100° F.

6. Provision for boiler shutdown any time the system is indexed from occupied temperatures to unoccupied temperatures until the temperature of the "coldest" room in the building drops to 50° F, at which time the boiler is restarted and operates to maintain an unoccupied cycle boiler water temperatture of approximately 140°F.

7. If the water in the boiler is hot at the time the system is indexed to unoccupied mode, the thermostats in the spaces remain at occupied temperature, ventilation is discontinued and the hot water circulating pumps continue to operate until the heat in the boiler is utilized (boiler water temperature drops to 100° F), at which time the space thermostats are reset to their unoccupied temperature of 60° F. This provides a minimal cost comfort period extension in cold weather.

8. The fan motors of the unit ventilators and ventilating units are not permitted to operate on the unoccupied cycle when there is no usable heat available (boiler water temperature below 100° F).

9. Hot water circulating pumps operate whenever there is usable heat in the boiler and anytime the outside air temperature is below 32° F as a precaution against freezing of coils. (Note that all other freeze protection safeguards such as tight closing dampers and air free heating hot water must always be employed.)

10. A single internal timer presets an "after hours" use time for the multi-purpose room. This permits heating the multi-purpose room during unoccupied periods. When the outside air temperature is below about 45° F, the boiler is operated for a time period equal to that of morning warmup.

11. A manual "ventilation" switch for the multi-purpose room enables or disables the ventilation cycle of the multi-purpose room unit during the "after hours" use of that area as preset on the internal timer of item 10 above.

Figure S-2 illustrates how this panel ties in to a standard pneumatic control system. It also includes the modificatins which must be made to that system. Adaptations and modifications are necessary for applications to different types of systems. These figures are supplied to illustrate a concept. Systems with standby boilers, etc., will need to add standby provisions. The

FIGURE S-2

PROBABLE EXISTING CONTROL SYSTEM-- WITH BOILER OPTIMIZATION PANEL OPTION MODIFICATION ADDED

TYPICAL FOR EACH UNIT VENTILATOR-- HEATING AND VENTILATING

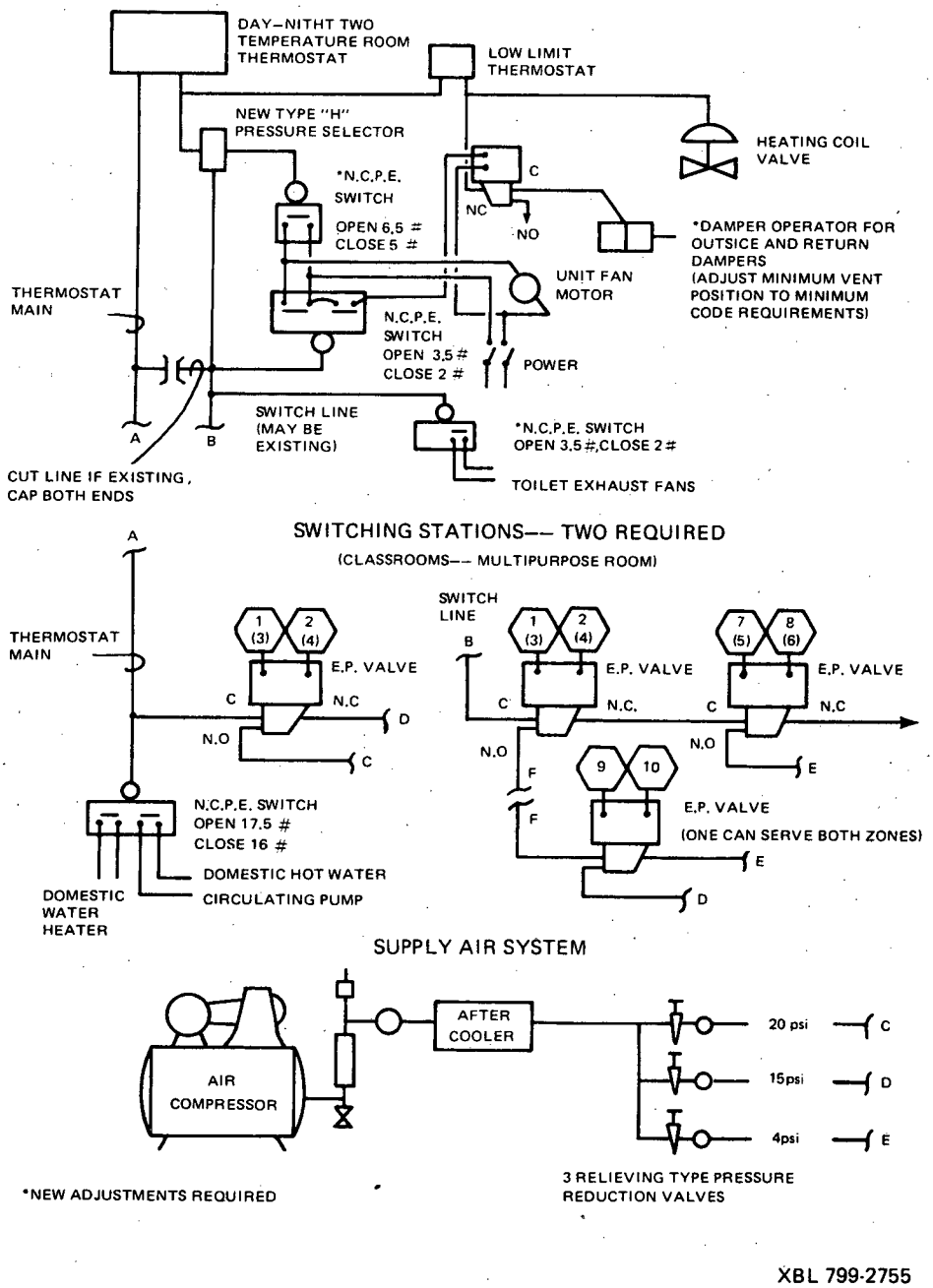

XBL 799-2755

standby boiler should be locked out of the operational cycle and isolated from a water circulation standpoint except when the need for standby operation exists. The standby provision should accommodate switching the lead boiler.

D. How Do I Determine If a Retrofit Is Cost-Effective?

First we must define cost effective. This program initially defined "cost effective" as recovering the investment, with interest adjustment, within 12 years, assuming that energy costs escalate at a rate of 10%/year. Energy costs have certainly been increasing at least that amount. No one is certain what the future will bring, but perhaps the original definition of cost effective is still valid, if conservative, provided the interest adjustment is 6% or greater.

To state it more simply, we want to insure that we will save enough in 12 years, assuming energy costs increase 10% each year, to more than reimburse us for the money spent to retrofit to accomplish that saving, assuming that we can borrow at 6% interest. If we make the assumption that we need to borrow the money one year before heating fuel savings begin, each dollar we'll save in fuel is multiplied by 18.531 to determine the total dollar value of all fuel saved in the 12 year period. Likewise, each dollar borrowed now to accomplish the retrofit is multiplied by 2.012 (or 2.518 if your interest rate is 8%) to determine the total cost at the end of 12 years.

Another way to use these factors is to determine what amount you can afford to spend to have a break even point at the end of 12 years, given the amount you expect to save by implementing the retrofit. In our previous example we estimated that 4590 therms would be saved by retrofitting a given assumed system from condition 3 to condition 8. Assuming that this school uses natural gas and pays $0.30/therm for fuel, the estimated dollars saved the first year are $1377.00. For break even at the end of 12 years, given the parameters stated previously, we could spend as much as

$$\frac{\$1377.00 \times 18.531}{2.012}$$

or $12,682.50. To accomplish this rerofit will not require nearly that amount. It can probably be done for under $1000.00 provided the basic system is in good operating condition. Restating, in this instance, it will probably cost less than $1000 x 2.012, or $2,012 to save an approximate $1377.00 x 13.531 or $25,517.13 over a 12 year period. The change to condition 8 operation is definitely a good investment for this school.

Adding roof insulation (increasing R from 6.67 to 20) to a condition 8 system makes it a condition 9 system. If one were to retrofit a condition 3 school to a condition 9, approximately

$$\frac{395 - 309}{395} = .218$$

or 21.8% of a "normal" year's heating fuel can be saved. In dollars, at $0.30/therm, this is 34,773 x .218 x .30 = $2274.15. Using the same definition of "cost effective" as above, this savings would justify an expenditure of

$$\frac{\$2274.15\ 18.531}{2.012}$$

or $20,949.46. Since about $1000.00 of that amount would be used to bring the condition 3 system into compliance with condition 8 this leaves approximately $20,000.00 for the roof insulation It is questionable that 40,000 ft.^{2} of roof can be insulated from R-6.67 to R-20 for that amount. It should also be pointed out that less than half of the total savings here was brought about by the insulation itself.

The same condition 3 school can be retrofitted to a condition 10school at an estimated cost of under $7,500.00. Condition 10 incorporates all of the features of condition 8 and adds a boiler optimization panel. This retrofit, in total, would save an estimated

$$\frac{395 - 255}{395} = .354$$

or 35.4% of normal years fuel <u>if properly implemented</u>. In dollars, for the school in these examples, this is 34,773 x .354 x 0.30 = $3692.89 and justifies an investment of

$$\frac{\$39692.89 \times 18.531}{2.012}$$

or $34,012.42 using the above definition of "cost effective." About 37% of the total savings produced by this retrofit were accomplished by the modifications to bring the system up to the condition 8 level (a part of condition 10), but the balance produced by boiler optimization, $2315.83, by itself justifies an investment of $21,329.90, almost three times its estimated cost.

Condition 11 adds roof insulation, to accomplish R-20, to all of the features of condition 10 (reduced outside air; reduced hours of high temperature, ventilating occupied conditions; and boiler operation optimization). It assumes that all necessary adjustments have been made to this panel to take advantage of the reduced heat loss from the building (shorter warmup hours, occupied period boiler shutdown at lower outside temperature, etc.). If our condition 3 school is retrofitted <u>properly</u> to a condition 11 system, the approximate savings are

$$\frac{395 - 225}{395}$$

or .43 or 43%. This is $4585.72/year and justifies an investment of $43,314.52. If $7500.00 is spent on the non-insulation portion of the retrofits, $35,815 is available to pay for the roof insulation. If re-roofing is imminent, this amount may pay the cost of insulation. If so, the overall modification is "cost effective," by our definition, even though the highest cost portion of the total modification (insulation) does not, in this instance, qualify as cost-effective by itself.

E. How Do I Apply the "Heating Fuel Use Factor" to Other School Buildings?

The factors can be applied, with some degree of accuracy, to any similarly constructed single story school (window areas, U values) of substantial size, which is heated and ventilated only (non-air conditioned), located in climates of 4500 to 8000 degree days and which uses a central heating boiler -- steam or hot water. Judgment must be used when applying them to dissimilar structures, i.e., roof insulation would save a smaller percentage of energy in a multi-story school.

It should be remembered that, in all cases, these factors are an approximate measure of heating fuel use, are presented, as interim guidelines only, to assist in energy conservation calculations. The accuracy of these factors depends upon proper and complete implementation of any or all retrofits to a system which is in good, efficient operating condition.

Part VII:

SPECIFYING YOUR RETROFITS

A. A specification should include a complete and comprehensive description of all work to be performed for, and the performance expected from, each retrofit. Include:

1. Combustion efficiency required as the result of any "improved" boiler/burner (or furnace) efficiency retrofit.

   a) Require that a test for certification of compliance be performed in the presence of your authorized representative and that a formal report of the results of this test be provided for your records.

   b) Require complete operation, maintenance and adjustment instructions and wiring diagrams.

2. Complete functional description of any control system change or addition, reconditioning or calibration.

   a) Require complete "as built" control diagrams for the entire control system as modified and installed. Diagrams to include all setpoints for controllers, reset ranges for all reset controllers, and operational ranges of all controlled devices.

   b) Require a maintenance and calibration procedure manual.

   c) Require a final inspection tour with your authorized representative which includes an operational demonstration of satisfactory completion.

4. A definition of the warranty requirements and any required inspections during warranty period.

Part VIII:

INSURING THAT YOU RECEIVE VALUE FOR YOUR EXPENDITURE.

A. Select Reputable Contractors.

B. Use Quality Equipment.

C. Withhold a sufficient percentage of total payment due to insure satisfactory completion. Release when you are certain that:

1. Your authorized representative has inspected every detail of the work and has totally satisfied himself that all requirements and provisions of the specification have been thoroughly complied with. Only your own diligent efforts will insure satisfactory completion of your energy conservation retrofits.

APPENDIX 1.

Public Schools Energy Conservation Measures

MANAGEMENT

SUMMARIES

DRAFT

SAVING SCHOOLHOUSE ENERGY

AMERICAN ASSOCIATION OF SCHOOL ADMINISTRATORS

SAVING SCHOOLHOUSE ENERGY

The project, Saving Schoolhouse Energy, was initiated to demonstrate the desirability of modifying school buildings to achieve energy conservation, and to develop guidelines by which school administrators could identify the most cost-effective energy conserving opportunities in their buildings.

It should be stressed that the emphasis in this study is on cost-effective capital investments for energy conservation. In this type of study the recommended capital investments should not be implemented without first undertaking a comprehensive operational and maintenance program. This implies that sound energy management procedures, such as appropriate scheduling, periodic inspections, and routine maintenance are a continuing function. It further assumes that the human element--all building personnel and students--is cooperative and appreciative of the intent of the function desired.

The project is designed in five phases: (1) site selection and engineering analyses to identify and recommend cost-effective energy conserving opportunities; (2) architectural and design work; (3) installation, construction, or modifications to implement recommendations; (4) monitoring post-modification energy use to verify the projected energy savings; and (5) dissemination of the findings.

This publication summarizes the PRELIMINARY results of Phase 1. The Federal Energy Administration*, which funded this phase, is in the process of approving the final reports.

PHASE 1 -- MANAGEMENT SUMMARIES

PUBLIC SCHOOL ENERGY CONSERVATION MEASURES, REPORTS #1-10

A thorough and comprehensive engineering analysis of ten representative elementary schools across the nation was undertaken to identify cost-effective energy conserving opportunities. The reports of these studies are designed to provide school administrators, engineers, architects, and associated technical personnel with indicators of potential energy savers in similar buildings. The following information is a brief compilation of these findings and abbreviated management summaries of these ten reports.

The demonstration sites selected were constructed between 1925 and 1973, they were multi-level and single-story, and varied from double-loaded corridors to pod and open space schools; and they were widely dispersed geographically (Figure 1). Six of the schools used natural gas as a fuel source; two used oil; and two had gas/oil option. Fuel costs at the time

---

*Federal Energy Administration Contract No. CR-04-60711-00. The views and conclusions contained in this summary and in the engineering reports are those of the authors, and should not be interpreted as necessarily representing the official policies of the U.S. Government.

FIGURE 1. DEMONSTRATION SITES

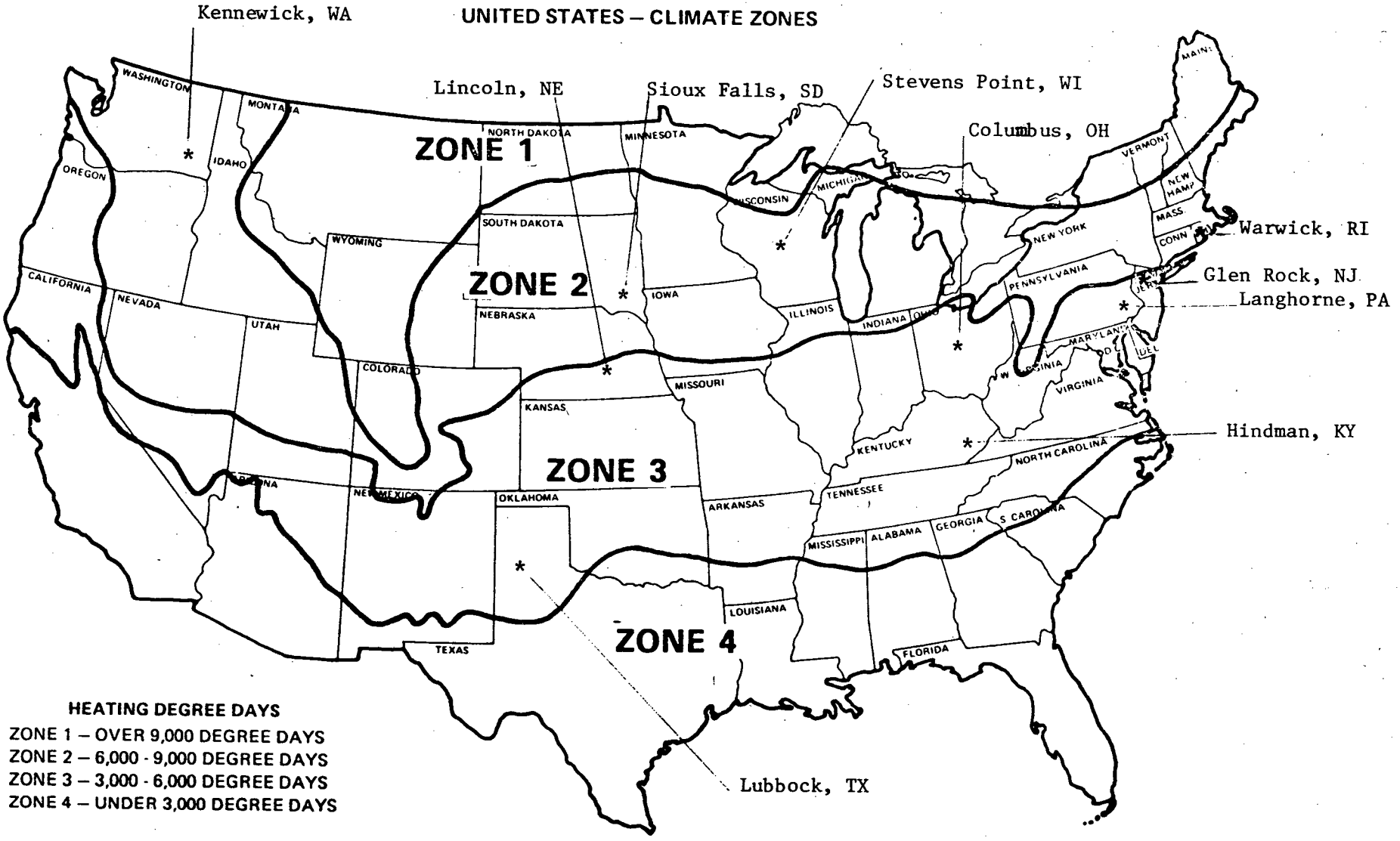

studied ranged from $1.13/MCF to $3.36/MCF for natural gas and was approximately $0.34/gal for oil. All schools were heated; two used unit air conditioners; and one had central air conditioning. All ten schools operated on a standard school year.

Cost-effective energy conserving opportunities have been recommended for implementation at all sites. "Cost-effective" is defined as recovering the cost of investment within 12 years from the predicted energy savings. Calculations are based on current fuel costs with 10 percent per annum escalation adjusted for interest rates. By using the rather conservative 12-year payback period, the recommendations highlight the most cost-effective ECO's that should first be considered by school administrators -- remembering that school districts generally have very limited capital funds and must seek the most advantageous way to spend those funds.

Preliminary results show recommendations vary in cost by site from $1,000 to $80,425 with a mean recommended expenditure of $25,323. Preliminary projections suggest these expenditures will reduce energy consumption an average of 50 per cent across all ten sites. While modifications to the building envelope represent a significant portion of the total recommended expenditures, the most frequent recommendations were to adjust controls and to reduce outside air intake. Generally, they had the quickest recovery rate as well. Table 1 gives an overview of recommendations with associated capital cost estimates and recovery rates by site. Table 2 indicates the specific recommendations and estimated cost by site.

The recommendations made are for existing buildings with the characteristics as described. They offer guidelines for analyzing buildings with similar characteristics. However, suggested energy conserving opportunities must be weighed in terms of the fuel used, its cost and associated savings, as well as capital expenditure considerations. While it is not the primary intent of this report to address new construction concerns, the findings do have implications for such work.

It should also be noted that, in a free market, availability is reflected in cost. However, fuels have not had such a history. As long as fuel costs or supplies are in any way regulated, actual fuel availability may transcend the cost-effective characteristics of a modification.

As soon as the phase 1 engineering reports have been approved by the Federal Energy Administration they will be available at cost. An order blank is attached to this summary for your convenience. Inquiries related to the study should be addressed to:

Dr. Shirley J. Hansen, Director
Saving Schoolhouse Energy
AASA
1801 No. Moore St.
Arlington, VA 22209

or to AASA's consulting engineer:
JCox Associates
Engineers-Consultants
245 West Maple Avenue
Vienna, VA 22180

Following the summary tables is a brief description of each school and more details on the energy conserving opportunities (ECOs) recommended. Also noted are ECOs studied but not recommended, at current fuel rates. As the cost of fuel exceeds the rate used in the calculations, such ECOs may become cost-effective and should be reviewed. Any reconsideration should not view adjusted energy and dollar savings in isolation; materials, labor, interest rates, etc. must also be assessed.

TABLE 1. Demonstration sites, related information; ECOs, associated cost, and recovery rate.

Report No.	School	Location	Year(s) built/ sq. ft.	Fuel	Cost-effective ECOs	Est. Cost	Recovery rate avg. yrs.
1	Scott	Warwick, R.I.	1965,67/ 27,610 (pod)	gas	1.reduce outside air 2.night setback 3.replace boiler 4.add roof insulation	$ 42,800	7
2	Central	Glen Rock, N.J.	1925,39,50/ 45,384	oil	1.reduce outside air 2.replace boiler 3.chg.temperature settings 4.dampers 5.roof insulation 6.reduce infiltration	39,550	6
3	Everitt	Langhorne, Pa.	1954,58,67/ 49,314	oil	1.reduce outside air 2.replace boiler	21,200	7
4	Hindman	Hindman, Ky.	1957,66/ 32,338	gas	1.increase boiler efficiency 2.reduce glass 60%	13,659	6.3
5	Fairmoor	Columbus, Ohio	1949,55/ 42,765	gas	1.shut down unit vents, summer 2.improve boiler efficiency 3.night setback 4.reduce outside air	25,700	3
6	P.F. Brown	Lubbock, Tex.	1949,50,56/ 36,802	gas	1.update & improve controls	1,000	1.5
7	Eastridge	Lincoln, Neb.	1954,55/ 32,029	gas/ oil	1.reset & rebalance air handling units 2.night setback	10,000	6
8	Garfield	Sioux Falls,N.D.	1952,56/ 33,700	gas/ oil	1.reduce outside air 2.night setback 3.improve boiler efficiency	20,000	8
9	Plover Whiting	Stevens Point, Wisc.	1973/44,000 (open space, CAC)	gas	1.improve air conditioning usage schedule 2.improve indoor lighting schedule 3.air temperature reset 4.reduce outside air	3,900	1
10	Washington	Kennewick, Wash.	1957/40,124	gas	1.mechanical adjustments 2.night setback 3.roof insulation 4.reduce glass 5.replace incandescent lighting	80,425	7.5

TABLE 2. Types of recommendations by site.

Given in cost/recovery rate, in years.

Site	Building Envelope			Lighting	Mechanical (HVAC Systems)						
					Boilers		A.C.	Controls			
	Insulate roof	Reduce glass	Infiltration		Improve efficiency	Replace		Reduce O.A.	Night Setback	Change Temp.	Adjust u.v., dampers, controls
1. Scott	$17,300/7					$19,500/9		$6,000/5	$0/I* ($1535)		
2. Central	7,200/7		$6,000/6 1,350/2 louvers			20,000/6		5,000/5		$0/I* ($565)	
3. Everitt						20,000/11		1200/2			
4. Hindman		$ 5600/7			←			↔ $ 8,059/5			→
5. Fairmoor					$10,000/3			7200/4	8500/3		Unoccupied shut down $0/I* (844)
6. Brown											1000/1.5
7. Eastridge									baseboard radiators 8000/8	2000/4	
8. Garfield					9,000/12			3000/3	8000/8		
9. Plover Whiting				Schedule $0/I* ($3214)			Schedule $0/I* (2934)	3000/3		900/6	
10. Washington	35,407/11.8	5447/4.2		Replace incandescent 29,571/9.38							10,000/3.08

* I for "immediate return. ( ) gives estimated first year savings.

DEMONSTRATION SITE NO.1: Harold C. Scott Elementary School
Warwick, Rhode Island

Building Characteristics:

1965 single story pod or modified open space school -- 27,610 sq.ft. with library, multipurpose, and administration areas. Walls are 4" face brick, 4" loose insulation, and concrete block with approximately 22% single pane glass. Roof has 2 1/2" insulrock supported by steel beams.

The building is heated by natural draft gas-fired boilers. Unit ventilators are in all classrooms, library, and multipurpose area. Convectors, radiators, and cabinet heaters are used in offices, toilets, and corridors. Gas consumption averages (85 MBTU/sq.ft.)

Illumination is primarily fluorescent. KWH/sq.ft. for all electrical demands averages 3.88.

400 students, K-6; 25 staff. School day: 9:00 a.m.-3:00 p.m. School year: early September-late June.

Total Annual Energy Consumption: 89.6 MBTU/sq.ft. @ 5550 Deg. Days.

Energy Conserving Recommendations:

- Rebalance unit ventilators to reduce outside air 500 cfm to 250 cfm (R.I. code 10 cfm/stu)
  Estimated cost: $6,000. Recovery Rate: less than 5 yrs.
- Revise occupied/unoccupied cycle - from 4:00 a.m.-4:00 p.m. to 8:00 a.m. to 3:00 p.m.; override for night use
  Estimated cost: $0.00. Recovery Rate: immediate. Projected savings 1st year: $1,535
- Replace gas-fired boilers with oil-fired boilers
  Estimated cost: $19,500. Recovery rate: 9 years
- Add roof insulation during re-roofing
  Estimated Cost: $17,300. Recovery rate: 7 years

All recommendations: $42,800 (est.). Recovery: 7 years.

ECOs not recommended warranting future review: double glazing all windows

# # # #

DEMONSTRATION SITE NO. 2: Central Elementary School
Glen Rock, New Jersey

Building Characteristics:

Constructed 1925, 2 levels; 1939, one level addition similar construction. 45,384 sq. ft. Wall is 4" face brick, 2" air, 8" concrete block with plaster interior finish with 35% glass, double hung single pane. Roof is built up roofing over plywood deck; 3' drop in interior ceiling finished with plaster board or acoustical tile.

1958 addition is single level. Wall is 4 "face brick on 8" concrete block with 60% single pane casements. Roof is built up over wood sheathing with air space, 2" insulation and acoustical tile on interior surface.

Heated by (2) 1925 oil-fired low steam boilers (converted from coal). Unit ventilators and radiators in classrooms and auditorium. One pump for original structure and first addition; second pump for '58 addition -- controlled manually. Fuel consumption averages 0.94 gal/sq.ft.(131.6 MBTU/sq.ft.)

Illumination is primarily fluorescent. KWH/sq.ft. for all electrical demands averages 3.5.

300 Students, K-6; 30 staff (includes district administration personnel). School day 9:00 a.m.-3:00 p.m.; staff 8:00 a.m. to 6:00 p.m. School year: early September-late June. 15 adults 8:00 a.m.-6:00 p.m. in July. Vacated in August.

Total Annual Energy Consumption: 158 MBTU/sq.ft. @ 4590 Deg. Days.

Energy Conserving Recommendations:

- Reduce outside air
  --500 cfm to 175 cfm (state code)
  Estimated cost: $5,000. Recovery rate: 5 years
- Replace boiler with modular hot water boilers
  Estimated cost: $20,000. Recovery rate: 6 years.
- Reduce thermostat settings: 70 F to 68 F
  Estimated cost: $0.00 (maintenance). Recovery rate: immediate. Estimated savings 1st year: $565.00
  Install motor operated damper to close louvers and roof ventilators in auditorium
  Estimated cost: $1,350. Recovery rate: 2 years.
- Install roof insulation: -- blanket type in existing 3' airspace. Estimated cost: $7,200. Recovery rate: 7 years.
- Infiltration reductions:
  --weather stripping windows and doors
  --automatic damper at roof ventilator
  Estimated cost: $6,000. Recovery rate: 6 years.

All recommendations: $39,550 (est.). Recovery rate: 6 years

ECOs not recommended warranting future review: institute warm-up cycle with dampers closed.

# # # #

DEMONSTRATION SITE NO. 3: Samuel Everitt Elementary School
Langhorne, Pennsylvania

Building Characteristics:

Constructed 1954 with two additions (1958, 1967); all have similar structure. 49,314 sq.ft. Walls are 4" face brick, air space, and 8" concrete block with approximately 45% glass in single pane casements. It has a built-up roof over 3 1/2" Insulrock supported by exposed steel beams.

Heated by (2) oil-fired hot water boilers. There is a 5.5 ton air conditioning unit for office area controlled by a 7 day time clock and two manually controlled window air conditioners for the library. Unit ventilators and radiators are used throughout the building. Fuel consumption .68 gals/sq.ft. (93.8 MBTU/sq.ft.).

Illumination is primarily fluorescent. KWH/sq.ft. for all electrical demand averages 3.27.

Everitt has 559 students, K-5. School day: 9:00 a.m. to 3:00 p.m. School year: early September to Mid-June. Used five nights per week and the office all summer.

Total Annual Energy Consumption: 108.9 MBTU/sq.ft. @ 4590 Deg. Days.

Energy Conserving Recommendations:

- Reduce outside air intake
  --500 cfm to 175 cfm (state req.)
  Estimated cost: $1,200. Recovery rate: 2 years.
- Replace boilers with modular hot water boilers
  Estimated cost: $20,000. Recovery rate: 11 years.

All recommendations: $21,200 (est.). Recovery rate: 7 years

ECOs not recommended warranting future review: double pane glass, and/or panel over clearstory glass.

# # # #

DEMONSTRATION SITE NO. 4: Hindman Elementary School
Hindman, Kentucky

Constructed in 1957 with addition of similar structure in 1966. Walls are 4" face brick, 2" air space, and 4" concrete block with 49% glass of 1/8" plate glass with aluminum frame. The roof is 1 1/2" rigid insulation, air space, and 2 3/4" blanket fiberglass on steel deck. Total area is 32,338 sq.ft.

Hindman is heated by a gas-fired cast iron sectional boiler with forced hot water circulating through convectors. Four sections were added in 1966 to accomodate addition. Classrooms do not have thermsotats. Building is controlled by zone of exposure. Annual fuel consumption .8CCF/sq.ft. (80 MBTU/sq.ft.).

Illumination is primarily fluorescent with level at approximately 60 foot-candles. Annual electrical consumption 2.58 KWH/sq.ft.

611 students, 1-7, and 32 staff occupy building from 8:30 a.m. to 3:30 p.m. 180 days, mid-August to mid-May.

Total Annual Fuel Consumption: 88.4 MBTU/sq.ft. @ 3320 Deg. Days.

Energy Conserving Recommendations:

- Increase boiler efficiency to 80%, reduce outside air, and repair zone control
  --clean, adjust boiler; establish appropriate controls
  --set unit ventilators for reduced outside air; close dampers on night set back
  repair and correct zone thermostats and 3-way valves
  Estimated cost: $8,059. Recovery rate: 5 years.
- Reduce glass by 60%.
  Estimated cost: $5,600. Recovery rate: 7 years.

All recommendations: $13,659 (est.). Recovery rate: 6.3 years

---

# # # #

DEMONSTRATION SITE NO. 5: Fairmoor Elementary
Columbus, Ohio

Original structure build in 1949 was 23,500 sq.ft. on 3 levels. The walls are 4" brick face on 8" concrete block with 28% glass, N/S facing. Roof was rehabilitated 3 years ago with 2 1/2" insulating board on steel deck.

A 19,200 sq.ft. addition was added in 1955 bringing total square footage to 43,765 sq.ft. The addition is a single level. The walls are 4" brick face on 12" concrete block with 58% glass, E/W facing. The addition roof consists of built up roofing on 2 1/2" Tectum panels with no ceilings.

Fairmoor is heated by 2 gas-fired boilers converted from coal. There are unit ventilators in all classrooms -- steam in original section, hot water in addition. Therms/sq.ft. averages 1.5. (150 MBTU/sq.ft.).

Illumination is primarily fluorescent with mercury vapor and incandescent in multipurpose room. Electricity demand is 3.56 KWR/sq.ft.

475 students, K-6 and 30 staff occupy the building 8:45 a.m. to 3:15 p.m. from early September to mid-June.

Total Annual Energy Consumption: 180.6 MBTU/sq.ft. @ 5280 Deg. Days.

<u>Energy Conserving Recommendations</u>:

- Shut down unit ventilators in unoccupied summer months
  Estimated cost: $0.00. Recovery rate: immediate ($844 1st year)
- Improve boiler efficiency
  --replace burners
  --reduce flue size
  --install boiler controls to fire on demand
  Estimated cost: $10,000. Recovery rate: 4 years.
- Night set back
  --install time clock to shut unit ventilators, close dampers, stop exhaust fans
  Estimated cost: $8,500. Recovery rate: 3 years.
- Adjust unit ventilators to reduce outside air intake
  --air balance; upgrade controls
  Estimated cost: $7,200. Recovery rate: under 4 years.

All recommendations: $25,700 (est.). Recovery rate: under 3 years

---

ECOs not recommended warranting future review: double glazing, insulate addition roof, add double doors, or reduce glass.

# # # #

DEMONSTRATION SITE NO. 6: P. F. Brown
Lubbock, Texas

Original 1949 structure and 1950 addition comprise 25,258 sq.ft. single level. Of similar construction - walls are 4" face brick on 8" structural tile with interior plastered with 16.5% glass, N/S facing. Roof is 3" concrete deck, ceiling plastered.

1956 addition brought total footage to 36,802 sq.ft. This addition is essentially the same with the exception of acoustical board on ceiling and the double hung windows have an E/W orientation.

P. F. Brown has one gas-fired, fire tube, low pressure steam boiler. There are no unit ventilators. Outside air by infiltration only. Gas consumption averages 0.91 MCF/sq.ft. (91 MBTU/sq.ft.).

Illumination is primarily fluorescent. Total electrical demand averages 2.185 KWH/sq.ft

388 students, K-6, and 48 staff occupy the building 8:00 a.m. to 3:00 p.m. late August through May.

Total Annual Energy Consumption: 102.5 MBTU/sq.ft. @ 3150 Deg. Days.

Energy Conserving Recommendations:

- Update and improve controls

Estimated cost: $1,000. Recovery rate: 1.5 years

ECOs not recommended warranting future reveiw: increase efficiency of heating plant.

Adding roof insulation, replacing glass blocks, and contracting weather stripping all had recovery rates over 50 years.

# # # #

DEMONSTRATION SITE NO. 7: Eastridge Elementary School
Lincoln, Nebraska

Constructed in 1954 and added in 1955, Eastridge has essentially the same structure. Walls are 4" brick on 4" cavity block with 4" face brick veneer. Glass is single pane clear and frosted above, 27% of wall with predominance N/S facing. Roof is built up tar and gravel on 3 1/2" cedar deck, 3/4" acoustical tile ceiling.

Eastridge is heated by 2 gas/oil fired hot water boilers. It has hot water baseboard radiators and hot water central air handling units.

Annual fuel consumption: .71 CCF/sq.ft. (71 MBTU/sq.ft.).

Illumination is fluorescent. Annual electric 3.7 KWH/sq.ft.

300 students, K-6, occupy the building from 8:40 a.m. to 2:40 p.m.; 25 staff members from 8:00 a.m.-4:30 p.m. for 178 days each year.

Total Annual Energy Consumption: 83 MBTU/sq.ft. @ 6040 Deg. Days.

Energy Conserving Recommendations:

- Resetting and rebalancing air handling unit
  Estimated cost: $2,000. Recovery rate: 4 years
- Night set back for baseboard radiation
  Estimated Cost: $8,000. Recovery rate: 8 years

Estimated cost: $10,000. Recovery rate: 6 years

ECOs not recommended warranting future review: add roof insulation, reduce glass by 17%, or add exterior wall insulation.

# # # #

DEMONSTRATION SITE NO. 8: Garfield Elementary School
Sioux Falls, South Dakota

Constructed in 1952 and added to in 1956 for a total of 33,700 sq.ft. Garfield has two levels. Walls are 4" face brick on 8" concrete block with about 30% glass. Of this glass area, 70% is glass block and the remainder is plate. The roof is 4 ply pitch and felt, 2" semi-rigid insulation, and 1 1/2" metal deck.

Garfield is heated by 2 gas/oil fired hot water boilers. Hot water baseboards and hot water central air handling units handle the heating and ventilating requirements. Annual fuel consumption: 94 CCF/sq.ft. (94 MBTU/sq.ft.).

Illumination is primarily fluorescent. Annual electric usage 3.08 KWH/sq.ft.

500 students, K-6, occupy the building 8:30 a.m. to 3:15 p.m.; 26 full time and 8 part time staff are there from 8:30 a.m. to 4:00 p.m. for 180 days per year.

Total Annual Energy Consumption: 109.7 MBTU/sq.ft. @ 7860 Deg. Days.

Energy Conserving Recommendations:

- Reduce outside air to minimum code (5 cfm)
  Estimated cost: $3,000. Recovery rate: 3 years
- Night set back system
  Estimated cost: $8,000. Recovery rate: 8 years
- Improve boiler efficiency
  Estimated cost: $9,000. Recovery rate: 12 years

All recommendations: $20,000 (est.). Recovery rate: 8 years

ECOs not recommended warranting future review: add roof insulation, add exterior wall insulation, or reduction of glass.

# # # #

DEMONSTRATION SITE NO. 9: Plover Whiting Elementary School
Stevens Point, Wisconsin

Plover Whiting is an open space school of 44,000 sq.ft. constructed in 1973. It has three distinct wall types: (1) 3/8" diagonal wood siding, 1" rigid insulation, 3/4" air space, and 8" concrete block; (2) as "1" with 12" concrete block around gym; and (3) 3/8" wood siding, 3/8" gypsum sheathing, 2" air space, 3 1/2" batt insulation on 6" stud wall with 5/8" GWB on interior. Glass averages 6.9%. Roof is built up, 1 1/2" rigid insulation, 1 1/2" metal deck, and 3/4" acoustical ceiling tile.

Plover Whiting is heated/cooled by 2 forced draft gas-fired boilers and 120 ton reciprocating chiller with air cooled condensing. Classrooms and multi-purpose are heated, ventilated and air conditioned by 3 central air handling units. Uses average .9 therms/sq.ft. (90 MBTU/sq.ft.).

Illumination is primarily fluorescent. Electrical load demand is approximately 10.5 KWH/sq.ft.

472 students, K-6, and 28 staff occupy the building from 9:00 a.m. to 3:30 p.m. for approximately 180 days, late August to mid-June.

Total Annual Energy Consumption: 132 MBTU/sq.ft. @ 7590 Deg. Days.

Energy Conserving Recommendations:

- Improve air conditioning usage schedule
  Estimated cost: $0.00. Recovery rate: immediate ($2,934 1st year)
- Improve indoor lighting usage schedule
  Estimated cost: $0.00. Recovery rate: immediate ($3,214 1st year)
- Air temperature reset mixed and supply
  Estimated cost: $900. Recovery rate: 6 years
- Reduce outside air intake to minimum code (5 cfm/person) --rebalance outside, return, and exhaust dampers
  Estimated cost: $3,000. Recovery rate: 3 years

All recommendations: $3,900 (est.)
Recovery rate (investments only): 2 years
all recommendations: 8 months.

ECOs not recommended warranting future review: add roof insulation and/or add wall insulation.

# # # #

DEMONSTRATION SITE NO. 10: Washington Elementary School
Kennewick, Washington

Washington is a single level structure built in 1957 with no addition. The three wing double loaded corridors has a total area of 40,124 sq.ft. Walls are precast panels and 3/4" rigid insulation with 50% glass (1/4" plate). The roof is built up roofing with 2" rigid insulation on steel deck with 2% sky-light.

Heating is by a gas-fired induced draft steel boiler. Distribution is on 3 zones with unit ventilators in classrooms, multipurpose, and administrative areas. Consumption averages .87 therms/sq.ft. (86.9 MBTU/sq.ft.).

Illumination is incandescent throughout. Total electrical demand is approximately 6.14 KWH/sq.ft.

503 students, K-6, occupy the building 9:00 a.m. to 3:15 p.m. and the staff from 8:00 a.m. to 3:45 p.m. from early September to mid-June.

Total Annual Energy Consumption: 107.8 MBTU/sq.ft. @ 5300 Deg. Days.

Energy Conserving Recommendations:

- Mechanical adjustments and maintenance
  --bring outside air up to code (5 cfm)
  --bring pump, filters, coils, fan motors, and damper linkages to maximum efficiency
  --calibrate and reduce thermostat settings
  --provide night setback capability
  Estimated cost: $10,000. Recovery rate: 3.08 years
- Add roof insulation in re-roofing process
  --3" rigid insulation
  Estimated cost: $35,407. Recovery rate: 11.8 years
- Reduce glass by 28% - fixed window modules with N, E or W exposure
  Estimated cost: $5,447. Recovery rate: 4.2 years
- Replace incandescent lighting with fluorescent at code (50 classroom, 20 corridors)
  Estimated cost: $29,571. Recovery rate: 9.38 years

All recommendations: $80,425 Recovery rate: 7.5 years

ECOs not recommended warranting future review: change from gas-fired to electric boiler.

ORDER FORM

Public School Energy Conserving Measures

Report No.

1. SCOTT: *1965,67 pod; replace boilers, add roof insulation, controls ($37,800/5 yr. return)* _____
2. CENTRAL: *1925,39,50; replace boilers, roof insulation, reduce infiltration, controls ($39,550/5 yr. return)* _____
3. EVERITT: *1954,58,67; replace boiler, reduce outside air ($21,200/9 yr. return)* _____
4. HINDMAN: *1957,66; increase boiler efficiency, reduce outside air, night set back, controls, reduce glass 60% ($13,659/6.3 yr. return)* _____
5. FAIRMOOR: *1949,55; improve boiler efficiency, revise unoccupied settings, reduce outside air, night set back ($25,700/3 yrs. return)* _____
6. P.F. BROWN: *1949,50,56; update and improve controls ($1000/1.5 yr. return)* _____
7. EASTRIDGE: *1954,55; reset and rebalance air handling units; night set back ($10,000/5 yr. return)* _____
8. GARFIELD: *1952,56; reduce outside air, night set back, improve boiler efficiency ($20,000/10 yr. return)* _____
9. PLOVER WHITING: *1973; air condition schedule, indoor lighting schedule, air temperature reset, reduce outside air ($3,900/1 yr. return)* _____
10. WASHINGTON: *mechanical adjustments, night set back, roof insulation, reduce glass, replace incandescent lighting ($80,425/7.5 yr. return)* _____

No. Reports Requested _____

Each report at cost ($2.50) including postage and handling as soon as cleared by Federal Energy Administration.

Enclosed is $_____(# reports X $2.50)

Make check payable to AASA-Energy and mail to:

Dr. Shirley J. Hansen
AASA-OGR
1801 North Moore Street
Arlington, VA. 22209

U.S.GPO:1979-689-058 (P) 47

This report was done with support from the Department of Energy. Any conclusions or opinions expressed in this report represent solely those of the author(s) and not necessarily those of The Regents of the University of California, the Lawrence Berkeley Laboratory or the Department of Energy.

Reference to a company or product name does not imply approval or recommendation of the product by the University of California or the U.S. Department of Energy to the exclusion of others that may be suitable.

TECHNICAL INFORMATION DEPARTMENT
LAWRENCE BERKELEY LABORATORY
UNIVERSITY OF CALIFORNIA
BERKELEY, CALIFORNIA 94720