LBL-9229 c.2
Preprint

Lawrence Berkeley Laboratory

UNIVERSITY OF CALIFORNIA, BERKELEY, CA

Materials & Molecular Research Division

Submitted to the Journal of the American Chemical Society

VOLATILITY AND MOLECULAR STRUCTURE OF NEPTUNIUM (IV) BOROHYDRIDE

RECEIVED
LAWRENCE
BERKELEY LABORATORY

JUL 12 1979

LIBRARY AND
DOCUMENTS SECTION

Rodney H. Banks, Norman M. Edelstein, Brock Spencer,
David H. Templeton and Allan Zalkin

June 1979

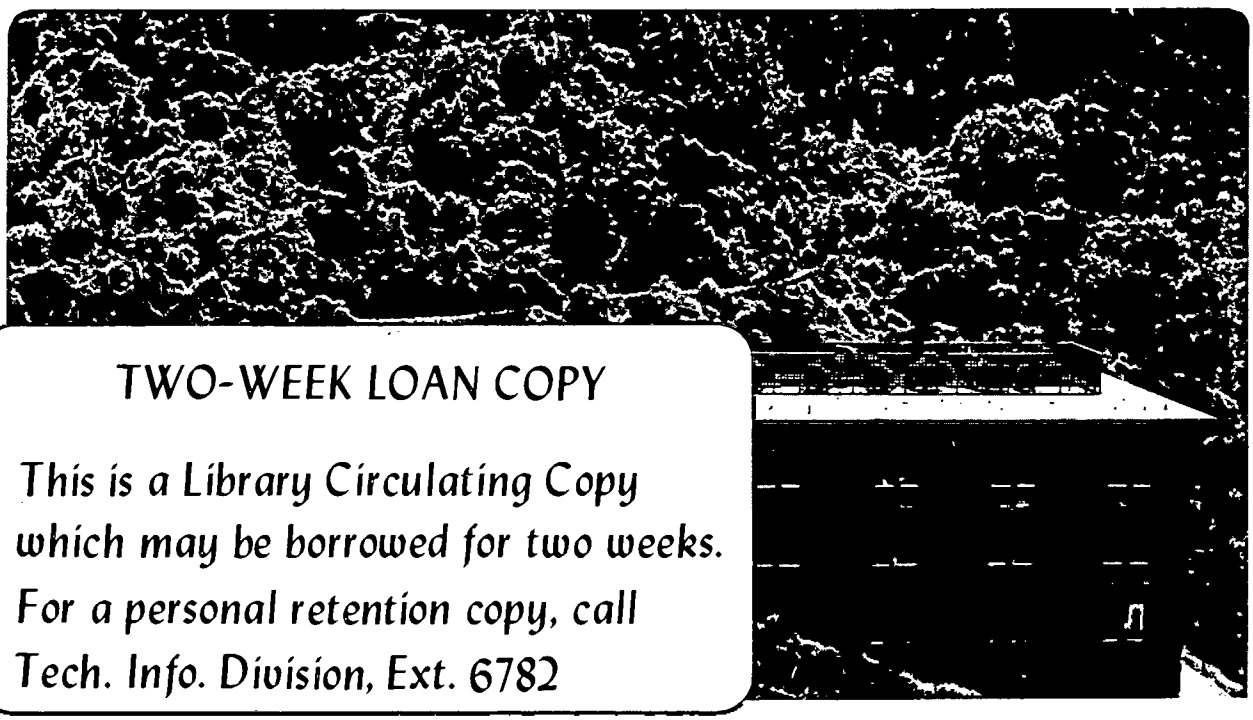

TWO-WEEK LOAN COPY

This is a Library Circulating Copy which may be borrowed for two weeks. For a personal retention copy, call Tech. Info. Division, Ext. 6782

Prepared for the U. S. Department of Energy
under Contract W-7405-ENG-48

LBL-9229 c.2

DISCLAIMER

This document was prepared as an account of work sponsored by the United States Government. While this document is believed to contain correct information, neither the United States Government nor any agency thereof, nor the Regents of the University of California, nor any of their employees, makes any warranty, express or implied, or assumes any legal responsibility for the accuracy, completeness, or usefulness of any information, apparatus, product, or process disclosed, or represents that its use would not infringe privately owned rights. Reference herein to any specific commercial product, process, or service by its trade name, trademark, manufacturer, or otherwise, does not necessarily constitute or imply its endorsement, recommendation, or favoring by the United States Government or any agency thereof, or the Regents of the University of California. The views and opinions of authors expressed herein do not necessarily state or reflect those of the United States Government or any agency thereof or the Regents of the University of California.

LBL-9229

VOLATILITY AND MOLECULAR STRUCTURE OF NEPTUNIUM (IV) BOROHYDRIDE

by Rodney H. Banks, Norman M. Edelstein*, Brock Spencer[1], David H. Templeton* and Allan Zalkin*

Materials and Molecular Research Division
Lawrence Berkeley Laboratory and
Department of Chemistry
University of California
Berkeley, California 94720

JUNE 1979

ABSTRACT

The structure of $Np(BH_4)_4$ was determined by single crystal x-ray diffraction methods at 130 K. The crystals are tetragonal, space group $P4_2/nmc$; a = 8.559(9) Å, c = 6.017(9) Å, Z = 2. R = 0.114 for 352 reflections (Mo Kα radiation). The 4 borohydride ions are disposed tetrahedrally about the Np with Np-B distances of 2.46(3) Å. The boron atoms are connected to the Np atom with triple hydrogen bridge bonds similar to the terminal borohydrides in uranium borohydride. Hydrogen atoms were observed in the Fourier maps and refined. This molecular structure is similar to that found for Hf and Zr borohydride, but the space group is different. The vapor pressure, 10 mm Hg at 25°, was measured in the range of -5°C to 25°C using a Bourdon gauge.

INTRODUCTION

The relationship between the physical properties and structure of metal borohydrides has been studied extensively since the first preparation of metal compounds containing the BH_4^- anion.[2] One property which has attracted attention is the high volatility exhibited by some of them.[3,4] No univalent metal borohydride is volatile and only a few of the lighter bis- and tris-borohydrides show volatility below room temperature.[5] Tetravalent Th, Pa, and U form borohydrides of low volatility, while Zr, Hf, Np, and Pu give tetrakis-borohydrides of greater volatility.

The crystal structures of these seven compounds fall into three types. Thorium,[3a] protactinium,[4] and uranium[6,7] borohydrides show one structure type which has been studied by x-ray and neutron diffraction methods for $U(BH_4)_4$. The 14 coordinate uranium is surrounded by six BH_4^- groups, two of which are triply hydrogen bridge bonded to the metal with a U-B distance of 2.53 Å. The other four borohydride groups are bonded to the uranium by double hydrogen bridges giving a longer U-B distance of 2.87 Å. These four bridging BH_4^- units use their remaining two hydrogens to link adjacent U atoms in a polymeric structure of C_2 symmetry at uranium.

Neutron diffraction results on $Hf(BH_4)_4$[8] and an X-ray diffraction study on the isostructural $Zr(BH_4)_4$[9] have shown that these molecules crystallize into a different structure type and are monomeric. The metal atom is bonded to four tetrahedrally arranged borohydride groups

by triple hydrogen bridge bonds giving the molecule rigorous T_d symmetry. The coordination sphere around Zr or Hf consists of only 12 hydrogen atoms. The corresponding Zr-B and Hf-B distances are 2.34(3) Å and 2.28(1) Å, respectively.[8a,9]

The third type,[4] displayed by $Np(BH_4)_4$ and $Pu(BH_4)_4$, is somewhat similar to that of Zr and Hf borohydrides and is discussed here in detail.

In order to put the volatility of the third structure type on a quantitative basis, vapor pressure measurements of $Np(BH_4)_4$ were carried out as a function of temperature, yielding various thermodynamic quantities. An X-ray crystallographic investigation of $Np(BH_4)_4$ at 130K was undertaken to determine its detailed molecular structure.

EXPERIMENTAL

Vapor Pressure Measurement

Neptunium (IV) borohydride was prepared and purified as described previously.[4] The extreme chemical reactivity of $Np(BH_4)_4$ precluded the use of a mercury manometer and only an all-glass-and-Teflon Bourdon gauge was found satisfactory for these measurements. The exposed surfaces of the gauge were passivated with the Np borohydride vapor prior to use to minimize a decomposition reaction which evolves hydrogen and diborane.[4] Excess $Np(BH_4)_4$ was condensed into the passivated gauge

and the gauge was pumped out at -78°C. At various temperatures, the compound was allowed to vaporize and deflect a pointer, whose initial position was precisely determined by a cathetometer. Shortly after equilibrium was established, the pointer was nulled to its original position by pressurizing the outer chamber of the gauge with argon. The argon pressure, as measured by a standard pressure gauge, then equaled the vapor pressure of the $Np(BH_4)_4$. Care was taken to remove all traces of H_2 and B_2H_6 before and after each measurement. Vapor pressure readings were taken at room temperature and below until the vapor pressure of the compound approached the sensitivity of the Bourdon gauge.

Crystal Preparation

A sample of the dark green liquid $Np(BH_4)_4$ was sealed into a 0.3 mm ID quartz capillary and stored in liquid nitrogen prior to use. The capillary was mounted on a Picker FACS-I automated diffractometer equipped with a Syntex LT-1 temperature controller. Slow cooling through the melting point resulted in substantial supercooling followed by rapid freezing giving polycrystalline samples. Partial melting of the solid followed by slow refreezing provided a crystal suitable for structure determination.

X-ray Diffraction

During unit cell measurements and intensity data collection, the sample was maintained at 130 ± 5K, as determined from prior calibration

with a thermocouple in place of the capillary.

Unit cell parameters were obtained from carefully centered settings on the $K\alpha_1$ peaks of the (14,0,0), (0,14,0), and (0,0,10) reflections using graphite-monochromated Mo radiation ($\lambda(K\alpha_1)$ = 0.70930 Å). Cell dimensions obtained before and after intensity data collection did not differ significantly and yielded the values a = 8.559(9) Å and c = 6.017(9) Å for the tetragonal unit cell. The full width at half height for ω-scans of low-angle reflections before and after intensity data collection was typically 0.15°.

Intensity data were collected using the θ-2θ scan technique to 68° in 2θ for positive h, k, and ℓ with scans from 0.9° below $K\alpha_1$ to 0.9° above $K\alpha_2$ and with background counts of four seconds at each end of the scan. Two standards, measured every 100 reflections, showed a decrease in intensity of 17% during the course of data collection and the measured intensities of the 1000 reflections were corrected accordingly. Crystal faces were not clearly visible through the capillary so an absorption correction was not attempted (μ is 40 cm^{-1} and r is approximately 1×10^{-2} cm). The intensities were corrected for Lorentz and polarization effects. When the double data set was merged, the estimated standard deviation of the intensity of a reflection based on counting statistics was replaced by the scatter in measured intensities for 137 reflections (out of a total of 511 unique reflections) for which the scatter exceed four times the estimated standard deviations. The diffraction symmetry and systematically absent reflections were consistent with the space group $P4_2/nmc$.

With Z = 2, the Np atom must occupy a special position with $\bar{4}2m$ symmetry as noted from the earlier X-ray powder data[4] which showed a body-centered pattern and intensities consistent with Np at the origin. The single crystal experiment detected the weak non-body-centered reflections. The boron atom was initially placed 2.5 Å from the neptunium in an eightfold position on a mirror plane by analogy with the tetrahedral $Hf(BH_4)_4$ structure.[8] After several cycles of least-squares refinement with anisotropic thermal parameters for Np and an isotropic thermal parameter for B, inspection of the agreement between observed and calculated structure factors for the strongest reflections suggested that an extinction correction was appropriate. An empirical correction was applied where $F_{corr} = F_{obs}(1 + 2.4 \times 10^{-7} I)$; F_{corr} and F_{obs} are the corrected and observed structure factors and I is the observed intensity. Several additional cycles of least-squares refinement with anisotropic thermal parameters for both Np and B then converged with $R = \Sigma||F_o|-|F_c||/\Sigma|F_o| = 0.115$ for nine parameters and 352 data with $F^2 > \sigma(F^2)$.

A difference-Fourier map was calculated to see whether the hydrogen atoms could be located. Peaks with an electron density of approximately one electron per $Å^3$ were found in positions expected for three bridging hydrogens and one terminal hydrogen as in the structure of $Hf(BH_4)_4$. An initial attempt to refine the hydrogen atom positions would not converge and an attempt to refine a single isotropic thermal parameter converged to a negative value. Finally, with all hydrogens given the

same fixed isotropic thermal parameter and with positional parameters allowed to shift only half of the indicated full matrix value in each cycle, several additional cycles of least-squares refinement converged smoothly to the values given in Table II. The full matrix least-squares program minimizes the function $\Sigma w|\Delta F|^2/\Sigma wF_o^2$ where the assigned weights $w = [\sigma(F)]^{-2}$ were derived from $\sigma(F^2) = [S^2 + (pF^2)^2]^{1/2}$ where S^2 is the variance due to counting statistics and p = 0.10. The final R-factor was 0.114 for 16 parameters and 352 data with $F^2 > \sigma(F^2)$ and 0.125 for all 511 data. The weighted $Rw = (\Sigma w(|F_o|-|F_c|)^2/\Sigma wF_o^2)^{1/2}$ was 0.140 and the estimated standard deviation for an observation of unit weight was 2.15. The scattering factors used were those of Doyle and Turner[10] for neutral boron, those of Stewart, Davidson, and Simpson[11] for hydrogen, and those from the International Tables[12] for Np^{4+} corrected for anomalous dispersion.

RESULTS AND DISCUSSION

Neptunium borohydride is a volatile compound which moves about easily in a vacuum line and exerts 10 mm Hg vapor pressure at room temperature. Using the data obtained from the vapor pressure measurements, linear plots (Fig. 1) were found for the equation $\log p_{mmHg} = -A/T + B$, where T is in degrees K, for liquid and for solid $Np(BH_4)_4$. Least squares lines were fitted to the observed points and several

thermodynamic quantities were calculated. These, along with some other properties of the metal tetrakis-borohydrides are listed in Table I.

The primary properties of these metal tetrakis-borohydride reflect the polymeric or monomeric nature of their solid state structures. The polymeric thorium and uranium borohydrides are characterized by relatively low volatility, high-melting points accompanied by decomposition, and low solubility in nonpolar and non-coordinating organic solvents such as n-pentane.[13] The monomeric Hf, Zr and Np borohydrides have much lower melting points and rapid decomposition does not occur upon melting. Their vapor pressures are about two orders of magnitude greater and they are soluble in n-pentane in all proportions. All of the metal tetrakis borohydrides are monomeric in the gaseous state. At room temperature $Pa(BH_4)_4$ is insoluble in $Zr(BH_4)_4$,[14] but when the mixture is heated slightly above the sublimation temperature of $Pa(BH_4)_4$ the liquid turns deep yellow as the polymeric structure is disrupted and the Pa compound dissolves.

Despite the close similarity between the ionic radii of Np^{4+} and U^{4+} (the difference is 0.02 Å)[15] as compared to those of Np^{4+} and Zr^{4+} (difference ~0.14 Å),[13] the solid state structure and physical properties of $Np(BH_4)_4$ resemble those of $Zr(BH_4)_4$. The gas-phase and low-temperature solid-state infrared and Raman spectra of $Np(BH_4)_4$ are almost identical (except for mass effects) to those of $Zr(BH_4)_4$ showing the two structures are similar.[4]

The monomeric nature of solid $Np(BH_4)_4$ is established by the X-ray diffraction results. The molecule is shown in the ORTEP diagram (Fig. 2)

with the structural information listed in Tables III and IV. The neptunium atom is coordinated to four borohydrides through three bridging hydrogens each, with all B-Np-B angles being tetrahedral to within less than one estimated standard deviation, even though the crystallographic site symmetry for Np does not require regular tetrahedral geometry.

Bernstein et al.[6a] observed that bridging borohydride groups give larger M-B distances than do the terminal ones in $U(BH_4)_4$. They suggested than an "ionic radius" of a terminal BH_4^- group be approximately 1.3(1) Å and that of a bridging BH_4 group be about 1.6(1) Å. Using the value from Shannon and Prewitt[15] for the radius of Np^{4+} and the Np-B distance of 2.46 Å, it is found that the BH_4^- radius is 1.34 Å. This is in good agreement with the values calculated for other triply bridged borohydride groups: $U(BH_4)_4$ 1.38 Å,[6a] 1.37 Å;[16] $Zr(BH_4)_4$ 1.36 Å,[8] 1.33 Å;[17] $Hf(BH_4)_4$ 1.31 Å.[8a]

The borohydride group in $Np(BH_4)_4$ is tetrahedral within the estimated standard deviation with an average B-H bond length of 1.1(2) Å. Neutron diffraction investigations on "covalent" $U(BH_4)_4$ and $Hf(BH_4)_4$ revealed departures from T_d symmetry of the tridentate BH_4^- groups manifesting themselves as wider H_t-B-H_b (113°) and smaller H_b-B-H_b (106°) angles with respect to the tetrahedral angle, and as a shorter B-H_t (1.15 Å) distance compared to the longer B-H_b (1.24 Å) distances. Unfortunately the present X-ray diffraction results are not accurate enough to determine if these deviations from T_d symmetry are present in $Np(BH_4)_4$. A neutron

structure determination of the "ionic" KBH_4 compound[18] indicated that the BH_4^- group was symmetrical with all B-H bond lengths being 1.260(2) Å and the H-B-H angle of 109.5°. Whether the distortion of the BH_4^- groups in these compounds can be used to test for covalency[5b] must await further neutron diffraction results.

Although the hydrogen atom positions have large estimated standard deviations and the inclusion of the hydrogen atoms in the refinement lowered the R-factor a trivial amount, the hydrogen atoms refined to chemically reasonable positions. The terminal hydrogen atom is properly oriented away from the neptunium with a Np-B-H(1) angle of 179(16)°. The 12 bridging hydrogen atoms around the neptunium are all 2.5 Å away from it and form a coordination polyhedron in which each hydrogen atom is 1.8 Å from two other hydrogen atoms in the same borohydride group, and 2.5 Å from two hydrogen atoms in adjacent borohydride groups. This polyhedron is similar to the cube-octahedron which describes the coordination in the cubic-closest-packing structure with six neighbors in a plane, three above, and three below. The inequality of the H-H distances corresponds to a tetrahedral distortion of this figure which changes the square faces into rectangles and the triangular faces into four larger ones and four smaller ones.

James et al.[19] have suggested that $Zr(BH_4)_4$ may be of slightly lower T symmetry which is obtained by rotating all four BH_4^- groups from the staggered orientation by an angle of less than 60° about the Zr-B vector. They based their agrument on an uncertain interpretation of an electron diffraction study on <u>gaseous</u> $Zr(BH_4)_4$[17] and on weak

infrared transitions[19b] which they assigned as fundamental modes. However, the staggered arrangement of bridging hydrogen atoms offers the least amount of inter-hydrogen repulsion. Our work gives no evidence for symmetry lower than T_d for $Np(BH_4)_4$.

If the metal ion size is the determining factor in the number of bridging hydrogen atoms that can be accomodated in the coordination sphere of the metal in these borohydrides, this work pinpoints the transition from 14 to 12 coordination between U^{4+} and Np^{4+}, a difference of 0.02 Å in ionic radius.

The solid-state molecular structure of $Np(BH_4)_4$ has the same basic geometry as $Hf(BH_4)_4$ and $Zr(BH_4)_4$ yet the crystal structures are different. The tetragonal unit cell (Fig. 3) has one molecule at the origin and another (with inverted configuration) at the body center. If the second molecule were moved to z = 0 and inverted, this structure would be identical with that of the Zr and Hf compounds, apart from a deviation of about 0.6% from cubic lattic dimensions. The boron positions are hardly changed in this transformation, but the packing of their terminal hydrogen atoms is significantly different in the two structures.

Further work is underway on the spectroscopic properties of $Np(BH_4)_4$.

ACKNOWLEDGEMENT

This work was supported by the Division of Nuclear Sciences Office of Basic Energy Sciences, U.S. Department of Energy, under contract No. W-7405-Eng-48.

Supplementary Material Available: Listing of structure factor amplitudes (3 pages). Ordering information is given on any current masthead page.

REFERENCES AND NOTES

1. On leave from the Chemistry Department, Beloit College, Beloit, Wisconsin.

2. (a) Nibler, J.W. J. Am. Chem. Soc. 1972, 94, 3349.
(b) Price, W.C. J. Chem. Phys. 1949, 17, 1044.

3. (a) Hoekstra, H.R.; Katz, J.J. J. Am. Chem. Soc. 1949, 71, 2488.
(b) Schlesinger, H.I.; Brown, H.C. J. Am. Chem. Soc. 1953, 75, 219.

4. Banks, R.H.; Edelstein, N.M.; Rietz, R.R.; Templeton, D.H.; Zalkin, A. J. Am. Chem. Soc. 1978. 100, 1957.

5. (a) James, B.D.; Wallbridge, M.G.H. Prog. Inorg. Chem. 1970, 11, 99.
(b) Marks, T.J.; Kolb, J.R. Chem. Revs. 1977, 77, 263.

6. (a) Bernstein, E.R.; Hamilton, W.C.; Keiderling, T.A.; LaPlaca, S.J.; Lippard, S.J.; Mayerle, J.J. Inorg. Chem. 1972, 11, 3009.
(b) Bernstein, E.R.; Keiderling, T.A.; Lippard, S.J.; Mayerle, J.J. J. Am. Chem. Soc. 1972, 94, 2552.

7. Recent work has shown that condensation of $U(BH_4)_4$ at -80° results in a new solid phase; Charpin, P.; Marquet-Ellis, H.; Folcher, G. 1978, private communication.

8. (a) Broach, R.S.; Chuang, I.-S.; Williams, J.M.; Marks, T.J. 1979, Private communication.
(b) Keiderling, T.A. Ph.D. Thesis, 1974, Princeton University.

9. Bird, P.H.; Churchill, M.R. Chem. Comm. 1967, 403.

10. Doyle, P.A.; Turner, P.S. Acta Cryst. 1968, A24, 390.

11. Stewart, R.F.; Davidson, E.R. Simpson, W.T. J. Chem. Phys. 1965, 42, 3175.

12. Ibers, J.A.; Hamilton, W.C. "International Tables for X-Ray Crystallography", Vol. IV; Kynoch Press: Birmingham, 1974; p.97.

13. For spectroscopic interest, they also have low solubility in $Zr(BH_4)_4$ and $Hf(BH_4)_4$.

14. Unpublished results in our laboratory.

15. Shannon, R.D.; Prewitt, C.T. Acta Cryst. 1969, B25, 925.

16. Rietz, R.R.; Zalkin, A.; Templeton, D.H.; Edelstein, N.M.; Templeton, L.K. Inorg. Chem. 1978, 17, 653.

17. Plato, V.; Hedberg, K. Inorg. Chem. 1971, 10, 590.

18. Peterson, E.R. Diss. Abstracts 1965, 25, 5588.

19. (a) James, B.D.; Smith, B.E.; Shurvell, H.F. J. Mol. Struct. 1976, 33, 91.

(b) Smith, B.E.; Shurvell, H.F.; James B.D. J. Chem. Soc. 1978, 710.

Table I. Properties of Metal Tetrakis-Tetrahydroborates.[a]

Property		$Th(BH_4)_4$ [c]	$U(BH_4)_4$ [b]	$Hf(BH_4)_4$ [b]	$Zr(BH_4)_4$ [b]	$Np(BH_4)_4$
Crystallographic space group		$P4_32_12$ [d]	$P4_32_12$ [d]	$P\bar{4}3m$ [e]	$P\bar{4}3m$ [f]	$p4_2/nmc$
Solid-state structure		polymeric	polymeric	monomeric	monomeric	monomeric
Melting point (°C)		203 [g]	126 [g]	29.0	28.7	14.2
Boiling point (°C) extrap.		-	-	118	123	153
Vapor pressure (mmHg/°C)		0.05/130	0.19/30	14.9/25	15.0/25	10.0/25
Heat of sublimation (kcal/mol)		21	19.5	13.0	13.6	14.5
Heat of vaporization (kcal/mol)		-	-	9.6	9.3	8.5
Heat of fusion (kcal/mol)		-	-	3.4	4.3	6.0
Liquid [h]	A	-	-	2097	2039	1858
	B	-	-	8.247	8.032	7.24
Solid [h]	A	-	4264.6	2844	2983	3168
	B	-	13.354	10.719	10.919	11.80
Solubility in n-pentane		insol	slight	high	high	high

[a] The Pa and Pu compounds are not included in this table as most of the values for the listed properties are unknown.

[b] Ref. 3a.

[c] J. J. Katz, E. Rabinowitch. "The Chemistry of Uranium," McGraw-Hill, 1951.

[d] Ref. 6b.

[e] Ref. 7.

[f] Ref. 8.

[g] With decomposition.

[h] $\log p(mmHg) = -A/T + B$.

Table II. Positional and Thermal Parameters.[a]

Atom	x	y	z	B_{11}	B_{22}	B_{33}	B_{23}
Np	0	0	0	1.94(5)	1.94(5)	2.07(6)	0
B	0	0.235(4)	0.233(5)	2.8(11)	3.0(12)	2.4(7)	-1.6(8)
H(1)[b]	0	0.33(3)	0.33(4)				
H(2)[b]	0	0.26(6)	0.05(4)				
H(3)[b]	0.10(3)	0.15(2)	0.24(6)				

[a]The anisotropic temperature factor has the form $\exp(-0.25(B_{11}h^2a^{*2} + 2B_{12}hka^*b^* + \ldots))$. Symmetry restraints of the thermal parameters of Np are: $B_{11} = B_{22}$ and $B_{12} = B_{13} = B_{23} = 0$; and for B they are $B_{12} = B_{13} = 0$.

[b]The isotropic thermal parameter of the hydrogen atoms was constrained to a value of 3.0 $Å^2$ and its isotropic temperature factor has the form $\exp(-B((\sin\theta)/\lambda^2))$.

Table III. Interatomic Distances (Å).

Np-4B	2.46(3)	H(1)-H(2)	1.8(5)
Np-H(2)	2.3(5)	H(1)-2H(3)	1.9(3)
Np-2H(3)	2.1(3)	H(2)-2H(3)	1.8(3)
B-H(1)	1.0(3)	H(3)-H(3)	1.8(4)
B-H(2)	1.1(2)	H(2)-2H(3)[a]	2.5(4)
B-2H(3)	1.2(2)	H(3)-H(3)[a]	2.5(4)

[a]Distance to H(3) on an adjacent BH_4^- group.

Table IV. Angles (deg).

B-Np-B[a]	110.3(18)	Np-B-H(1)	179(16)
B-Np-B[b]	109.1(9)	Np-H(2)-B	85(26)
H(1)-B-H(2)	112(32)	Np-H(3)-B	93(16)
H(1)-B-H(3)	122(15)		
H(2)-B-H(3)	99(20)		
H(3)-B-H(3)	100(22)		

[a]Symmetry operation $0,\bar{x},z$.

[b]Symmetry operations $x,0,\bar{z}$ and $\bar{x},0,\bar{z}$.

FIGURE CAPTIONS

Fig. 1. Vapor pressure versus $10^3/T$ for $Np(BH_4)_4$.

Fig. 2. ORTEP stereo view of $Np(BH_4)_4$.

Fig. 3. Schematic diagram of packing in $Np(BH_4)_4$. Solid line is the tetragonal $Np(BH_4)_4$ cell, the dotted line shows the cubic $Zr(BH_4)_4$ cell if the metal atoms were at $z = 0$. The H atoms are not shown.

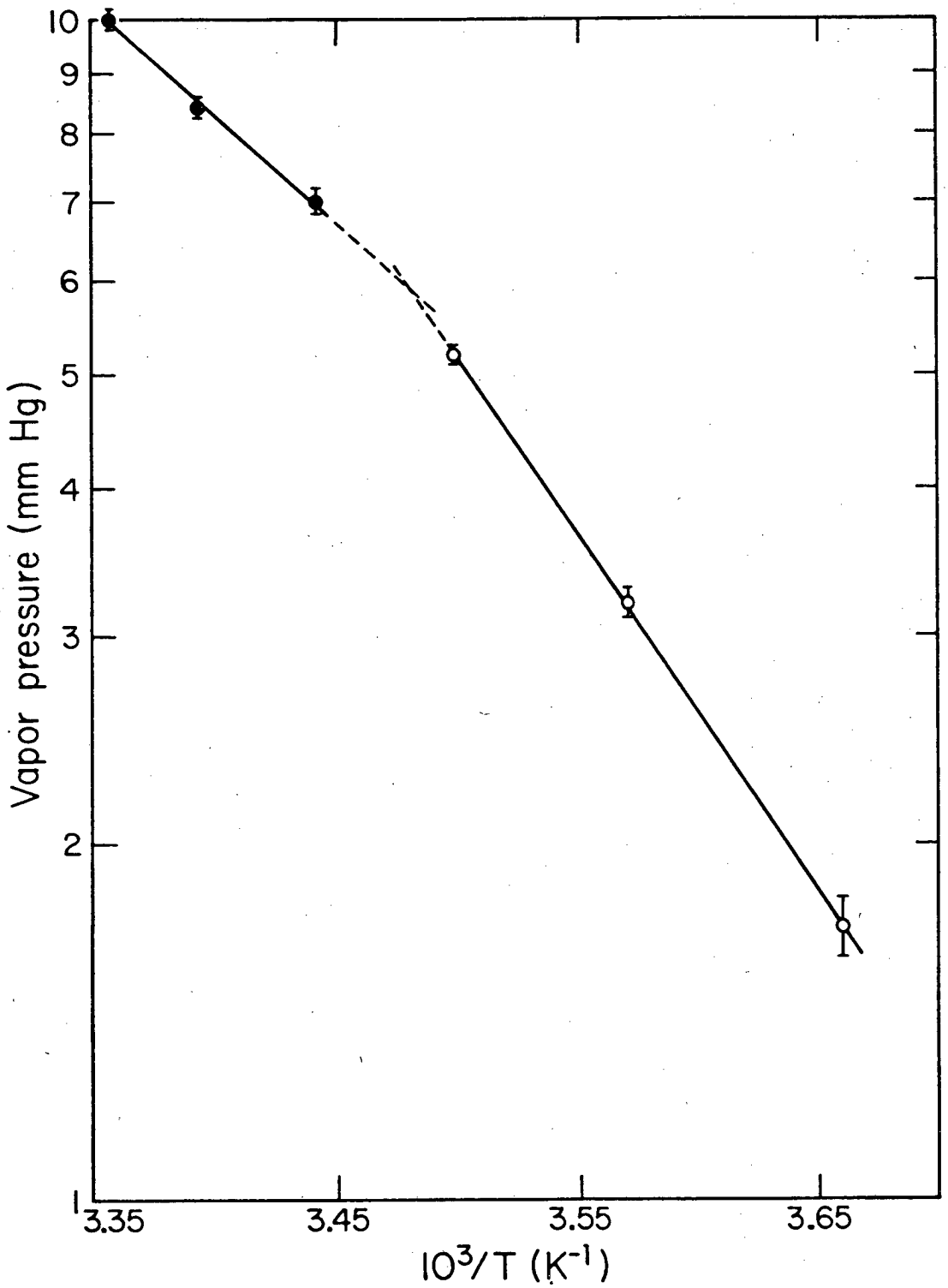

XBL 796-1725

Fig. 1

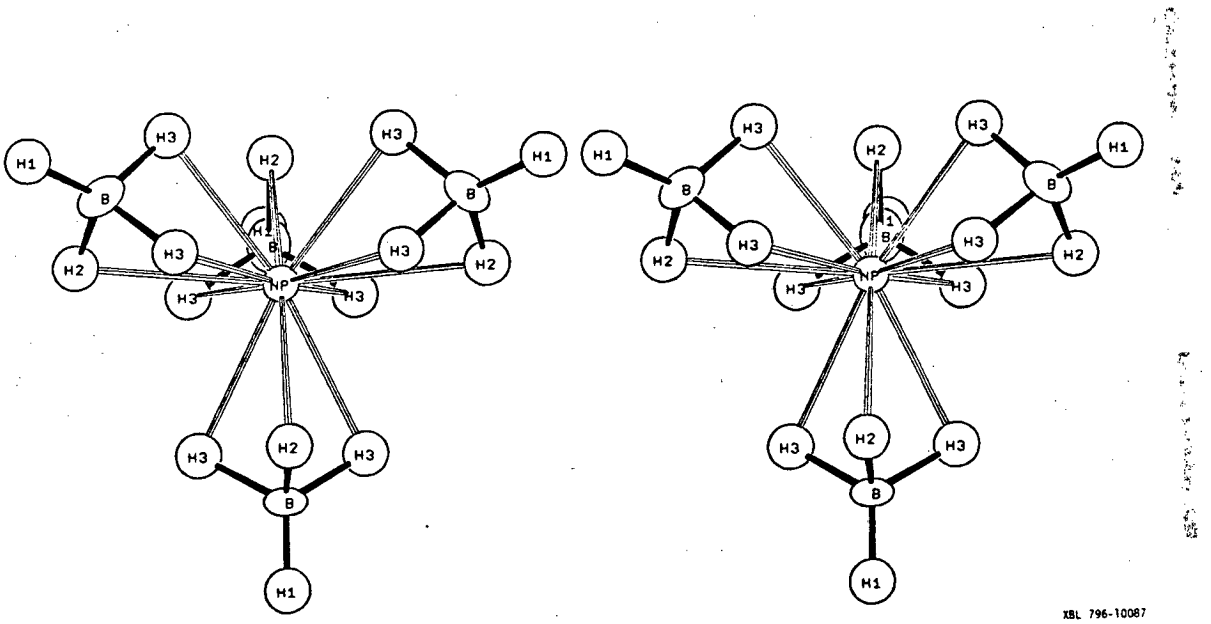

Fig. 2

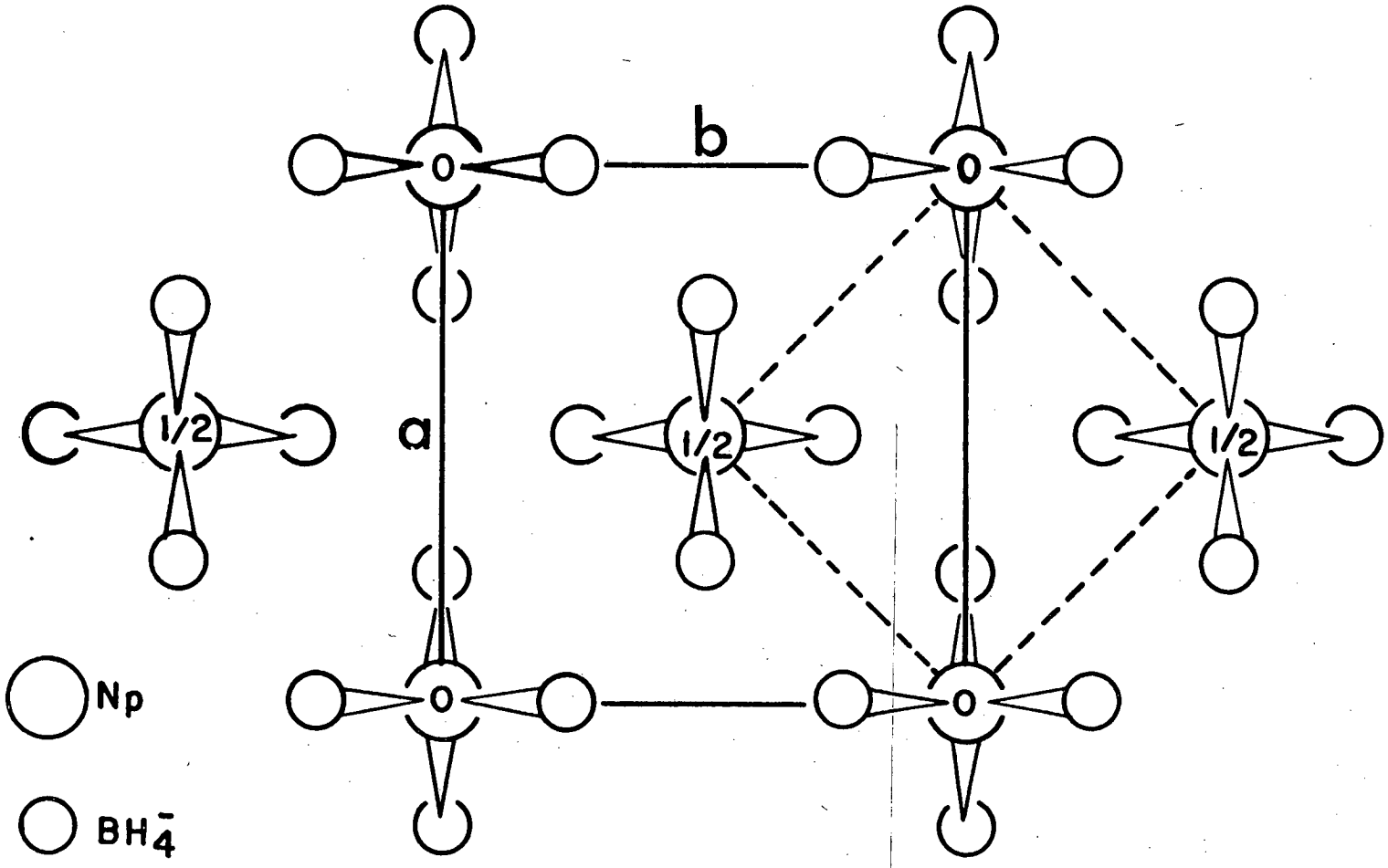

XBL 796-10085

Fig. 3

Supplementary Materials for the paper:

VOLATILITY AND MOLECULAR STRUCTURE OF NEPTUNIUM (IV) BOROHYDRIDE

by Rodney H. Banks, Norman M. Edelstein, Brock Spencer, David H. Templeton and Allan Zalkin

Table of observed structure factors for $Np(BH_4)_4$.

OBSERVED STRUCTURE FACTORS, STANDARD DEVIATIONS, AND DIFFERENCES (ALL X 8.0)
NP(BH4)4 F(0,0,0) = 1823

FOB AND FCA ARE THE OBSERVED AND CALCULATED STRUCTURE FACTORS.
SG = ESTIMATED STANDARD DEVIATION OF FOB. DEL = /FOB/ - /FCA/.
* INDICATES ZERO WEIGHTED DATA.

L	FOB	SG	DEL
H,K=	0,	0	
2	891	46	85
4	898	47	79
6	461	24	75
8	305	16	49
H,K=	1,	0	
1	983	183	-221
2	8	25	-2*
3	843	57	-11
4	7	25	2*
5	571	35	-3
6	23	16	5
7	307	25	1
8	7	30	-4*
9	172	13	-3
H,K=	1,	1	
0	1228	63	-10
2	906	47	-68
4	755	39	41
6	475	25	63
8	277	14	39
H,K=	2,	0	
0	1061	66	-97
1	299	27	31
2	924	61	-52
3	102	5	1
4	716	40	41
5	65	7	4
6	474	26	60
7	31	8	5
8	270	18	41
9	5	26	-6*
H,K=	2,	1	
1	931	87	-125
2	26	11	2
3	710	42	-109
4	18	21	5*
5	480	28	-32
6	25	29	8*
7	275	14	-47
8	0	32	-10*
9	150	8	-3
H,K=	2,	2	
0	842	43	27
2	1017	52	-16
4	598	31	30
6	461	24	27
8	236	12	32
H,K=	3,	0	
1	892	152	-121
2	26	6	7
3	684	69	-95
4	17	20	4*
5	482	47	-34
6	11	24	-3*
7	283	33	-0
8	23	60	13*
9	158	18	-4
H,K=	3,	1	
0	1025	66	41
1	27	15	6
2	968	87	49
3	27	10	-0
4	629	33	21
5	31	8	13
6	436	22	40
7	29	12	17
8	245	13	34
9	20	27	14*
H,K=	3,	2	
1	832	63	-84
2	20	11	13
3	650	52	-91
4	20	24	14*
5	430	30	-38
6	16	22	0*
7	242	13	-54
8	17	28	8*
9	136	8	-7
H,K=	3,	3	
0	1003	52	98
2	866	45	70
4	591	31	43
6	396	20	23
8	223	12	34
H,K=	4,	0	
0	1027	69	-8
1	23	4	3
2	816	98	64
3	15	19	11*
4	655	39	23
5	20	20	19*
6	375	21	48
7	0	26	-1*
8	246	13	29
9	20	27	18*
H,K=	4,	1	
1	814	102	-81
2	26	8	9
3	618	74	-59
4	23	26	10*
5	419	33	-57
6	16	26	0*
7	230	12	-31
8	37	11	26
9	132	9	-19
H,K=	4,	2	
0	922	49	72
1	108	6	6
2	839	62	69
3	67	4	6
4	593	37	41
5	46	4	1
6	379	19	28
7	29	10	9
8	217	11	22
H,K=	4,	3	
1	701	40	-91
2	14	19	-3*
3	541	31	-69
4	4	31	-10*
5	351	19	-89
6	15	25	2*
7	209	11	-30
8	25	26	16*
H,K=	4,	4	
0	921	47	89
2	647	33	71
4	571	30	35
6	318	17	37
8	202	11	15
H,K=	5,	0	
1	723	107	-59
2	0	20	-6*
3	588	98	-30
4	14	31	8*
5	386	52	-46
6	7	22	-5*
7	234	29	-10
8	23	26	16*
H,K=	5,	1	
0	865	60	74
1	30	8	7
2	750	67	62
3	24	18	4
4	572	42	39
5	30	9	18
6	347	18	33
7	26	19	17
8	216	11	21
H,K=	5,	2	
1	683	73	-41
2	0	19	-9*
3	554	64	-44
4	21	24	12*
5	324	19	-68
6	0	25	-11*
7	206	11	-48
8	32	14	24
H,K=	5,	3	
0	812	46	86
1	30	17	18
2	682	41	65
3	28	35	6*
4	523	27	42
5	23	23	3*
6	329	17	31
7	9	26	-6*
8	196	10	21
H,K=	5,	4	
1	566	32	-70
2	20	21	7*
3	451	25	-51
4	9	22	-3*
5	297	15	-73
6	0	24	-13*
7	181	10	-26
8	30	39	22*
H,K=	5,	5	
0	691	36	90
2	560	29	66
4	462	24	41
6	278	14	36
8	170	10	9
H,K=	6,	0	
0	745	62	39
1	60	7	-1
2	672	75	65
3	50	14	6
4	530	44	65
5	32	9	-1
6	331	17	36
7	24	30	9*
8	201	11	30
H,K=	6,	1	
1	599	82	-51
2	5	21	-9*
3	509	73	-42
4	26	17	12
5	306	26	-51
6	20	27	7*
7	197	10	-41
8	0	27	-9*
H,K=	6,	2	
0	662	47	82
1	0	20	-12*
2	715	68	75
3	8	27	3*
4	452	28	52
5	13	23	10*
6	328	17	20
7	26	27	24*
8	177	10	23
H,K=	6,	3	
1	532	36	-57
2	15	31	3*
3	449	33	-56
4	7	30	-7*
5	276	18	-54
6	0	25	-14*
7	174	15	-45
8	19	28	10*
H,K=	6,	4	
0	638	33	70
1	60	14	0
2	569	33	61
3	36	10	-8
4	429	24	38
5	29	13	-1
6	278	14	25
7	32	28	19
8	164	9	18
H,K=	6,	5	
1	449	23	-39
2	0	20	-9*
3	347	18	-76
4	23	24	12*
5	235	12	-45
6	22	33	12*
7	149	9	-48
H,K=	6,	6	
0	476	25	70
2	495	26	49
4	326	17	37
6	235	12	11
H,K=	7,	0	
1	546	78	-32
2	23	35	21*
3	454	74	-8
4	0	23	-5*
5	319	49	-21
6	37	9	28
7	188	24	-6
8	27	20	20
H,K=	7,	1	
0	631	54	67
1	24	24	8*
2	607	55	70
3	31	11	13
4	445	33	60

STRUCTURE FACTORS CONTINUED FOR
NP(BH4)4

L	FOB	SG	DEL
5	28	30	13*
6	303	16	34
7	26	27	14*
8	170	9	29
H,K=	7,	2	
1	515	68	-26
2	0	20	-9*
3	390	33	-65
4	0	33	-9*
5	265	16	-44
6	34	19	24
7	166	10	-36
H,K=	7,	3	
0	566	34	63
1	14	22	1*
2	561	38	57
3	22	18	12
4	398	23	55
5	11	24	4*
6	282	15	26
7	22	26	16*
H,K=	7,	4	
1	432	28	-49
2	24	25	18*
3	334	17	-54
4	0	22	-8*
5	238	12	-52
6	28	29	19*
7	147	9	-19
H,K=	7,	5	
0	499	26	67
1	10	23	-16*
2	466	25	57
3	15	40	-10*
4	347	18	40
5	16	28	-3*
6	239	13	30
7	33	15	18
H,K=	7,	6	
1	322	17	-58
2	14	22	7*
3	269	14	-60
4	0	24	-8*
5	186	10	-38
6	16	29	8*
H,K=	7,	7	
0	381	20	60
2	383	20	48
4	268	14	41
6	200	11	22
H,K=	8,	0	
0	595	47	49
1	30	11	19
2	469	40	64
3	23	30	15*
4	416	38	42

L	FOB	SG	DEL
5	9	25	4*
6	244	13	34
7	18	26	14*
H,K=	8,	1	
1	455	65	-26
2	30	8	21
3	340	40	-45
4	10	29	-2*
5	245	23	-48
6	0	26	-12*
7	156	8	-7
H,K=	8,	2	
0	533	47	73
1	31	19	-14
2	489	39	53
3	18	38	-14*
4	372	28	48
5	31	17	10
6	246	13	24
7	24	26	15*
H,K=	8,	3	
1	368	33	-71
2	19	25	10*
3	304	27	-52
4	24	16	14
5	221	12	-50
6	18	26	7*
7	127	8	-24
H,K=	8,	4	
0	504	28	56
1	10	22	5*
2	403	25	54
3	17	22	13*
4	349	23	35
5	8	28	5*
6	213	11	30
7	9	27	7*
H,K=	8,	5	
1	314	17	-57
2	13	24	6*
3	256	13	-46
4	21	25	12*
5	188	18	-43
6	23	35	14*
H,K=	8,	6	
0	388	20	54
1	23	31	-1*
2	352	18	42
3	38	9	19
4	270	14	31
5	0	26	-12*
6	185	18	22
H,K=	8,	7	
1	244	13	-47
2	0	24	-4*
3	206	11	-32

L	FOB	SG	DEL
4	0	25	-6*
5	152	9	-33
H,K=	8,	8	
1	312	16	39
2	258	14	39
4	227	13	31
H,K=	9,	0	
1	373	71	-27
2	37	8	30
3	317	64	-14
4	13	24	7*
5	233	45	-14
6	32	13	26
7	146	22	3
H,K=	9,	1	
0	476	34	54
1	21	26	8*
2	404	31	52
3	25	14	14
4	344	27	42
5	16	32	6*
6	214	11	35
7	25	26	17*
H,K=	9,	2	
1	321	36	-58
2	12	23	9*
3	276	30	-52
4	0	30	-6*
5	197	20	-28
6	17	28	10*
H,K=	9,	3	
0	434	26	54
1	0	33	-21*
2	375	26	43
3	17	31	-2*
4	310	21	38
5	23	28	8*
6	194	10	22
H,K=	9,	4	
1	288	15	-52
2	30	10	24
3	247	18	-35
4	0	35	-6*
5	177	10	-35
6	27	21	22
H,K=	9,	5	
0	380	21	46
1	17	25	12*
2	311	18	40
3	0	25	-5*
4	268	14	24
5	18	36	14*
6	160	9	20
H,K=	9,	6	
1	232	13	-43
2	0	24	-3*

L	FOB	SG	DEL
3	195	11	-45
4	0	26	-5*
5	148	8	-16
H,K=	9,	7	
0	293	15	41
1	0	26	-15*
2	266	14	38
3	0	26	-15*
4	213	11	30
5	7	27	-5*
H,K=	9,	8	
1	181	10	-32
2	30	17	27
3	149	9	-28
4	21	33	16*
H,K=	9,	9	
0	217	12	21
2	189	10	30
H,K=	10,	0	
0	379	29	35
1	7	23	-23*
2	351	31	51
3	10	32	-12*
4	276	25	30
5	0	29	-13*
6	186	15	29
H,K=	10,	1	
1	275	32	-46
2	0	23	-6*
3	242	32	-40
4	19	25	10*
5	167	21	-23
6	22	29	13*
H,K=	10,	2	
0	343	24	49
1	23	25	15*
2	350	25	31
3	24	28	18*
4	253	16	38
5	2	27	-4*
6	187	10	23
H,K=	10,	3	
1	252	14	-46
2	0	24	-5*
3	217	19	-44
4	16	25	8*
5	150	9	-26
6	16	38	8*
H,K=	10,	4	
0	323	17	32
1	0	32	-20*
2	298	19	40
3	18	43	3*
4	236	12	25
5	32	14	23
H,K=	10,	5	

L	FOB	SG	DEL
1	213	11	-41
2	22	24	18*
3	186	10	-37
4	19	26	14*
5	132	9	-20
H,K=	10,	6	
0	252	13	32
1	17	25	15*
2	256	13	26
3	8	27	5*
4	186	10	23
H,K=	10,	7	
1	172	10	-31
2	29	15	25
3	145	9	-33
4	14	34	9*
H,K=	10,	8	
0	209	11	27
1	15	29	5*
2	195	10	29
H,K=	11,	0	
1	250	45	-18
2	28	31	26*
3	214	44	-10
4	0	26	-5*
5	163	27	-5
H,K=	11,	1	
0	296	21	35
1	17	24	5*
2	294	16	35
3	42	8	30
4	211	16	24
5	0	28	-10*
H,K=	11,	2	
1	222	21	-33
2	33	11	30
3	184	11	-38
4	20	30	17*
5	141	8	-13
H,K=	11,	3	
0	271	14	33
1	0	32	-6*
2	274	14	31
3	0	26	-6*
4	195	10	25
5	0	29	-5*
H,K=	11,	4	
1	199	11	-32
2	8	29	6*
3	165	17	-27
4	21	26	17*
H,K=	11,	5	
0	239	13	28
1	0	42	-12*
2	225	12	24
3	31	36	20*

STRUCTURE FACTORS CONTINUED FOR
NP(BH4)4

L	FOB	SG	DEL	L	FOB	SG	DEL	L	FOB	SG	DEL	L	FOB	SG	DEL	L	FOB	SG	DEL
4	174	9	21																
H,K=		11,	6																
1	155	10	-33																
2	0	31	-2*																
3	139	10	-26																
H,K=		11,	7																
0	193	11	32																
1	0	32	-2*																
2	195	11	26																
H,K=		12,	0																
0	254	23	20																
1	21	25	14*																
2	215	19	26																
3	17	26	11*																
4	192	11	24																
H,K=		12,	1																
1	180	11	-33																
2	23	25	19*																
3	155	9	-21																
4	14	26	8*																
H,K=		12,	2																
0	238	18	34																
1	27	17	13																
2	223	19	23																
3	21	30	11*																
4	173	9	25																
H,K=		12,	3																
1	167	10	-31																
2	20	25	17*																
3	142	10	-22																
H,K=		12,	4																
0	219	12	20																
1	3	26	-1*																
2	194	10	30																
3	0	27	-4*																
H,K=		12,	5																
1	144	11	-27																
2	6	26	3*																
H,K=		12,	6																
0	177	9	24																
1	23	30	15*																
H,K=		13,	0																
1	154	31	-16																
2	33	12	32																
H,K=		13,	1																
0	204	11	26																
1	19	25	13*																
2	172	9	21																
H,K=		13,	2																
1	144	17	-18																
2	23	25	21*																
H,K=		13,	3																
0	186	10	23																
1	25	28	18*																

This report was done with support from the Department of Energy. Any conclusions or opinions expressed in this report represent solely those of the author(s) and not necessarily those of The Regents of the University of California, the Lawrence Berkeley Laboratory or the Department of Energy.

Reference to a company or product name does not imply approval or recommendation of the product by the University of California or the U.S. Department of Energy to the exclusion of others that may be suitable.

TECHNICAL INFORMATION DEPARTMENT
LAWRENCE BERKELEY LABORATORY
UNIVERSITY OF CALIFORNIA
BERKELEY, CALIFORNIA 94720