DK. 2919

LBL-9248
GREMP-7
UC-66a

Evaluation of Potential Geothermal Well-head Flow Sampling and Calorimeter Methods

MASTER

W. C. Cliff, W. J. Apley and J. M. Creer
Pacific Northwest Laboratory

JUNE 1979

Geothermal Reservoir Engineering Management Program

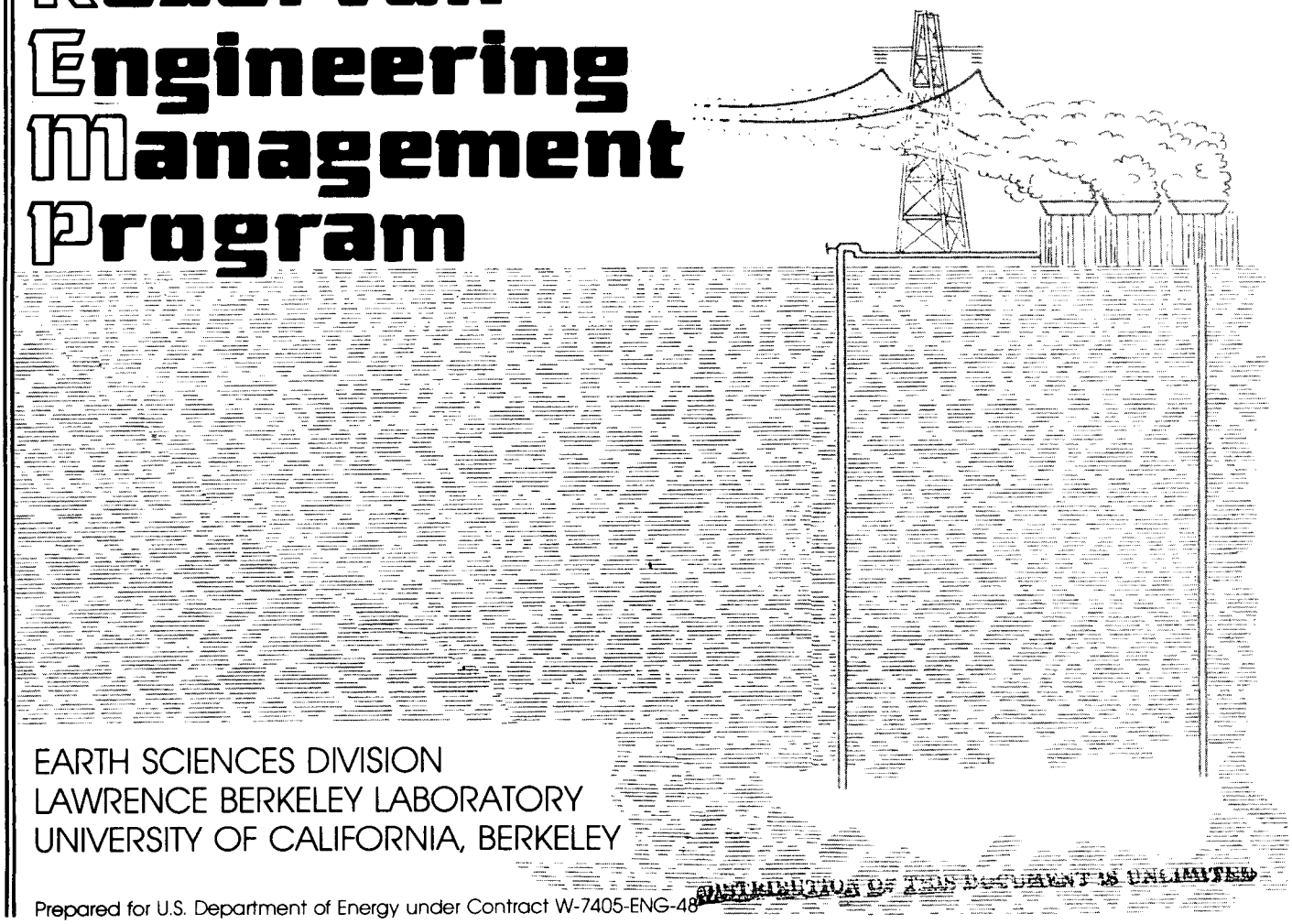

EARTH SCIENCES DIVISION
LAWRENCE BERKELEY LABORATORY
UNIVERSITY OF CALIFORNIA, BERKELEY

DISTRIBUTION OF THIS DOCUMENT IS UNLIMITED

Prepared for U.S. Department of Energy under Contract W-7405-ENG-48

DISCLAIMER

This report was prepared as an account of work sponsored by an agency of the United States Government. Neither the United States Government nor any agency Thereof, nor any of their employees, makes any warranty, express or implied, or assumes any legal liability or responsibility for the accuracy, completeness, or usefulness of any information, apparatus, product, or process disclosed, or represents that its use would not infringe privately owned rights. Reference herein to any specific commercial product, process, or service by trade name, trademark, manufacturer, or otherwise does not necessarily constitute or imply its endorsement, recommendation, or favoring by the United States Government or any agency thereof. The views and opinions of authors expressed herein do not necessarily state or reflect those of the United States Government or any agency thereof.

DISCLAIMER

Portions of this document may be illegible in electronic image products. Images are produced from the best available original document.

LEGAL NOTICE

This report was prepared as an account of work sponsored by the United States Government. Neither the United States nor the United States Department of Energy, nor any of their employees, nor any of their contractors, subcontractors, or their employees, makes any warranty, express or implied, or assumes any legal liability or responsibility for the accuracy, completeness or usefulness of any information, apparatus, product or process disclosed, or represents that its use would not infringe privately owned rights.

Printed in the United States of America
Available from
National Technical Information Service
U.S. Department of Commerce
5285 Port Royal Road
Springfield, VA 22161
Price Code: A03

EVALUATION OF POTENTIAL GEOTHERMAL WELL-HEAD FLOW SAMPLING AND CALORIMETER METHODS

Prepared by

W. C. Cliff, W. J. Apley, and J. M. Creer
Pacific Northwest Laboratory
Richland, Washington 99352

Prepared for

Earth Sciences Division
University of California
Lawrence Berkeley Laboratory
Berkeley, California 94720

NOTICE

This report was prepared as an account of work sponsored by the United States Government. Neither the United States nor the United States Department of Energy, nor any of their employees, nor any of their contractors, subcontractors, or their employees, makes any warranty, express or implied, or assumes any legal liability or responsibility for the accuracy, completeness or usefulness of any information, apparatus, product or process disclosed, or represents that its use would not infringe privately owned rights.

This work was supported by the Division of Geothermal Energy of the U. S. Department of Energy.

DISTRIBUTION OF THIS DOCUMENT IS UNLIMITED

EVALUATION OF POTENTIAL GEOTHERMAL WELL-HEAD FLOW SAMPLING AND CALORIMETER METHODS

W. C. Cliff, W. J. Apley, and J. M. Creer
Pacific Northwest Laboratory
Richland, Washington 99352

ACKNOWLEDGMENTS

The authors wish to express their gratitude to the program's technical monitors, J. H. Howard, W. J. Schwarz and C. W. Miller of the Lawrence Berkeley Laboratory (LBL), for their advice, consideration, and review of this study. Special thanks is also extended to the Earth Sciences Division of LBL, who supported this effort through Purchase Order 3976802.

EXECUTIVE SUMMARY

The objective of this study was to evaluate, select, and conceptually design calorimeter systems that could potentially permit economical, reliable and accurate measurements of the enthalpy of multiphase fluids at geothermal well heads. This study identified seven candidate calorimeter methods to obtain well-head enthalpy measurements:

- regenerative heat exchanger
- single-pass heat exchanger
- mixing tee condenser
- pressurizer spray condenser
- multiphase tank
- liquidizer
- quick-closing valves.

Based on the analyses performed during this study, the mixing tee condenser and single-pass heat exchanger calorimeters are recommended for future development for measuring well-head enthalpies. This recommendation is based primarily on the good accuracy, high reliability, low cost, and overall applicability of the two calorimeter methods. Because mixing tee and single-pass heat exchangers require cooling water, the multiphase tank method is recommended for additional development for potential use at well heads with no available cooling water.

In the conduct of this study, it was determined that a sampling system was required to withdraw a "representative" sample from the geothermal flow. A relatively low sample flow rate was required to permit compact, portable, calorimeter systems to be considered. Consequently, five candidate isokinetic sampling probe configurations were identified and evaluated during this study. These probe configurations were:

- Nonlinear-spaced, retractable, multiple equal-area ports (REAP probe)
- Linear-spaced, retractable, multiple variable-area ports
- Single-port, retractable, traversable
- Fixed, multiple-port, nonretractable
- Single-port, fixed, nonretractable

Based on the evaluation performed during this study, further development of the REAP probe with removal hardware is recommended. This sampling scheme allows simultaneous fluid extraction across the pipe diameter, or if appropriate, single-point sampling. Mixing flow streams from multiple sampling ports yields a single representative sample, but only requires the extraction of a small percentage (~0.5 to 4%) of the total flow. The nonlinear spacing of the ports results in more sample collection points near the pipe wall where velocity and quality gradients are largest, thereby providing improved accuracy. The probe's retractability allows longer hardware lifetimes, and therefore, lower costs. Once the necessary well-head modification has been performed, the sample probe may be removed, cleaned, and reinstalled without any interruption of well operation.

It should be noted that the combination of the recommended sampling probe and calorimeter systems can potentially provide an estimate of the total mass flow rate from the geothermal well. The accuracy of the sampler/calorimeter to estimate the total mass flow rate from the geothermal well should be determined during the field testing of the sampler/calorimeter system.

It is recommended that the mixing tee and single-pass heat exchanger calorimeters and the REAP sampling probe be designed, fabricated, and tested at a geothermal well head such as the East Mesa Test Facility owned by the DOE.

NOMENCLATURE

Symbol	Quantity	Units
C_p	Specific heat	Btu/lbm-°R
D	Diameter	inch, ft
g_c	Gravitational constant	$32.174 \frac{\text{lbm - ft}}{\text{lb}_f\text{ - sec}^2}$
h	Enthalpy	Btu/lbm
J	Conversion factor (1 Btu = 778.26 ft - lb_f)	$778.26 \frac{\text{ft - lb}_f}{\text{Btu}}$
m	Mass	lbm
$\dot{m}$	Mass flow rate	lbm/sec; lbm/min
P	Pressure	lb_f/ft^2
Q_L	Heat loss	Btu
q_L	Heat loss per unit mass	Btu/lbm
R	Radius	inch, ft
U	Internal energy	Btu
u	Internal energy per unit mass	Btu/lb_m
V	Volume	ft^3
$\bar{V}$	Average velocity	ft/sec; ft/min
W	Uncertainty	Btu/lbm
Z	Elevation	ft
ρ	Density	lbm/ft^3

v	Specific volume	ft^3/lbm
X	Quality	---

Subscripts

f	fluid
fg	difference in value between gas and fluid
g	gas
i	into system
is	initial system
fs	final system
σ	system
1,2,3,4	measurement points 1,2,3,4 in calorimeter systems
e	exit conditions

CONVERSION TABLES (U.S. to Metric)

To Convert	Multiply by	To Obtain
Btu	7.7826×10^2	ft - lb_f
Btu	2.52×10^2	gram-calories
Btu	1.055×10^3	joules
Btu/min	2.356×10^{-2}	horsepower
Btu/min	1.757×10^{-2}	kilowatts
cubic feet	2.832×10^4	cu. cms.
cubic feet	2.832×10^{-2}	cu. meters
cubic feet	7.481	gallons
feet	3.048×10^{-1}	meters
gallons	1.337×10^{-1}	cubic feet
gallons	3.785×10^{-3}	cubic meters
gallons/min	6.308×10^{-2}	liters/s
inches	2.540	centimeters
inches	2.540×10^{-2}	meters
lb_f	4.448	Newtons
lb_m	4.536×10^2	grams
lb_f/sq. ft	4.882	kgs./sq. meter
lb_f/sq. in.	7.031×10^2	kgs./sq. meter
sq. ft	9.29×10^{-2}	sq. meters
sq. inches	6.452	sq. cms
temperature(^oC) +273.15	1.0	absolute temperature(^oK)
temperature(^oC) +17.78	1.8	temperature(^oF)
temperature(^oF) +459.67	1.0	absolute temperature(^oR)
temperature(^oF) -32	5/9	temperature(^oC)

1.0 INTRODUCTION

In the search for alternate energy sources, the exploitation of geothermal energy has gained increasing importance. The main objective of current geothermal development is to convert geothermal energy into usable energy for the private and commercial sectors of society at a cost that is economically competitive with other conventional sources of energy. To minimize the production cost of energy generated by a geothermal well, the power cycles and equipment must be optimized for the particular geothermal resource at which the equipment is installed. This requires that the specific thermal hydraulic characteristics such as enthalpy and mass flow rate of geothermal wells be accurately determined before valid engineering optimization can be accomplished. These characteristics are required to determine well power potentials and are needed to monitor the performance of operating wells which supply working fluid to geothermal power plants.

A few calorimeter designs have been used to measure the enthalpy at geothermal well heads.[1-6] The measurement of enthalpy values from single-phase liquid wells or superheated single-phase steam wells may be performed without great difficulty. For single-phase liquid wells, a measure of the liquid temperature is required and superheated single-phase steam enthalpies can be measured using a standard throttling calorimeter. However, geothermal wells that have multiphase flows do not presently have a simple, economical, reliable, and accurate method to measure the enthalpy.

The principal objective of this study was to evaluate, conceptually design, compare, and recommend calorimeter system(s) for future testing that will permit economical, reliable, and accurate measurements of enthalpy values at geothermal well heads. A secondary objective of this study was to evaluate, select, conceptually design, compare, and recommend techniques which will withdraw a "representative" sample from the geothermal flow and may be used in conjunction with the recommended calorimeter designs. Although this secondary objective was not originally an objective of this study, it was determined early in the project that a relatively small but representative sample flow rate was essential to permit compact, portable calorimeter systems to be considered.

The purpose of this report is to present the results of the evaluation of potential geothermal well-head calorimeter systems and flow sampling techniques. The candidate calorimeter systems and flow sampling configurations are presented and discussed. The systems and configurations are compared and ranked relative to their potential usefulness for obtaining enthalpy measurements and representative sample flows at geothermal well heads. A preliminary test plan is presented to briefly indicate the type of field tests that are recommended for further development of selected candidate calorimeter methods and sample flow withdrawal apparatus.

2.0 CONCLUSIONS AND RECOMMENDATIONS

The following conclusions and recommendations are based on the evaluations and analyses performed during this study.

2.1 Conclusions

- The seven candidate calorimeter methods considered in this study were ranked as follows according to overall usefulness in measuring geothermal well-head enthalpies:
  - 1/2) - Mixing tee condenser
  - 1/2) - Single-pass heat exchanger
  - 3) - Multiphase tank
  - 4/5/6) - Pressurizer spray condenser
  - 4/5/6) - Regenerative heat exchanger
  - 4/5/6) - Quick-closing valves
  - 7) - Liquidizer
- For geothermal well heads where no process cooling water is available, the multiphase tank is considered the most applicable calorimeter method.

- The five candidate isokinetic sampling probe configurations considered during this study were ranked as follows based on applicability in obtaining a "representative" sample from a geothermal well-head flow:
  1) - Nonlinear-spaced, retractable, multiple equal-area ports (REAP probe)
  2) - Linear spaced, retractable, multiple variable-area ports
  3) - Single-port, retractable, traversable
  4) - Fixed multiple-port, nonretractable
  5) - Single-port, fixed, nonretractable

- All sampling must be performed using isokinetic sampling techniques to obtain a "representative" sample in geothermal multiphase flows.

- A system consisting of a calorimeter, such as the single-pass heat exchanger or the mixing tee condenser, and a "representative" sampling system, such as the REAP sampling probe, may potentially be used to simultaneously estimate the total mass flow rate of the geothermal well and determine the enthalpy of the geothermal fluid.

2.2 Recommendations

- It is recommended that the mixing tee and single-pass heat exchanger calorimeter be further developed for future use at geothermal well heads. This development will include design, fabrication, and testing at a geothermal well head.

- It is recommended that the REAP sampling probe and associated well-head hardware be developed for potential use at geothermal wells. This development will include design, fabrication, and testing at a geothermal well head.

- It is recommended that a system composed of the recommended sampling probe and calorimeters be field tested and evaluated to determine its potential use for measuring total mass flow rates of geothermal wells.

3.0 CANDIDATE CALORIMETER METHODS

The purpose of this section is to describe, evaluate, and compare candidate calorimeter methods identified for measuring the enthalpy of multiphase geothermal fluids at well heads. The following seven candidate calorimeter methods were considered:

1) regenerative heat exchanger,
2) single-pass heat exchanger,
3) mixing tee condenser,
4) pressurizer spray condenser,
5) multiphase tank,
6) liquidizer, and
7) quick-closing valves.

Based on the results of the evaluation and comparison of the candidate calorimeter methods, it is recommended that the mixing tee condenser and single-pass heat exchanger be considered for future research, which should include design, fabrication, and testing at an actual geothermal well head.

3.1 Discussion of Candidate Calorimeter Methods

The function of each of the following candidate calorimeter methods is to measure the geothermal well-head enthalpies either by having a "representative" sample flow through or into the calorimeter system or by sampling the total flow. A representative sample quantity is estimated to be in the range of 0.5% to 4% of the total well-head flow rate based upon the sampling schemes presented in Section 4.0, Geothermal Fluid Sampling Techniques. A sample flow rate of 30 lbm/min was assumed to select the size of the candidate calorimeter systems. This value was based on the 0.5% to 4% sampling range and on the total well-head flow rates presented in Table 1. In all cases it is assumed that the sample flow becomes stationary (i.e., all moments are invarient with time) when the mass flow rate into the calorimeter equals the mass flow rate out.

3.1.1 Regenerative Heat Exchanger. The regenerative heat exchanger calorimeter employs two heat exchangers to determine the enthalpy of a geothermal fluid, as shown schematically in

TABLE 1. Typical Well-Head Conditions for Low Quality Geothermal Fluids

Well	Flow Rate (lbm/min) Liquid	Gas	Total	Quality (%)	Enthalpy (Btu/lbm)	Temp (°F)	Pressure (Psia)
Mesa 8-1[7]	2832	236	3068	7.8	312	260	35[a]
Wairakei[4] 4/1	5550	533	6083	8.7	434	388[a]	215
Wairakei[4] 27	7033	1450	8483	17.1	505	388[a]	215
Wairakei[4] 38	583	400	983	40.7	700	388[a]	215
Wairakei[4] 40	5400	1667	7067	23.6	560	388[a]	215
Wairakei[4] 14	178	490	668	73.4	950	324[a]	95
Wairakei[4] 4/2	4300	1633	5933	27.5	540	324[a]	95
Mesa 8-1[7]	736	23	759	3.0	314	315	83[a]

(a) Taken from steam tables for saturated conditions, Reference 8.

Figure 1. The geothermal fluid enters the regenerative heat exchanger at Point 1 and is cooled until single-phase flow conditions exist at Point 2. The geothermal fluid subcools further as it passes through a cool-down heat exchanger in which the cooling medium is process water. The subcooled geothermal liquid then exits the cool-down heat exchanger and re-enters the regenerative heat exchanger at Point 3, thereby becoming the cooling fluid for the first pass of the regenerative heat exchanger. The geothermal fluid then exits the calorimeter at Point 4 as a subcooled liquid although with a higher temperature than it had at Point 3.

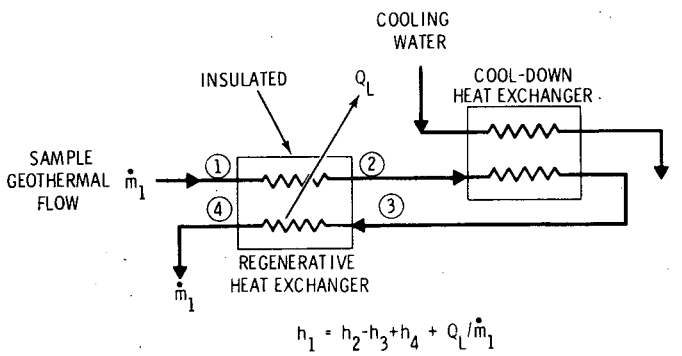

FIGURE 1. Regenerative Heat Exchanger

Performing an energy balance across the regenerative heat exchanger, while assuming that differences in kinetic and potential energies of fluids entering and leaving the system are negligible, results in the following equation for the enthalpy (h_1) of the geothermal sample fluid:

$$-Q_L + \dot{m}_1 h_1 + \dot{m}_3 h_3 = \dot{m}_2 h_2 + \dot{m}_4 h_4 \qquad (3.1)$$

Since $\dot{m}_1 = \dot{m}_2 = \dot{m}_3 = \dot{m}_4$,

$$h_1 = h_2 + h_4 - h_3 + \frac{Q_L}{\dot{m}_1} \qquad (3.2)$$

If the heat loss term of Equation 3.2 is negligible, the only measurements required to determine the enthalpy of the sample geothermal fluid are temperatures taken at Points 2, 3, and 4. Complementary pressure measurements are required at Points 2 and 4 to ensure that the fluid is a single-phase liquid.

Based upon the uncertainty analysis presented in Appendix A, Section A.4, the percent uncertainty expected when measuring the enthalpy of the geothermal fluid with the regenerative heat exchanger is less than ±1.5% of the true value. The analysis shows that the heat loss term (Q_L), for a well-insulated heat exchanger does not contribute significantly to the uncertainty of the enthalpy measurement.

The regenerative heat exchanger method has been successfully employed by the Pacific Northwest Laboratory (PNL) and by others[9] over the past eight years to obtain measurements of enthalpy in high-pressure (up to 2300 psi) and high-temperature (620°F) laboratory tests associated with nuclear reactor research and development. The method's advantages are its high accuracy and the fact that flow rate measurements are not required if the heat loss term, Q_L, is negligible.

The principal disadvantages of using the regenerative heat exchanger method as a geothermal calorimeter are: 1) the expense of two heat exchangers estimated between $5,000 to $8,000 per exchanger, 2) the difficulty of cleaning geothermal fouling (scaling) from the heat exchangers, and 3) the restriction that geothermal fluid quality must be below approximately 30 to 40%.

Cleaning of the regenerative heat exchanger is expected to be especially difficult because the geothermal fluid passes through both the tube and shell sides of the heat exchanger. The cool-down heat exchanger could be made less difficult to clean by passing the geothermal fluid through the shell side and the clean cooling water through the tube side.

Because the mass flow rate of the coolant through the regenerative heat exchanger is identical to that of the geothermal sample flow, the amount of cooling that can be accomplished by the recirculating geothermal fluid is limited by the mass flow rate, the degree to which the flow can be subcooled in the cool-down heat exchanger, and the maximum temperature at which the fluid exits the regenerative heat exchanger as a single-phase liquid. These parameters restrict the maximum quality of the flow that can be accepted by the regenerative heat exchanger.

3.1.2 Single-Pass Heat Exchanger (Countercurrent). The single-pass heat exchanger calorimeter uses one heat exchanger as depicted in Figure 2. The multiphase geothermal sample fluid enters the heat exchanger at Point 1, passes through the heat exchanger, losing heat to the cooling fluid, and exits at Point 2 as a single-phase, subcooled liquid. The cooling water enters the heat exchanger at Point 3, flows countercurrent to the geothermal fluid, and leaves at Point 4, remaining in a subcooled liquid state.

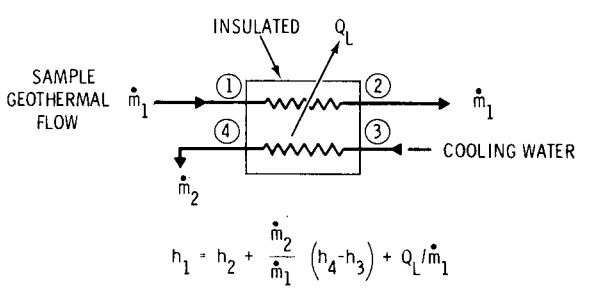

FIGURE 2. Single-Pass Heat Exchanger (Countercurrent)

Assuming a stationary flow process with negligible changes in kinetic and potential energies, the enthalpy (h_1) of the geothermal fluid may be solved for as follows:

$$-Q_L + \dot{m}_1 h_1 + \dot{m}_2 h_3 = \dot{m}_1 h_2 + \dot{m}_2 h_4 \qquad (3.3)$$

or

$$h_1 = h_2 + \frac{\dot{m}_2}{\dot{m}_1}(h_4 - h_3) + \frac{Q_L}{\dot{m}_1} \qquad (3.4)$$

Based upon the uncertainty analysis presented in Appendix A, Section A.5, the percent uncertainty expected when measuring the enthalpy of the geothermal fluid with the single-pass heat exchanger is less than approximately ±2% of the true value. This assumes that the mass flow rates can be measured within ±2%. If this requirement cannot be met then the uncertainty will be larger. The analysis also indicates that the heat loss term (Q_L) for a well-insulated heat exchanger may be neglected in Equation 3.4. Thus, the variables which must be measured are the temperatures at Points 2, 3, and 4 and the mass flow rates of the geothermal fluid sample and the cooling water. Complementary pressure measurements should be made at Points 2 and 4 to ensure that the fluid is a single-phase liquid.

The advantages of the single-pass heat exchanger calorimeter for geothermal use are its relatively high accuracy, applicability over a wide range of fluid qualities, and the fact that the design has been used successfully for several years with two-phase flows in the nuclear industry.

The disadvantages of the single-pass heat exchanger for geothermal calorimetry are: 1) the relative high cost of the heat exchanger ($5,000 to $8,000), 2) the requirement of measuring two mass flow rates, and 3) the difficulty in cleaning the heat exchanger.

3.1.3 Mixing Tee Condenser. The mixing tee condenser calorimeter is a continuous-flow system, schematically shown in Figure 3. The geothermal sample fluid enters the tee at Point 1, while the pressurized process cooling water enters the tee at Point 2. The two are mixed along the third leg of the tee and exit at Point 3 in a subcooled liquid state.

The following set of equations result in an expression for the enthalpy (h_1) of the geothermal fluid. These equations assume that the differences in kinetic and potential energies of fluid entering and leaving the system are negligible, that the flow is stationary, and that no work is performed on the system.

$$-Q_L + \dot{m}_1 h_1 + \dot{m}_2 h_2 = \dot{m}_3 h_3 \qquad (3.5)$$

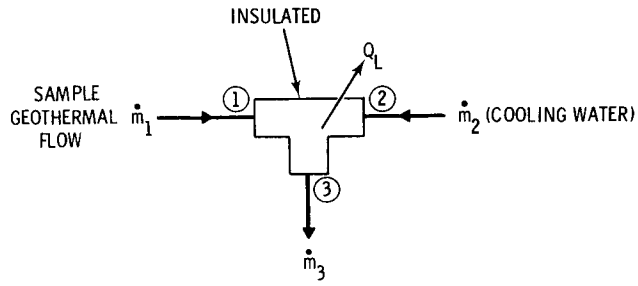

$$h_1 = \left(\frac{\dot{m}_2}{\dot{m}_2 - \dot{m}_3}\right) h_2 + \left(\frac{\dot{m}_3}{\dot{m}_3 - \dot{m}_2}\right) h_3 + \left(\frac{Q_L}{\dot{m}_3 - \dot{m}_2}\right)$$

FIGURE 3. Mixing Tee Condenser

Since $\dot{m}_1 = \dot{m}_3 - \dot{m}_2$

$$h_1 = \left(\frac{\dot{m}_3}{\dot{m}_3 - \dot{m}_2}\right) h_3 + \left(\frac{\dot{m}_2}{\dot{m}_2 - \dot{m}_3}\right) h_2 + \frac{Q_L}{(\dot{m}_3 - \dot{m}_2)} \qquad (3.6)$$

The analysis in Appendix A, Section A.6, indicates that the percent uncertainty in measuring the geothermal fluid enthalpy is less than ±4% of the true value. This assumes that temperatures are measured within ±2°F and that flow rates are measured within ±2% of their true value. For a well-insulated tee, the heat loss term is negligible compared to the other terms as shown in the uncertainty analysis. Therefore, the variables which must be measured are the temperatures, pressures, and the mass flow rates at Points 2 and 3.

The advantages of the mixing tee condenser calorimeter are its simple design, relatively high accuracy, ease of cleaning, anticipated low cost, and applicability over a wide range of fluid qualities. The increased surface roughness caused by geothermal fouling will enhance the insulating and mixing characteristics in the mixing leg of the tee. It is anticipated that the mixing leg could be flanged to a commercial tee such that the tee could be easily cleaned, and the mixing leg could be used until the flow restriction becomes excessive. The mixing leg could be replaced with a low-cost spare, and the original mixing leg could be sent to a laboratory with the number of operating hours for use in scaling analysis.

The disadvantages of the mixing tee calorimeter for use in geothermal applications is that two mass flow rates must be measured and the cooling water must be supplied at essentially well-head pressure. The disadvantage of measuring two mass flow rates is most likely insignificant. Supplying cooling water at well-head pressure could be expensive for some wells because a relatively high-pressure booster pump may be required.

3.1.4 Pressurizer Spray Condenser. The pressurizer spray condenser calorimeter is a continuous-flow system, shown schematically in

Figure 4. The representative geothermal fluid sample enters the calorimeter at Point 1 while pressurized process cooling water is injected at Point 2. The flow rate of the cooling water must be sufficient to ensure that the existing flow at Point 3 is in a subcooled liquid state.

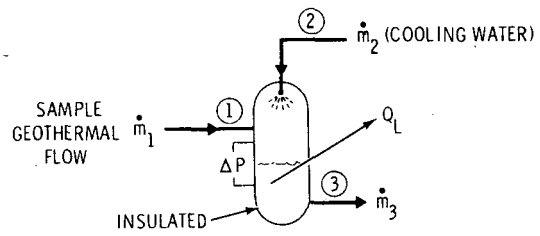

$$h_1 = \left(\frac{\dot{m}_2}{\dot{m}_2-\dot{m}_3}\right) h_2 + \left(\frac{\dot{m}_3}{\dot{m}_3-\dot{m}_2}\right) h_3 + \left(\frac{Q_L}{\dot{m}_3-\dot{m}_2}\right)$$

FIGURE 4. Pressurizer Spray Condenser

The following equation is used to derive a final expression for the enthalpy of the geothermal fluid. It is assumed that the differences in kinetic and potential energies of fluids entering and leaving the system are negligible, that no work is performed on the system, and that the process is stationary.

$$-Q_L + \dot{m}_1 h_1 + \dot{m}_2 h_2 = \dot{m}_3 h_3 \qquad (3.7)$$

Thus $\dot{m}_1 h_1 = \dot{m}_3 h_3 - \dot{m}_2 h_2 + Q_L$

Since $\dot{m}_1 = \dot{m}_3 - \dot{m}_2$

$$h_1 = \left(\frac{\dot{m}_3}{\dot{m}_3 - \dot{m}_2}\right) h_3 + \left(\frac{\dot{m}_2}{\dot{m}_2 - \dot{m}_3}\right) h_2 + \frac{Q_L}{(\dot{m}_3 - \dot{m}_2)} \qquad (3.8)$$

Note that Equation 3.8 is identical to Equation 3.6, which is the equation for the enthalpy of the geothermal fluid using a mixing tee. The basic difference between the two processes is the method by which the geothermal fluid and cooling water are mixed.

The uncertainty analysis in Section A.7 of Appendix A indicates that the percent uncertainty in measuring the geothermal fluid enthalpy is expected to be less than ±4% of the true enthalpy value. This analysis assumed that temperatures can be measured to ±2°F and that flow rates can be determined within ±2%.

The advantages of the pressurizer spray condenser calorimeter for enthalpy measurements of geothermal flow are its relatively high accuracy, anticipated medium cost, and applicability over a wide range of fluid qualities. The primary disadvantages of the pressurizer spray condenser is that cooling water must be supplied at well-head pressure, two mass flow rates must be measured, and scale build-up near the outlet could require frequent and somewhat difficult cleaning.

3.1.5 Multiphase Tank. The multiphase tank calorimeter is an evacuated vessel (see Figure 5) into which the multiphase geothermal fluid is injected at Point 1 until the tank pressure comes into equilibrium with the line pressure. The system is also operable if the pressure in the tank is less than the line pressure. The liquid phase, including dissolved solids, will settle to the bottom of the tank (Point 3 in Figure 5) and the liquid level will be measured by pressure differential, acoustic level sensor, or other means.

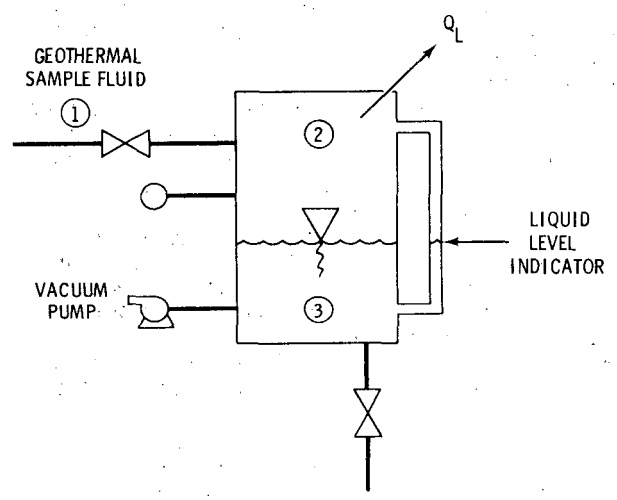

$$h_1 = \left[h_f + X h_{fg}\right]_3 - P_3\left[\upsilon_f + X \upsilon_{fg}\right]_3 + \frac{Q_L}{\rho_3 V_3 + \rho_2 V_2}$$

$$X = \frac{\rho_2 V_2}{\rho_2 V_2 + \rho_3 V_3}$$

FIGURE 5. Multiphase Tank

The following is an analysis of the applicable thermodynamic equations leading to a solution for determining the enthalpy of the geothermal fluid flowing in the sample line.

$$\dot{Q} + \dot{m}_i\left(h_1 + \frac{\bar{V}_1^2}{2g_c J} + \frac{g}{g_c}\frac{Z_1}{J}\right) = \dot{W} + \dot{m}_e\left(h_e + \frac{\bar{V}_e^2}{2g_c J} + \frac{g}{g_c}\frac{Z_e}{J}\right)$$

$$+ \frac{d}{dt}\left(mu + \frac{m\bar{V}^2}{2g_c J} + \frac{mg}{g_c}\frac{Z}{J}\right)_\sigma \qquad (3.9)$$

The subscripts σ, i, and e refer to system values, "into" system values, and "exiting from" system values, respectively.

This analysis for entry of geothermal fluid into the evacuated tank assumes that no work is performed, that no fluid leaves the system, and that the kinetic and potential energies of fluids entering the system are negligible.

Thus

$$\frac{dQ}{dt} + h_1 \frac{dm}{dt} = \frac{dmu}{dt} = \frac{dU}{dt}$$

$$-Q_L + h_1 \int dm = U_{fs} - U_{is} = u_{fs} \left[dm + \cancel{M_{is}}\right]^{0} - u_{is}\cancel{M_{is}}^{0}$$

where

$$\int dm = \rho_3 V_3 + \rho_2 V_2$$

and the subscript "is" refers to "initial system" and the subscript "fs" refers to "final system." Therefore

$$-Q_L + h_1(\rho_3 V_3 + \rho_2 V_2) = u_{fs}(\rho_3 V_3 + \rho_2 V_2)$$

where

$$h_1 = u_{fs} + Q_L/(\rho_3 V_3 + \rho_2 V_2)$$

Thus

$$h_1 = \left[h_f + X h_{fg}\right]_3 - P_3 \left[\nu_f + X \nu_{fg}\right]_3 + \frac{Q_L}{(\rho_3 V_3 + \rho_2 V_2)} \qquad (3.10)$$

The uncertainty analysis presented in Appendix A, Section A.8, shows that the percent uncertainty associated with measuring the enthalpy of geothermal fluids with the multiphase tank calorimeter is estimated to be ±5% of the true enthalpy value. Section A.8 estimates the size of the tank to be approximately 12 ft^3 (90 gallons) to hold a 1/2 min sample from the geothermal sample line.

The advantages of the multiphase tank calorimeter for geothermal use are that the system requires no cooling water and has relatively good accuracy.

The disadvantages of the multiphase tank calorimeter for geothermal use are: 1) the tank must be evacuated by a vacuum pump before operation; 2) several preliminary runs should be made before a measurement run to bring the walls of the tank into thermal equilibrium with the geothermal flow to prevent excessive heat loss to the walls of the container; 3) additional valving at the inlet is necessary so that the geothermal sample line flow is not interrupted by the operation of the system; 4) the liquid level measure may be somewhat difficult; 5) tank cleaning will be required for accurate volumetric measurements; 6) the multiphase tank calorimeter yields an instantaneous sample of the geothermal fluid enthalpy; and 7) vacuum pump seals will most likely have to be replaced often.

3.1.6 Liquidizer. The liquidizer calorimeter permits the determination of the enthalpy by condensing the geothermal fluid. Condensing is caused by compressing and cooling the geothermal fluid with compressed cooling water in a closed tank. The following analysis is used to determine the enthalpy of the geothermal fluid from the final state of the liquid in the tank.

A closed system can be constructed as in Figure 6 to contain the geothermal brine in Tank 2 plus the amount of water required to compress the geothermal fluid to a single-phase liquid state. If the amount of liquid required to compress the geothermal fluid to a single-phase liquid state is

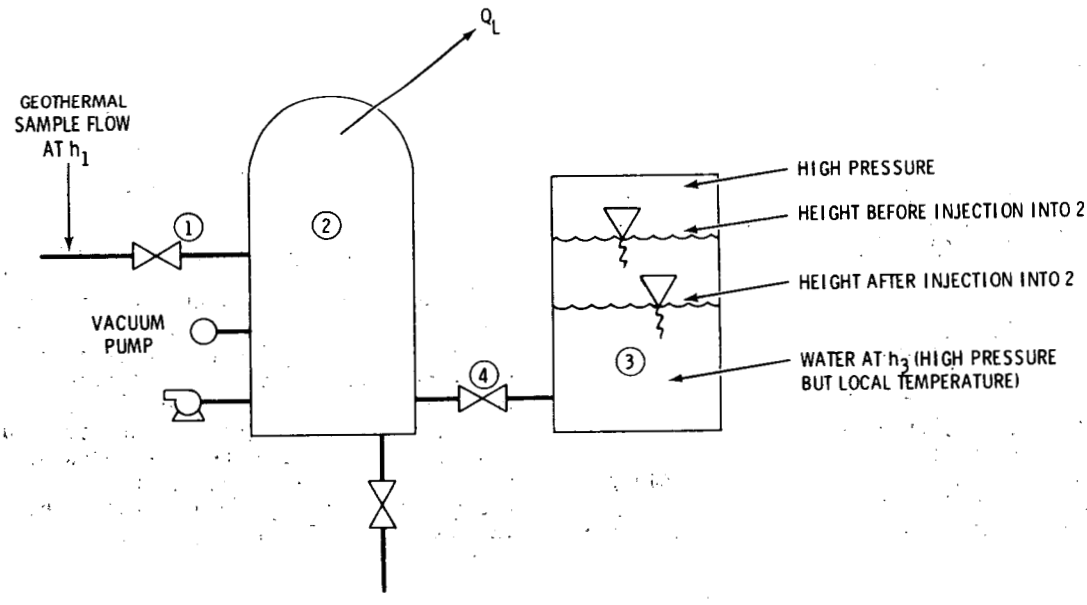

$$h_1 = \left(h_2 - \frac{P_2}{\rho}\right)\left(\frac{V_2}{V_2 - \Delta V_3}\right) - h_3\left(\frac{\Delta V_3}{V_2 - \Delta V_3}\right) + \frac{Q_L}{\rho(V_2 - \Delta V_3)}$$

FIGURE 6. Liquidizer

ΔV_3, then the final volume of geothermal liquid is equal to $(V_2 - \Delta V_3)$, where V_2 is the volume of Tank 2. Assuming the density of the liquid geothermal fluid is approximately equal to the density of the compressed water, the multiphase tank analysis resulted in

$$u_2' = h_1 - \frac{Q_L}{\rho(V_2 - \Delta V_3)}$$

where

u_2' = internal energy in Tank 2 directly after insertion of the geothermal brine.

Upon pressurizing Tank 2 with compressed liquid from Tank 3, the following equation holds.

$$-Q_{L_{final}} = U_{final} - U_{initial} - P_3 \Delta V_3$$

where

$$U_{initial} = \rho(V_2 - \Delta V_3)h_1 - Q_{L_{initial}} + \rho \Delta V_3 u_3$$

and, thus,

$$U_{final} = \rho(V_2 - \Delta V_3)h_1 + \rho \Delta V_3 \left[h_3 - P_3 \nu_3\right] - Q_{L_{initial}} - Q_{L_{final}} + P_3 \Delta V_3$$

$$= \rho(V_2 - \Delta V_3)h_1 + \rho \Delta V_3 h_3 - Q_L$$

$$= \rho V_2 h_2 - P_2 V_2$$

or

$$h_1 = \left[\rho V_2 h_2 - P_2 V_2 - \rho \Delta V_3 h_3 + Q_L\right] / \rho(V_2 - \Delta V_3)$$

or

$$h_1 = \left(h_2 - \frac{P_2}{\rho}\right)\left(\frac{V_2}{V_2 - \Delta V_3}\right) - h_3\left(\frac{\Delta V_3}{V_2 - \Delta V_3}\right) + \frac{Q_L}{\rho(V_2 - \Delta V_3)} \qquad (3.11)$$

From the uncertainty analysis for the liquidizer calorimeter, presented in Appendix A, Section A.9, it was determined that the uncertainty in the measured enthalpy value could be of the same order of magnitude as the actual value of the enthalpy.

The potential advantage for using the liquidizer calorimeter is that only a temperature measurement would be required in the tank containing the geothermal fluid and that limited process water would be required. The principal disadvantage, which became evident upon performing the uncertainty analysis, is that a ±100% uncertainty can exist in the measurement of the enthalpy of the geothermal fluid. This fact alone requires that this system not be recommended for use as a calorimeter. Other disadvantages of this system are similar to those of the multiphase tank.

3.1.7 Quick-Closing Valves. The quick-closing valve calorimeter "snatches" an instantaneous representative sample of geothermal fluid by isolating a section of the flow exiting a geothermal well. A schematic of a quick-closing valve setup is presented in Figure 7.

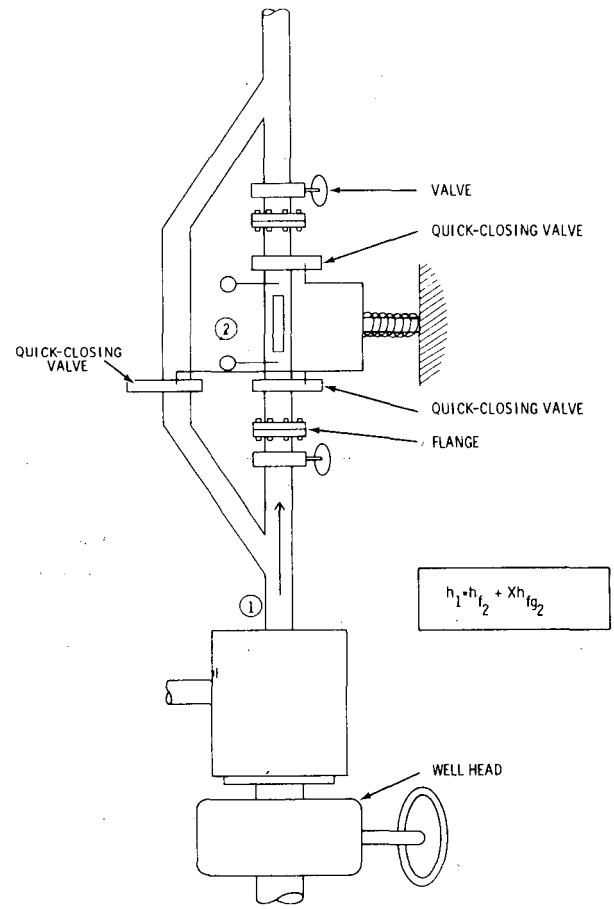

FIGURE 7. Quick-Closing Valves

To obtain a representative sample, two valves close simultaneously, isolating a sample of the geothermal fluid. The action of quickly closing a valve can cause severe water hammer problems. To reduce the water hammer effect, a bypass should be used as shown in Figure 7. The isolated geothermal sample will have the same enthalpy as the flowing geothermal fluid, assuming the kinetic energy of the flow is negligible. The enthalpy of the geothermal fluid is given by:

$$(m_g + m_f)h_1 = m_{g_2} h_{g_2} + m_{f_2} h_{f_2}$$

or (3.12)

$$h_1 = h_{f_2} + Xh_{fg_2}$$

The temperature and liquid level are measured in the isolated sample. From the measurements the enthalpies, h_{f_2} and h_{fg_2}, and quality are determined and used in Equation 3.12 to solve for the geothermal fluid enthalpy.

The uncertainty analysis in Appendix A, Section A.10, indicates that the uncertainty expected in the measured enthalpy value will be approximately ±6% of the true enthalpy value.

The advantages of the quick-closing valve calorimeter for measuring geothermal fluid enthalpies are 1) the system does not require a sample line; 2) the system does not require process cooling water; and 3) the system inherently takes a sample of the entire geothermal flow.

The disadvantages of the quick-closing valve calorimeter for measuring geothermal enthalpies are 1) quick-closing valves large enough for well-head pipe diameters do not appear to have been used previously; 2) quick-closing valve systems in current use have leakage problems; 3) valve seals must be replaced often; 4) the liquid level measurement required in the system may be difficult; 5) some water hammer will be unavoidable; 6) only an instantaneous sample is analyzed and many runs would be required to estimate an average value; 7) although an error analysis indicates a measurement accuracy of ±6%, the true accuracy could be considerably less if there is any leakage or if the valves do not close precisely at the same time; 8) a well would have to be shut down for installation of the system; and 9) if there is flow slippage the measured quality would be different than the flowing quality.

3.2 Comparison of Candidate Calorimeter Methods

The seven candidate calorimeter methods considered were compared on relative merit in the 17 following areas.

1) accuracy
2) reliability
3) maintainability
4) calibration
5) relative cost
6) operability
7) flow regime
8) mode of well operation
9) previous two-phase flow use
10) type of measurement
11) response time and measurement time
12) safety
13) previous use in geothermal wells
14) other advantages in geothermal applications
15) other disadvantages in geothermal applications
16) applicability
17) overall ranking.

Table 2 provides a matrix describing the candidate calorimeter systems and their associated rating with regard to each of the above areas. The following are brief definitions of the 17 areas and the criteria used in each area to determine the relative merit of each candidate method.

1) Accuracy: Accuracies were estimated by performing uncertainty analyses on each of the candidate methods. These uncertainty analyses are presented in Appendix A along with all assumptions. If the uncertainty associated with the measurement of the enthalpy was within ±2% of the true enthalpy value, the accuracy was considered excellent. If the uncertainty in the measurement was ±3% to ±6%, the accuracy was considered good.

2) Reliability: Reliability was interpreted to mean the degree to which the calorimeter system could be relied upon to perform satisfactorily under normal geothermal conditions if properly installed.

3) Maintainability or Cleanability: These terms were used to describe the degree of difficulty required to maintain the system in an operational mode and to describe the difficulty in cleaning a system fouled by the geothermal fluid.

4) Calibration: This criteria refers to the number of measurements required which must be traceable to NBS standards.

5) Relative Cost: Relative cost for a production model.

6) Operability: Operability assesses the degree of difficulty and sophistication required to perform a valid field measurement.

7) Flow Regime: This criteria describes the various fluid phases for which the calorimeter may be applied (e.g., multiphase fluid, single-phase liquid, single-phase steam). When the term single-phase is used as a descriptor for geothermal fluids it refers to both single-phase liquid and single-phase steam.

8) Mode of Well Operation: This term indicates whether the calorimeter method is applicable to production wells or wells in the temporary completion stage.

9) Previous Two-Phase Flow Use: This item indicates whether the calorimeter method has previously been used in two-phase flows.

10) Type of Measurement: Type of measurement indicates whether the calorimeter uses a representative sample of the goethermal well-head flow or the total well-head flow.

11) Response and Measurement Time: This term indicates either a time average measurement or an instantaneous measurement. It is anticipated that the enthalpy measurements obtained from instantaneous methods would have to be repeated several times to obtain an average value.

12) Safety: The safety of each system was rated with the understanding that all components would be built to applicable codes.

13) Previous Use in Geothermal Wells: None of the proposed systems are believed to have been used at geothermal well heads.

Selection Criteria \ Calorimeter Candidate Method	Regenerative Heat Exchanger	Single-Pass Heat Exchanger	Mixing Tee	Pressurizer Spray Condenser	Multiphase Tank	Liquidizer	Quick-Closing Valves
Accuracy (uncertainty in measurement %)	Excellent ± 1.5%	Excellent ± 2%	Good ± 4%	Good ± 4%	Good ± 5%	Very poor ± 100%	Good ± 6%
Reliability	High	High	High	High	Medium requirement for initial vacuum could reduce reliability	Very low	Medium fouling & valve seals could reduce reliability
Maintainability or (cleanability)	Poor	Fair	Good	Fair	Fair	Fair	Poor
Calibration	Temperature Calibration only (Easy)	Temperature & Flow rate (Moderate)	Temperature & Flow rate (Moderate)	Temperature & Flow rate (Moderate)	Temperature, Liquid level (Moderately difficult)	Temperature Pressure Volume (Moderately difficult)	Temperature Liquid level (Moderately difficult)
Relative Cost	High	Medium	Low	Medium	Medium-High	Medium-High	High
Operability	Moderate	Moderate	Moderate	Moderate	Moderately difficult	Moderately difficult	Difficult
Flow Regime	Multiphase or single phase liquid	Multiphase or single phase	Multiphase or single phase	Multiphase or single phase	Multiphase or single phase	Multiphase or single phase liquid	Multiphase or single phase
Mode of Well Operation	Production or temporary completion	Production or temporary completion	Production or temporary completion	Production or temporary completion	Production or temporary completion	Production or temporary completion	Temporary completion
Previous 2-Phase Flow Use	Yes	Yes	Yes	Yes	No	No	Yes
Type of Measurement	Sample	Sample	Sample	Sample	Sample	Sample	Total
Response and Measurement Time	Time Average, or continuous measurement (1 hr set up time)	Time Average, or continuous measurement (1 hr set up time)	Time Average, or continuous measurement (1 hr set up time)	Time Average, or continuous measurement (2 hr set up time)	Local measurement, must be performed several times 4 hrs set up time	Local measurement, must be performed several times 4 hrs set up time	Local measurement, must be performed several times 4 hrs set up time
Safety	Good	Good	Good	Good	Good	Good	Good - Potential difficulty with water hammer
Previous Use in Geothermal Wells	No	No	No	No	No	No	No
Other advantages in Geothermal Applications	Only temperature measurements required	Useful over wide range of qualities	Useful over wide range of quality	Useful over wide range of qualities	Useful over wide range of qualities no cooling water required	Limited process water required	Samples entire flow
Other disadvantages in Geothermal Applications	Heat exchanger difficult to clean. requires cooling water	Heat exchanger difficult to clean. Two mass flow rates must be measured, requires cooling water	Two mass flow rates, must be measured, requires cooling water	Two mass flow rates, must be measured, requires cooling water	Requires vacuum in tank prior to operation	Requires a vacuum in primary tank. Very poor accuracy	Instantaneous sample, valve seals must be kept clean
Applicability	Fair	Good	Very good	Fair	Good	Poor	Fair
Overall Ranking	4/5/6	1/2	1/2	4/5/6	3	7	4/5/6

TABLE 2. Comparison of Candidate Calorimeter Methods

14) Other Advantages in Geothermal Applications: This item includes a description of calorimeter system advantages which were not discussed previously.

15) Other Disadvantages in Geothermal Applications: This item includes a description of calorimeter system disadvantages which were not discussed previously.

16) Applicability: The calorimeters relative rating under this criteria is based upon a composite weighting of all of the previous 15 terms. The relative rating is meant to indicate the system's potential for commercial field use.

17) Overall Ranking: This is an ordinal ranking of the calorimeter systems. The system ranked 1 is the most preferable.

3.3 Recommended Calorimeter(s) for Future Testing

Based upon the relative merits of the seven candidate calorimeter methods considered in this study, the mixing tee and single-pass heat exchanger calorimeters are recommended for further development at geothermal well heads where process cooling water is available. Selection of a single method will depend upon the relative ease with which the methods operate with the selected sampling system. It is assumed that most geothermal drilling operations require that cooling water be available for drilling purposes and that this cooling water supply will be in excess of that required for these calorimeter methods. The ±2% to ±4% uncertainty range in the measurement of the geothermal well-head enthalpy was considered satisfactory and could be improved if the mass flow rate of the cooling water can be measured with

better than ±2% uncertainty. Only the regenerative heat exchanger concept was rated as having better accuracy.

The multiphase tank was ranked below the mixing tee because a vacuum must be established prior to sampling, higher cost, more difficult calibration, and the need to perform several measurements to get an average value of enthalpy. However, because the multiphase tank requires no cooling water, the method may be considered for future development for use at geothermal well heads which do not have a supply of process cooling water.

Although the regenerative heat exchanger was rated as having better accuracy than the two recommended systems, it was considered not as applicable, primarily because of the difficulty associated with cleaning the geothermal fouling from two heat exchangers. The heat exchangers were also deemed more expensive and less compact than the recommended systems. The regenerative heat exchanger concept may be considered if higher accuracy is desired.

The pressurizer spray condenser, which is similar in many respects to the mixing tee, was felt to be more difficult to clean, is more expensive and less portable than the mixing tee, and is not recommended for future development.

Quick-closing valves were rated below the mixing tee and single-pass heat exchanger because of the difficulty in maintaining a good seal, the difficult operability, and higher cost. The quick-closing valve system is best suited for wells in the temporary completion stage. The principal advantages that the quick-closing valve calorimeter would have are that neither a sample line nor cooling water are required.

The liquidizer is not recommended for future testing because of its extremely low measurement accuracy. The liquidizer also has all of the disadvantages of the multiphase tank.

4.0 GEOTHERMAL FLUID SAMPLING TECHNIQUES

The purpose of this section is to present candidate techniques for withdrawing representative fluid samples from flowing geothermal wells at the well head. The development of sampling techniques considered 1) requirements such as accuracy and compatability with candidate calorimeters and 2) the environment in which the sampling probes must operate. These considerations are discussed in detail in the following subsections. Five candidate sampling techniques are then described, after which the retractable, multiple equal-area ports (REAP) probe is recommended for future development.

4.1 Sampling Requirements

An accurate sampling system is essential for the successful development of compact geothermal calorimeters. If the fluid withdrawn from the geothermal well head does not provide a representative sample to the calorimeter, the enthalpy measurement cannot properly represent that of the total geothermal flow. Previous experimental sampling studies of multiphase geothermal fluid have been complicated because the liquid and vapor phases are neither well mixed nor well separated.[10,11,12] Candidate sampling systems must not only be capable of drawing off a representative amount of fluid at a selected location, but must also permit the determination of the coordinates of the sample location.

Geothermal fluids are typically characterized by relatively low temperatures (212 to 650°F). It is apparent that the lower the fluid temperature, the greater the inaccuracy in calorimetric measurement due to inappropriate sample point selection. This is because the differences between saturated liquid and saturated vapor enthalpies is much greater at lower saturation temperatures (see Figure 8). For example, consider a flow sampling device positioned improperly such that the quality of the sample flow is ±5% of the average. The final calorimetric enthalpy measurement would have a ±7.3% error at a fluid temperature of 212°F, a ±5.8% error at 350°F, and a ±3.1% error at 600°F.

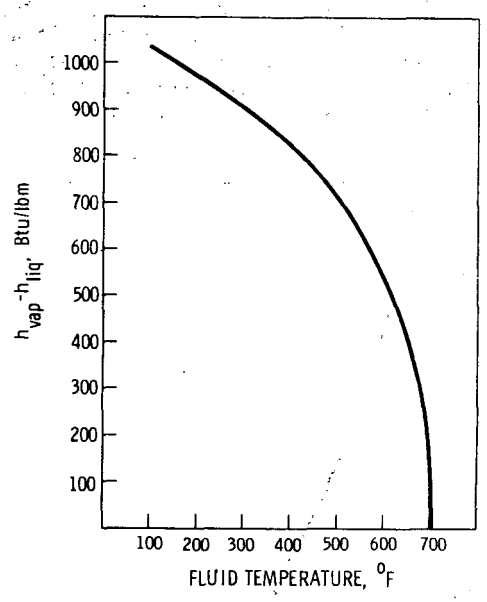

FIGURE 8. Evaporative Enthalpy Versus Fluid Temperature

The quality of geothermal fluid at the selected sampling location and the fluid velocity gradient in the radial direction have strong effects on enthalpy measurements. The velocity gradient in the radial direction is caused by the walls where a no-slip condition exists, causing the formation of a boundary layer which exists across the flow. The maximum shear occurs near the wall, with the shear going to zero at the center. This results in a velocity profile which is maximum at the center of the pipe and minimum at the walls. The magnitude of the velocity gradient is largest near the walls, and zero at the pipe center line. These characteristics are present in all flows but may not be apparent from instantaneous measurements in non-steady or quasi-steady flows. It is suspected that for geothermal applications the flow will be completely turbulent and the mean velocity profile will be a function of

the quality of the flow, pipe characteristics (roughness, diameter, etc.), flow regime (slug flow, annular flow, bubble flow, churn flow), flow rate, and inlet and outlet temperatures and pressures.

For annular flow, the less-dense higher-quality steam will be concentrated in the central, high-velocity, regions. That is, there are fluid quality and velocity distributions in the radial direction. Unless the selected fluid extraction technique accounts for these radial distributions, the sample may not be representative of the entire flow.

Again, the fact that geothermal fluids are found at relatively low temperatures introduces a sampling problem. Figure 9 shows a graph of relative density (saturated liquid/saturated vapor) versus saturation temperature. Notice the change of over four orders of magnitude in relative density between 100 and 700°F. This indicates that the lower the fluid temperature, the larger the relative density ratio of the liquid and gaseous phases. Since this density gradient exists across the pipe radius, it will have an effect on the velocity profile in the radial direction. If a single point is used to withdraw a fluid sample, the relative density effect could increase the error associated with the enthalpy measurement.

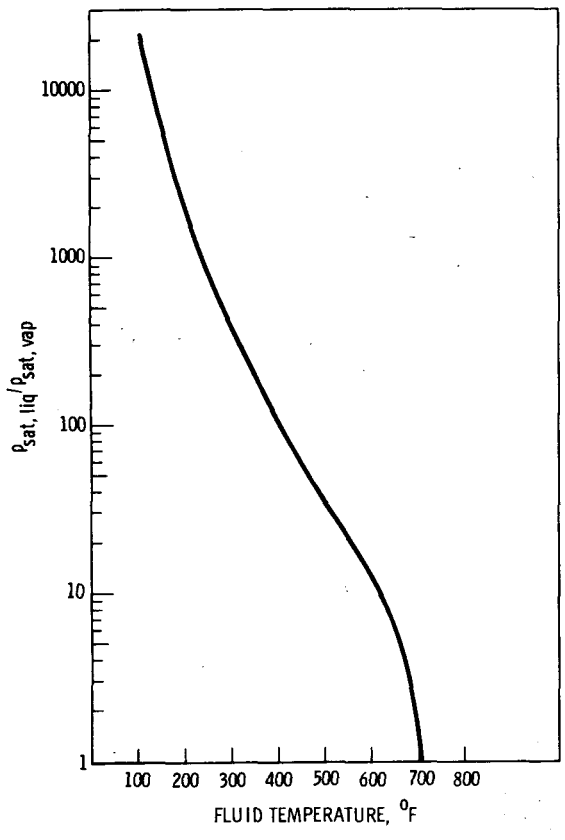

FIGURE 9. Density Ratio Versus Fluid Temperature

In general, a sampling system is needed that will account for the major effects of quality and velocity variations, that will be durable enough to exist in the geothermal environment, that will be flexible enough to use at a variety of well sites with minor modifications, and that will be compatible with the installed well-head piping. The sampling configuration must also be consistent with the selected calorimeter design. To select a design which meets the above criteria, four major steps were taken during this phase of the geothermal calorimetry project:

1) characterize the operating environment of the sampling device

2) review the availability and adequacy of existing sampling techniques

3) modify existing methods or establish new methods of multiphase fluid sampling

4) evaluate and select flow sample device(s) for further development including testing at actual geothermal well heads.

The discussion of these steps in the following sections is designed to help explain and support the decisions made as to the most appropriate sampling system, which is recommended for future development.

4.2 Operating Environment

Geothermal fluids may consist of single-phase water, two-phase steam/water, superheated steam, precipitates in and out of solution, noncondensible gases (CO_2, CH_4, N_a, and H_2), and particulates. The flow, although quasi-steady-state, is neither uniform nor homogeneous. In addition, there are markedly different fluid characteristics depending on the specific locations of the geothermal well sites: temperatures range between 212 and 650°F; total dissolved solids (TDS) range between 200 and 350,000 ppm; pH ranges between 1.4 and 9.6; and the fluids may be considered as brine, saline, brackish, or fresh. Over 26 common elements are found in varying concentrations in typical geothermal fluids.[13] Even if only one well site is considered, the fluid properties can be markedly different, depending on the exact location of the downhole sample.

The variations in fluid thermophysical properties are not the only variables that affect representative sampling. The well depth, pipe diameter, mass flow rate, friction factor, drawdown factor, and gas/liquid velocity ratio will affect the selection of an appropriate fluid withdrawal technique. In addition, the piping system layout (bends, valves, orifices, strainers, etc.) and methods by which the plant is operated (steady state or transient) will significantly affect the location of the representative sampling point.

An appropriate sampling system must be configured to operate in a transient, corrosive, environment. Although the general design should be flexible enough to be incorporated into a wide range of plants and/or operating scenarios, no attempt has been made to develop a "worst-case" system. The construction materials, wall thicknesses, protective coatings, and design lifetimes

of a sampling system will necessarily be dependent on a chemical analysis of a particular geothermal fluid.

4.3 Description of Candidate Sampling Configurations

An extensive literature search on sampling of multiphase flows was conducted, and although a large amount of information was available, only References 14 and 15 provided detailed reviews of the current state of the art. The sampling requirements, the operational environment, and the current state of the art of sampling techniques place constraints on design selection. There are certain considerations, however, that aid in determining the type of sampling techniques that may prove applicable. Prior to discussing the five candidate sampling configurations that were evaluated during this study, it is worthwhile to present the considerations that led to the selection of those five systems.

To withdraw a representative sample, the point of withdrawal must not exert a force on the fluid being evaluated. If the sample port deflects the flow towards (suction) or away from (positive pressure) the withdrawal point, two complications result. First, the fluid may be deflected to different extents depending on its density. Second, if more than one withdrawal point is used to combine and produce an "average" sample, the multiple ports may exert pressure effects on each other and/or deflect flow in a different manner at different withdrawal point locations. Both complications can lead to obtaining a nonrepresentative sample. Therefore, all selected sampling techniques have been configured to allow for isokinetic sampling.

Isokinetic sampling has been used successfully by a number of investigators to experimentally measure flows and enthalpies.[16-19] The basic method involves using static pressure taps at the sample inlet ports and a static pressure tap which measures the free stream static pressure. Throttling flow control valves placed between each sample line and the calorimeter are adjusted until the isokinetic static pressure difference between the measuring points matches a null value or some other predetermined value.

A primary consideration is whether the sampling device will be designed to withdraw representative flows from both the main channel (high quality) and the surface layer (low quality) near the pipe wall. Because of the problems that would be encountered in trying to combine and operate two separate sampling systems, and because of the uncertainty in establishing where the dividing line between the region of applicability exists, a single configuration for fluid withdrawal was deemed appropriate.

Two shape characteristics were considered: 1) the profile presented to the flow by the probe housing that contains the sample ports and 2) the shape of the inlet ports. These characteristics are discussed in Appendix B. A preliminary evaluation resulted in the recommendation that a straight-pass, circular-inlet port housed by a circular probe be used.

In addition to the above criteria, three options were considered. First, should the samples be withdrawn with single or multiple ports? Second, should the probe, which houses the single or multiple sampling lines, be fixed or traversable? Third, should the probe be retractable from the flow stream without shutting a well down? Combining the three options resulted in four logical candidate systems:

- single port - fixed - nonretractable
- single port - traversable - retractable
- multiple ports - fixed - nonretractable
- multiple ports - fixed - retractable

For the multiple-port, retractable probe, two options were considered: 1) linear-spaced, variable-area ports, and 2) nonlinear-spaced, equal-area ports. The multiple-port, fixed, nonretractable system would require a much more extensive effort for removal, inspection, cleaning, and reinstallation. Because of the problems associated with differential clogging of different inlet port areas and the effect of clogging on fluid sampling accuracy, the first option was not considered for the nonretractable systems.

4.3.1 Single-Port, Fixed, Nonretractable Probe. If multiphase homogeneous flow existed, then a single sample point could conceivably draw off a representative sample. The design shown in Figure 10 would provide a simple, relatively low-cost system. However, the fixed probe would be subject to continuous exposure, could not be used to check for asymmetric flow in the pipe, and would not permit mapping of the radial enthalpy and quality profiles. An additional problem is introduced by the required size of the probe. If the inlet port is positioned at the pipe center (for example), a 1% extraction of fluid will require a probe that at a minimum produces a 6.5% flow blockage. The increased aspect area will

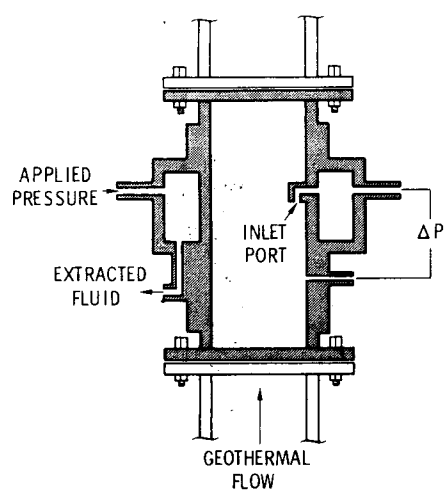

FIGURE 10. Single-Port, Fixed, Nonretractable Probe

require special materials to ensure the probe is strong enough to withstand the impact forces, and prevent flutter or axial vibration. It would be possible to have the probe extend completely across the pipe and be anchored at the far side; however, this would double the required probe aspect area.

4.3.2 Single-Port, Traversable, Retractable Probe. Using a single-port, traversable sampling probe would eliminate exposure and mapping problems. Figure 11 shows a sketch of a retractable probe which enters the geothermal flow through a hole in a spool piece. The probe is mounted on a screw which is used to traverse the probe. When the probe is removed, a gate valve on a spool piece is closed, sealing off the probe entry location. If flutter is expected, separate fixed probes may be used which when interchanged allow different points to be sampled. This latter method would include the anchoring mechanism for the probe which reaches completely across the pipe. A variation of the traversable probe concept would be to move the sample port across the radial length of the probe. The rate of traversal would be set such that the time in each position is proportional to the area of the annular ring at the radius being sampled. While this method has been used,[19] there are certain inherent problems:

- The traverse speed and position control introduces a new source of error.
- Simultaneous samples are not possible.
- A moving probe will change the backpressure on the sample line during the traverse, making isokinetic sampling more difficult.
- Noncircular inlet ports cannot be used.
- At maximum extension, the probe thickness will necessarily be large to prevent flutter or vibration.
- Since the quality and enthalpy of the mixture being withdrawn will vary during the traverse, the calorimeter will need to be designed to operate with transient inlet conditions.

Like the nonretractable, single-port probe, the traversable system has the problems of not permitting simultaneous readings, producing flow blockage, and possible flutter or vibration.

4.3.3 Multiple-Port, Fixed, Nonretractable Probe. As shown in Figure 12, it is possible to use a single sample probe or cross supports mounted to allow siting of an array of sample points. This will result in less blockage relative to the percentage of flow extracted and allow for simultaneous sampling. The continuous exposure problem and the necessity to interrupt plant operation to remove, clean, change or inspect, and reinstall the sampling hardware still remain as major drawbacks. The siting of sample points is based on equal area ports, spaced nonlinearly as discussed in Appendix C. The basic intent of the nonlinear spacing is to position the ports to adequately represent the annular regions.

4.3.4 Multiple-Port, Fixed, Retractable Probe. Figure 11 can be easily configured to have multiple-inlet ports, with the withdrawal ports sized and sited in either of the two manners discussed in Appendix C:

- nonlinear (variable) spacing, equal area (retractable with equal-area ports, REAP)
- linear (equal) spacing, variable area

4.4 Recommended Sampling Configuration for Future Development

Table 3 gives a breakdown of the five configurations and the attributes used to evaluate their performance and provide an ordinal ranking. Although individual requirements may suggest the use of alternate systems, the preliminary design that appears to be the most promising consists of a retractable, isokinetic probe with nonlinear spacing of the multiple equal-area inlet ports, REAP. The advantages of such a design are summarized below for clarification:

1) The REAP configuration does not interfere with plant operations before, during, or after obtaining enthalpy measurements.

2) Radial profile measurements are possible.

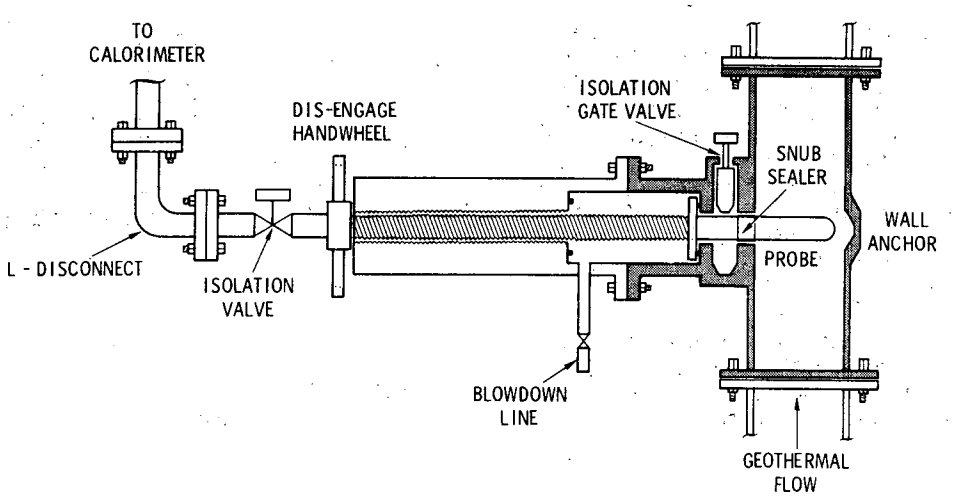

FIGURE 11. Traversable, Retractable Probe

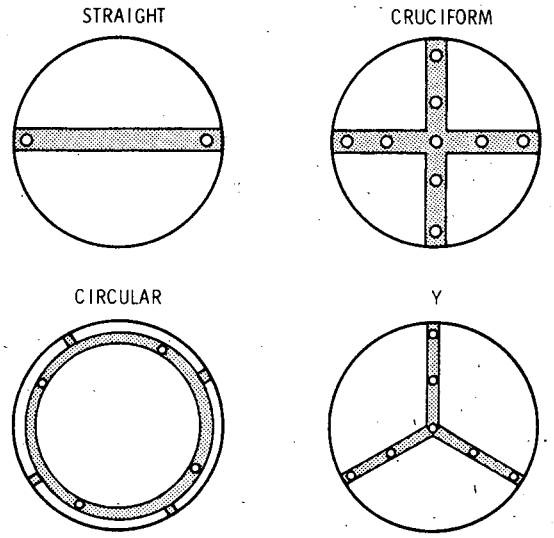

FIGURE 12. Multiple-Port, Fixed, Nonretractable Probes

3) The sampling equipment is only intermittently exposed to the geothermal environment.

4) Sample probes can be substituted.

5) The flow restriction is relatively small.

6) The configuration allows a minimum number of penetrations in the well-head piping.

7) Cleaning is relatively simple.

8) The system provides simultaneous flow sampling.

9) More sample ports occur in the regions of maximum velocity gradients and quality gradients along the pipe wall.

10) When used in conjunction with the calorimeter systems recommended in Section 3.3, the REAP sampling probe can

System \ Attributes	Construction Simplicity	Subjection to Continuous Exposure	Ability to Withdraw Sample Instantaneously	Ability to Map Flow Region	Ease of Cleaning	Interchangeability of Probe Types	Interference with Plant Operation	Required Aspect Area	Susceptibility to Accuracy Changes	Ordinal Ranking
Single-Port, Fixed, Nonretractable Probe	+	-	-	-	-	-	-	-	+	5
Single-Port, Traversable, Retractable Probe	-	+	-	+	+	+	+	-	+	3
Multiple-Port, Fixed, Nonretractable Probe	+	-	+	-	-	-	-	+	+	4
Multiple-Port, Fixed, Retractable Probe (Equal Area Ports)	-	+	+	+	+	+	+	+	+	1
Multiple-Port, Fixed, Retractable Probe (Variable Area Ports)	-	+	+	+	+	+	+	+	-	2

TABLE 3. Configuration-Attributes Evaluation

possibly be used to estimate total mass flow rates.

11) The chemical composition of the geothermal sample fluid should be representative of the average composition of the total geothermal flow.

5.0 FUTURE TESTING OBJECTIVES

The purpose of this section is to describe the test objectives associated with laboratory and field testing of the recommended calorimeters and sampling probe was well as to provide a preliminary test procedure.

5.1 Sample Probe Testing

The purpose of testing the REAP sampling probe is to evaluate its usefulness for withdrawing a representative fluid sample from a geothermal well head under varying conditions of enthalpy and quality. Laboratory testing of the probe should be performed in a thermal hydraulics facility such as the high-pressure/temperature heat transfer facility located at PNL. Controlled laboratory testing will permit an evaluation of the operation and accuracy of the recommended probe/calorimeter(s) and well-head spool piece. The evaluation would include probe insertion, retraction, and operation in pressurized single- and two-phase flows. Enthalpy and mass flow rate estimates will be obtained with the probe/calorimeter systems and be compared with values obtained with calibrated temperature (enthalpy) and flowmeter devices. Successful laboratory testing will identify mechanical design problems, provide accuracy information, and minimize problems during field testing of the probe/calorimeter systems.

Once laboratory testing has been completed, the well-head spool piece and probe/calorimeter(s) should be installed on a geothermal well head for final field testing and evaluation. The isokinetic probe will be inserted into the well-head flow while the well is operating, and sample fluid will be supplied to calorimeters for enthalpy determination. Samples of the withdrawn well-head fluid will be chemically analyzed and compared to results obtained by conventional sampling methods.

5.2 Calorimeter Testing

The purpose of testing the calorimeters is to evaluate their performance in controlled laboratory and actual geothermal well-head environments (lab/well environments). The mixing tee and single-pass heat exchanger calorimeters each use a small sample of the geothermal well-head flow, which allows complementary testing of the REAP probe/sampling system. The testing requirements of the sampling probe were discussed in Section 5.1.

To evaluate the accuracy of enthalpy determinations using either the mixing tee or the single-pass heat exchanger, the actual enthalpy of the lab/well fluid must be known. The value of the actual enthalpy of the fluid may be obtained using the steam tables[8] by measuring the upstream fluid temperature and pressure when the fluid is a single-phase liquid. The fluid pressure is then reduced such that the quality of the lab/well fluid may be varied at the sample withdrawal location. The sample is then passed through the calorimeters from which the enthalpy is determined and compared to the upstream enthalpy. Heat losses between upstream and sample withdrawal locations must be eliminated or determined to permit a meaningful comparison.

5.3 Total Mass Flow Rate Estimates

Appendix C provides the theory by which the REAP probe and either of the recommended calorimeters may be used to estimate the total mass flow rate in a laboratory simulation or actual geothermal well. Basically, an estimate of the total mass flow rate is obtained by multiplying the sample mass flow rate by the ratio of the total lab/well cross sectional flow area to the sum of the REAP probe sampling port cross sectional areas. The evaluation of the system will require that a venturi or other mass flow rate measuring device be placed in an upstream section where the lab/well flow is a single-phase liquid. The measurement of the total mass flow rate obtained with the REAP probe/calorimeter systems will then be compared against the upstream mass flow rate measurement.

5.4 Well Selection

Three candidate geothermal well sites (East Mesa, Hawaiian, and the Geysers) were contacted by PNL personnel and considered as potential sites for field testing the recommended calorimeters and sampling system. The following well-head requirements were considered:

- Upstream enthalpy must be measurable.
- The well must be able to be shut down for system installation and special tests.
- Well-head mass flow rate must be measurable.
- Capability to vary fluid quality at withdrawal location must be available.
- Office space and electrical services are desirable.

The East Mesa Test Facility is the only candidate well which meets all of the above requirements. Also the management of that facility has expressed a strong desire to have field calorimetry testing performed there, and has indicated that support personnel and facilities would be available during testing. Therefore, it is recommended that the East Mesa Test Facility be used for testing the REAP sampling probe, the mixing tee condenser calorimeter, and the single-pass heat exchanger calorimeter.

5.5 Preliminary Test Requirements and Procedures for Sample Probe/Calorimeters

This section lists the measurements necessary to evaluate the abilities of the REAP sample probe, the mixing tee condenser calorimeter and the single-pass heat exchanger calorimeter. A preliminary procedure is also provided for testing the combined sample probe/calorimeter system.

5.5.1 Required Measurements Associated with the REAP Sample Probe. Once single-phase liquid is assured at a location upstream from the sample withdrawal location and isokinetic sampling is occurring at each sample port, the following measurements should be obtained:

1) temperature, pressure, and mass flow rate at an upstream location where the flow is a single-phase liquid

2) temperature and pressure of the total flow near the region of sample withdrawal

3) temperature and pressure of the combined flow from the individual sample lines

4) enthalpy and mass flow rate of the withdrawn sample (These measurements will be made with the calorimeters presented in the following sections.)

5) the total lab facility/well head mass flow rate calculated using Equation C.4 presented in Appendix C.

Comparisons should be made between the chemical properties of the geothermal fluid withdrawn from the REAP sampler and the average geothermal fluid flowing through the well. The representativeness of the withdrawn sample may be partially evaluated by induction from the results obtained from the enthalpy and mass flow rate measurements as well as from measured geothermal fluid properties.

5.5.2 Required Measurements Associated with the Mixing Tee Condenser. Once single-phase liquid is assured at the downstream measurement location in the mixing leg and all sample lines are operating isokinetically, the following measurements should be obtained:

1) temperature and mass flow rate of process cooling water

2) temperature, pressure, and mass flow rate of the combined cooling water and test fluid in the mixing leg

3) temperature and pressure of the test fluid (not necessary for the enthalpy computation)

4) the enthalpy computed for the single-phase liquids existing in the cooling water leg and the mixing leg

5) enthalpy of the test fluid calculated using Equation 3.6 presented in Section 3.1.3 (The heat loss through the well-insulated sampling device and calorimeter may be assumed small.)

6) the total lab facility/well head mass flow rate calculated using Equation C.4 presented in Appendix C.

5.5.3 Required Measurements Associated with the Single-Pass Heat Exchanger. Once single-phase fluid is assured at the exit of the single-pass heat exchanger and all sample lines are operating isokinetically, the following measurements should be obtained:

1) temperature (enthalpy), pressure, and mass flow rate of the test fluid exiting from the single-pass heat exchanger

2) entrance and exit temperatures, pressures, and mass flow rate of the cooling water

3) temperature and pressure of the sample fluid (not necessary for the enthalpy computation)

4) the enthalpy computed for the exiting sample fluid and the enthalpy of the entering and exiting cooling water

5) enthalpy of the test fluid calculated using Equation 3.4 presented in Section 3.1.2 (The heat loss through the well-insulated sampling device and calorimeter may be assumed small.)

6) the total lab facility/well head mass flow rate calculated using Equation C.4 presented in Appendix C.

5.5.4 Preliminary Test Procedure for Sample Probe/Calorimeter(s). The following condensed procedure may be used to test the sampling calorimeter systems under controlled laboratory or field conditions:

- A vertical section of the lab facility/well head must be modified to permit installation of the spool piece which includes the sampling device and insertion valve hardware. Upstream temperature probes must be installed to permit determination of the fluid enthalpy where the flow is a single-phase liquid. An upstream mass flow rate measuring device must also be installed if the REAP probe/calorimeter systems are to be evaluated for measuring total lab/well head flow rates. Once this is accomplished, the lab facility/well may be operated at all times whether the sampler is in, out of, or being inserted/retracted from the flow channel.

- The main sample line is then attached to the calorimeter inlet line and cooling water supplied to the calorimeter.

- The valves on each sample line (one to each port) should be closed and the sample probe inserted into the flow channel.

- With the lab facility/well flowing, the valves on each sample line will be adjusted to give a null (zero) pressure difference between the static reference pressure tap and the static pressure tap located in each sample port. Once this is achieved, isokinetic sampling is attained.

- The mixing tee calorimeter cooling water and exit pressure must be adjusted to insure the

single-phase liquid exists in the downstream measurement location of the mixing leg.

- The cooling water mass flow rate must be adjusted in the single-pass heat exchanger as well as the exit pressure of the sample to insure that the fluid exiting the heat exchanger is a single-phase liquid.
- At all times, the differential pressures assuring isokinetic sampling must be monitored and adjusted.

APPENDIX A - UNCERTAINTY ANALYSIS FOR CALORIMETER METHODS

A.1 Introduction

The purpose of this appendix is to estimate the accuracy (uncertainty) of each candidate calorimeter system for determination of the enthalpy of multiphase geothermal flows. The uncertainty associated with the enthalpy determined with each calorimeter will be used as one measure for comparing the various calorimeter methods.

A.2 General Procedure

Each candidate calorimeter method relies on a number of experimental measurements of intensive and extensive thermodynamic properties of the geothermal fluid and, in certain cases, a cooling fluid.

In all cases the enthalpy of the geothermal fluid is denoted as h_1 and is written as a function of several other variables. This may be expressed as:

$$h_1 = f(X_1, X_2, X_3 \ldots X_n) \tag{A.1}$$

From the chain rule for differentiation the substantial or total derivative of h_1 is expressed as

$$dh_1 = \frac{\partial h_1}{\partial X_1} dX_1 + \frac{\partial h_1}{\partial X_2} dX_2 + \frac{\partial h_1}{\partial X_3} dX_3 + \ldots + \frac{\partial h_1}{\partial X_n} dX_n \tag{A.2}$$

The square of dh_1 being

$$(dh_1)^2 = \left(\frac{\partial h_1}{\partial X_1}\right)^2 (dX_1)^2 + \left(\frac{\partial h_1}{\partial X_2}\right)^2 (dX_2)^2 + \left(\frac{\partial h_1}{\partial X_3}\right)^2 (dX_3)^2 + \ldots + \left(\frac{\partial h_1}{\partial X_n}\right)^2 (dX_n)^2 + \frac{\partial h_1}{\partial X_1}\frac{\partial h_1}{\partial X_2} dX_1\, dX_2 + \ldots \tag{A.3}$$

Taking an ensemble average, $\langle\ \rangle$, of both sides of Equation A.3, with the restriction that all the variables, X_1, X_2 ... X_n are independent of one another, the following equation results:

$$\langle (dh_1)^2 \rangle = \left\langle \left(\frac{\partial h_1}{\partial X_1}\right)^2 (dX_1)^2 \right\rangle + \left\langle \left(\frac{\partial h_1}{\partial X_2}\right)^2 (dX_2)^2 \right\rangle + \ldots \left\langle \left(\frac{\partial h_1}{\partial X_n}\right)^2 (dX_n)^2 \right\rangle \tag{A.4}$$

where $\langle (\ )^2 \rangle$ is the variance of ( ), and the square root of the variance is the standard deviation. Since both sides of Equation A.4 can be multiplied by any desired constant, it follows that each term of the above equation can be equated to any desired number of standard deviations of the individual variables.

We can, therefore, write Equation A.4 as:

$$W_{h_1} = \left\{ \left(\frac{\partial h_1}{\partial X_1}\right)^2 W_{X_1}^2 + \left(\frac{\partial h_1}{\partial X_2}\right)^2 W_{X_2}^2 + \ldots \left(\frac{\partial h_1}{\partial X_n}\right)^2 W_{X_n}^2 \right\}^{1/2} \tag{A.5}$$

where W_{h_1} and W_{X_n} are the uncertainties in the measurements of h_1 and X_n within a desired confidence level. Unless otherwise stated, a confidence level of 95% was used throughout this uncertainty analysis. This means that 19 out of 20 samples will fall within the value indicated by W_{h_1} or W_{X_n}.

Since Equation A.5 is a general equation for the uncertainty, it will be used for all uncertainty analysis performed in this text without being rederived for each case.

The percent uncertainty is calculated by dividing the uncertainty, calculated from Equation A.5, by the nominal value of the variable. That is:

$$\%\ \text{uncertainty} = \pm \frac{W_{h_1}}{h_1} \tag{A.6}$$

A.3 Uncertainties Associated with Specific Variables

This section examines the uncertainties associated with some of the variables common to many of the candidate calorimeter designs.

A.3.1 Uncertainty of Enthalpy Measurement of Single-Phase Liquid. The enthalpy of a single-phase liquid is strongly dependent on temperature and only very weakly dependent on pressure. Therefore, the uncertainty associated with the enthalpy of a single-phase liquid may be written as:

$$W_h = C_p W_T \tag{A.7}$$

which comes from the definition of C_p, that is, $C_p = \left(\frac{\partial h}{\partial T}\right)_p$. For the purpose of this paper the uncertainty associated with any temperature measurement is considered to be ±2.0°F. Since C_p is approximately 1.0 Btu/lbm-°R for compressed or saturated water and about 0.5 Btu/lbm-°R for superheated or saturated vapor in the temperature and pressure ranges associated with geothermal well-head flows, the uncertainty of any specific enthalpy measurement is

$$W_h = \pm 2.0 \frac{\text{Btu}}{\text{lbm}} \text{ (subcooled or saturated water)}$$
$$W_h = \pm 1.0 \frac{\text{Btu}}{\text{lbm}} \text{ (superheated or saturated steam)} \tag{A.8}$$

A.3.2 Uncertainty of Heat Loss from a Heat Exchanger. From previous experience, the heat loss, Q_L, from a single-pass heat exchanger is approximately 20 Btu/min for heat exchanger shell temperatures consistent with nominal geothermal well-head fluid temperatures. It is to be noted the heat loss from the heat exchanger is a function of the heat exchanger shell temperature. The uncertainty associated with heat losses from heat exchangers is of the magnitude of the heat losses. Therefore, the uncertainty associated with heat losses from heat exchangers may be expressed as:

$$W_{Q_L} = \pm 20 \left(\frac{\text{Btu}}{\text{min}}\right) \tag{A.9}$$

or per unit mass flowing through a system

$$W_{q_L} = \pm 20 \left(\frac{\text{Btu}}{\text{min}}\right) / \dot{m} \left(\frac{\text{lbm}}{\text{min}}\right) \tag{A.10}$$

where $\dot{m}$ is the flow rate of the fluid flowing through the system.

A.3.3 Uncertainty of Mass Flow Rate. The uncertainty associated with the measurement of mass flow rate is considered to be equal to ±2.0% of the total mass flow rate.

A.4 Uncertainty Analysis for the Regenerative Heat Exchanger

The equation for the enthalpy of the geothermal fluid entering the regenerative heat exchanger is

$$h_1 = h_2 - h_3 + h_4 + q_L \tag{A.11}$$

From Section A.2 the uncertainty of the geothermal enthalpy measurement may be written as:

$$W_{h_1} = \left[W_{h_2}^2 + W_{h_3}^2 + W_{h_4}^2 + W_{q_L}^2\right]^{1/2} \tag{A.12}$$

The sampling techniques proposed in Section 4.0 of this report indicate that the geothermal sample flow rate will be in the range of 0.5% to 4% of the total geothermal flow from the well head. Based upon nominal flow rates at well head, a value of 30 lbm/min will be used as the flow rate of the geothermal sample.

Using the results presented in Section A.3, Equation A.12 becomes:

$$W_{h_1} = \left[4 + 4 + 4 + \frac{4}{9}\right]^{1/2} = \pm 3.53 \frac{\text{Btu}}{\text{lbm}} \tag{A.13}$$

where the error associated with h_2, h_3, h_4 and q_L are ±2, ±2, ±2 and ±2/3 Btu/lbm, respectively.

The value of the enthalpy of the geothermal fluid ranges from approximately 300 Btu/lbm to 700 Btu/lbm for geothermal fluid qualities for which this system is applicable. Thus, the relative or percentage uncertainty associated with this calorimeter system is less than 1.5%, which may be expressed:

$$\% \text{ uncertainty} = \frac{W_{h_1}}{h_1} = \frac{3.53}{300} < 1.5\% \tag{A.14}$$

A.5 Uncertainty Analysis for the Single-Pass Heat Exchanger

The equation for the enthalpy of the geothermal fluid entering the single-pass heat exchanger has been given in Section 3.1.2:

$$h_1 = h_2 + \frac{\dot{m}_2}{\dot{m}_1}(h_4 - h_3) + q_L \tag{A.15}$$

Using the analysis for uncertainty given in Section A.2, the uncertainty associated with the measurement of h_1 is expressed as:

$$W_{h_1} = \left\{W_{h_2}^2 + \left(\frac{\dot{m}_2}{\dot{m}_1}\right)^2 W_{h_3}^2 + \left(\frac{\dot{m}_2}{\dot{m}_1}\right)^2 W_{h_4}^2 + \left(\frac{h_4 - h_3}{\dot{m}_1}\right)^2 W_{\dot{m}_2}^2 + \left[\frac{\dot{m}_2}{\dot{m}_1^2}(h_4 - h_3)\right]^2 W_{\dot{m}_1}^2 + W_{q_L}^2\right\}^{1/2} \tag{A.16}$$

An $\dot{m}_2$ must be estimated which will extract sufficient heat from the geothermal sample such

that the sample will become a single-phase liquid. A geothermal fluid whose temperature is 390° with an enthalpy of 700 Btu/lbm will be used for estimating m_2. A geothermal fluid in this condition has a quality of approximately 40%, which is well above the qualities expected in the Imperial Valley and is thus a somewhat conservative value. Based upon these conditions, approximately three times as much cooling water must flow through the heat exchanger as geothermal fluid. That is, $\dot{m}_2 \simeq 90$ lbm/min (10.8 gal/min).

For the East Mesa test site, the required cooling water flow rate could be about one-third of the geothermal sample flow rate or about 10 lbm/min (1.2 gal/min). However, for the following analysis the conservative value of 90 lbm/min for the cooling water mass flow rate will be used.

Equation A.16 may now be evaluated using the uncertainty requirements for each variable, as described in Section A.3. Thus, Equation A.16 becomes:

$$W_{h_1} = \left\{(2)^2 + (6)^2 + (6)^2 + (7.2)^2 + (7.2)^2 + (0.67)^2\right\}^{1/2} = \pm 13.4 \ \frac{\text{Btu}}{\text{lbm}} \qquad \text{(A.17)}$$

where the uncertainties associated with h_2, h_3, h_4, m_2, m_1 and q_L are ±2, ±6, ±6, ±7.2, ±7.2 and ±0.7 Btu/lbm, respectively.

The percent uncertainty may be expressed as

$$\%\ \text{uncertainty} = \frac{W_{h_1}}{h_1} = \frac{\pm 13.4}{700} < \pm 2\% \qquad \text{(A.18)}$$

A.6 Uncertainty Analysis for the Mixing Tee Condenser

The equation for the enthalpy of the geothermal fluid entering the mixing tee condenser is given in Section 3.1.3:

$$h_1 = \left(\frac{\dot{m}_2}{\dot{m}_2 - \dot{m}_3}\right) h_2 + \left(\frac{\dot{m}_3}{\dot{m}_3 - \dot{m}_2}\right) h_3 + \left(\frac{Q_L}{\dot{m}_3 - \dot{m}_2}\right) \qquad \text{(A.19)}$$

Using the analysis presented in Section A.3, the uncertainty associated with the measurement of h_1 is given by:

$$W_{h_1} = \left\{\left(\frac{\dot{m}_2}{\dot{m}_2 - \dot{m}_3}\right)^2 W_{h_2}^2 + \left(\frac{\dot{m}_3}{\dot{m}_3 - \dot{m}_2}\right)^2 W_{h_3}^2 + (\dot{m}_3 - \dot{m}_2)^{-2} W_{Q_L}^2 + \left[\frac{\dot{m}_3 h_3 - \dot{m}_3 h_2 + Q_L}{(\dot{m}_3 - \dot{m}_2)^2}\right]^2 W_{\dot{m}_2}^2 + \left[\frac{\dot{m}_2 h_2 - \dot{m}_2 h_3 - Q_L}{(\dot{m}_3 - \dot{m}_2)^2}\right]^2 W_{\dot{m}_3}^2\right\}^{1/2} \qquad \text{(A.20)}$$

For this case the cooling water mixes directly with the geothermal fluid such that the combination of the two results in a single-phase, subcooled liquid at the downstream measurement location. For conservatism, the case for 30 lbm/min of 700 Btu/lbm geothermal fluid at 390°F will again be taken. If a pressure drop in the mixing tee of 50 psi is assumed, 40 lbm/min of cooling water is required to mix with the geothermal fluid to assure that single-phase liquid exists at the exit of the condenser.

The uncertainty associated with measuring h_1, using Equation A.20, becomes:

$$W_{h_1} = \left[(2.7)^2 + (4.7)^2 + (0.7)^2 + (17.3)^2 + (17.4)^2\right]^{1/2} = 25.1 \ \frac{\text{Btu}}{\text{lbm}} \qquad \text{(A.21)}$$

where the uncertainties associated with h_2, h_3, Q_L, $\dot{m}_2$ and $\dot{m}_3$ are ±2.7, ±4.7, ±0.7, ±17.3 and ±17.4 Btu/lbm, respectively.

The percent uncertainty for this case is

$$\%\ \text{uncertainty} = \frac{W_{h_1}}{h_1} = \frac{\pm 25.1}{700} < \pm 4\% \qquad \text{(A.22)}$$

For the East Mesa Well No. 8-1, the percent uncertainty would be approximately:

$$\%\ \text{uncertainty} = \frac{W_{h_1}}{312} = \left[(2)^2 + (4)^2 + (0.67)^2 + (5.3)^2 + (5.3)^2\right]^{1/2}/312 < \pm 3\% \qquad \text{(A.23)}$$

For the mixing tee calorimeter, the lower the quality of the geothermal fluid, the lower the percent uncertainty.

A.7 Uncertainty Analysis for the Pressurizer Spray Condenser

The equation for the enthalpy of the geothermal fluid entering the pressurizer spray condenser is identical to that of the mixing tee. Thus, the uncertainty analysis is also identical and will not be repeated. The relative or percent uncertainty of the measured geothermal fluid is expected to be less than ±4%.

A.8 Uncertainty Analysis for the Multiphase Tank

The equation for the enthalpy of the geothermal fluid in the multiphase tank is given in Section 3.1.5:

$$h_1 = \left[h_f + h_{fg}\right]_3 - P_3\left[\nu_f + X\nu_{fg}\right]_3 + q_L \qquad \text{(A.24)}$$

Using the analysis presented in Section A.2, the uncertainty associated with the measured enthalpy of the geothermal fluid may be written as

$$W_{h_1} = \left[W_{h_f}^2 + (h_{fg} - P_3\nu_{fg})^2 W_X^2 + X^2 W_{h_{fg}}^2 + P_3^2 W_{\nu_f}^2 + P_3^2 X W_{\nu_{fg}}^2 + W_{q_L}^2\right]^{1/2} \quad (A.25)$$

To evaluate Equation A.25, the conservative case of a geothermal flow with a well-head pressure of 215 psia and an enthalpy of 700 Btu/lbm will be used. An estimated ±5% accuracy in the liquid level reading leads to approximately a ±2% accuracy in estimating the quality for values near 40%. The size of the tank is estimated to hold approximately 12 ft^3 of geothermal fluid or about a 1/2-min sample of geothermal fluid with a 40% quality of steam.

Equation A.25 may now be evaluated as follows:

$$W_{h_1} = \left[(2)^2 + (16.7)^2 + (0.16)^2 + (0.00)^2 + (0.002)^2 + (0.67)^2\right]^{1/2} = \pm 16.8 \frac{\text{Btu}}{\text{lbm}} \quad (A.26)$$

where the uncertainties associated with h_f, X, h_{fg}, ν_f, ν_{fg} and q_L are ±2.0, ±16.7, ±0.16, ±0.00 and ±0.67 Btu/lbm, respectively. It is evident from this analysis that the uncertainty in the quality is the dominant variable attributing to the large uncertainty. Also, it is noted that the value of the uncertainty in the quality results from the value of h_{fg}, which multiplies the uncertainty of the quality. Since this value is even larger for lower-quality steam, a conservative estimate of the percent uncertainty is calculated using a reference enthalpy of 400 Btu/lbm and given as follows:

$$\%\ \text{uncertainty} = \frac{W_{h_1}}{h_1} \cong \frac{\pm 16.8}{400} < \pm 5\% \quad (A.27)$$

A.9 Uncertainty Analysis for the Liquidizer

The enthalpy of the geothermal fluid, as measured with the liquidizer calorimeter, is expressed in Section 3.1.6:

$$h_1 = (h_2 - P_2\nu_2)\frac{V_2}{(V_2 - \Delta V_3)} - h_3\left(\frac{\Delta V_3}{V_2 - \Delta V_3}\right) + \frac{Q_L\nu_2}{(V_2 - \Delta V_3)} \quad (A.28)$$

Noting that the uncertainty of V_2 can be neglected because this is a constant which can be measured very accurately. The uncertainty of h_1 may be expressed as:

$$W_{h_1} = \left\{\left[\frac{V_2}{V_2 - \Delta V_3}\right]^2 W_{h_2}^2 + \left[\frac{V_2\nu_2}{V_2 - \Delta V_3}\right]^2 W_{P_2}^2 + \left[\frac{P_2V_2}{V_2 - \Delta V_3}\right]^2 W_{\nu_2}^2 + \left[\frac{\Delta V_3}{V_2 - \Delta V_3}\right]^2 W_{h_3}^2 + \left[\frac{(h_2 - P_2\nu_2)V_2 - h_3\Delta V_3 + Q_L\nu_2}{(V_2 - \Delta V_3)^2}\right]^2 W_{\Delta V_3}^2 + \left(\frac{\nu_2}{V_2 - \Delta V_3}\right)^2 W_{Q_L}^2\right\}^{1/2} \quad (A.29)$$

For the liquidizer calorimeter, the volume V_2 is estimated at 12 ft^3, and a conservative value for ΔV_3 is 11.8 ft^3 for a 20%-quality geothermal fluid at 100 psia. Equation A.29 may now be evaluated as follows:

$$W_{h_1} = \left[(120)^2 + (0.4)^2 + (0.1)^2 + (118)^2 + (118)^2 + \ldots\right]^{1/2} \quad (A.30)$$

where the error associated with h_2, P_2, ν_2 and h_3 are ±120, ±0.4, ±0.1 and ±118 Btu/lbm. The error analysis is stopped at this point because it becomes obvious that the uncertainty in the measurement is unacceptably large. That is, the uncertainty can be of the order of the measurement itself. It must, therefore, be concluded that this concept for a geothermal calorimeter is unacceptable.

A.10 Uncertainty Analysis for Quick-Closing Valves

For the quick-closing valve calorimeter method, Section 3.1.7 gives the following equation for the enthalpy of the geothermal fluid, neglecting the kinetic energy of the fluid:

$$h_1 = h_{f_2} + Xh_{fg_2} + q_L \quad (A.31)$$

Using the analysis presented in Section A.2, the uncertainty associated with the measured enthalpy of the geothermal fluid, h_1, may be expressed as

$$W_{h_1} = \left[W_{h_{f_2}}^2 + h_{fg_2}^2 W_X^2 + X^2 W_{h_{fg_2}}^2 + W_{q_L}^2\right]^{1/2} \quad (A.32)$$

If a 10-ft vertical column of pipe is considered and a flow with 7.7% quality (such as East Mesa Well No. 8-1) and a well-head temperature is 260°F, the column would contain 0.171 ft of

water and 9.829 ft of gas. Assuming that the liquid level can be measured within ±2% leads to an uncertainty in the quality of approximately ±2%.

Using the above uncertainty and the results obtained in Section A.2, Equation A.32 may be evaluated as follows:

$$W_{h_1} = [(2)^2 + (18.8)^2 + (0.08)^2 + (2)^2]^{1/2} = \pm 19 \text{ Btu/lbm} \qquad (A.33)$$

where the estimated uncertainties associated with h_{f2}, X, h_{fg2} and q_L are ±2, ±18.8, ±0.08 and ±2 Btu/lbm.

The percent uncertainty is as follows:

$$\% \text{ uncertainty} = \frac{W_{h_1}}{h_1} \cong \frac{\pm 19.0}{312} < \pm 6.5\% \qquad (A.34)$$

The above analysis was performed assuming that the quick-closing valves operated instantaneously and simultaneously. The lack of this ability will lead to uncertainties larger than that estimated above.

APPENDIX B - SAMPLING PROBE AND INLET PORT DESIGN

B.1 Inlet Port Configuration

Figure B.1 shows the three potential types of inlet port configurations considered in this study: divergent, convergent, and straight-pass. Because of the fluid velocity gradient across the pipe, the convergent and divergent cases would result in different nozzle behavior: enhancing or detracting from the efficiency of the isokinetic fluid collection, depending on the relative flow velocity at the inlet port. Until the exact effect of convergent or divergent nozzles on flow collection can be established empirically, the straight-pass inlet port is recommended.

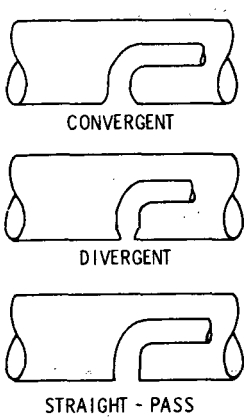

FIGURE B.1.

B.2 Port Opening Shapes

Figure B.2 shows the two alternative types of inlet port opening shapes considered: circular and contour. Circular openings are easier to machine, and if the sample probe is traversed, the circular openings will not have to be corrected for shape. Theoretically, the contour shape will allow for the most accurate geometrical representation of the annulus being sampled (Figure B.2). A circular port will withdraw more fluid than is representative at the midpoint of the annulus and less at the edges.

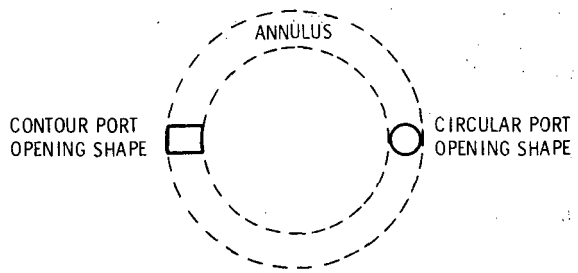

FIGURE B.2.

However, if the inlet port is made small enough so that the radial quality and velocity gradients are small across the port width, minimal opening shape error will be encountered. In addition, flow behavior in the corners of the contour inlet port is such that the effective port shape is somewhat circular, thereby nullifying the purpose of using a contour shape at all. For the reasons given above, and because the expected sample percentage is low (0.5 to 4%), the initial design recommendation is to include circular inlet port(s).

B.3 Sampling Probe Shapes

Figure B.3 shows the four alternative sampling line shapes considered: circular, elliptical, tapered, and streamlined. The ideal sampling line shape in terms of flow blockage and upstream

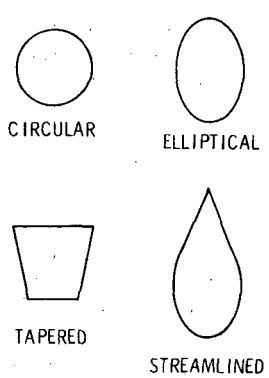

FIGURE B.3.

pressure effects is the streamlined case. However, the more complicated machining and less efficient outlet sample tube packing are major disadvantages. The tapered sampling line has no advantage over the circular design. While the circular sampling line provides for the most efficient packing, the elliptical case does present a better flow restriction profile. By compressing an existing circular sample line, a simulated "elliptical" shell could be created. However, the circular sample probe is recommended for use because it is the more practical and cost effective of the two designs.

APPENDIX C - MULTIPLE-INLET PORT SIZING AND SPACING

C.1 Equal-Port Area, Variable-Spacing Theory

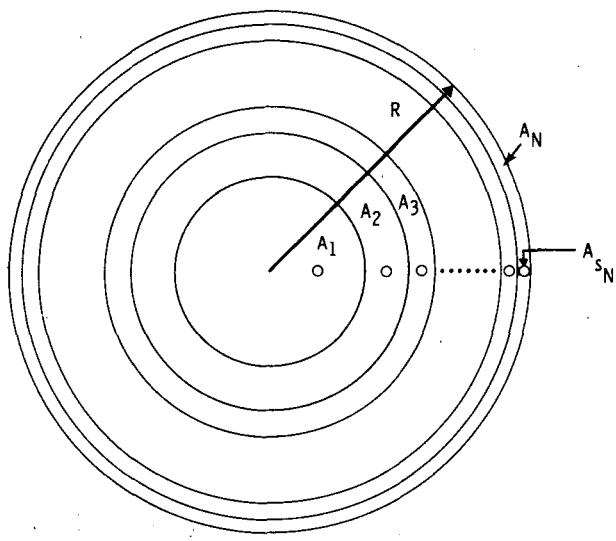

Area 1 = Area 2
= Area 3
= Area 4
= ... = Area N.

where N = number of annuli

1) Area of any annulus = $\pi R^2/N$
2) Radius of inner annulus = $r_1 = R/\sqrt{N}$
3) Radius of Jth annulus = $r_J = R\sqrt{J/N}$
4) Radius of Nth annulus = $r_N = R$
5) Minimum distance between annuli occurs between the (N-1)th and Nth annulus.

$$\Delta r_N = R[1 - \sqrt{(N-1)/N}] \qquad (C.1)$$

Note: Δr_N defines the maximum diameter for the inlet port.

6) Maximum percentage of total area which may be sampled (using both sides: i.e., two sample ports in each annulus, 180° apart) = $\%_A$

$$\%_{A_2} = 200\ N\ \frac{\pi R^2 (1 - \sqrt{(N-1)/N})^2}{4} / \pi R^2$$

$$= 50\ N\ (1 - \sqrt{(N-1)/N})^2 \qquad (C.2)$$

$$= 100\ (N - \sqrt{N^2 - N} - 0.5)$$

$\%_A$ for a single port in each annulus

$$\%_{A_1} = 50\ (N - \sqrt{N^2 - N} - 0.5) \qquad (C.3)$$

Thus, for six annuli -

$\%_A$ = 1.14% (single-port/annulus)

$\%_A$ = 2.28% (double-port/annulus)

for ten annuli -

$\%_A$ = 0.66% (single-port/annulus)

$\%_A$ = 1.32% (double-port/annulus)

The total fluid flowing through the pipe, m_t, is the sum of the annulus flows:

$$\dot{m}_t = \dot{m}_1 + \dot{m}_2 + \ldots + \dot{m}_n$$

The amount of fluid extracted by the sample piping, $\dot{m}_s$, is simply the ratio of port-to-annulus areas $\left(\frac{A_{s_j}}{A_j}\right)$ times the particular annulus flow rate, summed over all annuli.

$$\dot{m}_s = \frac{A_{s_1}}{A_1}\dot{m}_1 + \frac{A_{s_2}}{A_2}\dot{m}_2 + \ldots + \frac{A_{s_n}}{A_n}\dot{m}_n$$

To provide a representative sample for the entire flow, $\dot{m}_s$ must be directly relatable to the entire flow, $\dot{m}_t$. To do this

$$\frac{A_{s_1}}{A_1} = \frac{A_{s_2}}{A_2} = \ldots = \frac{A_{s_n}}{A_n} = C$$

where C is some constant value determined by the total size of sample desired. This leads to:

$$\dot{m}_s = C\dot{m}_1 + C\dot{m}_2 + \ldots + C\dot{m}_n$$
$$\dot{m}_s = C\ (\dot{m}_1 + \dot{m}_2 + \ldots + \dot{m}_n)$$
$$\underline{\dot{m}_s = C\dot{m}_t} \qquad (C.4)$$

For the equal port area, variable spacing method:

$$A_{s_1} = A_{s_2} = \ldots = A_{s_n}$$

Therefore, the width of annuli must be adjusted such that:

$$A_1 = A_2 = \ldots = A_n$$

thereby allowing one constant C value. This is done by varying the space between annulus boundaries.

C.2 Equal Spacing, Variable Port Area Theory

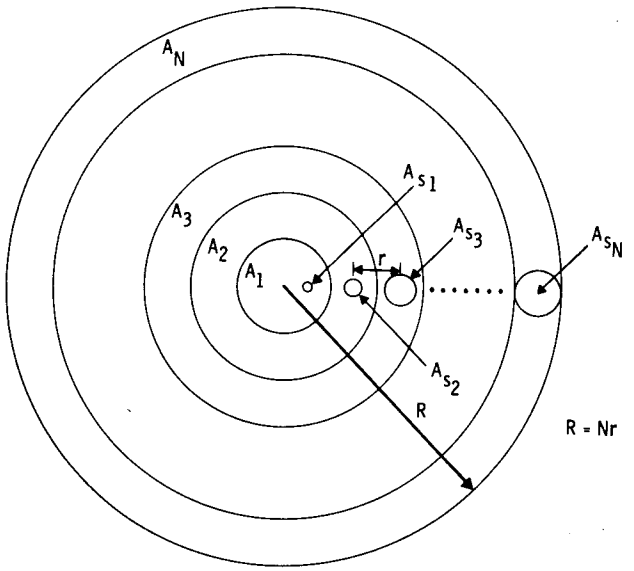

The figure given above depicts N concentric annuli with a sample port located at the center of each annulus. r is the distance between sample ports, which is also the radial distance between consecutive annuli.

Each port size shall be determined such that the ratio of the port area to the area of the annulus which it is sampling is invariant. That is,

$$\frac{A_{s_1}}{A_1} = \frac{A_{s_2}}{A_2} = \ldots = \frac{A_{s_j}}{A_j} = \ldots = \frac{A_{s_N}}{A_N} \qquad (C.5)$$

The area of each annulus is given by:

$$A_1 = \pi r^2 = \pi R^2/N^2$$
$$A_2 = \pi(2r)^2 - A_1 = 3\pi r^2 = 3A_1 \qquad (C.6)$$
$$\vdots$$
$$A_J = \pi(Jr)^2 - A_{J-1} = \frac{(J^2 + J)}{2} A_1$$
$$\vdots$$
$$A_N = \frac{(N^2 + N)}{2} A_1$$

From C.5 and C.6 the area of the Jth sample port is given by

$$A_{s_j} = \frac{(J^2 + J)}{2} A_{s_1} = \frac{(J^2 + J)}{(N^2 + N)} A_{s_N} \qquad (C.7)$$

The limiting sample port is the outermost port whose maximum diameter would be equal to R/N.

Thus $$A_{N_s} = \frac{\pi R^2}{4N^2} \qquad (C.8)$$

and $$\frac{A_{N_s}}{A_N} = \frac{1}{2N(N + 1)} = \frac{A_{s_1}}{A_1} = \frac{A_{s_2}}{A_2} = \ldots \frac{A_{s_j}}{A_j} \qquad (C.9)$$

Therefore

$$A_{s_1} = \frac{\pi R^2}{2N^3(N + 1)} \text{ and } A_{s_j} = \frac{(J^2 + J)\pi R^2}{4N^3(N + 1)} \qquad (C.10)$$

The percent of the total area sampled by the probe (for one sample port in each annulus) is equal to:

% area sampled (for one sample port in each annulus) $$= \frac{A_{s_1} + A_{s_2} + \ldots A_{s_N}}{\pi R^2} (100)$$

$$= \frac{(N + 2)(25)}{3N^2} \qquad (C.11)$$

% area sampled (for two sample ports in each annulus) $$= \frac{50(N + 2)}{3N^2} \qquad (C.12)$$

REFERENCES

1. James, R. 1970. "Factors Controlling Borehole Performance." Paper presented at the U. N. Symposium on the Development and Utilization of Geothermal Resources, 1970, Pisa, Italy.

2. James, R. 1961. "Alternative Methods of Determining Enthalpy and Mass Flow." Paper presented at the U. N. Conference on New Sources of Energy, August 1961, Rome, Italy.

3. Banwell, C. J., and L. Hutt. 1957. "Flow Sampling and Discharge Measurement in Geothermal Bores." Transactions of the ASME. Vol. 79, pg. 269.

4. Hunt, A. M. 1961. "The Measurement of Borehole Discharges, Downhole Temperatures and Pressures, and Surface Heat Flows at Wairakei." Paper presented at the U. N. Conference on New Sources of Energy, August 1961, Rome, Italy.

5. Mahon, W. A. J. 1961. "Sampling of Geothermal Drillhole Discharges." Paper presented at the U. N. Conference on New Sources of Energy, August 1961, Rome, Italy.

6. Belin, R. E., and A. E. Bainbridge. 1957. "Estimation of Dryness Fraction and Mass Discharge of Geothermal Bores." In Proc. Inst. Mech. En. 171(36):967-82.

7. Geothermal Resource Investigations - East Mesa Test Site, Imperial Valley, California; Status Report, U.S. Department of Interior, Bureau of Reclamation, April 1977.

8. The American Society of Mechanical Engineers. 1977. ASME Steam Tables. 3rd ed. New York, New York.

9. Lahey, R. T., Jr., B. S. Sharalkar, D. W. Radcliff and E. E. Polomik. 1971. "Out-of-Pile Subchannel Measurements in a Nine Rod Bundle for Water at 100 psia." Paper presented at the International Symposium on Two-Phase Systems, Technion City, Haifa, Israel, August 1971.

10. Hill, J. H., and C. J. Morris. 1975. Sampling a Two-Phase Geothermal Brine Flow for Chemical Analysis. UCRL-77544, Lawrence Livermore Laboratory, Livermore, California, p. 12.

11. Soda, M., et al. 1975. "Experimental Study on Transient Phenomena in Steam-Water Mixtures Flowing Through a Large Pipe Line for Geothermal Power Stations." Proceedings of 2nd U. N. Symposium on the Development and Use of Geothermal Resources, May 20-29, 1975, San Francisco, California, p. 1793.

12. Adorni, N., G. Peterlongo, R. Ravetta and F. A. Tacconi. 1964. "Phase and Velocity Distribution Measurements in a Round Vertical Tube." CISE R-91, European Atomic Energy Commission, Vienna, Austria.

13. Douglas, J. G., R. J. Serne, D. W. Shannon and E. M. Woodruff. 1976. Geothermal Water and Gas: Collected Methods for Sampling and Analysis. BNWL-2094, Pacific Northwest Laboratory, Richland, Washington.

14. Brockett, G. F., and R. T. Johnson. 1976. Single-Phase and Two-Phase Flow Measurement Techniques for Reactor Safety Studies. EPRI-NP-195. Intermountain Technologies, Inc..

15. Calder, C. A. 1975. Instrumentation for Two-Phase Geothermal Flow. UCID-16806. Lawrence Livermore Laboratory, Livermore, California.

16. Rowe, D. S., and C. W. Angle. 1967. Cross-low Mixing Between Parallel Flow Channels During Boiling - Part 2 - Measurements of Flow and Enthalpy in Two Parallel Channels. BNWL-371PL-2, Pacific Northwest Laboratory, Richland, Washington.

17. Bowring, R. W., and J. Levy. 1969. Freon 7-Rod Cluster Subchannel Mixing Experiments. AEEW-M-906, Atomic Energy Establishment, Winfrith, Dorchester, Great Britain.

18. Lahey, R. T., Jr., B. S. Shiralkar and A. W. Radcliffe. 1971. "Mass Flux and Enthalpy Distribution in a Rod Bundle for Single- and Two-Phase Flow Conditions." Journal of Heat Transfer 93(2):197.

19. Castellana, F. S., and J. E. Casterline. 1972. "Subchannel Flow and Enthalpy Distributions at the Exit of a Typical Nuclear Fuel Core Geometry." Nuclear Engineering and Design 22:3018.