Submitted to Physics Letters B

LBL-926
Preprint

OBSERVED DIFFERENCE IN THE RANGE OF POSITIVE AND NEGATIVE MUONS

Alan R. Clark, R. C. Field, H. J. Frisch, W. R. Holley,
Rolland P. Johnson, Leroy T. Kerth, R. C. Sah, and W. A. Wenzel

June 28, 1972

AEC Contract No. W-7405-eng-48

For Reference

Not to be taken from this room

LBL-926

DISCLAIMER

This document was prepared as an account of work sponsored by the United States Government. While this document is believed to contain correct information, neither the United States Government nor any agency thereof, nor the Regents of the University of California, nor any of their employees, makes any warranty, express or implied, or assumes any legal responsibility for the accuracy, completeness, or usefulness of any information, apparatus, product, or process disclosed, or represents that its use would not infringe privately owned rights. Reference herein to any specific commercial product, process, or service by its trade name, trademark, manufacturer, or otherwise, does not necessarily constitute or imply its endorsement, recommendation, or favoring by the United States Government or any agency thereof, or the Regents of the University of California. The views and opinions of authors expressed herein do not necessarily state or reflect those of the United States Government or any agency thereof or the Regents of the University of California.

0 0 0 0 3 8 0 2 0 9 5

OBSERVED DIFFERENCE IN THE RANGES OF POSITIVE AND NEGATIVE MUONS*

Alan R. Clark, R. C. Field, H. J. Frisch†, W. R. Holley, Rolland P. Johnson††, Leroy T. Kerth, R. C. Sah, and W. A. Wenzel

Lawrence Berkeley Laboratory
University of California
Berkeley, California 94720

June 28, 1972

ABSTRACT

The measured ranges of negative muons are ~0.2% greater than those of positive muons of the same initial momenta in the interval 500-1500 MeV/c. This necessitates a correction to published values for the CP-violating charge asymmetry in K^0 $\mu 3$ decays.

---

*Work done under the auspices of the U. S. Atomic Energy Commission.

†Present address: Enrico Fermi Institute of Physics, Chicago, Illinois.

††Present address: High Energy Physics Institute, Serpukhov, Moscow District, USSR.

Particle range measurement is a technique frequently used in high-energy physics. The most obvious application is in the determination of momentum by the use of range-momentum tables. This technique has been recently used to a precision of ±0.2% [1]. An alternative use is in conjunction with an independent momentum measurement as a means of cleanly segregating particles of different masses. A very important class of experiments makes implicit use of range to fix a lower bound on muon momentum while depleting by nuclear interaction an accompanying hadron background. The experiments described in the literature which have measured the small CP-violating charge asymmetry of the K_L^0 $\mu 3$ decays made use of this last technique and were clearly vulnerable to a charge sign dependence of the range energy relation. The measurement of this effect is the subject of this report.

There have been very few experimental tests of the range-momentum relationship for initial velocities higher than $\beta = \frac{v}{c} \simeq 0.4$[2]. Tests of energy loss in thin samples have been made with typical precision of a few percent up to very high energies, [3] largely to examine the saturation of the relativistic rise in energy loss. No comparison of the energy losses of fast positive and negative particles has been made with precision better than ~ 1% [4]. It should be pointed out that a difference has been observed at very low velocities $\beta < 0.15$ [5] using positive and negative pions stopping in nuclear emulsion. From the observed rates of energy loss the range difference $(R_- - R_+)$ was calculated. It appeared to increase with initial velocity, but reached an

asymptotic value of +6 microns for $\beta > 0.15$, an effect much smaller than that reported here.

The rate of energy loss for a singly charged particle is normally expressed by the Bethe-Bloch formula [6, 7, 8]

$$-\frac{1}{\rho}\frac{dE}{dx} = \frac{2\pi n e^4}{mc^2 \rho \beta^2}\left[\ell n\left(\frac{2mp^2 W}{I^2 \mu^2}\right) - 2\beta^2 - \delta - U\right] \qquad (1)$$

where E is the energy of the particle, p its momentum, and μ its mass. For the stopping material, ρ is the density, x the thickness (in cm), n the number of electrons per cm^3. Parameters of the electrons are e the charge, m the mass, and W the maximum kinetic energy transferrable to it by the passing particle. The symbol I represents the mean excitation energy of the medium, obtained by energy loss or range measurement experiments, δ is the density effect correction [7] and U represents the electronic shell effect corrections [8].

According to the formula, energy loss is independent of the sign of the charge of the slowing particle. A test of this aspect has been made with apparatus designed to search for the rare decay mode $K_L^0 \rightarrow \mu^+\mu^-$ [9]. A detailed description of the equipment has been given elsewhere [10]. A plan view is shown in fig. 1, which illustrates the two wire spark chamber spectrometers symmetrically placed about a neutral beam derived from the Bevatron external proton beam. The high resolution spectrometers were designed to detect the secondaries from charged two-body K_L^0 decays of transverse

momentum 190-250 MeV/c. The secondaries were deflected, one in either arm of the apparatus, roughly parallel to the beam. Hodoscopes F, R and H were placed to trigger the spark chambers on such events.

Particle identification was accomplished by means of Freon 12-filled Cerenkov counters which detected electrons and range telescopes which separated muons from pions. An elevation view of one of the two similar telescopes is shown in fig. 2. The cross-sectional dimensions were 120 cm $\times$ 120 cm. An initial thickness of 43 g cm^{-2} of lead and 160 g cm^{-2} of graphite was followed by 17 scintillators of 2.0 g cm^{-2} separated by varying numbers of steel plates each 20.0 g cm^{-2} thick. On average the range interval between scintillators corresponded to a 7% change in muon momentum.

In addition to $K_L^0 \rightarrow \pi^+\pi^-$ decays which were used to normalize the kaon flux and to calibrate the spectrometers, large numbers of $K_L^0 \rightarrow \mu^\mp\pi^\pm\nu$ decays were recorded. It is from the latter that the data used in this study were taken. The momentum spectrum of muons entering the range detector lay between 500 MeV/c and 1500 MeV/c. Since the direction of the field in the magnets was regularly reversed, particles of both signs were recorded on both sides of the apparatus. Thus, despite the fact that the two range telescopes were not quite identical in thickness, it was possible to measure directly a difference between the ranges of μ^- and μ^+.

Although a range difference was visible in the data after the first analysis, which made use of an effective length parameterization

of the magnets, a more detailed reconstruction has been made for a large sample of the events. This made use of step by step integration of the pion and muon trajectories through the magnetic fields. Small systematic errors ($\lesssim 0.1\%$) in the spectrometer field calibrations were investigated by making use of the kaon mass and direction constraints from the $K_L^0 \to \pi^+\pi^-$ events. A small discrepancy remained between the mean K_L^0 directions for the two sets of data with opposite magnet polarity, and its effect is discussed below. The invariant mass resolution of $\pm$ 1.0 MeV/c^2 corresponded to a momentum resolution of $\pm 0.43\%$ (standard deviation).

The ranges were analyzed most conveniently by considering the momentum distribution of particles stopping in a given range interval between counters (fig. 3). A high momentum tail in the distribution is caused by pions which have either decayed in flight or survived nuclear interaction. A range cut imposed at about 4 standard deviations from the peak limited the pion contamination to about 10% of the events. The distribution of pions under the muon peak was investigated with the K_L^0 e3 events identified by means of the Cerenkov counters. The measured momentum-dependent charge asymmetry of the pion background required a correction to the fractional range difference of the muons of typically $(-0.025 \pm 0.005)\%$.

The $\mu^+ - \mu^-$ momentum difference $\delta p_\pm$ was determined for each range interval in either spectrometer by taking the difference of the mean values of the momentum distribution for the two signs of charge. The average value of $\delta p_\pm/p$ from these individual results is 0.28%.

The two sides calculated separately show a difference of 0.067% where 0.045% is expected from the apparent change of the K_L^0 direction with magnet polarity reversal, and the statistical uncertainty on each side is 0.036%. This systematic shift is canceled by averaging the values of $\delta p_\pm$ of the two sides since it corresponds to equal and opposite errors on left and right.

The contribution to the apparent fractional range difference from γ-ray or neutron emission from the nuclear capture of a μ^- has been estimated to be < 0.005% and can be ignored. On the other hand, the photon emission that accompanies the descent of the μ^- through the energy levels of the muonic atom had a considerably larger effect. Essentially all the μ^- stopping in iron were associated with an X-ray of 1.3, 1.5 or 1.7 MeV from this process.

To help evaluate this effect the response of the range telescope counters to low energy electrons was measured. A β-ray spectrometer was constructed to deliver an almost monochromatic beam with a range of energies selected by thin aluminum degraders. The energy scale was calibrated with a total absorption counter. A sample of eight of the counters from the experiment were tested with this beam and their efficiency contours were mapped for the energy loss range of interest. The results of the measurments showed that the counters were sufficiently alike to allow a confident extrapolation to the complete set.

A numerical calculation was made using the Klein-Nishina formula [11] of the transmission through the iron of X-rays from muons stopped in the plates, and of the subsequent release of energy

in the scintillator by the same Compton scattering process. Information from this was folded with the efficiency map of the counters and the distribution of the stopping muons to estimate for each counter the fraction of μ^- whose apparent range was greater than the real range by one counter. The effect of this correction was to reduce the mean fractional range difference by $(0.081 \pm 0.008)\%$.

The $\delta p_\pm$ value for each of the counters was corrected individually. The corrected differences, averaged between the two sides, are plotted as the experimental points in fig. 4A. The statistical uncertainties from the $\delta p_\pm$ measurements, which are dominant, have been added in quadrature to the uncertainties from the systematic corrections to give the errors shown in the figure. The first and last counters of the range telescopes have been ignored because of low statistics.

These $\delta p_\pm$ values have been combined in three groups according to their ranges. In each group a weighted mean of the fractional momentum differences was evaluated and converted into a fractional range difference. The systematic errors, about 30% of the size of the statistical uncertainties, have again been included in quadrature. These results are shown in fig. 4B.

The weighted mean over all the momentum spectrum is $(R_- - R_+)/R = (2.28 \pm 0.20) \times 10^{-3}$ at the average momentum of 800 MeV/c.

A mechanism for such a range difference was apparently first considered by Fermi [12], but has been only briefly mentioned in the literature [13] apart from a recent treatment by Jackson and McCarthy [14]. By applying an expansion of the Mott scattering formula to include

terms in e^6, a difference in the scattering cross-section for $\mu^- e^-$ and $\mu^+ e^-$ was obtained. This results from interference between amplitudes for one and two photon exchange. On integration to obtain an expression for the rate of energy loss, a term ($\pm \pi \alpha \beta$) for $\mu^\pm$ (α is the fine structure constant) appears inside the bracket of eq. (1). The correction is also applicable to other particles slowing in material, and is estimated to represent the sign dependent energy loss difference with an accuracy of a few percent in the energy range of interest here. A separate mechanism probably responsible for the low-energy range discrepancy [5] has also been evaluated [14], but is insignificant at the energies of this experiment. The calculations of Jackson and McCarthy for lead, iron and carbon are shown as theoretical curves in fig. 4B.

A more rigorous comparison with the theory was performed by using a computer program which made use of the Bethe-Bloch formula (1) with the above correction. This simulated the passage of muons through all the layers of material in the apparatus behind the spectrometer spark chambers. The result of this program for each of the range counters is shown in fig. 4A as the theoretical points, which when compared with experiment give a value of $\chi^2 = 7.2$ for 14 degrees of freedom. This is better agreement than is statistically likely. We believe the non-gaussian tails of the muon momentum distributions may have caused an overestimate of the statistical errors on the $\delta p_\pm$ values and so an underestimate of χ^2. We take it as an indication that the errors are conservative.

A further test [15] of the systematic reliability of the measurement was afforded by direct comparison of the observed range-momentum relation with that predicted by the Bethe-Bloch formula. To do this it was necessary to simulate the effect of the muon momentum spectrum in the series of stopping regions, allowing for momentum resolution and the expected range straggling.

The energy-loss stepping program included K and L shell corrections [8], the density effect which contributed a 5% correction to the longest ranges, and the effect of multiple scattering.

The range data were well represented by the predictions of the Bethe-Bloch formula within ±0.3% for fitted values of $I = 79 \pm 7$ eV for graphite and $I = 287 \pm 13$ eV for iron. The largest contribution to the uncertainties came from density and thickness measurements on the materials. For comparison, an average of $I = 83 \pm 3$ eV has been suggested for carbon [16], while a value of $I = 286$ has been recommended for iron [17], although it seems not to have been measured before at high energy where the shell and multiple scattering corrections are not important. The best fit values of the straggling widths are a factor of 1.075 ± 0.03 greater than predicted. This discrepancy is partially caused by non-gaussian straggling and is not considered to be significant.

The corrections to the K_L^0 $\mu 3$ charge asymmetry experiments depend on a knowledge of the muon spectrum, and this can introduce an added uncertainty. For the SLAC experiment [18] the effect of the range difference correction is to change the asymmetry parameter δ_μ from $0.49 \pm 0.16\%$ to $\delta_\mu = 0.58 \pm 0.17\%$ according to ref. 19. A recent Bevatron experiment with a steeper muon spectrum experiences a larger

effect; the experimenters calculate the change to be from $\delta_\mu = 0.21 \pm 0.10\%$ to $\delta_\mu = 0.60 \pm 0.14\%$ [20]. These asymmetry values are consistent with each other but are significantly larger than the published asymmetry measurements in K_L^0 e3 decays averaging $\delta_e = 0.323 \pm 0.029\%$ [21], and a recent preliminary result $\delta_e = 0.278 \pm 0.028\%$ [22]. The electron data are in good agreement with the value $\delta_e = \delta_\mu = 0.28$ from the super-weak theory of CP violation and the $\Delta S = \Delta Q$ rule. By the same token the K_L^0 μ3 data now appear to be in disagreement with this theory.

We wish to thank R. J. Budnitz and R. L. McCarthy, and separately J. D. Jackson and R. L. McCarthy for permission to quote their results before publication. We also wish to acknowledge the efforts of the Bevatron staff and our technicians in the collection of these data.

REFERENCES

1. A. J. Stevens, D. M. Schwartz, C. J. Rush, K. Reibel, T. A. Romanowski, R. L. Sumner, E. C. Swallow, J. M. Watson, R. Winston, and D. M. Wolfe, Nucl. Instr. Meth. 97, (1971) 207.
2. A. Buhler, T. Massam, Th. Muller, and A. Zichichi, Il Nuovo Cimento 35, (1965) 759.
3. For a recent review, see A. Crispin and G. N. Fowler, Rev. Mod. Phys. 42, (1970) 290.
4. E. H. Bellamy, R. Hofstadter, W. L. Lakin, J. Cox, M. L. Perl, W. T. Toner, and T. F. Zipf, Phys. Rev. 164, (1967) 417; A. Crispin and P. J. Hayman, Proc. Phys. Soc. 83, (1964) 1051.
5. H. H. Heckman and P. J. Lindstrom, Phys. Rev. Letters 22, (1969) 871.
6. See H. A. Bethe and J. Ashkin, Experimental Nuclear Physics, Vol. 1 ed. E. Segrè, John Wiley and Sons, New York, (1953).
7. R. M. Sternheimer, Phys. Rev. 145, (1966) 247. See also ref. 3.
8. M. C. Walske, Phys. Rev. 88, (1952) 1283, and Phys. Rev. 101, (1956) 940.
9. A. R. Clark, T. Elioff, R. C. Field, H. J. Frisch, R. P. Johnson, L. T. Kerth, and W. A. Wenzel, Phys. Rev. Letters 26, (1971) 1667.

10. H. J. Frisch, Doctoral Thesis, UCRL-20264, Lawrence Berkeley Laboratory, 1971 (unpublished).

11. Ref. 6, p 319.

12. Quoted in footnote 27 of: W. H. Barkas, W. Birnbaum, and F. M. Smith, Phys. Rev. 101, (1956) 778.

13. G. N. Fowler and A. G. Hall, Proc. Inter. Conf. Cosmic Rays, London 2, (1965) 976.

14. J. D. Jackson and R. L. McCarthy, LBL-742, Lawrence Berkeley Laboratory, May 1972, submitted to Physical Review.

15. R. C. Field, LBL 791, Lawrence Berkeley Laboratory, May 1972 (unpublished).

16. I. M. Vasilevskii and Yu. D. Prokoshkin, Sov. J. Nuc. Phys. 4, (1967) 390.

17. J. E. Turner, Part 6 of Studies in Penetration of Charged Particles in Matter, Report No. 39, Nuclear Science Series, p. 99; National Academy of Sciences, National Research Council Publication 1133, Washington, D.C., 1964.

18. D. Dorfan, J. Enstrom, D. Raymond, M. Schwartz, S. Wojcicki, D. H. Miller, and M. Paciotti, Phys. Rev. Letters 19, (1967) 987.

19. M. A. Paciotti, Doctoral Thesis, UCRL-19446, Lawrence Berkeley Laboratory, Dec. 1969 (unpublished); p. 56.

20. R. L. McCarthy, J.H. Brewer, R. J. Budnitz, A. C. Entis, R. M. Graven, D. H. Miller, and W. N. Ross, LBL-702, May 1972, submitted to Phys. Rev; R. L. McCarthy, Doctoral Thesis, LBL-550, Lawrence Berkeley Laboratory, Nov. 1971 (unpublished).

21. S. Bennett, D. Nygren, H. Saal, J. Steinberger, and J. Sunderland, Phys. Rev. Letters 19, (1967) 993; also H. Saal, Doctoral Thesis, Columbia University, New York (1969).
J. Marx, D. Nygren, J. Peoples, T. Kirk, and J. Steinberger, Phys. Letters 32B, (1970) 219.
V. A. Ashford, B. C. Brown, G. E. Masek, T. Maung, E. S. Miller, H. Ruderman, D. J. Shields, and W. Vernon, Phys. Letters 38B (1972) 47.

22. V. Fitch, V. Hepp, D. Jensen, M. Strovink, R. Webb, and V. Bearg. Invited paper, Meeting of American Physical Society, Cambridge, Mass., Dec. 1971.

FIGURE CAPTIONS

Fig. 1. Plan view of apparatus. F and R are banks of vertical hodoscope counters, H is a six counter horizontal array and T is a fast timing counter.

Fig 2. Elevation view of Cerenkov counter and range telescope.

Fig. 3. Incident momentum distribution of positive and negative particles stopping in range interval 11 of the left telescope.

Fig. 4(a). Difference in incident momenta of positive and negative muons for range intervals 2 to 16 (left and right sides averaged). The theoretical calculations are described in the text.

Fig. 4(b). Fractional range differences of negative and positive muons for three subsets of the range intervals compared with the computations of Jackson and McCarthy.

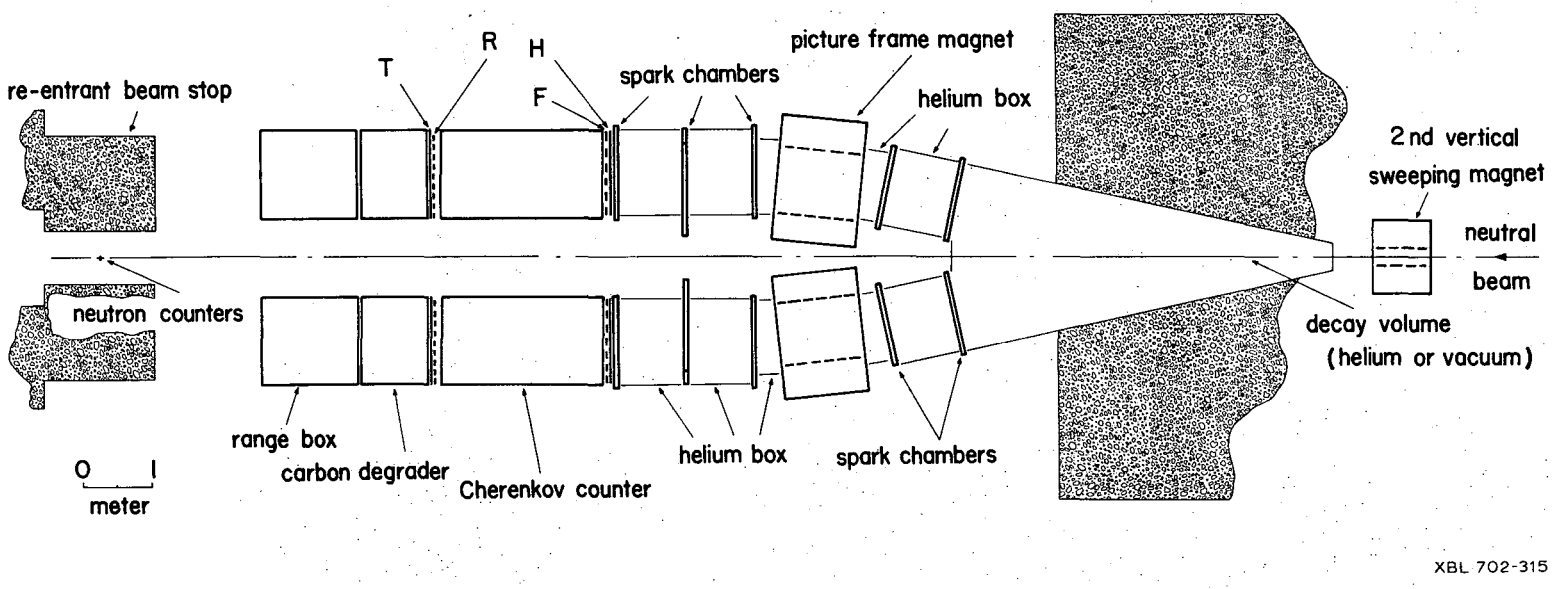
re-entrant beam stop
T
R
H
F
spark chambers
picture frame magnet
helium box
2nd vertical
sweeping magnet
neutral
beam
neutron counters
decay volume
(helium or vacuum)
range box
carbon degrader
Cherenkov counter
helium box
spark chambers
0 1
meter
XBL 702-315

Fig. 1

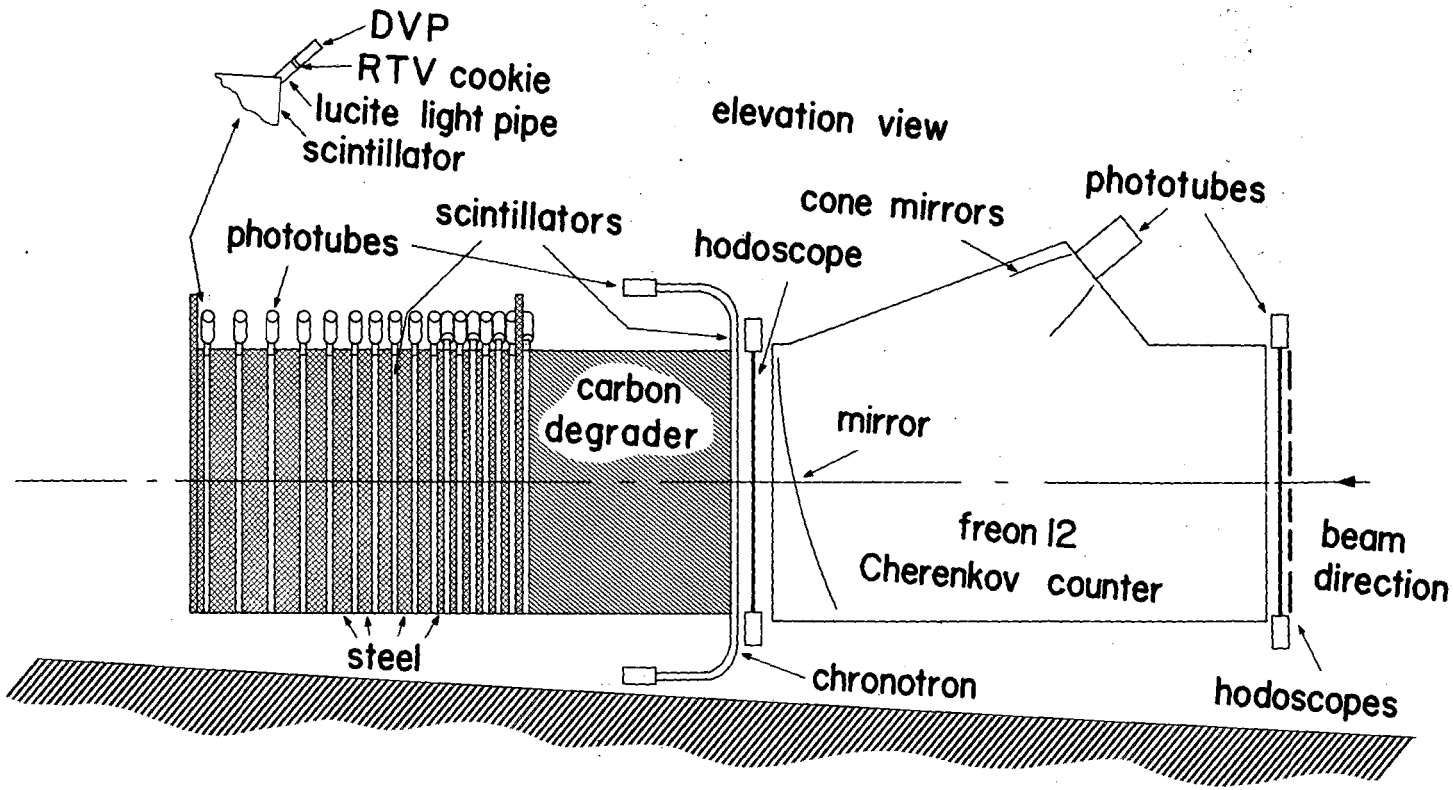

XBL 702-316

Fig. 2

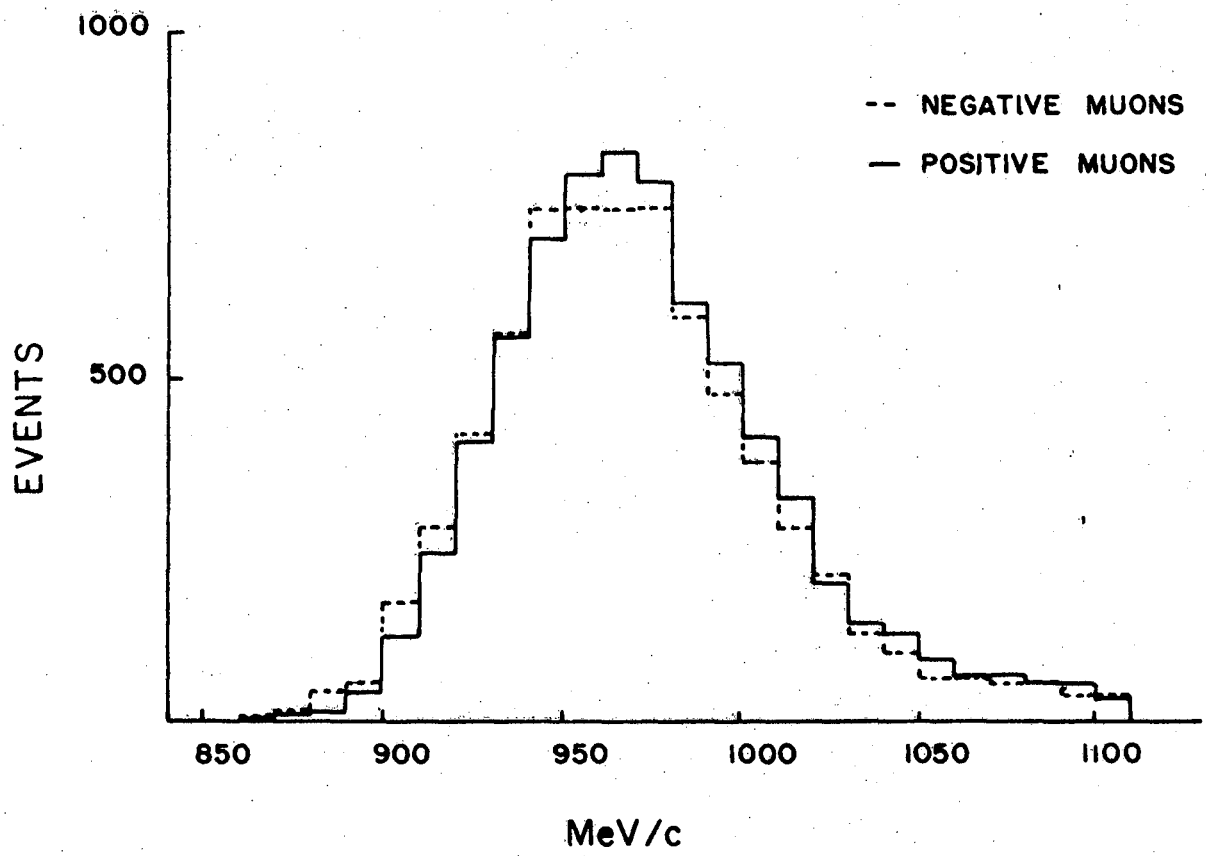

XBL 724-672

Fig. 3.

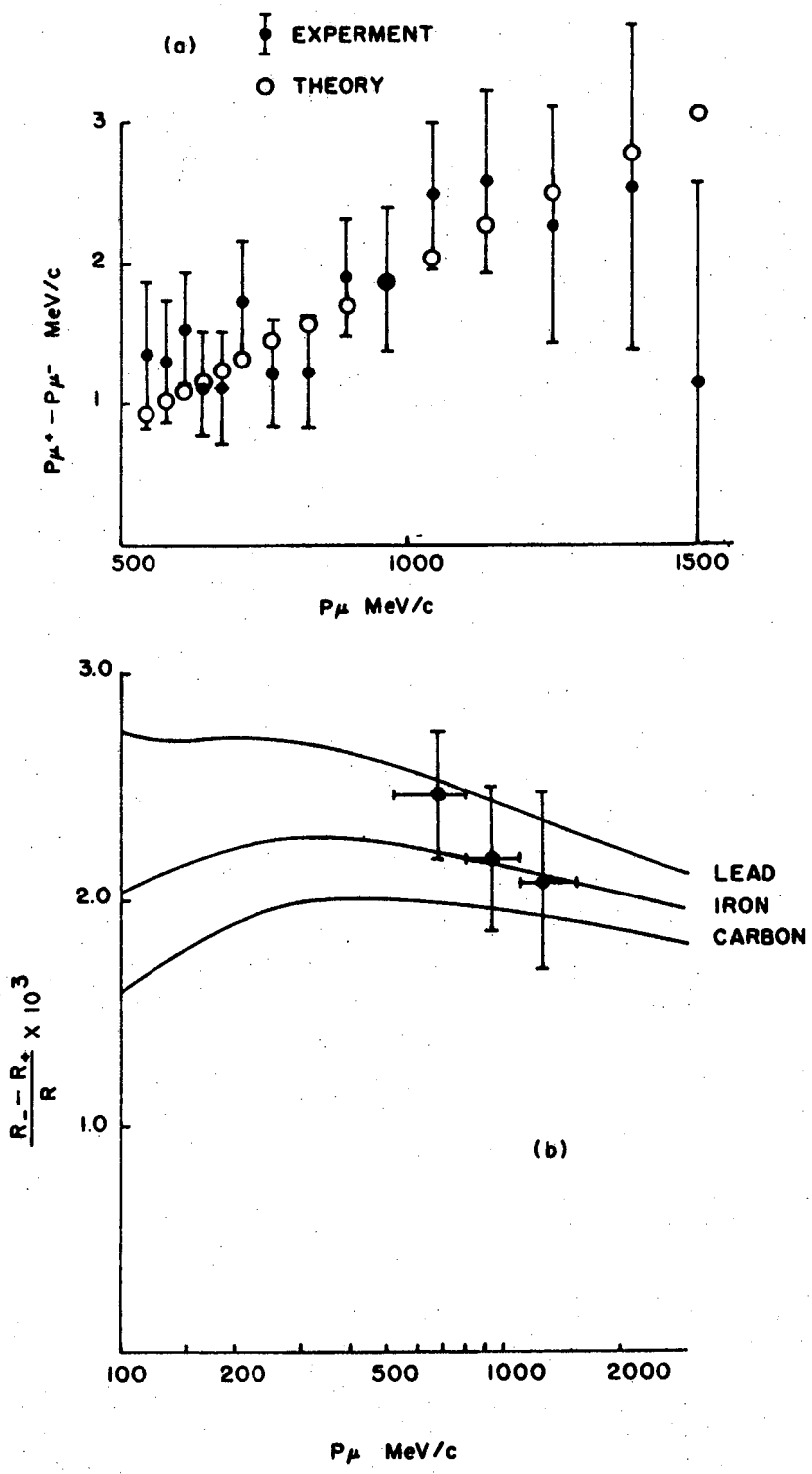

Fig. 4. XBL 724-671

LEGAL NOTICE

This report was prepared as an account of work sponsored by the United States Government. Neither the United States nor the United States Atomic Energy Commission, nor any of their employees, nor any of their contractors, subcontractors, or their employees, makes any warranty, express or implied, or assumes any legal liability or responsibility for the accuracy, completeness or usefulness of any information, apparatus, product or process disclosed, or represents that its use would not infringe privately owned rights.

TECHNICAL INFORMATION DIVISION
LAWRENCE BERKELEY LABORATORY
UNIVERSITY OF CALIFORNIA
BERKELEY, CALIFORNIA 94720