LBL-9307 c.2
UC-95d
EEB-W-79-10

Lawrence Berkeley Laboratory
UNIVERSITY OF CALIFORNIA

ENERGY & ENVIRONMENT DIVISION

RECEIVED
LAWRENCE
BERKELEY LABORATORY

MAR 14 1980

LIBRARY AND
DOCUMENTS SECTION

AN ENERGY EFFICIENT WINDOW SYSTEM
FINAL REPORT

Suntek Research Associates

August 1977

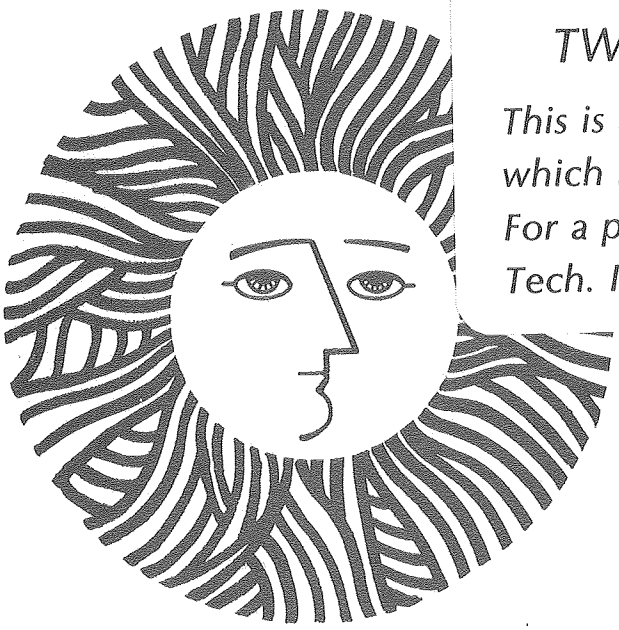

TWO-WEEK LOAN COPY

This is a Library Circulating Copy which may be borrowed for two weeks. For a personal retention copy, call Tech. Info. Division, Ext. 6782.

LBL 9307 c.2

Prepared for the U. S. Department of Energy
under Contract W-7405-ENG-48

DISCLAIMER

This document was prepared as an account of work sponsored by the United States Government. While this document is believed to contain correct information, neither the United States Government nor any agency thereof, nor the Regents of the University of California, nor any of their employees, makes any warranty, express or implied, or assumes any legal responsibility for the accuracy, completeness, or usefulness of any information, apparatus, product, or process disclosed, or represents that its use would not infringe privately owned rights. Reference herein to any specific commercial product, process, or service by its trade name, trademark, manufacturer, or otherwise, does not necessarily constitute or imply its endorsement, recommendation, or favoring by the United States Government or any agency thereof, or the Regents of the University of California. The views and opinions of authors expressed herein do not necessarily state or reflect those of the United States Government or any agency thereof or the Regents of the University of California.

AN ENERGY EFFICIENT WINDOW SYSTEM

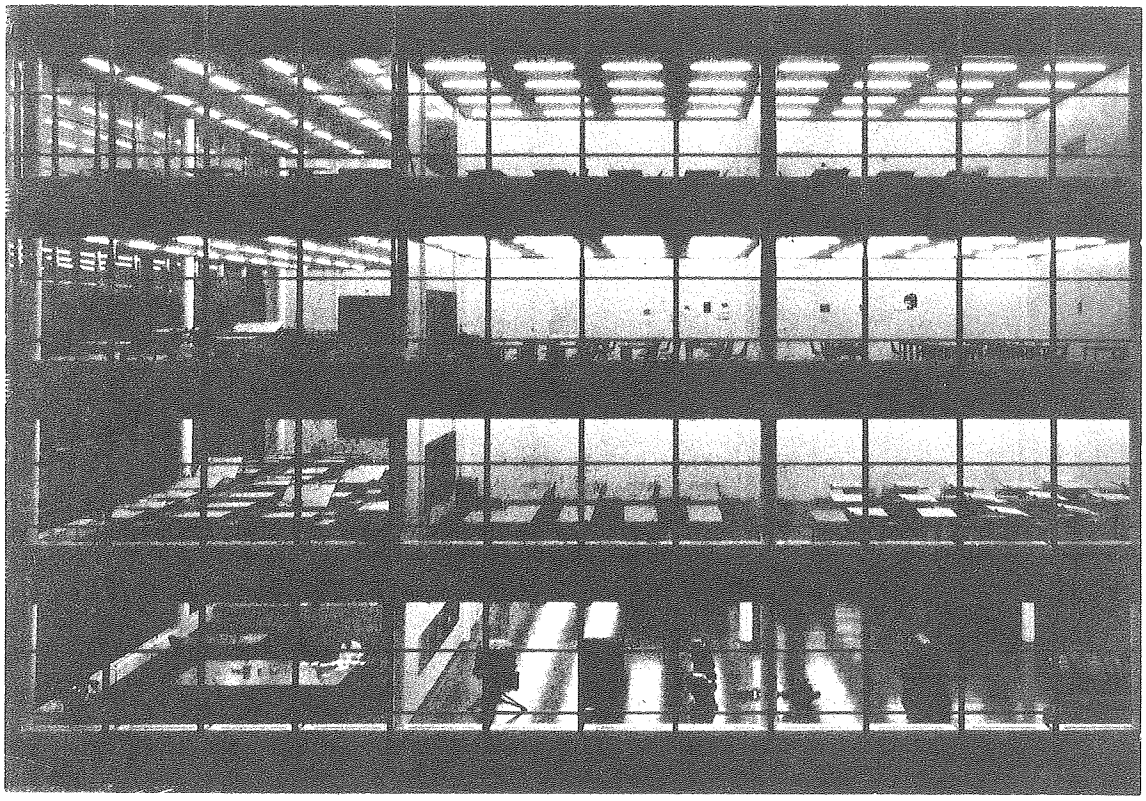

FINAL REPORT

AUGUST 1977

SUNTEK RESEARCH ASSOCIATES

AN ENERGY EFFICIENT

WINDOW SYSTEM

FINAL REPORT

AUGUST 1977

submitted to

Windows and Lighting Program

Energy and Environment Division

Lawrence Berkeley Laboratory

for

Consumer Products and Technology Branch

Division of Buildings and Community Systems

United States Department of Energy

Suntek Research Associates

500 Tamal Vista Boulevard

Corte Madera, California 94925

THE WORK DESCRIBED IN THIS REPORT WAS FUNDED BY THE DEPARTMENT OF ENERGY, OFFICE OF ASSISTANT SECRETARY FOR CONSERVATION AND SOLAR APPLICATIONS, DIVISION OF BUILDINGS AND COMMUNITY SYSTEMS.

AN ENERGY EFFICIENT WINDOW SYSTEM

CONTENTS I

EXECUTIVE SUMMARY 1

INTRODUCTION 5

1.0 SUPERPANE DESIGN STUDIES 11

1.1 Preproduction Prototype 11

1.2 Specification Development 15
- 1.2.1 Installation Parameters 16
- 1.2.2 Architectural Parameters 19
- 1.2.3 Technical Parameters 20
- 1.2.4 Thermal Comfort 22
- 1.2.5 Economic and Market Considerations 24
- 1.2.6 Design Specifications 25

1.3 Superpane System Designs 26
- 1.3.1 Design Morphology 26
- 1.3.2 Permanent Superpane Retrofit 30
- 1.3.3 Interchangeable Retrofit 31
- 1.3.4 Rigid Designs 32
- 1.3.5 Direct Lamination 32
- 1.3.6 Physical Properties of Component Materials 34

2.0 HEAT MIRROR PRODUCTION SIMULATION 38

2.1 Optical Theory and Computer Optical Design 40
- 2.1.1 Theory of Visible Optics 40

CONTENTS continued

2.2 Vacuum Deposition Technology 45

2.2.1 Electron Beam Deposition 45

2.2.2 Sputtering 46

2.2.3 Thermal Evaporation 48

2.2.4 Reactive Thermal Evaporation 48

2.2.5 Production of Suntek Heat Mirror 49

2.3 Production Simulation 51

2.3.1 Vacuum Chamber 51

2.3.2 Optical Monitor 53

2.3.3 Web Handling System 56

2.4 Test Procedures and Results 56

2.4.1 Electrical Conductivity 56

2.4.2 Hemispherical Emissivity 57

2.4.3 Solar Transmission 57

2.4.4 Transmission as a Function of Emissivity 59

2.4.5 Thermal Resistance 60

2.4.6 Abrasion Testing 61

2.4.7 Corrosion Tests 61

2.5 Production Evaluation 63

3.0 OPTICAL SHUTTER PRODUCTION STUDIES AND TEST PROGRAM SIMULATION 66

3.1 Thermodynamic Theory 67

3.2 Production Simulation 67

3.3 Test Procedures and Results 72

3.3.1 Optical Tests 72

3.3.2 Thermal Tests 75

3.3.3 Cycle Life 76

CONTENTS continued

3.4 Production Evaluation 79

4.0 SUPERPANE 81

4.1 Superpane Test Program and Results 81
- 4.1.1 Thermal Tests 81
- 4.1.2 Optical Tests 87
- 4.1.3 Mechanical Tests 88
- 4.1.4 Accelerated Aging Tests 89

4.2 Production Evaluation of Retrofit Designs 89

5.0 COMMERCIALIZATION PLANS 94

5.1 The Energy Conservation Market 94
- 5.1.1 Market Size and Distribution 94
- 5.1.2 Economic Considerations 96
- 5.1.3 Payback Periods 97
- 5.1.4 Life Cycle Costing 98
- 5.1.5 Consumer Attitudes 100

5.2 Market Entry 102
- 5.2.1 Markets 102
- 5.2.2 Distribution Channels 103
- 5.2.3 Education and Promotion 107
- 5.2.4 Required Organizational Capabilities 111

5.3 Commercialization Summary 113

APPENDIX A - INSTRUMENTATION AND TEST PROCEDURES 114
- 1. Thermal Resistance 115
- 2. Optical Shutter Thermoptical Properties 121
- 3. Optical Shutter Cycle Test 123

CONTENTS continued

APPENDIX A continued

4. Solar Energy Transmission 125

5. Visible Transmission Spectrum 125

6. Emissivity 125

7. Infrared Reflection-Transmission Spectrum 128

APPENDIX B - FLAT PLATE GLASS CONSUMPTION AND WINDOW INSTALLATION DATA 129

Executive Summary

The purpose of this program was development of commercial production plans for a practical and cost effective energy conserving retrofit system for windows based on Suntek's prototype Superpane retrofit window. The original Superpane configuration consisted of a transparent insulation know as Heat Mirror to reduce radiative heat loss, a thermally sensitive optical shutter known as Cloud-gel to reduce summer heat gain, and a contained air space to reduce convection, all related to the prime window by an appropriate edge detail.

Primary tasks which were defined to achieve this purpose were:

Production simulation, optimization and testing of Suntek Heat Mirror.

Production simulation, testing and development of scaled up procedures and machinery specifications for Suntek Cloud-gel.

Optimization of the integrated Superpane package including edge detail, adhesion, assembly and testing.

Commercialization planning including market research, cost analysis and product forms.

Major results of this program have been to conclusively establish the commercial feasibility of an innovative, cost-effective energy conserving retrofit system for windows, to demonstrate a significant advance in transparent insulation technology and to characterize the market for retrofit window insulation systems. More specifically this program has led to the following results and conclusions:

1. Heat Mirror - Suntek's proprietary heat mirror process has been successfully production simulated. Heat Mirror consists of a multilayer coating incorporating an anti-reflection layer. Suntek's process, produced by magnetically enhanced sputtering, has proven to be stable, controllable and reproducible. Films with low emissivities and low transmission losses have been consistently produced. Heat Mirror on plastic substrates

possesses the inherent advantage (over glass) of suitability for continuous flow production and use of inexpensive substrates and hence, offers significantly lower cost and greater suitability for window retrofit. The demonstrated Suntek technology will support a roll goods selling price of 50¢ per square foot with prospective reduction if contemplated technological enhancements prove effective. Film resistance to abrasion and corrosion appear only modest; hence application in semiprotected environment is indicated pending further testing and improvement of anti-abrasion and anti-corrosion properties.

2. Cloud Gel - Suntek's proprietary optical shutter was found to demonstrate a thermally sensitive transmission change from more than 90% to less than 20%, a suitably sharp transition characteristic and excellent cycle life and optical characteristics. Production cost studies carried out with the assistance of a major U.S. polymer company established that incorporation of Cloud-gel into Superpane would add about $2.70 per square foot to the end user price which was judged unacceptable. Incompatability with custom sizing, high weight (3.66 lbs per square foot) and questionable acceptability of view blanking by consumers together with high cost led to the decision to withdraw the Cloud-gel optical shutter from the Superpane window system. Cloud-gel represents a unique technical advance in variable transmission media with prospective application with lower cost plastic packaging to skylights, greenhouses, passive solar heating and other non-viewing applications despite its unsuitability for window retrofit.

3. Superpane The original Suntek Superpane retrofit window was redefined to exclude the optical shutter and the redefined system was subjected to extensive testing and evaluation. Superpane applied to a single glazed prime window has a U value of 0.38 BTU/hr/sq ft/°F compared to 0.58 for a double glazed

window with a ½" air gap or 1.13 for a single glazed 1/16" window. Feasible edge detail designs and attachment systems (both permanent and removable) were established. Production cost studies indicated that custom sized standard Superpane retrofits could be delivered to the consumer for about $2.00 per square foot. Assuming a four year payback was required (a more severe requirement than life cycle costing), Superpane was found to be cost effective in regions possessing more than 4200 heating degree days (roughly, north of Washington, D.C., Louisville, St. Louis, Amarillo, Las Vegas, Eureka) based on an estimated 1980 fuel oil price of 61¢/gallon. Direct lamination of Heat Mirror to the existing single glazed prime window was also considered as an alternative to Superpane. The less favorable U value of 0.56 of the direct configuration is offset by a lower estimated selling price to the consumer of $1.35 per sq. ft. so that cost-effectiveness is equivalent to Superpane. The direct configuration appears esthetically superior to Superpane but is more susceptable to corrosion and abrasion.

4. Commercialization - The annual market potential for retrofit transparent insulation was estimated as 600 million sq. ft. per year. The extent and rate of penetration of this market (which is historically dominated by storm windows) by innovative, low cost systems such as Superpane will depend upon:

   Achievement of payback periods under four years.
   Availability of convenient financing mechanisms.
   Building code insulation requirements.
   Regional climatic considerations.
   Consumer perceived energy crisis credibility.
   Fuel cost.
   Effective promotion and education.
   Esthetic and psychological acceptability.

The window market was found to be many segmented, requiring a number of multi-tier distribution channels. The required organizational attributes for manufacturing (high technology, non-labor intensive, moderately capital intensive and location-independent) and marketing (distribution, promotion, conversion, product design, image and market research) were established. Three different commercialization strategies were judged feasible - large building products company, specialized window products company or new, dedicated company. All three are being explored.

With successful completion of further work on abrasion and corrosion currently in progress and consumation of a selected commercialization arrangement, this program should lead to the availability to U.S. consumers of an innovative, cost-effective energy conserving system for windows within the next 1 -2 years.

INTRODUCTION

On a nation wide basis space conditioning loads due to windows consume 1.7 million barrels of oil per day or about 5% of the national energy budget. If the oil consumed by a building in one year were spread over its surfaces in proportion to the energy lost through them, then, discounting infiltration or heating system losses, the walls would be covered by a layer of oil 1.2 inches thick, and the windows by a layer 10.5 inches thick. The relatively small area of windows (typically 300 - 400 square feet in a 1500 sq.ft. single family residence) makes them prime targets for energy conservation measures. To be effective on a national scale in the near term, any new window technology developed must be applicable to the existing building stock of 68 million residential units as well as to the 1.8 million new units constructed annually. Because window sizes vary widely this requirement places a premium on the adaptability of any retrofit design.

Windows lose heat by two heat transfer mechanisms. Radiative transfer at infrared wavelengths accounts for roughly two-thirds of the flow. The second path of escape is convective warming of the pane by air currents. Air currents can only be suppressed by dead air spaces, but radiation can be effectively suppressed by a suitable reflecting filter in the infrared spectrum. This material reflects infrared room radiation back into the architectural space and thereby reduces heat losses by this mechanism.

Our purpose in the work reported here was to develop and test a transparent heat reflective coating called "Heat Mirror", as well as investigate ways of controlling solar heat gain. We have been successful in developing the heat reflector to the pre-production stage. The device performs as we had hoped; it cuts down overall heat loss through a single pane window by a significant factor. Solar gain is not greatly inhibited, nor is vision through the window impaired. The production feasibility study has been a success, but further work is in progress

to reduce costs and to improve the abrasion and corrosion resistance of Heat Mirror.

The thermally responsive solar control layer, called Optical Shutter, was likewise investigated for its producibility and marketability. The results indicate that a need and desire for such a device exists, but that our material did not warrant further pursuit in a retrofit application. After much recalculation, and computation of both a technical and financial nature, we dedided to modify the basic invention, called Superpane, to exclude the Optical Shutter.

Superpane, a window retrofit based on the combination of a Heat Mirror and a dead air space was found to be a viable concept from the viewpoints of technical performance, manufacturing costs, and marketability.

This report is organized into five major section each of which reflects a major task area:

Section 1: Energy conserving retrofit window design studies.

Section 2: Heat Mirror production and simulation evaluation.

Section 3: Optical Shutter production studies and evaluation of test results.

Section 4: Superpane test program and results.

Section 5: Commercialization Plan.

Section 1 itemizes the design constraints placed on internal retrofit windows from which a set of design specifications are derived. These parameters are used to structure a design decision morphology from which 5 different designs, judged capable of meeting 80% of the market requirements are developed. The standard Superpane design, consisting of a 3 mil polyester film stretched across a 3/8 inch hollow transparent

P.V.C. frame with the Heat Mirror surface towards an air gap, (see fig.1-1) was subjected to a series of optical, thermal and mechanical tests. The results of these tests are described.

Major Conclusions are:

1. The standard Superpane has a U-Value of 0.35 (winter conditions) when installed on a single pane window.
2. Solar transmission through the retrofit unit is 74.5%.
3. The adhesion of the unit to the window glass is unaffected by thermal expansion and contraction over extended exposure to U.V. light when properly installed.
4. Condensation can be controlled by the use of dessicants.
5. The standard Superpane retrofit saves 18,720 BTU/ft^2 per 1000 Degree Day or 12¢ per ft^2 per 1000 Degree Days at projected 1980 fuel prices of 61¢ gal. for No. 2 heating oil.
6. The unit can be retailed for \$2.00/ft^2 and pays for itself in under four years in a 4,500 DD climate.
7. This payback period is reduced by 30% if advantage is taken of the higher effective temperatures resulting from the installation of Superpane.
8. The product life is projected to be 7 years or more.
9. If all windows in the country were retrofitted with transparent selective surfaces national energy consumption would be reduced by 3%.

Section 2. The physical theory of transparent selective surfaces is presented together with an interactive computer program for optimizing surface coatings. The state of the art of vacuum deposition technology is reviewed and various vacuum deposition techniques for the production of transparent selective surfaces evaluated. The production simulation machine used by Suntek is described and test data on the optical and thermal properties of the Heat Mirror coatings produced are presented. The section concludes with an account of production rates and costs.

Major conclusions are:

Heat Mirror coating can be vacuum deposited on polyester films.

These coatings have an average emissivity of 0.14 and a solar transmission of 91%.

Production rate of 9 inches per minute can be sustained with excellent reproducibility.

Heat Mirrors on polyester can be produced in quantity for a cost of $0.50 per square foot.

Heat Mirror films can be manufactured that are optically neutral; color biased and irridescent films can also be fabricated.

A web coater costing $735,000 could produce 1 million sq. ft. per year of Heat Mirror at a roll good selling price of 50¢ per square foot.

Section 3 opens with a discussion of the physical theory of thermochemical optical shutters followed by an account of work done to tailor the physical properties of the gel to conform with the production requirements. A limited prototype production run was undertaken in house and the architectural size samples produced were used to test thermal, optical and life cycle performance. The results of these tests are given. The section also presents the results of a large scale production feasibility study and ends with an evaluation of the optical shutter in terms of its application to user installed retrofit windows .

Major conclusions are:

- Performance of the optical shutter is adequate.
- Producibility is uneconomic where good optical imaging necessitating a glass sandwich is required, as in windows, both because of cost ($2.20 - $3.00/sq.ft.) and incompatibility with custom sizing.
- The material can be economically manufactured using a plastic sandwich for energy conservation in skylights, greenhouses and passive solar heaters, where optical imaging is not required.

Section 4 - The Superpane configuration consisting of Heat Mirror separated from the prime glazing by an appropriate airgap has been subjected to extensive testing which is reported in this section. Cost estimates for Superpane elements and assemblies are also included.

Section 5 - The window market is segmented by geographical area, building type and new construction versus replacement. The economic considerations effecting purchase such as maxium payback period, life cycle cost, availibility, financing and tax credits are itemized. The energy and fuel cost savings of installing the retrofit unit are estimated for a number of cities spread across the U.S.A. The results of an analysis of the distribution structure of the glass industry are presented together with associated transfer prices. Finally, commercialization plans that maximize the rate of market penetration are presented. Major conclusions of the commercialization section are:

- A window market potential of 600 million square feet per year of transparent insulation exists resulting in potential sales of $500 million to $1.5 billion, depending on product configuration mix. This potential market would be the estimated industry level reached following achievement of steady state sales.
- Secondary markets for transparent insulation have been identified in the greenhouse and solar collector fields.
- Extent and rate of penetration of the potential market will depend on:
  - Payback periods under four years
  - Convenient financing mechanisms
  - Building code insulation requirements
  - Regional climatic considerations
  - Consumer perceived energy crisis crediblility
  - Effective promotion and education
  - Enhanced esthetic and psychological appeal
- Window market is many-segmented, requiring a number of multi-tier distribution channels.

- Products costs to the consumer will range from $1.35 to $2.50 per square foot, depending on product configuration and installation responsibility, fulfilling the payback requirement in areas experiencing 4,200 DD of heating or more.
- Appropriate manufacturing and marketing attributes are required.
- "Partnership" with a major building products company, with a specialized window products company or establishing a new dedicated company appear to represent viable strategies which are being explored.

1.0 SUPERPANE DESIGN STUDIES

1.1 PREPRODUCTION PROTOTYPE

The original internal energy conserving window retrofit design which served as the starting point for the production simulation, engineering analysis, and market study is shown in Figure 1-1.

The retrofit consists of four main components:

A. A double glass pane that contains a thermoactive gel which turns from 92% transparent to solar radiation in its clear state to 80% opaque white reflective when heated above a preset temperature point, usually 80°F.

B. A transparent selective surface on a plastic substrate with an emmissivity of 0.15 that transmits sunlight (0.3 to 2.5 microns) but reflects long infrared radiation (4 to 40 microns).

C. An air gap for the suppression of convective and conductive heat transfer.

D. An edge detail for adhering the retrofit unit to the existing window glass.

The solar modulator consists of a thermoactive chemical gel sandwiched between two sealed panes of clear 1/16 inch low iron glass. The function of the solar modulator material, trade named 'Optical Shutter', is to prevent room overheating and so reduce air-conditioning loads by cutting back the solar heat gain through a window by 80% when the internal room temperature rises 5°F above a predetermined value. If the room temperature is lower than this set point the Optical Shutter remains clear. In a sense it acts as a distributed thermostat that switches the fenestration system from transparent to reflective when the heat balance of the building moves above the human comfort zone. It does this only as required and on a room by room basis.

FIG. 1-1. CROSS-SECTION OF INSTALLED SUPERPANE

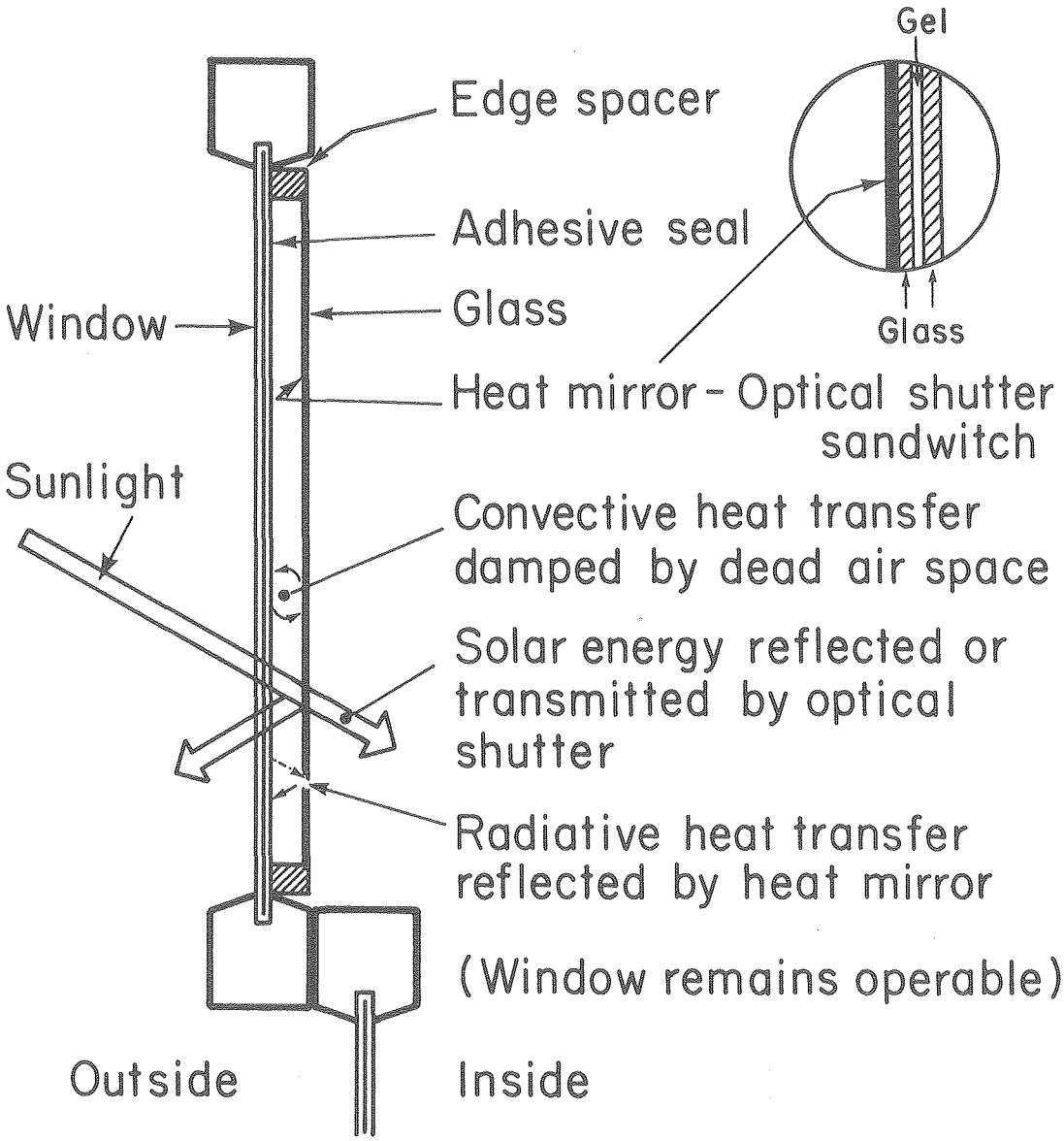

XBL799-2680

The transparent selective surface, trade named 'Heat Mirror' is made by depositing several very thin layers on to a 3 mil polyester film.

The function of the Heat Mirror is to transmit short wave radiation in the solar waveband but reflect long wave infrared radiation. It suppresses radiative heat loss through the window from the room interior in the winter and radiative heat gain from the outside in the summer. Typically 65% of the heat lost through a window in winter is in the form of infrared radiation centered around 10 microns. It can be regarded as a band pass filter controlling radiative exchanges through a building fenestration.

The Heat Mirror is glued to the glass of the Optical Shutter unit by a wet mount polyvinyl acetate (PVA) based optical adhesive and is installed so as to face the air gap created and sealed by the edge detail which acts as a spacer.

The 3/8 inch air gap reduces convective losses by placing a dead air space between the inner and outer surfaces of the retrofitted window. The air space is hermetically sealed and a dessicant added to prevent condensation build up.

The combination of an air-gap and a low emmisivity surface of 0.15 reduces thermal transmission through a single pane window from 1.13 BTU ft^{-2} F^{-1} hr^{-1} to 0.35 BTU ft^{-2} F^{-1} hr^{-1}. The Superpane is designed as an internal window retrofit that can be glued to existing windows by home owners or professionally installed.

The purpose of the work undertaken was:

1. To evaluate the production feasibility and costs of the proposed retrofit unit on a component basis.
2. To test the thermal and operational performance of the retrofit unit.

3. To investigate the market potential and compatability of the unit with existing marketing, distribution and service structures in the window market.

As reported later the results of these studies strongly impacted the design of the retrofit unit. The most sensitive parameters proved to be production costs, compatability with distribution structures and the requirements of the do-it-yourself market. The following sections detail the results of these investigations.

1.2 SPECIFICATIONS DEVELOPMENT

In designing retrofit window systems for energy conservation four factors dominate design;

1. The wide variety of existing window types and sizes, together with the variations in climates and building types.
2. Architectural considerations, such as daylighting, view, decor, ventilation, screening, security and cleaning.
3. Technical considerations, such as condensation control, thermal expansion and contraction, U.V. degradation, corrosive attack, abrasion, impact and fire resistance.
4. Economic considerations such as cost/benefits, ease of production, compatibility with existing distribution and service infrastructures and ease of installation either by home owners or by professional installers.

Market analysis and user requirements surveys made it obvious to us that no one single retrofit window design would be capable of meeting all these requirements economically and effectively. To put the case at its most extreme, an apartment renter in Cleveland concerned with reducing his heating bill during winter months has a different concern than a building manager renting office space on a lease that includes heating and cooling to lawyers and other professionals in Washington D.C.

Consequently, while concentrating on a user installed retrofit design capable of meeting the needs of the largest market segment; home owners concerned with reducing their heating bills, we also developed designs to meet these other situations. In short our overall concern was to develop a window retrofit technology capable of meeting the requirements of perhaps 80% of the market while our immediate concern was to develop a low cost thermally effective, mass-producible retrofit window package that could be installed by

home owners themselves. This approach resulted in the development of five different retrofit window designs (see Figure 1-6) each of which addresses a different market segmented need. Central to these designs is Suntek's advanced do-it-yourself retrofit window system trade named Superpane and designed for home-owners who want to reduce their heating or cooling bills.

1.2.1 Installation Parameters

Any window retrofit design has to be adaptable to a wide variety of installation parameters. These include:

1. Window Pane Sizes. The widest range of pane sizes in a single buildings are generally found in the residential sector. Here pane sizes may vary from 'antique' windows made up of small panes measuring four by six inches to picture windows measuring some six by ten feet or more. However, most homes have some degree of standardization in their fenestration and there is often some local uniformity in window design in that the framing has been supplied by a local manufacturer or a series of homes have been constructed by the same contractor. Some degree of standardization is especially noticeable in low and middle income urban and suburban areas.

Windows made up of small multiple panes are best dealt with either by cutting the transparent selective surface film (see Section 2 of Heat Mirror) to size and adhering it directly to the glass or by attaching the internal retrofit frame to the sill and side members and spanning the heat reflective film across the window as a whole. The latter approach is thermally more effective since it includes a dead air space but may be unacceptable for aesthetic or operational reasons. Large areas of glazing with dimensions larger than 4 ft. by 6 ft. require additional interior cross members to maintain the structural integrity of the film. However, since these members can be transparent, they are visually unobtrusive.

2. Window Types. Another intrinsic contextual parameter placed upon retrofit window systems is their compatibility with different window types. Residential window types vary considerably. Generally they can be classified as either sliding or hinged. The most common type is the double hung sash window that opens at top and bottom. Side hinged windows are also common. Top and bottom hinged and centrally pivoted windows are less usual. Fixed windows are most often found in commercial buildings. These, of course, present no special problem.

Sliding windows place the strongest constraint on pane-mounted retrofits. We found that a spacing of three-eights inch is functionally optimal. The effect of the reduced spacing on heat flow was only a 10% higher heat loss than that for a thermally optimal spacing of 5/8 inch given a 40°F temperature difference between interior and exterior and a 12 mph wind, and allowed the retrofit package to be permanently installed in most window types without interfering with their ventilation function.

3. Window Framing Materials. A second variable impacting retrofit window design are the materials used in window framing. These tend to be a function of building type and age. For example, older residences tend to have double hung painted wood frame sash whereas more modern homes tend to have aluminum panel windows. On the other hand, nearly all commercial building have metal frames.

The variety in base framing materials is further compounded by their state of repair, surface finish and molding profile. This makes it extremely difficult to design a retrofit edge detail capable of performing in all these material contexts. The design options were:

1) To attach the retrofit directly to the glass.
2) To attach the retrofit to the window pane frames.
3) To attach the retrofit to the outer frame.

Fig. 1-2. Common Types Of Windows

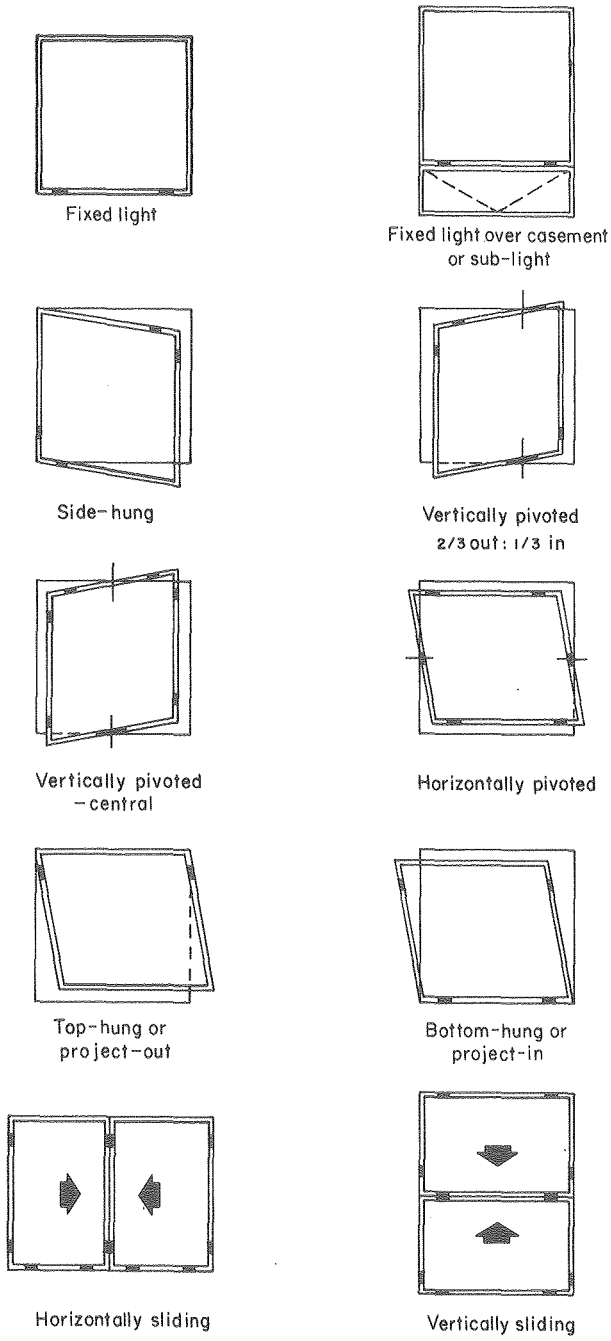

XBL 799-2679

The advantage of option (3) is that the window retrofit unit effectively weatherstrips the window as well as insulates it. Furthermore, since any leakage would be to the outside, condensation would not be a problem. Finally, light transmittance is not reduced by the edging detail.

The disadvantages are that the window ceases to be operable for ventilation control, the difficulty of ensuring security of installation given the wide variety both in dimensions and of window frame materials, and interference with window latches and locks. The second option, attaching the retrofit frame to the pane frames suffers from the same disadvantages as attaching it to the outer frame with the exception that ventilation is not interfered with.

The third option, attaching the retrofit pane directly to the glass, has the major advantage of providing a standardized installation surface regardless of window type or framing materials. While excessive infiltration would have to be controlled by separate weatherstripping, ventilation control is not hindered since the window will remain operable. The standardization of the installation makes possible the design and mass production of a standard retrofit edging detail. In this design, the Heat Mirror is protected in a sealed environment, so the expected lifetime of the system is greater.

1.2.2 Architectural Parameters

Windows are an integral part of the architecture of a building and any retrofit design has to take this into account. The main architectural requirements are compatability with:

1. View
2. Daylighting
3. Thermal Resistance
4. Solar Gain
5. Insect Screening

6. Security
7. Privacy and Glare Control
8. Decor

The preservation of view requires optical neutrality i.e. a faithful rendition of color values and an absence of lensing effects or graininess. Daylighting requires high transmission of the visible spectrum (0.4μ to 0.7μ) while winter solar heat gain requires high solar transmission (0.4μ to 2.0μ). Insect screening and ventilation require no interference with these aspects of windows. Privacy - no interference with drapes, blinds, screens or alarm systems. The retrofit must not intrude or clash with whatever the existing decor happens to be and should preferably "disappear" once installed.

1.2.3 Technical Parameters

Retrofit windows have to function in a fairly complex operational environment in which they are subject to mechanical and thermal stresses, vapor and air pressure differentials, u.v. bombardment, atmospheric corrosion and periodic cleaning.

Specific stress factors that have to be dealt with include:

1. Different thermal expansion and contraction between the materials used in the retrofit frame and between this frame as a whole and the glass it is adhered to. Figure 1-3 shows the physical properties of materials commonly found in fenestration systems.
2. Thermal expansion and contraction of the air-mass contained in the dead air-space between the Heat Mirror and the window pane. This is typically 0.5 ft^3 for a 3'x4' window with a ½ inch air gap. The volume change can be as much as 15% on a seasonal basis.
3. Thermal contraction and expansion of the Heat Mirror substrate. It should be noted that these various thermal effects act in conjunction.

4. Vapor pressure differentials between room air and the enclosed air mass.
5. Condensate build up in the enclosed air space.
6. Ultraviolet degradation of the polyester film and the adhesive interface between the retrofit frame and existing glass pane.
7. Atmospheric corrosion of the Heat Mirror surface.
8. Resistance to Ozone and fungal attack.
9. Abrasion caused during cleaning.
10. Impact resistance of the room facing glazing surface.
11. Fire resistance.

Figure 1-3

PROPERTIES OF COMMON WINDOW FRAMING MATERIALS

Material	Linear expansion coefficient (/degC)	Modulus of elasticity (MN/m^2)	Thermal conductivity (W/mdegC)
	$x10^{-6}$	$x\ 10^4$	
Wood, along grain	3-5	1.0-1.6	
across grain	35-60	0.04-0.2	0.09-0.18
Steel	11-12	21	48
Aluminum	23-25	6.8-7.2	197-201
Polyvinyl Chloride	55-70	0.3	0.13-0.29
Glass-reinforced polyester	18	1.4	0.29
Glass	8-10	5-8	1.1
Concrete (dense)	10-14		1.5

1.2.4 Thermal Comfort

Besides their direct influence on the overall heat loss and gain of buildings, fenestration systems also have an appreciable influence on the thermal comfort of building occupants. Anyone who has sat close to a single pane window in cold weather has probably been uncomfortably aware of drafts and especially the loss of radiant heat from one's body to the cold window pane.

Thermal comfort is a function of metabolic rate, clothing, air speed, relative humidity, dry bulb temperature and mean radiant temperature. The mean radiant temperature is the variable most affected by windows. The surface temperature of glass also sets an upper limit on the relative humidity of room air and so once again on thermal comfort.

The internal surface temperature of glass can be calculated as:

$$T_{glass} = T_1 - (T_1 - T_0)(r_i / R_{tot})$$

where

T_1 = room air temperature = 70°F

T_0 = outside air temperature = 0°F

r_i = internal air-film resistence = 0.69 ft^2°F hr/BTU

R_{tot} = total air-to-air resistance = 1.13 ft^2°F hr/BTU

For single pane glass this gives an internal surface temperature or mean radiant temperature of 21°F

The psychometric chart shows that a surface temperature of 21°F limits relative humidity to 14% or less if condensation is to be avoided. A similar calculation for double-pane glass gives a surface temperature of 42° F limiting relative humidity to 36%. Superpane would have an internal surface temperature of 58° F allowing an upper limit on R.H. of 67%. Humidity levels of 40 to 50% inhibit insensible

perspiration and so increase thermal comfort and prevent the electrostatic build-up that is often a problem in nylon carpeted buildings.

The higher surface temperature also stops convective drafts and increases the global mean radiant temperature of the room as a whole. The mean radiant temperature of a room with 12.5% of its area at 21° and the rest at 65° mean radiant temperature would have a global mean radiant temperature of 59.5° F. If Superpane with a mean radiant temperature of 58° F was substituted for the windows the overall Global Mean Radiant Temperature would be improved to 64° F. Since, according to the ASHRAE Handbook comfort chart a 1° F rise in mean radiant temperature is equivalent to 1.25°F of dry bulb temperature, effective temperature would be increased from 65° F to 68° F if all other variables remain the same, and to 70° F if relative humidity raised from 10% to 50%. This allows indoor air temperatures to be lowered for the same level of effective thermal comfort, giving an additional 3% to 5% seasonal energy savings. This amounts to typically 30% of the direct energy saving of the Superpane system and is thus a sizable effect.

Figure 1-4

MEAN RADIANT TEMPERATURES AND HUMIDITY TOLERANCE OF FENESTRATION SYSTEMS

WINDOW SYSTEM	TEMP. DROP °F	INSIDE SURFACE TEMP = MRT °F	UPPER LIMIT TO R.H.%
Single Pane Glass	49	21	15
Double glass	28	42	36
Superpane	12	58	67

1.2.5 Economic and Market Considerations

Producibility

1. Here the main requirement is design compatability into existing off-the-shelf materials and standard mass production techniques. With the exception of the vacuum deposition of the Heat Mirror on the polyester substrate, all materials and production process involved in producing the Superpane retrofit must use standard mass-production techniques such as extrusion, injection molding and roll coating. Since this aspect of the program is dealt with extensively in other sections of this report it will not be further pursued here.
2. Compatability with existing distribution and service networks. This calls for a roll goods format for the Heat Mirror with a high value-to-volume ratio to ensure economic transportation and ease of inventory control. Standard lengths or a roll goods format for the edge frame and ease of sizing, assembly and maintainence.
3. Ease of assembly or installation on a do-it-yourself basis by homeowners. This requirement calls for a simple, straight foreward design, with as few components as possible, a minimum number of assembly and installation steps, no need for special tools, assembly techniques or skills and a minimization of required assembly and installation time.
4. Consumer appeal. Good appearance and compatability with common window decors.
5. Low Cost. The market sales area is determined by energy savings. The greater the thermal resistance of the retrofit and the lower the square foot installed cost, the larger the market area. This sets stringent production cost limitations on the retrofit design which has to be value engineered component by component.

1.2.6 Design Specifications

The design study resulted in a set of design specifications that all retrofit window systems should meet. These specifications were used in the test program to evaluate the intended retrofit window systems developed.

1. A solar transmission of 75% or more to avoid greying and significant reduction in solar insolation.
2. Optical neutrality, i.e., no distortion or lensing effects.
3. A thermal conductivity of 0.35 BTU/ft^2°F hr. (to achieve number 11 below)
4. An inuse life of at least 5 years or more. (to achieve number 11 below)
5. Non-interference with operable aspects of windows; ventilation screening, drapes.
6. Adaptability to different window types and sizes, a four foot free span. Good appearance and compatability with existing window decors.
7. Ease of assembly and installation.
8. Impact and fire resistance (self extinguishing).
9. Security of installation (5 years) in the presence of air pressure, moisture, vapor pressure and thermal differentials.
10. Ease of cleaning.
11. Low cost; payback within 4 years in a 4,500 degree day climate i.e. \$2.20/ft^2 or less. (see 5.1.2 and 5.1.3)
12. Compatability in the existing production methods.
13. Compatability in the existing distribution and service structures.

1.3 SUPERPANE SYSTEM DESIGNS

1.3.1 Design Morphology

The information resulting from the design studies was organized into a sequence of design decisions or options. Each such option defines an exclusive alternative in response to a particular design decision. When combined with the design specifications this approach can be used to generate a set of retrofit designs.

1. Placement - The first option set concerns the placement of the retrofit which may be either (P_1^1) inside the existing window or outside (P_1^2). Since we were concerned specifically with internal retrofits, only the first option was considered.
2. Installation - The Heat Mirror film may be laminated directly to the existing glass (P_2^1) using an optical adhesive or the film may be separated from the glass by an air gap (P_2^2).
3. Substrates - The Heat Mirror itself may be laminated to a rigid sheet, e.g. glass, acrylic or Lexan separated from the window by an air gap (P_3^1). Alternately a semi-rigid substrate such as 15 mil fire retardent PVC sheet can be used (P_3^2). The final option in this set is the use of flexible, 1 to 3 mil plastic films. Candidate films are polyester, PVC, PFA and triacetate (P_3^3).
4. Heat Mirror Position - The transparent selective surface may be facing the air gap or facing the room or facing the outside (P_4^1, P_4^2, P_4^3).
5. Assembly - The Heat Mirror component can be either sealed permanently to the edge frame or detachably clamped to it (P_5^1, P_5^2).
6. Air Gap - The resultant air space can be either hermetically sealed (P_6^1) or vented to the interior (P_6^2) or vented to the exterior (P_6^3)
7. Pumping - Expansion and contraction of the enclosed air mass can be accomodated by the edge frame, the film itself, or by venting (P_7^1, P_7^2, P_7^3).
8. Frame Thermal - Expansion and contraction of the frame can be accomodated either by compressive or tensile absorption in the frame itself

(P_8^1) or by matching the coefficients of expansion so that the frame and glass expand and contract together.

This analysis gives an overall design decision morphology of:

Figure 1-5

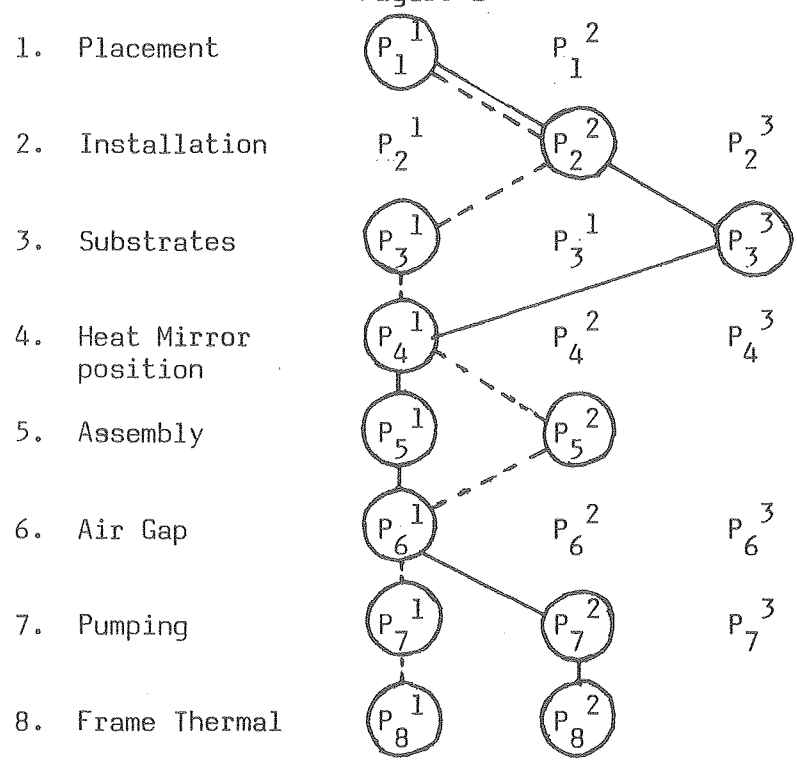

Different paths through the options defined result in alternative designs. For example the path with solid bars defines the standard Superpane retrofit. The path with broken lines defines the rigid sheet/foam edge/magnetic clip version. In all, four different designs were developed. (Fig. 1-6)

In order to avoid confusion in nomenclature it should be noted that the term 'Superpane' refers to the standard Superpane package that consists of a vacuum coated polyester film spanned across a transparent edge detail to form a 3/8" air gap. The other designs are basically variants of this with the exception of the option of direct lamination to the window glass. (Fig. 1-6 E)

These designs are compared in Figure 1-7.

Fig. 1-6. Superpane Designs

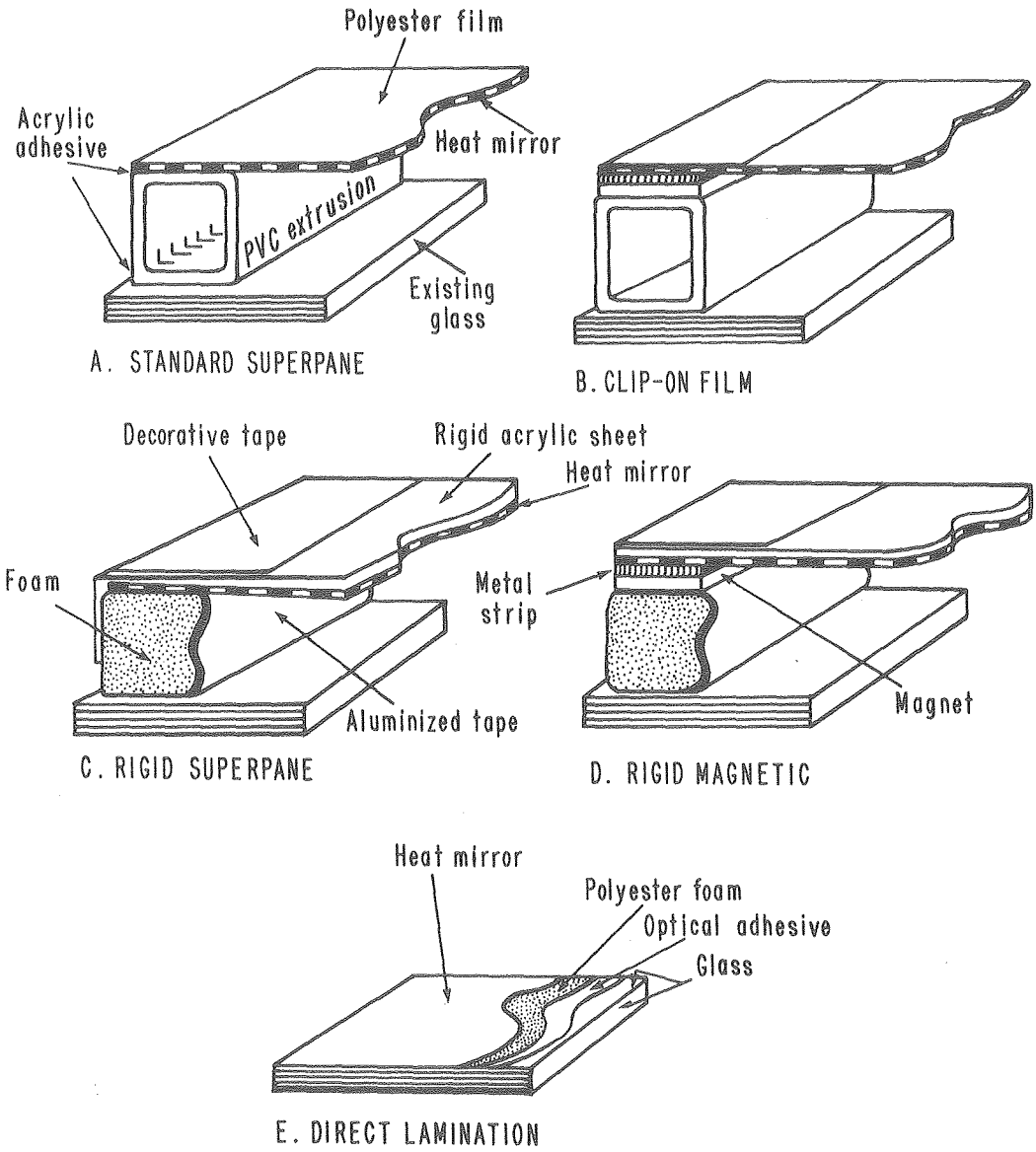

XBL 799-2678

Figure 1-7

Comparison of Alternative Designs

Specification Criteria (from 1.2.6)	Designs from Figure 1-6				
	A	B	C	D	E
1. Transmission over 75%	yes	yes	yes	yes	yes
2. Optical neutrality	yes	yes	yes	yes	yes
3. U 0.35 BTU/ft^2, °F-hr.	yes	yes	yes	yes	no (0.56)
4. Five year life or more	yes	yes	yes	yes	yes
5. No operational interference	ok most designs	ok most designs	ok most designs	ok most designs	yes
6. Adaptibility and appearance	ok	ok	good	good	good
7. Ease of assembly & installation	Excel-lent	Excel-lent	Excel-lent	Excel-lent	ok
8. Impact and fire resistant	ok	ok	ok	ok	Excel-lent
9. Security of installation	good	good	good	good	marginal
10. Ease of Cleaning	ok	ok	good	good	good
11. Low cost	ok	ok	ok	ok	excellent ($1.40)
12. Production capability	new	new	new	new	new
13. Distribution and service compatability	exists	exists	exists	exists	exists

1.3.2 Permanent Superpane Retrofit

This design was developed for do-it-yourself installation by home owners. Other than high thermal resistance the unit was designed for ease of assembly and installation, minimum impact on view, compatability with window opening and closing and ease of maintenance

The unit features a hollow transparent polyvinyl chloride extrusion measuring 3/8ths of an inch on a side; injection molded corners and a Heat Mirror on plastic film.

The use of a transparent edge extrusion ensures a standard adhesive interface. The hollowness of the extrusion reduces both thermal conductivity and costs. Increased strength is imparted to the edging frame by the glass.

The Heat Mirror is located on the inner surface of a polyester film stretched across and glued to the frame. This protects it from abrasion and atmospheric corrosion by placing it in a hermetically sealed environment.

Condensation is controlled by the inclusion of dessicants (a granular mixture of silica gel and molecular sieve is placed in the PVC extrusion during assembly).

Components

1. PVC extrusion
2. Acrylic adhesive
3. Injection molded corners
4. Expansion/contraction connectors(necessary for lengths longer than 4') These connectors are sleeves which are square in cross section and allow movement of the edge rods
5. Heat Mirror film
6. Dessicant

Assembly Procedure

1. Measure windows to be retrofitted and enter measurements on code card and perform indicated calculations to size edge rods.
2. Cut edge rods to length allowing for corners and clearance as indicated on code card.
3. Insert injection molded corners.
4. Lay out Heat Mirror on table with selective surface upwards.
5. Remove release paper from frame.
6. Press frame onto stretched film and trim.

Installation (see figure 1-8)

1. Clean window and let it dry.
2. Remove remaining release paper from assembled unit and press firmly into place along the edges.

On the average a 1,500 ft^2 home has between 250 and 350 sq. ft. of windows. Although windows tend to vary widely between homes any one home usually has the majority of its windows of one type and size. The home owner can either retrofit his windows on a room by room basis at a typical cost of $24 per window ($2/ft^2) or retrofit his whole house at a probable cost of $600. It is estimated that the non-professional would require about 45 minutes per window (10 minutes cleaning, 30 minutes assembly and 5 minutes installation).

1.3.3 Interchangeable Retrofit

The second design (see figure 1-6B) is basically the same as the first with the additional feature that the film is attached to the pane by means of a magnetic clamp. This feature allows the Heat Mirror film to be removed at will. If desired solar control films similarly framed can be substituted for the Heat Mirror.

The permanently installed magnetic frame acts as a template for a variety of glass window films and so provides the basis for a sophisticated window management program. Due to the complication introduced

by the magnetic lamp this system is not judged suitable for do-it-yourself installation. The magnetic seal must be perfectly flat around corners to preserve its sealing qualities. It is intended for professional installation in commercial buildings in which heating and cooling loads are significant.

1.3.4 Rigid Designs

The rigid Superpane Design differs by having a rigid sheet of either 60 mil acrylic or 1/16" glass (see figure 1-6 c&d) to which the Heat Mirror is laminated with a standard wet mount optical adhesive. In order to accomodate the thermal contraction or expansion of the enclosed air-mass, the differential expansion along the edge/glass interface and the plate itself, a closed-cell neoprene foam edge is used. This edge is made vapor impervious by an aluminum tape attached to its inner side which has a concave profile to allow vertical elongation. No separate corner detail is required. Costs are higher, approximately $\$2.50/ft^2$ assembled due to the added cost of the rigid sheet and the additional step of laminating the Heat Mirror to it. This unit can be either user installed or professionally installed and is intended primarily for office buildings, motels and other applications where solidarity is of paramount importance. The rigid magnetic design is basically the same with the addition of the magnetic clamp detail and assumes professional installation.

1.3.5 Direct Lamination

The Heat Mirror film can of course, be directly laminated to the window, in the same way that solar control films are, using a wet mount optical adhesive or a pressure sensitive adhesive in high humidity climates. A Heat Mirror installed in this fashion reduces the thermal transmission of single glazed window from 1.13 to 0.56. It has the further advantage of making the glass shatter resistant. However, exposing the Heat Mirror coating to the room interior makes resistance to abrasion and corrosion of paramount importance. This problem needs further research and

Fig. 1-8.

Superpane Installation Procedure

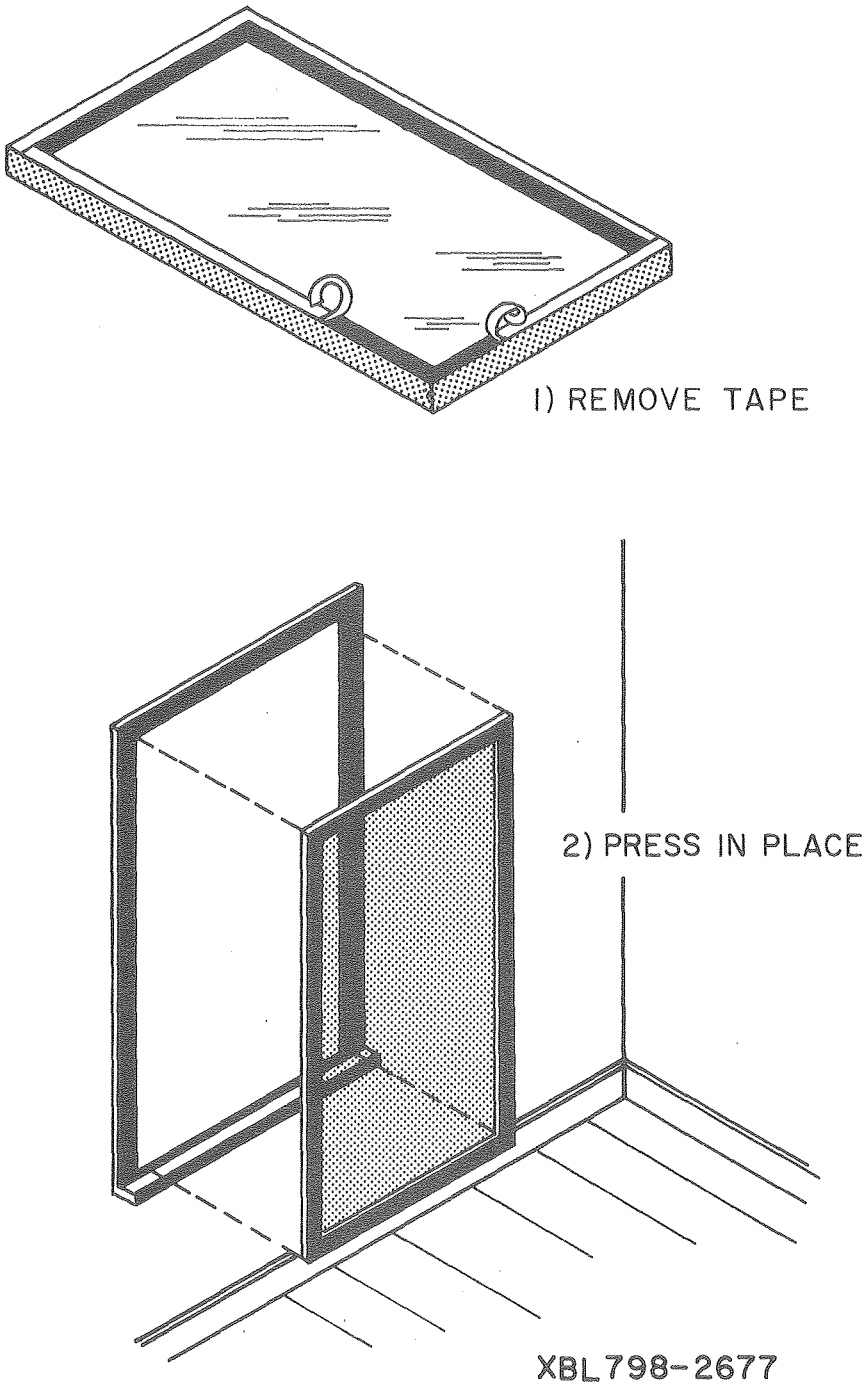

development. In the event an infra red transparent substrate were used, the Heat Mirror coating could be located on the side attached to the glass, thereby reducing exposure damage.

1.3.6 Physical Properties of Component Materials

Three mil U.V. treated polyester is the chosen substrate upon which the Heat Mirror is vacuum coated. The service temperature range of polyester film is -70°C to +150°C. Ultimate tensile strength is 25,000 p.s.i. for oriented film. This substrate pocesses very high dimensional stability, excellent chemical resistence to oils, soaps and solvents and absorbs less than 0.8% moisture after immersion in water for 24 hours.

Polyester film can be r.f. or ultrasonically welded and is availible in widths up to 10 feet.

Figure 1-9
Properties of Polyester Substrate

Residual Shrinkage	0.3% TD 0.7% MD	D-696-44
U.V. resistence	10 - 15 years	Field evaluation
Shade variation	+5%	MacBeth Densitometer Type TD 504
Service temperature	-75°F to 350°F	
Total luminous transmission	90%	D-1003-70
Ultimate tensile strength	25,000 p.s.i.	D-882-61T
Tear strength	.20 grams/mil	D-1004-61
Impact strength	6.0 Kg-cm/mil	D1709-64
Tensile modulus	550,000 p.s.i.	D-882-64T
Hardness (Rockwell)	R-108	D-785
Flamability burn rate	0.4 in/mm	D635
Index of refraction	1.52	Refractometer

Fig. 1-10. Transmission spectrum for polyester film (low range).

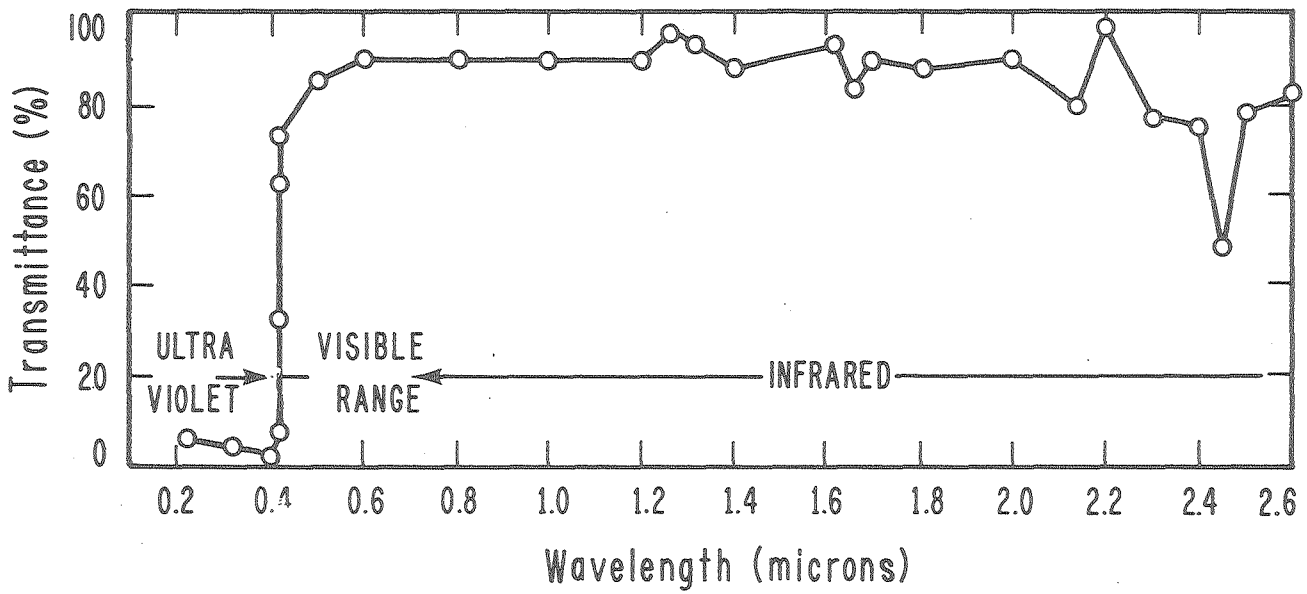

XBL 799-2681

Other substrates may be used. Optical grade polyester (e.g. ICI 442) combines low cost, acceptable optical imaging and acceptable physical characteristics and is the material of choice for window applications. This same selection has been made by solar control film manufacturers. For applications requiring high transmission (e.g. solar collector glazing), FEP (Dupont Teflon) is a good choice although its high elasticity requires web handling adjustments. In general, the chemical independent of the coating from the substrate makes any plastic film a potential candidate for coating subject to surface considerations which may affect adhesion of the coating.

The second major component of the standard Superpane retrofit is the edge detail which consists of a hollow clear PVC extrusion with a wall thickness of .045 inches. The table below summarises the physical properties of the extrusion.

Figure 1-11

Physical Properties of PVC Extrusion

Specific gravity	1.317
Tensile strength at yield	5000 psi
% elongation	14.2%
Flexural modulus	3600 p.s.i.
Hardness (Shore B scale)	76 ± 3 (D-785)
Heat deformation temperature	65.8°C (@280 lb ft)
Light transmission	90%
Toxicity	non-toxic
Flammability	self-extinguishing

Adhesives

This adhesive system must maintain adhesion and provide an air and moisture-tight seal for five years when it is applied to a cleaned window. The following performance specifications were developed; the adhesive must have a tack bond, it must be perfectly transparent, it must be thick and "gummy" enough to flow over irregularities in

the glass surface; it must have low creep, it must lose none of its above properties on extended exposure to the ultraviolet component of sunshine, ozone, atmospheric pollutants and fungus. It must also withstand frequent opening and closing of the window, thermal cycling, and pressure differentials. These pressure differentials arise from variations in barometric pressure and seasonal thermal cycling.

The only polymers which met these criteria were the silicones and acrylics. An extruded pressure sensitive Acrylic adhesive (3M's Isotac) was found to form an excellent air tight and transparent bond. Accelerated aging tests at high temperatures indicate that creep will not be a problem. The assembled Superpane was pressed onto a piece of glass. The 12"x18" retrofit was loaded in a vertical position with a 2 lb. weight. At 130°F, and there was no noticeable creep after 100 hours.

2.0 HEAT MIRROR PRODUCTION SIMULATION

The goal of this section of the work was to determine the feasibility of mass production of the Heat Mirror from a technical and economic viewpoint. It was found that Heat Mirror could be produced with adequate performance for the Superpane application at a roll goods selling price of about 50 cents per square foot.

There are two generic classes of heat mirrors, those based on semiconductors and those based on metals. The semiconductor heat mirrors are typically indium-tin oxide (ITO) films from 1,000 Å to 20,000 Å thick. The main advantage of semiconductor heat mirrors is their superior abrasion resistance when applied to glass. There is also promise of making low performance ITO heat mirrors very inexpensively by chemical spray decomposition onto the hot glass as it leaves the rolling mills. Since this process ties into existing production facilities with little modification, it promises to be quite inexpensive as opposed to vacuum coating which is intrinsically expensive due to glass handling problems. It is, incidently, for this reason that we chose to coat heat mirrors onto plastic.

Some of the semiconductors which have been explored for use as transparent conductors in electronic displays and which therefore might be useful as heat mirrors are SnO_2, In_2O_3, Sn doped In_2O3 (ITO), CdO, and Cd_2SnO_4.[1] The most promising semiconducting material for use in windows appears to be ITO because it has the highest transmission combined with low emissivity. The SnO_2 coating was the most popular, usually with doped F^- or Cl^-, and is still the least expensive, but compounds like ITO are replacing it. Both SnO_2 and ITO coating on glass are commercially availible from P.P.G.

1. (References - N.F. Mott and R.W. Gurney "Electronic Processes in Ionic Crystals: Oxford University Press, London and N.Y., 1948 --- R. E. Aitchison, Aust. J. Appl. Sci. 5 10 (1954) - E.J. Verwey, P.W. Haaijman, F.C. Romeijn, and G.W. van Ovster hout, Philips Res. Rep. 5, 173 (1950)

The disadvantages of semiconductor heat mirrors are; lower thermo-optical performance (transmission/emissivity ratio), lower production line speeds for vacuum coating due to much greater thickness and the impossibility of coating plastics because high performance ITO requires an annealing process which would melt the plastic. One would think that since ITO is an oxide that it would be intrinsically corrosion resistant, but its low emissivity is caused by non-stoichiometry and this oxygen deficiency is "corroded" by atmospheric oxygen to produce a stable film with high emissivity.

Metal heat mirrors are typically 100 to 1,000 Å thick and consist of a layer of a high conductivity metal such as gold or silver with anti-reflection coatings on one or both sides. The advantages of metal heat mirrors are; high performance, rapid line speeds and ease of coating plastics. The principle disadvantages are poor resistance to abrasion and, except for gold which is too expensive and too limited in supply, poor corrosion resistance.

Metal conductive transparent films have long been used for defrosting aircraft windshields. This technique was first developed during World War II [1] and has since been refined somewhat. Sierricin Corp currently supplies most of the transparent conductors used in aircraft in the U.S. They use a gold film deposited onto polyester which is then laminated within the windshield. The high cost and low transmission of gold make its use in window applications questionable. Fan has done some work with sandwiches of TiO_2, silver and TiO_2.[2] He has reported good optical properties but has had trouble with abrasion and corrosion.

The Suntek heat mirror consists of a multilayer coating incorporating an anti-reflection layer and is produced by magnetically enhanced sputtering. The specific process and materials were developed before the initiation of this contract and are proprietary to Suntek.

---

1. L. Holland "Vacuum Deposition of Thin Films: Wiley, New York, 1958
2. F. Fan "Wavelength Selective Surfaces for Solar Energy Utilization" SPIE Vol. 85 (1976) P39 -45

2.1 OPTICAL THEORY AND COMPUTER OPTICAL DESIGN

2.1.1 Theory of Visible Optics

Visible optical properties are calculated by a matrix approach and then computed on a digital computer with real-time capability. This mathematical approach handles different wavelengths, angles of incidence, thicknesses of layers, properties of substrates, and complex refractive indices of films. In addition this matrix approach is amenable to optical dispersion variations which are often important in these applications. A further advantage of the matrix approach is the savings in computer time due to the fact that the characteristic matrix:

$$\begin{bmatrix} B \\ C \end{bmatrix} \qquad (1)$$

is an invariable property for any particular stack of semiconductors, dielectrics or metallic layers. This characteristic matrix is not affected by the addition of other layers on either side of the stack, therefore the characteristic matrix can be stored in core memory rather than re-calculated for each iteration of the program. (Some references useful for problems involving matrices, trigonometric functions of imaginary numbers, and solutions of thin film properties with this notation, are given in footnote 1 below.) This basic approach is outlined below.

---

1. See Complex Numbers by W. Ledermann, Routledge and Kegan Paul, London, 1960
   For matrix notation consult Mathematical Methods for Physicists by George Arfken, Academic Press, London, 1970.
   A treatment of the matrix approach is in Thin Film Optical Filters by H.A. MacLeod, Elsevier, New York, 1969

The characteristic matrix of the stack is defined:

$$Y = \begin{bmatrix} B \\ C \end{bmatrix} = C/B \qquad (2)$$

Where B and C are the tangential electric and magnetic components of the electromagnetic field, and Y is the admittance.

The optical reflectance is just:

$$R = \left(\frac{a - y}{a + y}\right)\left(\frac{a - y}{a + y}\right)^{*} \qquad (3)$$

In which a is the refractive index of the medium and y is the complex refractive index, or admittance, of the whole stack.

and the transmittance:

$$T = \frac{a_{n+1}(1-R)}{\text{Real part } (BC^{*})} \qquad (4)$$

where the asterisk denotes the complex conjugate.

The absorption is simply calculated by:

$$A = 1 - R - T \qquad (5)$$

The characteristic matrix Y is related to the individual properties of the films by:

$$\begin{bmatrix} B \\ C \end{bmatrix} = \prod_{r=1}^{n} \begin{bmatrix} \cos b_r & (i \sin b_r)/a_r \\ i\, a_r \sin b_r & \cos b_r \end{bmatrix} \begin{bmatrix} 1 \\ a_{n+1} \end{bmatrix} \qquad (6)$$

where

$N_r = n - ik$ (complex refractive index)

$$b_r = \frac{2\pi N_r d_r \cos\theta_r}{\lambda} \qquad (7)$$

$a_r = N_r$ (for case of perpendicular incidence) (8)

Nr = refractive index of individual layer

dr = metric thickness of film is same units as wavelength, λ

λ = wavelength of radiation in vacuum

θr = angle of incidence of radiation on stack

n = number of layers

In the case of a half-wave layer, the film matrix becomes

$$\begin{bmatrix} 1 & 0 \\ 0 & 1 \end{bmatrix}$$

and the film is effectively absent. This result has obvious applications for films of the transparent semiconducting type.

For the case of films with little absorption, the above formulae have a vector representation.

Shown is the case of a ½ wave anti-reflective coating on In_2O_3 at 5400 Å wavelength:

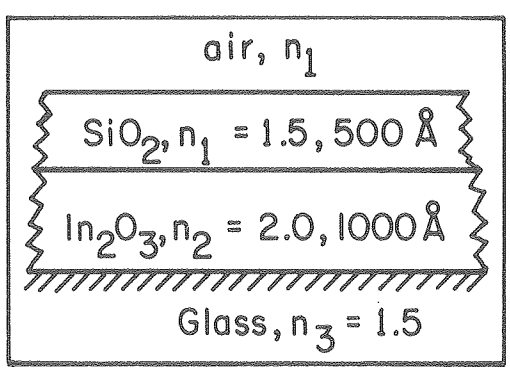

Fig. 2-1. In_2O_3 thin film system. (XBL 798-2667)

The vector representation in Fig. 2-2 is for the thin film device in Fig. 2-1 , a tuned anti-reflection coating of silica on indium oxide The length of each vector is just:

$$r = \frac{n_o - n_1}{n_o + n_1}$$

where n is the refractive index of each layer, the phase angle between vectors is:

$$b = \frac{2 \ n \ d \ \cos \theta}{\lambda}$$

and is then doubled due to the double traverse of the light in the layer.* Fig. 2-3 shows the completed reflection properties of the stack. Note that the reflection is not 0, but near zero. It should be noted that the resultant, r, must be squared to get the (scalar) transmission of the nonabsorbing stack. The vector r is an amplitude.

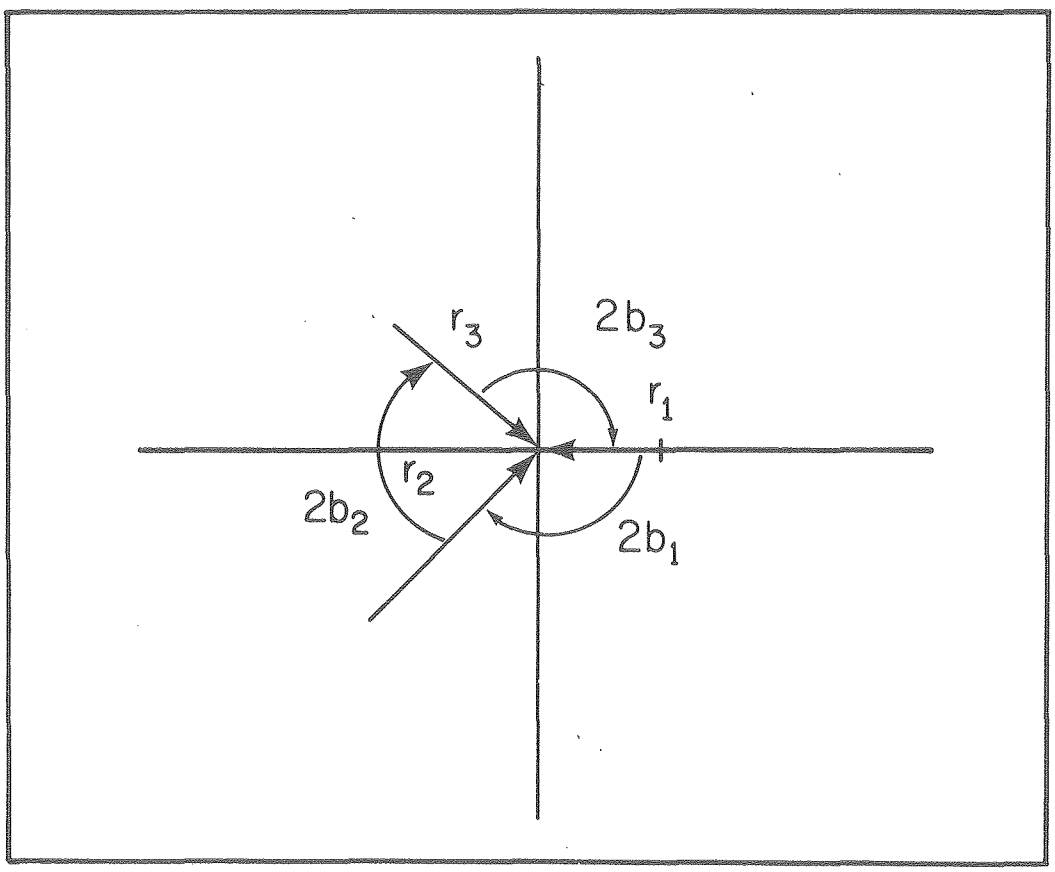

Fig. 2-2. Polar Diagram of Film System 1 Vectors. (XBL 798-2668)

*The symbols have the same definition as in the discussion of the matrix approach.

Fig. 2-3. Resultant of Fig. 2-2 vectors.

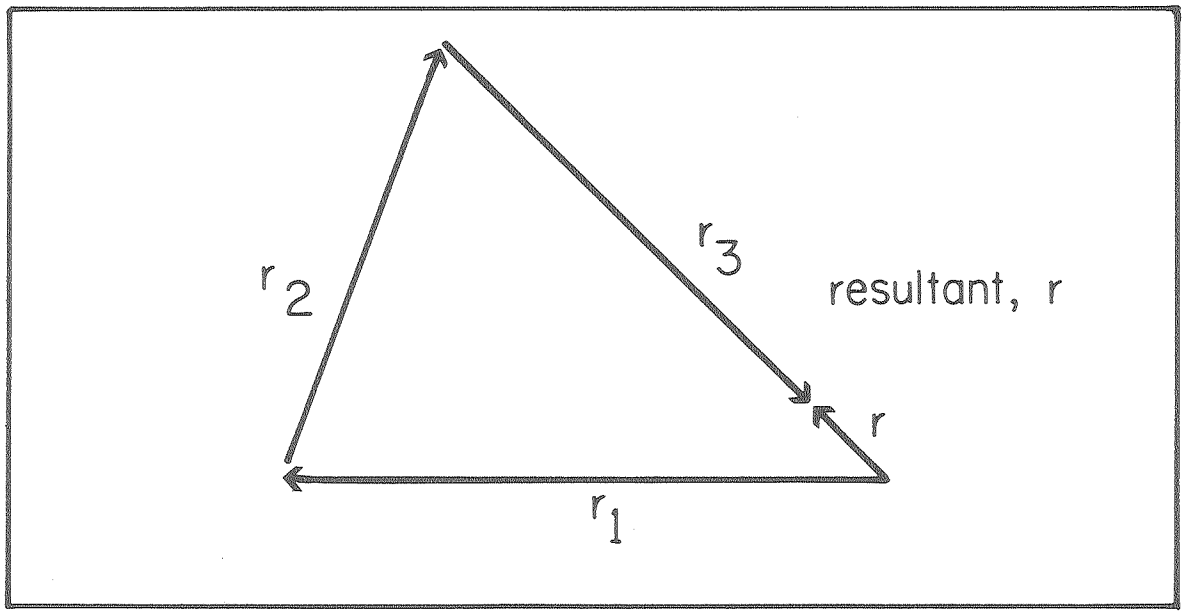

XBL 798-2676

2.2 VACUUM DEPOSITION TECHNOLOGY

There are a variety of vacuum deposition methods available and each has its advantages and disadvantages with respect to quality, cost, reproducibility, and reliability. The following briefly summarizes the principal methods of vacuum coating and their relative merits. Literature citations will permit the interested reader to more fully explore these methods.

2.2.1 Electron Beam Deposition

Electron Beam Deposition uses a magnetically focused beam of electrons to heat the deposition material located in a water cooled copper crucible.[1] The electron beam allows an intense heat to be generated in the source material. ZrO_2 and HfO_2 are routinely evaporated in this manner; it would be impossible to evaporate these materials from a directly heated crucible. The electronic nature of the beam is, however, the source of several difficulties. Secondary electrons can be emitted from the materials by collision with the incoming beam. These secondaries under the influence of considerable space charge generated by the beam, are emitted in a secondary shower away from the crucible. These electrons can cause problems in two ways. The first is that they can ionize the rapidly departing material to form a 'flare , a direct short of the electron beam power. Another difficulty is that the substrate and film may be sensitive to the effects of electron bombardment. Heating, chemical change, and charge build up on the substrate can occur. Another difficulty stems from the space charge itself; the electron beam depends on the electric field for acceleration towards the crucible. The accumulated momentum must be greater than the retarding action of the decelerating space charge field. In practice, these troublesome effects are partially circumvented by scanning the electron beam over the surface of the material. Another expedient is the use of a secondary mode to catch the emitted

1. NATO Conference on Coatings.

electrons. Saturable reactors and 'Crowbar' Circuits in the electron beam power supply are a further aid. Particularly at high rates, control of the electron beam remains a problem with this type of deposition. A vacuum in excess of 10^{-4} Torr is required. The technique's advantages are high rate and wide range of materials. Disadvantages include instability in production and high capital cost of both vacuum pumps and power supplies.

Electron Beam Ion Plating[2] is a variation which uses an electron beam heated source to evaporate into a glow discharge that impinges on the substrate. The evaporated species is accelerated towards the substrate as in regular ion-plating. Problems encountered in this approach revolve around the incompatibility of the electron beam with the pressures of inert gas. The electron beam must be pumped down to 10^{-4} Torr or else the electron beam is made unstable by the gaseous environment. To accomplish this, the electron beam source is pumped separately from the deposition chamber. The material is deposited through a hole in a pressure diaphram which separates the deposition source from the ion-plating region. This opening must be a longitudinal slit for longitudinal source-substrate geometries. The electron beam must be scanned over the entire lateral direction. These requirements dictate an expensive scanning power supply and powerful vacuum pumps. However, the rates achieved can be high and the film quality good.

2.2.2 Sputtering

Sputtering depends on an electric field and ionization to accelerate the material towards the substrate. The traditional process depends on bombardment of the target by accelerated gas ions to dislodge atoms of materials. This process determines the rate which is the source of the biggest weakness of ordinary sputtering, its low rate. The material so

2. Smith, H. E-beam Ion Plating, Airco Temescal Publication, Airco-Temescal Corp., Berkeley Ca. Therman, H. Deposition of Multicomponent Phases by Ion Plating. J Vac Sci Tech. V.9, #6, p.1397

dislodged is partly ionized, and the ions are accelerated by the electric field between the target and substrate. The success of sputtering depends on this acceleration; massive target ions, even after four or five collisions, can arrive at the substrate with energies of 50ev. This energy compares favorably with the energy of thermal evaporation - on the order of $KT \sim 1$ ev.

The limitation of the rate of sputtering stems from the lack of enough electrons to form a highly ionized plasma.[3] The electrons are supplied by cold emission from the target face and supplemented by secondary electrons which are knocked free by collisions - in the same manner that electrons are dislodged by light quanta in the photoelectric effect. The emission of electrons from a cold surface is a large, noticeable effect; indeed, ordinary sputtering depends on it. To achieve higher rates of production, the electron density is enhanced by supplying more electrons and increasing the transit time of the electron.

Magnetically Enhanced Sputtering employs a toroidal magnetic field forming a 'bottle' for the electron cloud above the target.[4] The cycloidal path of the electrons, due to the $\overline{E}\overline{X}\overline{B}$ component of force, greatly increases the path length. The probability of undergoing an ionizing collision is increased, and the plasma becomes more heavily ionized. Resultant rates of deposition may be faster than conventional sputtering.

In general, however, rates using magnetically enhanced sputtering are still less than for electron beam or thermal evaporation. For reactive sputtering of dielectrics, for example aluminum oxide in an oxygen atmosphere, the rates decrease dramatically. The rates are only 1/10 - 1/5 as great as the pure metal.

---

3. Chopra, K. Thin Film Phenomena, RNAA, New York, 1969, pgs 34-41

4. John Thornton, Large Area Magnetron Sputtering for Depositing Solar Collector Coatings - Proc. American Electroplaters Society Conf. Nov. 9, 1975

2.2.3 Thermal Evaporation

Thermal Evaporation relies on the kT energy of the substance emitted from a heated crucible or filament. The vacuum should be in the 10^{-5} Torr range or better. The main advantages of this technique are its simplicity and high rates. Disadvantages include instability during production, inability to evaporate many dielectrics and excessive heat loads on the substrate. The instability can be caused by many factors. Many thermal evaporation methods, including induction and resistance heating develop their heat through the I^2R heating of the crucible. The crucible can locally overheat, causing more electrical energy to be dissipated there and a consequent 'hot spot'. Further instabilities can be caused by conductivity in the evaporated charge, and reaction of the charge with the crucible material. In order to avoid the chemical degradation of the crucible, the crucible is sometimes made out of a refractory such as boron nitride. However, given the extreme conditions of constant contact with a reactive material at high temperatures, the lifetime of even the best crucibles is limited. The uneveness and lack of stability of the thermal technique can be compensated for by having a bank of crucibles, monitoring photocells, and a feedback loop controlling the crucibles. The chief advantages of thermal evaporation for production are high rate and low capital cost. Most aluminized polyester film is produced by thermal evaporation.

2.2.4 Reactive Thermal Evaporation

Reactive Thermal Evaporation[3] is the evaporation of a dielectric or metal in the presence of a reactive gas. For instance, indium oxide forms a dark film when evaporated by itself from an electron beam or resistance heated source. Addition of a small partial pressure of oxygen, however, will in most cases limit the darkening of the deposited film. The critical aspect of this technique is to put enough oxygen

Details are given in U.S. Patent 2,920,002.

into the chamber to react but not enough to cause the resulting film to be spongey. A useful technique for depositing dielectrics, successful reactive evaporation units have been built for evaporating SiO continuously to form transparent films. Combined with thermal evaporation, this technique could be a useful method for depositing a wide range of metals and insulators at high rates.

2.2.5 Production of Suntek Heat Mirror

Suntek has surveyed and experimented with many different types of vacuum film deposition. Because Suntek, unlike most vacuum equipment firms, does not market equipment designed for a specific method, we maintain the capability to deposit films by a spectrum of approaches. Suntek has the capability to continuously run and scale up such processes as thermal evaporation, ion-plating, ion-beam sputtering, and magnetically enhanced sputtering.

The Heat Mirror described in this report was produced using materials and procedures previously developed and proprietary to Suntek. These methods are a specific embodiment of magnetically enhanced sputtering. From the foregoing discussion of alternative deposition methods, it is apparent that no single method is superior to other methods in every respect. Factors causing Suntek to select magnetically enhanced sputtering include;

- Established relationship with a vacuum engineering firm capable fabricating jointly designed sources.
- Stability of operation.
- Reasonable capital cost.
- Moderate heat load on substrate.
- Controllable and reproducible.

The reader informed in thin film technology will recognize that the solution to the Heat Mirror requirement is not unique. Comparable results can be achieved by electron beam, ion-beam, or thermal approaches. Since our focus was on production simulation rather than evaluation,

effort was concentrated on establishing the prospective feasibility of Heat Mirror for windows based on existing technology rather than attempt to develop and experimentally compare alternative approaches.

2.3 PRODUCTION SIMULATION

2.3.1 Vacuum Chamber

The Suntek pilot machine (fig. 2-5) is a web coating vacuum evaporator for coating plastic films. It is pumped by a 22" Varian diffusion pump and backed by a 80 c.f.m. Kinney roughing pump. A LN_2 trap is mounted atop the D.P. The machine can accomodate a roll of plastic film 5000 feet long. This web passes over a watercooled drum during coating at line speeds from three inches to 160 feet per minute. The instrumentation monitors pressure, solar transmission, absorption and reflection and I.R. reflectivity during the coating process. Thus the operator can change coating parameters to optimize the solar performance. The machine was originally built for $120,000 before it was extensively modified for our purposes. It simulates production conditions for the Heat Mirror, u.v. reflecting/absorbing coatings and anti-abrasion coatings.

This production simulation machine can coat all of the recognized Heat Mirror materials by a variety of coating techniques. In fact, it can deposit virtually any inorganic compound at high line speeds. Since it has multiple sources, a stack of several layers of different compounds can be coated in one pass. Data on rates, properties and production conditions are recorded and optimized as the machine runs without breaking the vacuum.

Since the web-coater is in all essential respects identical with a full-scale production machine with the exception of web coating width, production data such as deposition rates, power requirements, vacuum level rates, etc. can be scaled up to full scale production on a one to one basis. This permits accurate costing and technology transfer.

Fig. 2-5. Production simulation vacuum web coater.

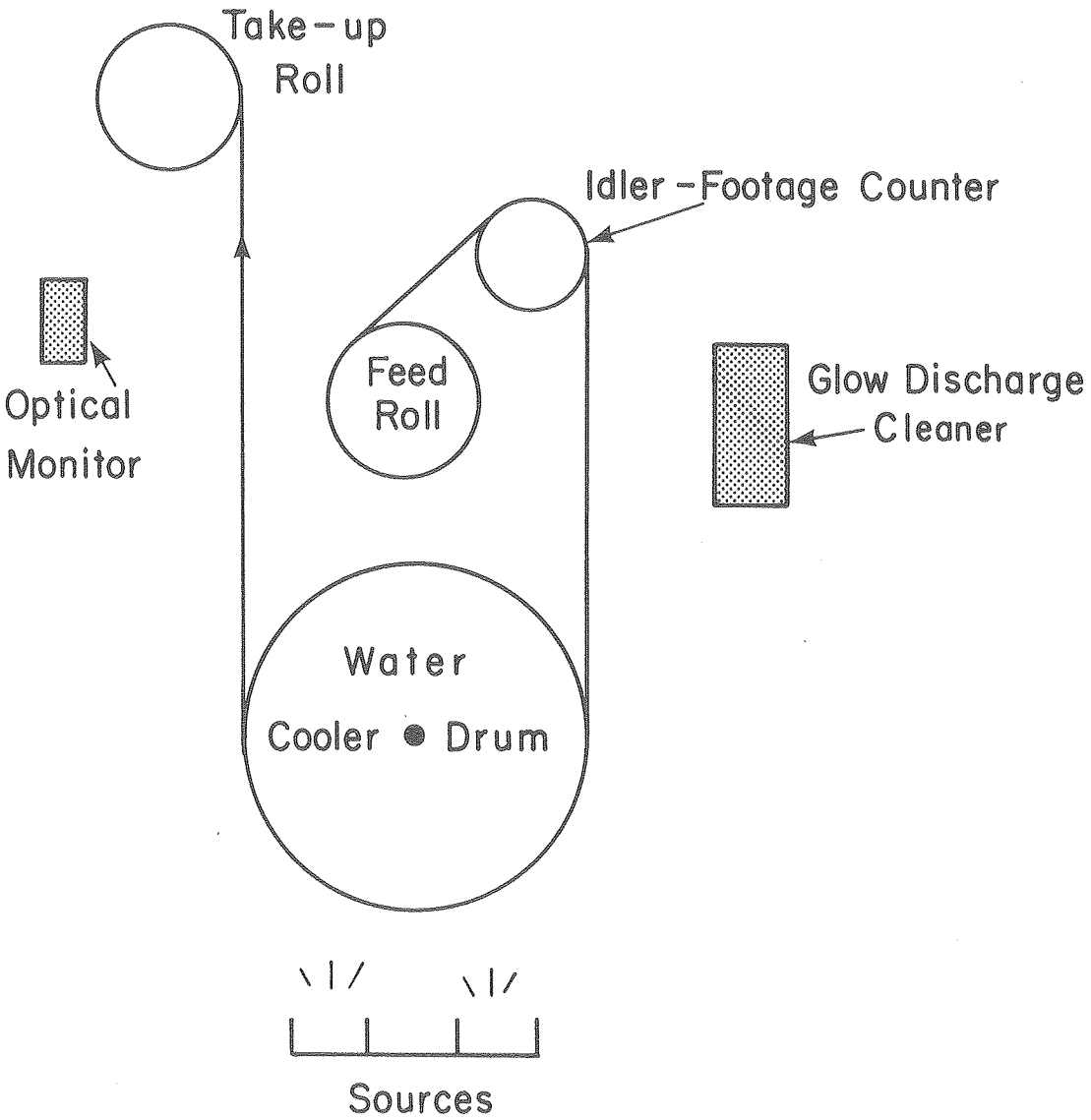

XBL 798-2675

2.3.2 Optical Monitor

A key part of the coating system is the monitoring system for thin film properties. A positioning roller keeps the film flat between solid-state photocell detectors. Several of the detectors are CdS photocells with 5500 Å bandpass filters mounted over them. The filters have 100 Å bandpass at T = 50% and maximum T = 45% (Source is Baird Atomic) The first cell measures reflection and the other measures transmission. By adding the readings, the operator can assess absorption at the same time that the machine is coating. The other detector is a thermoelectrically cooled PbS infrared detector. (Source is Optoelectronics Inc., Petaluma, Ca.)

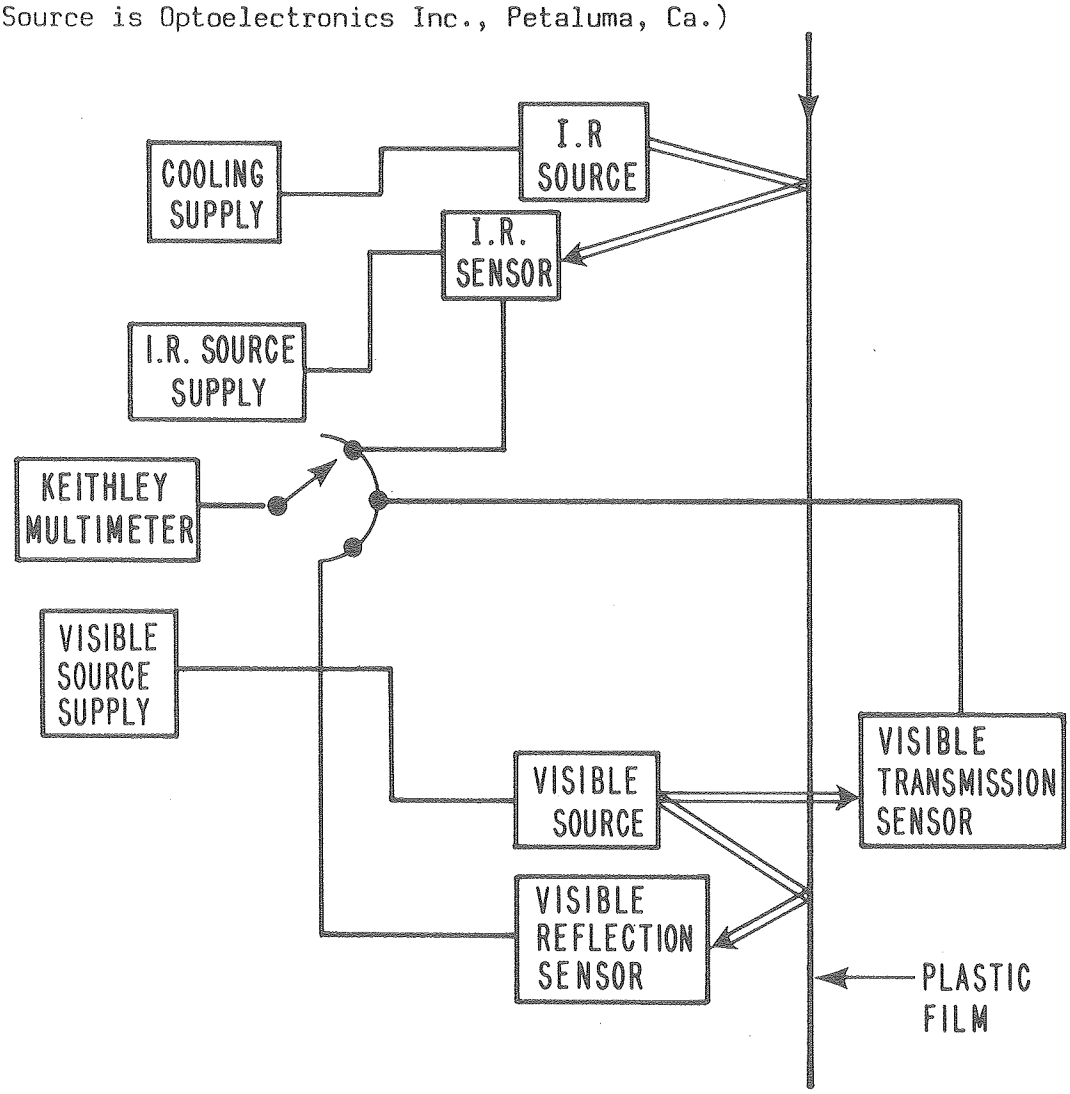

Fig. 2-6. Block schematic of monitoring system. (XBL 798-2669)

Note that this response of the IR detector peaks at 4.5 microns and drops off rapidly. For Heat Mirror performance this was deemed an adequate and sensitive monitoring of performance, since the plasma edge reflection in this region will change most noticeably for variation in production parameter.

Next we designed the source and filter assembly. The most convenient source is an ordinary tungsten filament with the filament temperature set to peak in the sensitive region of the i.r. detector.

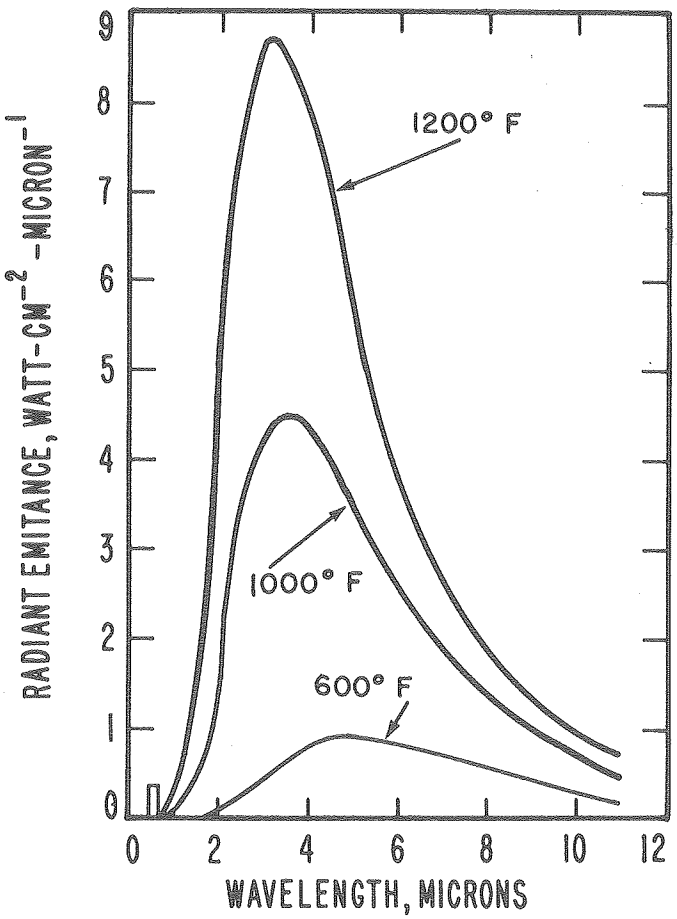

Fig. 2-7. Blackbody radiation characteristics. (XBL 798-2670)

Inspection of the curves in figure 2-7 reveals that the intensity at a particular wavelength will be a sensitive function of the filament temperature. We circumvented this problem by pre-warming the filament and supplying it with a battery. Another problem is that the Planck spectrum from the filament interferes with the detector at the short wavelength range where the Heat Mirror film is not operating. The transmission curves reveal that Germanium is a good filter material for cut-off requirements for the detectors. (Source was Exotic Materials, Costa Mesa, Ca.) The detector source and filter combination performed successfully as designed.

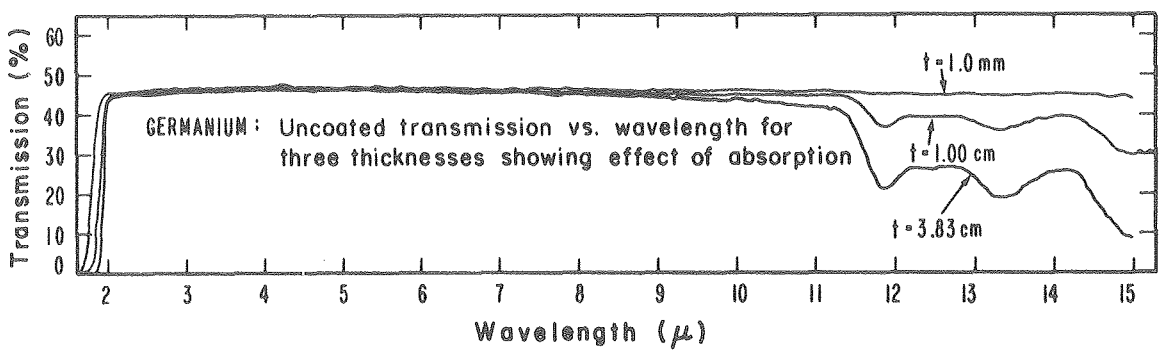

Fig. 2-8. Germanium: uncoated transmission vs. wavelength for three thicknesses showing effect of absorption. (XBL 798-2666)

2.3.3 Web Handling System

The plastic film passes from the supply reel around the water cooled drum and onto the take up reel. Sensors detect the speed of each motor and the electrical signals are amplified and manipulated by an operational amplifier circuit. A constant tension circuit maintains a certain difference in the voltage drops across the main drive motors. This is equivalent to tension of the plastic web. The circuit maintains this tension at a constant speed determined by the free running generator-sensors. It was necessary to repair the unit which was not operational, and to modity the circuity for a greater range of motor speed. Two monitors were place on the web. One monitor reads the elapsed footage on the length of film. Another sensor displays the speed of the web in feet per minute. This information is essential for production simulation as well as monitoring web speed uniformity.

2.4 TEST PROCEDURES AND RESULTS

The Heat Mirror material is monitored during production in the machine. The conditions of deposition are recored as a function of the footage counter reading. Later a series of simple, but precise measurements are performed to correlate the film properties vs. coating conditions. These tests are as follows:

2.4.1 Electrical Conductivity

Electrical conductivity is measured on an 'ohm-per-square' basis using a Keithley digital ohmmeter and a parallel bar probe. The following correlation was found between resistivity measured in this way and infrared emissivity:

Figure 2-9

ohms per square	emissivity
17	.33
10	.19
6.5	.16
3.7	.12
1.5	.06

2.4.2 Hemispherical Emissivity

The procedure for measuring emissivity is described in the instrumentation section of this report. The heat energy is sensed by an Eppley thermopile detector with a gold black absorbing surface.

2.4.3 Solar Transmission

The solar transmission is measured from a xenon arc bulb which has been filtered to match the sun's spectrum (fig. 2-10). In this measurement also the detector is the Eppley thermopile with a Keithley microvoltmeter. The readings can be conveniently checked for accuracy by taking a rapid reading from daylight. (Fig. 2-11).

Figure 2-11

xenon arc reading	outdoor sunlight reading
92%	93%
85%	85.5%
70%	71.1%

The Heat Mirror sample material lost approximately 9% of transmission in the thin film. Other losses were due to the plastic film substrate. The Mylar lost 11% so that the overall transmission was 80%.

Fig. 2-10. Solar simulator spectrum.

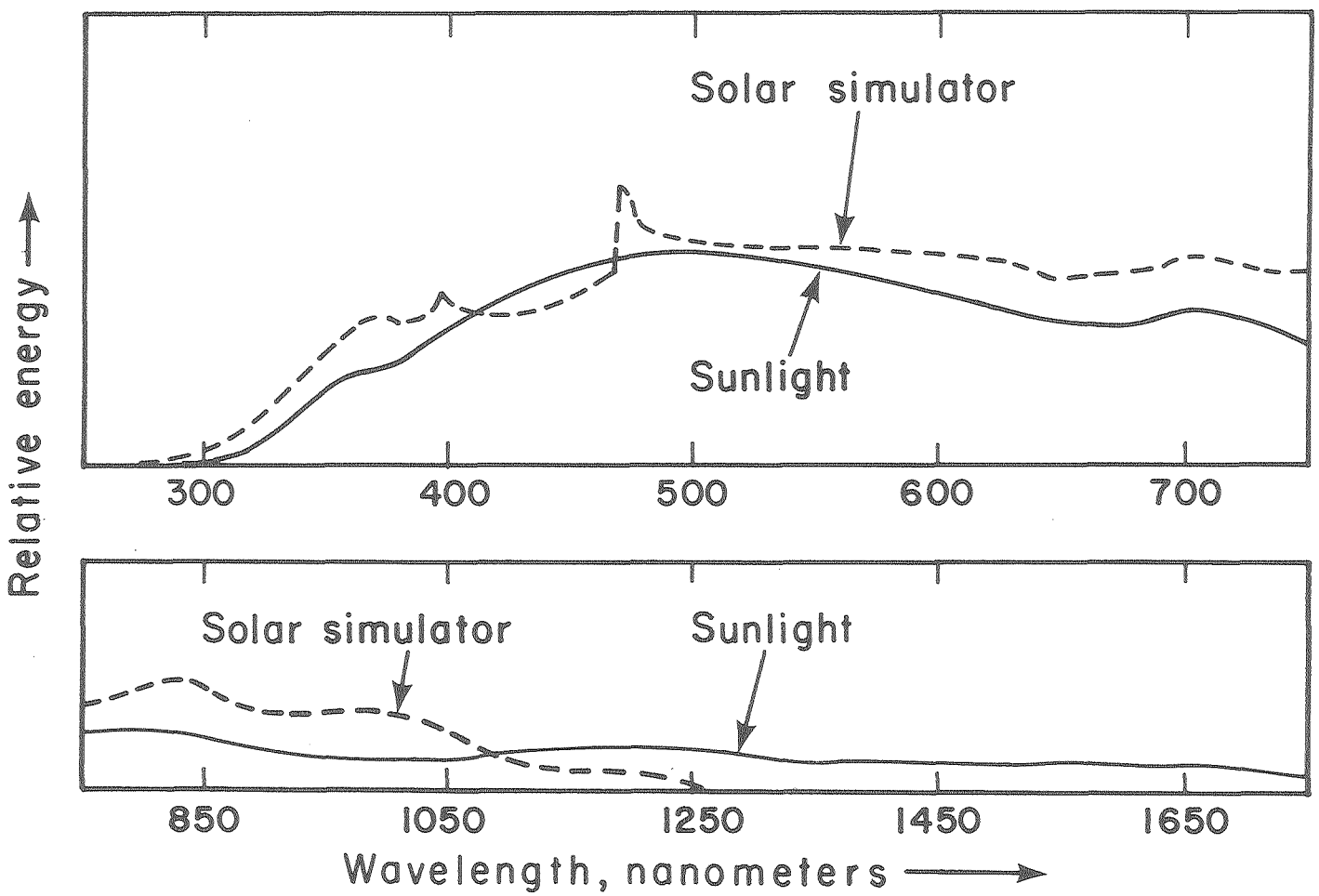

XBL 798-2663

2.4.4 Transmission as a Function of Emissivity

The ultimate measure of the optical performance of any Heat Mirror materials system is its emissivity at a given optical transmission. The hemispherical emissivity as a function of the transmission losses due to the coating of the total solar spectrum is given below for Heat Mirrors that use our materials system and whose optical properties and production rates have been optimized.

Figure 2-12

Transmission vs Emissivity

Emissivity	Optical Transmission Loss, %
.05	24.3
.10	11.1
.15	9.0
.20	7.2

2.4.5 Thermal Resistance

To check the performance of the Heat Mirror under actual conditions, a double pane window was mocked up with a .5 inch air gap. The assembly was placed in the insulation tester (instrumentation section) and tested with a 50°F temperature drop across it. Since both convective and radiative transfer increase more rapidly than linearly with the temperature drop, this is indeed a severe test.

The standard used was a pane of glass covered with aluminum foil (E = .06). The air flow inside the insulation tester is under slow semi-turbulent flow, and does not exactly duplicate a climate with high ambient winds. In such a climate the Heat Mirror will perform even better comparatively than the conservative test results of the insulation tester.

Figure 2-13

Configuration	Winter conditions, 50°F temp. drop U-factor Thermal Conduction BTU/sq.ft./°F/hr.
Double pane configuration with 50°F temperature drop, air gap + .5" Al foil on inner surface of one pane	.31
Same as above but Heat Mirror instead of Aluminum foil facing the air gap	.35
Double pane unmodified	.59

As shown in the figures, the Heat Mirror substantially reduces the thermal conductivity of the double pane configuration.

2.4.6 Abrasion Testing

Abrasion testing consisted of an abrasive loaded elastomer weighted down with a known weight. The elastromer is scrubbed back and forth on a line until the coating fails. With a weight of 200 g, ten motions of the abrasive will produce visible scratching in a soft film. An acceptable film will suffer little or no scratching. This simple 'pass-fail' test is adequate for preliminary screening of the film. Abrasion resistance is adequate for the protected Superpane configuration but anti-abrasion treatment is required for direct application when the Heat Mirror is exposed.

It should be noted that a difficult problem is establishing an appropriate test specification. Further work is also required to establish and validate such a specification.

2.4.7 Corrosion Tests

Corrosion testing was done by the standard industrial procedures for testing metallized mylar window films. They involve exposing the film to 100% r.h. at 130°F for 100 hours or until the film fails. Manufacturers of these film state that if film failure will occur, it will show up almost immediately with this test. The Heat Mirror passed this test. Suntek is in the process of developing a new series of simulated environment tests based on simultaneous exposure of the film to an intensified solar spectrum and corrosive chemical species. One of the difficulties is that the standard industrial tests do not even come near the stringent requirements of a window or solar collector. Many of the plastic films listed as having "good weathering" resistance in the Modern Plastics Encyclopedia, for instance, do not meet the stringent requirements of constant exposure to UV light and atmospheric pollutants on a window pane. Again, the requirement to establish an appropriate specification exists.

Nevertheless a stringent test can be performed by using solutions of ions that are present in the atmosphere and corrosive to the film. Salts commonly used in industrial testing include sodium chloride, copper sulfate, sulfurous acid, and nitrogen acids. We screen the Heat Mirror by immersion in .1 - .001 Mole solutions of various salts. At specified time intervals the sample is checked for electrical conductivity. This information is fed back to the vacuum coaters for optimization of the coating parameters in relation to corrosion resistance. A typical run is to immerse the film in a .001 Mole solution of copper sulfate. After three hours, the unprotected film has doubled in resistivity. Much work is being done to increase the corrosion resistance of the Heat Mirror up to an acceptable lifetime in direct exposure to a severely polluted enviornment.

2.5 PRODUCTION EVALUATION

Heat Mirror Production Costs: The cost of equipping a production facility (plant) for one million square feet a year of output was estimated to be in the $900,000 range.

The major component of this cost is a production scale web coater consisting of:

Vacuum System	$140,000
Chamber	
Pumps	
Valves	
Controls	
Web Transport	70,000
Rollers	
Motor Drives	
Controls	
Sources	265,000
Power Supplies	175,000
Sensors and Controls	65,000
Systems Connections	20,000
Total Web Coater Cost	$735,000

Additional facility cost include:

Cleaner/ inspection stand	$ 50,000
Electrical, A/C and Compressed air	75,000
Machine service facilities	15,000
Building leasehold modifications	20,000
Total	$160,000

Production costs consist of direct variable costs (substrate, sources, consumable supplies, electrical power, etc.), direct fixed cost (labor and associated fringe benefits, etc.) and overhead (rent, insurance, utilities other than electricity, miscellaneous supplies, maintainence, interest on borrowed working capital, equipment lease costs, accounting and legal services, product support, management and administration, etc.).

To these costs, a reasonable profit factor must be added to provide a return to equity investors.

For a roll goods manufacturer, a 50¢ per square foot selling price appears feasible, consisting of the following components:

Direct variable costs	8¢
Direct fixed costs	12
Overhead	25
Profit	5
Total Cost plus profit	50¢

This price of 50¢ per square foot is the estimated price at which the roll goods manufacturer could profitably ship Heat Mirror in bulk quantities, FOB his facility. To reach the consumer, the Heat Mirror must undergo conversion to useful forms and sizes, be appropriately packaged and distributed. The added costs and markups associated with these functions are estimated in Section 5.0 Commercialization Plans. To reiterate, the price of 50¢ is an intermediate wholesale price in bulk quantities and not the delivered price to the consumer. The postulated business is a production facility operating under long term OEM contracts with converters so that no sales, promotion or distribution costs are incurred. R&D is limited to product support which is reflected as an overhead expense; no new product development is provided. Equipment lease costs and interest costs are considered as an overhead cost; therefore, investment is limited to startup costs (costs incurred prior to revenue received) and the non-bankable portion of working capital. Thus investment, and hence return on investment, is dependent on facility start up schedules. Finally, the postulated production rate reflects deposition rates actually achieved in this project. Because of the rather high ratio of fixed to variable costs, an increase in deposition rate would result in reduced unit cost and ultimately, lower cost to the consumer. If fixed costs, overhead and profit are assumed to be constant, the effect of production rate on OEM selling price is shown in the table below.

Production rate	Selling price
1 million sq. ft. per year	$ .50
2 " " "	.29
4 " " "	.185
6 " " "	.15
8 " " "	.1325
10 " " "	.122

While the dramatic effect on selling price suggested above is undoubtedly overstated as so called fixed costs and overhead would not remain constant over a tenfold volume range, the impact of production rate on selling price is apparent. While no work has been done to demonstrate higher rates, use of multiple deposition sources may permit improvement.

3.0 OPTICAL SHUTTER PRODUCTION STUDIES & TEST PROGRAM SIMULATION

3.0 OPTICAL SHUTTER PRODUCTION SIMULATION

The optical shutter technologies that have been evaluated or developed by Suntek Research Associates include the chemically active optical shutter, electrostatic optical shutters, thin film thermo and electro active optical shutters, and mechanical systems. The solar modulation system to be evaluated under this contract was a thermo-chemcial system.

The chemically active thermostatic optical shutter material that was developed is a thin sheet that turns from transparent to translucent white when heated above its transition temperature. On cooling below its transition temperature, the material returns to its transparent state. In its clear state, it has excellent imaging properties and when sandwiched between two plates of glass, the material is undetectable by visual inspection. The material can be made photoactive rather than thermoactive so that it turns opaque in response to sunlight rather than temperature. Or, it can be made both photo and thermoactive so that both sunlight and a temperature above its transition temperature are required.

The material has a light transmission that varies from 92 percent to 20 percent over a 3° C range (fig. 3-3). The transition temperature can be chosen to anywhere in the range of 10°C to 95° C by varying the formulation, and the opacity in the reflective state can be selected by varying the material's thickness. The material has been subjected to 20,000 clear-opaque cycles with no loss of optical or physical properties.

The broad spectrum of formulations developed allows us to tailor performance to specific end user requirements and to tailor manufacturing processes to existing machinery.

3.1 THERMODYNAMIC THEORY

The equation governing chemical reactions and changes of state is given as:

$$\Delta G = \Delta H + T\Delta S$$

The finite change in Gibbs free Energy, G: enthalpy, H; entropy, S: at temperature T; are those changes when the system goes from State A to State B.

$$A \underset{K_2}{\overset{K_1}{\rightleftharpoons}} B$$

The second term on the right in equation 1 is sensitive to temperature, and a direct proportionality exists between G and T. Since the equilibrium constant,

$$K_e = \frac{K_2}{K_1}$$

is proportional to an exponential of G,

$$K_e = \exp\ (-\Delta G/Kt)$$

very small changes in the free energy around its 0-value will mean that the system will be either nearly all A or all B. Therefore, a chemical reaction, change of state, or precipitation from solution can occur over a narrow temperature range. Any change in optical transmission that depends on these changes of state will also be completed over a narrow temperature range.

3.2 PRODUCTION SIMULATION

The production of the proprietary SRA chemically active optical shutter has two critical steps, coating and curing. Since a typical formulation has nine chemical constituents, and since the proportions of many of these must be adjusted to each specific set of production conditions, the laboratory simulation of production processes is fairly tedious.

Production was simulated for the optical shutter using five cure techniques:

1. A time cure, using a two component mixture
2. A heat cure, using a laboratory oven
3. A visible light photocure, using a quartz-iodine floodlamp
4. An ultraviolet light photocure, using a mercury vapor lamp
5. An electron beam cure, using an electron curtain (subcontracted)

From these simulations, estimates of production speeds were made. The production speeds varied between four feet per minute for the time cure and 50 feet per minute for the electron cure. The time cure is too slow for continuous roll production but acceptable for hand lay up operations. The heat cure has difficulties in that it switches the device 'on' during production. The visible and UV cures seem low capital and rapid enough ($\sim$ 20 feet per minute). The electron cure has difficulty penetrating a top layer of glass or plastic when the top layer is greater than a mil in thickness. The UV and light cures seem the most productive. Each curing process has a different sensitizer, activator and catalyst. The proportions of these must be adjusted and optimized so that different curing methods can be compared on the basis of equal performance. Performance is measured by the sharpness of transition from clear to reflective and by the opacity in the reflective state. It is assumed, for chemical reasons, that the clear-opaque cycle life tests and the accelerated aging tests will produce similar results for the various above cure techniques. Also, these tests take too long to provide guidance in optimizing formulation, a many stepped iterative process.

Several coating processes were evaluated:

1. Knife coating
2. Curtain Coating
3. Roll coating, reverse and direct
4. Spray coating, one and two component
5. Coextrusion

In all of these coating methods, viscosity control is important. Knife and roll coating have difficulty building up the thickness required, because of viscosity and flow problems. Spray coating has a similar problem, since the mixture has too high a viscosity to spray. The mixture had too low a viscosity to extrude. Curtain coating, in which the semi-solid mixture is flowed directly out the substrate seemed the best choice.

This information was transferred to a major polymer processing company and entered into their production engineering evaluation of large scale production.

The initial task in the development and production feasibility study for the optical shutter involved pretuning the chemical constituents for compatibility with standard commerical production processes. Specifically, three problems had to be addressed:

1. Minimization of gel thickness for a given degree of opacity while maintaining a sharp phase state threshold (5°F or less) when going from transparent to reflective.
2. A reduction in the viscosity from 700 poise to 500 or less while maintaining adequate gel strength.
3. The development of high speed (5 minutes or less) and low cost curing systems.

Subsequent to this development work, which involved the fabrication of more than 60 3" by 3" samples, a limited laboratory production run of 12" by 16" architectural samples was undertaken for test purposes.

The production method chosen for the preparation of architectural size samples of the optical shutter was constrained by available laboratory equipment and does not lend itself to scaling up to mass production. Figure 3-1 is a flow diagram showing the steps involved in the fabrication process.

Fig. 3-1. Optical Shutter Fabrication

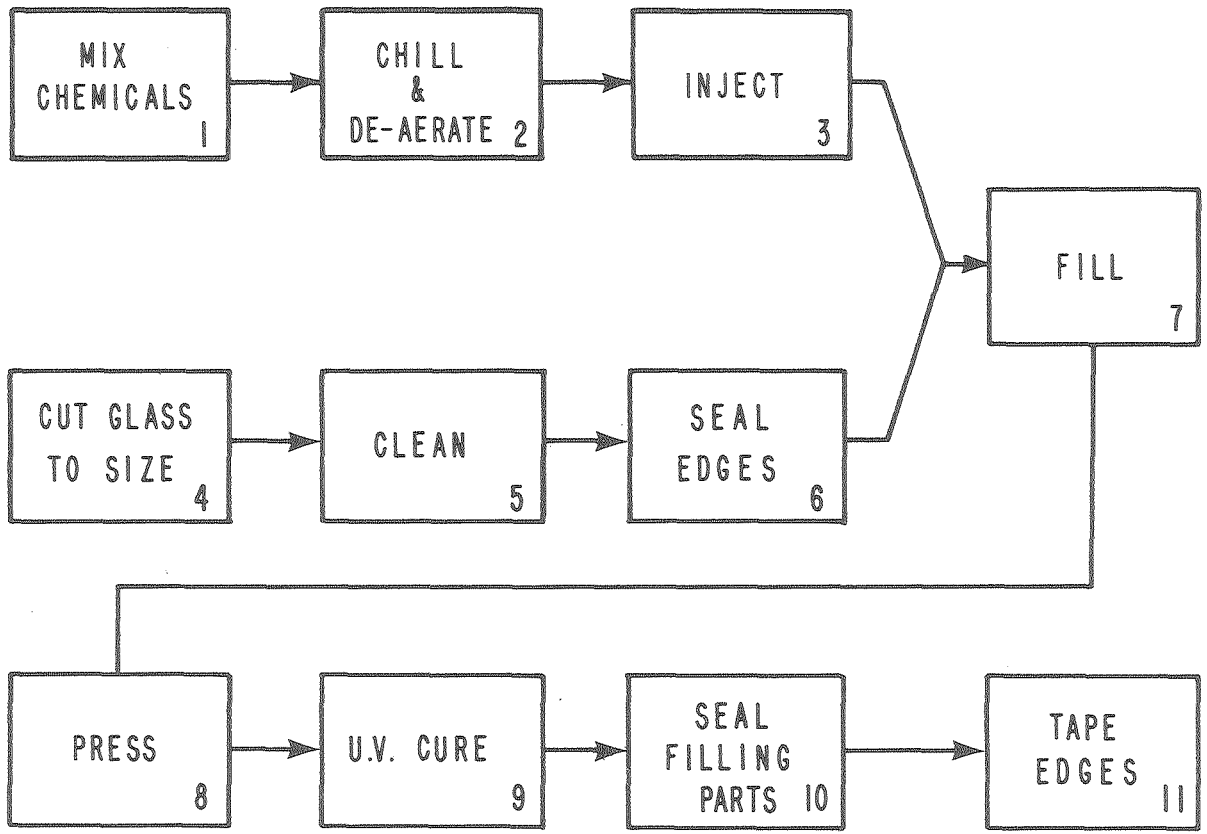

XBL 798-2674

Fig. 3-2. Thermo-optical sandwich.

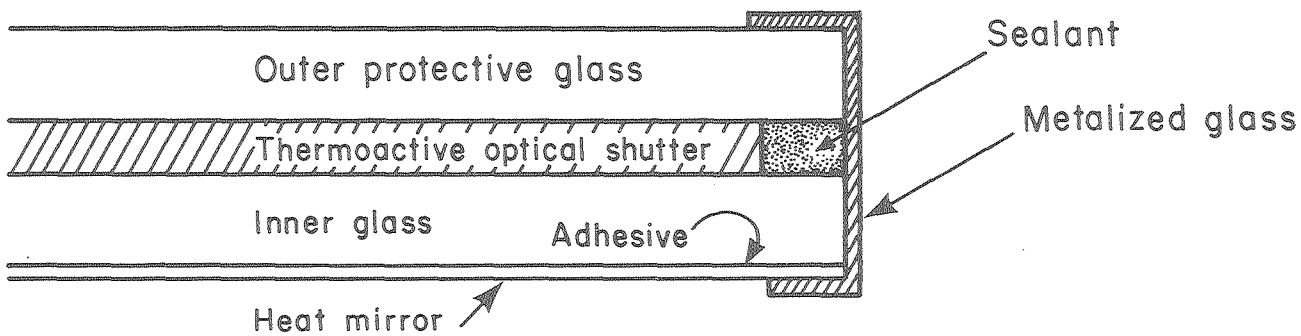

XBL 798-2655

The blanks were prepared from ordinary single strength 1/16 inch glass panes. The edges were sealed with silcone to maintain a 1/32nd inch spacing between the panes. To prevent solvent loss the edges were further sealed with aluminized tape. The outgassed chemical mix was injected into the blanks through a port at the bottom corner. A similar port at the opposite top corner allowed air to escape. A peristaltic pump was used to force the highly viscous mix between the panes. If necessary the filled blank was vibrated to remove any bubbles diffused into the deaereated mix. The blank was then pressed to remove excess chemicals and the ports sealed. The blank was placed in a cooled u.v. chamber and polymerized by high intensity u.v. radiation. u.v. curing was selected from the methods of oven curing, catalyst curing and electron curtain curing because it produced a high quality finished product with inexpensive processing machinery.

3.3 TEST PROCEDURES AND RESULTS

The optical shutter samples produced by the laboratory procedure described above were subjected to a rigorous testing program. This program concentrated on 3 different areas:

1. Solar and optical transmission properties.
2. Thermal properties.
3. Phase-change characteristics and cycle life testing.

3.3.1 Optical Tests

Test 1: Solar transmission in the clear state (0.3 to 2.5 microns)
Test Method: A sample was inserted in the aperature of a radiant flux meter and the transmission read. (see fig. A-6)
Results: The optical shutter material itself was calculated to be 92% transparent. When packaged, the transmission was that of the packaging material; 87% in the case of glass.
Conclusion: Solar transmission in the clear state was judged to be excellent.

Fig. 3-3. Optical shutter transmission vs. temperature.

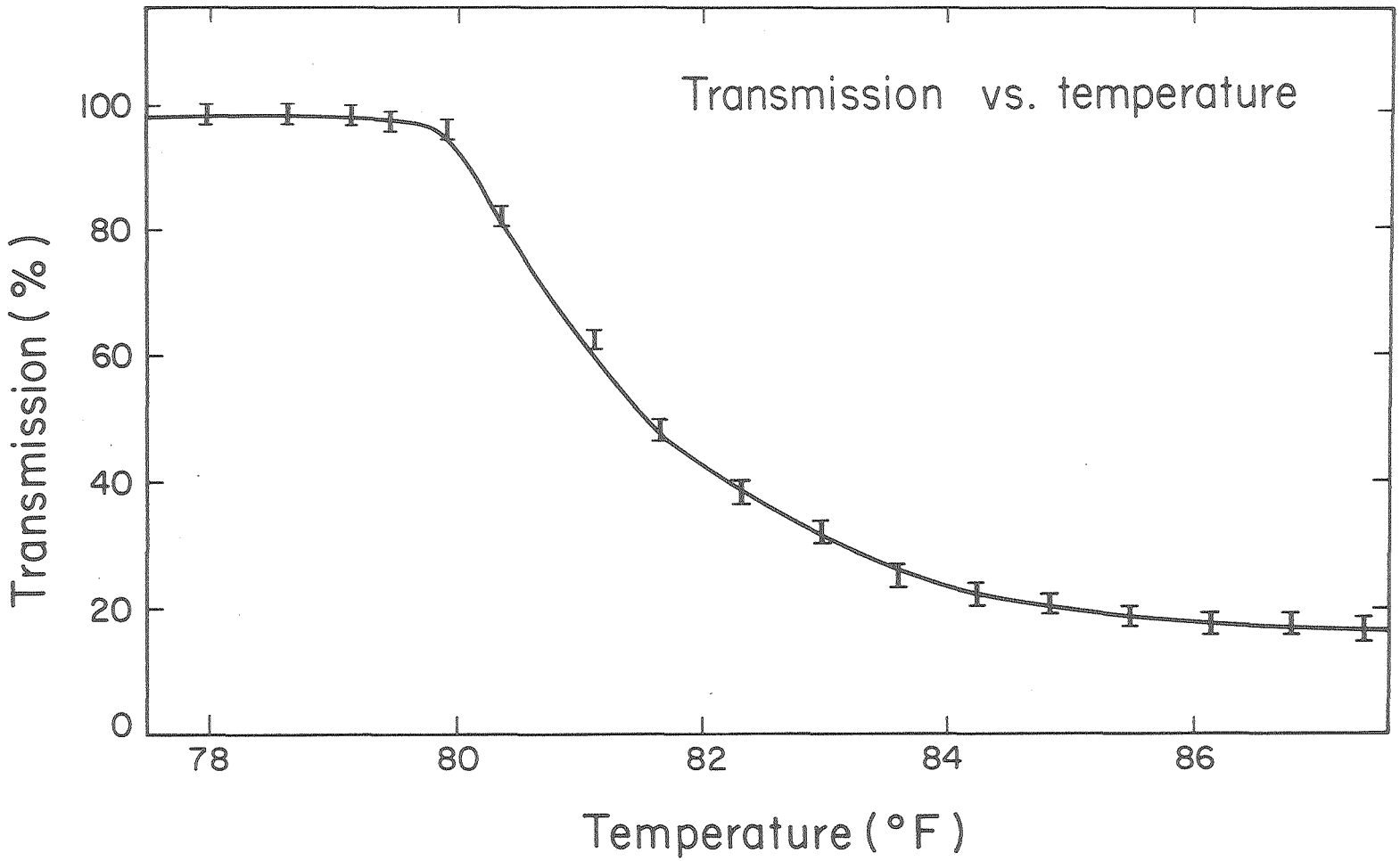

XBL 799-2684

Test 1.2: Solar transmission in the white reflective state.
Method: As before except that the sample was preheated in an oven to 35°C so that it changed phase. The sample had sufficient thermal capacity to remain above the transition point during the period of the test.
Result: Some variation was found between different samples but no samples transmitted more than 25% of the incident light and most samples transmitted 20% or less. In some cases the transmission was slightly less at the extreme edges of the sample than in the center.
Conclusion: The opacity of the optical shutter is a function of the formulation of the chemical constituents and other things being equal the thickness of the optical packaging material. Transmission in the opalescent state can be tailored to the application. It was further found that in the opalescent state specular light was diffused to give almost perfect hemispherical dispersion. This is an advantageous characteristic in relation to both plant growth and day lighting.

Test 1.3: Long i.r. transmission (2.5 to 40) Both the clear and opaque states.
Method: The sample is inserted in an i.r. Spectrophometer and a spectrum is read out.
Results: All samples were found to absorb 95% of i.r. radiation
Conclusion: The optical shutter is virtually i.r. opaque in both phases. This property is important is what is essentially a thermo-optic sensor.

Test 1.4: Optical Neutrality samples were inspected for color distortion lensing effects, graininess and haziness
Method: Visual inspection
Results: No color effects were observed in any of the samples inspected. Some samples exhibited lensing effects due to excess injected material bowing the glass panes. This subsequently led to mechanical failure in some cases. The best samples were clear of graininess. When warmed to the threshold transmission temperature the optical shutter would characteristically haze over before turning white, otherwise haziness was absent and the presence of the optical shutter

material could not be observed by visual inspection.

Conclusion: Chemical purity and homogeniety of layer thickness are crucial for high quality optical shutters. Given these, the optical shutter performs very well in optical terms.

Test 1.5: Resistence to u.v. radiation.

Method: A sample of the optical shutter material was placed in Suntek's solar simulator and exposed to intense radiation for 200 hours. The sample was subsequently removed and visually inspected and tested for its operational properties.

Results: No deterioration in either optical or operational properties was observed.

Conclusion: u.v. degradation is not a limiting factor on the useful life of the optical shutter.

3.3.2 Thermal Tests

Test 2.1: Extended exposure to 80°C and 10°C temperatures, i.e. long duration in the clear and opaque states.

Method: A sample was placed in a temperature controlled oven for three weeks at a constant temperature of 85°C and a further three weeks in a cooler maintained at 10°C. The sample was tested subsequently to each condition for optical neutrality, transmission properties and operational response.

Results: No degradation in properties was observed.

Conclusion: While it cannot be claimed that this test is conclusive, supportive data - i.e. samples that have been in the lab for up to 3 years, lead us to believe that prolonged maintainence of the optical shutter in either of its phase states does not effect its performance. Theoretical considerations would lead one to expect failure in the opalescent state, however, the severity of the high side test gives us confidence that this is unlikely to occur in use.

Test 2.2: Exposure to above boiling point, 120°C temperatures.
Method: A sample was placed in a temperature controlled Froler Scientific oven which was gradually brought up to temperature. The sample was inspected at 5°C intervals.
Results: The optical shutter behaved normally until a temperature of 100°C was reached at which point the gel delaminated from the glass, yellowed and irreversible degradation occurred.
Conclusion: The optical shutter cannot be employed in thermal enviornments above 95°C.

Test 2.3: Exposure to sub-zero temperature (-10°C)
Method: A sample was placed in the freezer compartment of a refrigerator and taken down to minus 10°C. The sample was inspected at 5°C intervals and held at minus 10°C for 2 days. The sample was then brought up to room temperature and tested for transmission, thermal and operational properties.
Results: The sample turned hazy at -5°C but operated normally when returned to room temperature.
Conclusion: The optical shutter is unaffected by below freezing temperatures and can be expected to be uneffected by the temperature extremes it is likely to experience in windowing applications.

3.3.3 Phase-Change Tests

Test 3.1: Width of temperature transition band from clear to opelescent white reflective °C.
Method: A sample with YSI thermistors attached was heated and solar transmission measured as a function of temperature.
Results: The sample completed the transition from 87% transparent to 20% transparent over 3°C (22°C - 25°C) fig. 3-3 . The width of the temperature threshold, 3°C, was the same for the opaque to clear

transition as for the clear to opaque. Samples with transition temperatures at 10°C to 13°C and 90°C to 93°C were also tested with the same results.

Conclusion: Optical shutters can be fabricated with transition temperatures at any point between 10°C and 90°C with transition occuring over 3°C.

Test 3.2: Sharpness of transition boundary.

Method: Part of a sample was masked with i.r. reflective aluminum tape. The sample was then heated above its threshold temperature with i.r. lamps. After transition the mask was removed and the sharpness of the transition edge measured. Similar tests were made with the optical shutter packaged in 3 mill transparent Aclar rather than 1/16" clear glass.

Results: The sample displayed a well-defined edge, going from opaque to clear over a distance of approximately 0.5 cm. The sample packaged in Aclar showed an edge of almost photographic distinctiveness. The difference was attributed to the greater thermal diffusivity of the glass.

Test 3.3: Cycle Life

Method: A sample was installed in a test rig consisting of a battery of i.r. lamps controlled by a time and counter. The timer turned the i.r. lamps on long enough to cause the shutter to change from clear to opaque. A fan then blew cold air over the sample until it returned to the clear state. Each such cycle (10 minutes) was registered on the counter. The sample was inspected every 500 cycles. More than 8,000 cycles have been undergone.

Results: No deterioration in performance was detected. A sample packaged in plastic film underwent more than 50,000 cycles without detectable deterioration.

Conclusion: The optical shutter when packaged in glass is not constrained in use by a limited cycle life.

Test 3.4: Effect of solvent escape.

Method: The aluminum and silicone edge seal was removed from two sides of a sample which was subsequently cycled through its phases.

Results: After two days of cycling the sample whitened permanently around the exposed edges. This white area gradually spread inwards. However, when the sample was submerged in a bath of solvent the sample regained its original properties.

Conclusions: The use life of the optical shutter is limited by solvent loss. Where properly sealed a 10 to 15 year life can be confidently expected in normal use. Samples packaged in plastic can only expect a 3 to 5 year life due to the relatively high permeability of plastic films even at 6 mil thicknesses. Saran (TM - DuPont) polymer, a good diffusion blocking material, might double this lifetime figure.

Test 3.5: Field Test

Method: A 12" by 18" sample of optical shutter mounted in the edge detail designed for the original preproduction prototype was adhered to a west facing window in Suntek's laboratory. The temperature of the surrounding glass, the room surface temperature of the optical shutter, room ambient and outside ambient were periodically monitored under various conditions. The operation of the sample was also monitored visually.

Results: The sample tested from clear to opaque from the edge. This phenomena was attributed to the variation in thickness of the optical shutter gel which was thinner at the edges than at the center. When installed behind green nir absorbing glass the sample was triggered by the glass temperature rather than room temperature.

In the clear state the temperature of the glass of the optical shutter was 3°C warmer than the surrounding window glass. In the opaque state the surface temperature of the optical shutter was 10°C warmer than the surrounding window glass.

A response time of typically less than 10 minutes was noted. This was attributed to the time taken for the sample to thermally saturate.

3.4 PRODUCTION EVALUATION

The optical shutter was dropped from the Superpane retrofit package for the following reasons:

1. Inclusion of the optical shutter raised total costs to an estimated $\$5.20/ft^2$ compared to $2.00 without it. Considering that in the major market areas for the retrofit package, the north-east and north-central, cooling is not a problem this additional cost could not be justified.
2. Poor fit with the production capabilities of window manufacturers. The solution of packaging the chemicals in welded plastic precluded use in view windows.
3. The additional weight ($3.66\ lbs/ft^2$) makes for a security problem in retrofit application.
4. The blanking out of view may be unacceptable to users in practice.
5. Incompatible with custom sizing. Wide variation in window sizes for retrofitting makes a restriction to standard factory sizes unacceptable.

Thus on technical, business and economic grounds the optical shutter has been dropped from the Superpane package as envisioned at the preproduction prototype stage. This led to a major effort to design a retrofit window system that incorporated the advantages of the original version in a more flexible and market responsive way.

It should, nevertheless, be emphasized that the optical shutter technology represents in itself a technical and economic advance in windowing technology that we expect may find application in new non-view windows, skylighting systems, greenhouse control and preventing overheating in both passive and active solar heating systems. However, the fact remains that it does not lend itself to do-it-yourself retrofit applications.

Large Scale Production Study

A major U.S. polymer company undertook on a free will basis, a production engineering analysis of the Optical Shutter on the understanding that the details of the analysis would remain proprietary to them. Consequently only the overall conclusions of this analysis are reported here.

Three different production methods were considered and one of them selected and taken through a more detailed chemical engineering analysis. It was found that the cost of coating the optical shutter material onto a supplied plastic substrate in small quantities, i.e. 12,000 square feet, was $1.50 per square foot. The material cost of producing the optical shutter packaged in plastic in large quantities, i.e. 13.5×10^6 ft^2 per year was estimated at $0.35 ft^2 with an investment in production equipment of $2.25 $\times 10^6$. It should be emphasized that this cost estimate does not include building facilities, overhead, marketing costs, R&D costs or profits. A more realistic factory FOB cost estimate would be in the region of $.70$ft^2$ in large quantities.

The integration of glass handling facilities with the polyester production line was found to pose serious problems. The solution of packaging the optical shutter material in a plastic film welded into a checkered pattern which could subsequently be sandwiched between glass by window manufactureres solved some of these problems but precludes the use of the optical shutter material in view windows due to the presence of the welding lines.

4.0 SUPERPANE

4.1 SUPERPANE TEST PROGRAM AND RESULTS

The standard Superpane retrofit design (Heat Mirror on flexible polyester substrate attached as an interior glazing with ½ inch air space) was subjected to an extensive testing program to determine its thermal efficiency, optical properties and response to temperature extremes and condensation. A limited prototype production run of 100 units measuring 12" by 18" of the standard retrofit was undertaken for test purposes. These samples used a mitred rather than an injection molded corner detail but were otherwise identical in materials and detailing with the proposed commercial design.

4.1.1 Thermal Tests

These tests were conducted using Suntek's insulation tester (see Instrumentation, Section 5). The test series included a number of configurations other than the glass/air gap/Heat Mirror for comparative purposes.

Figure 4-1

	Measured U values	ASHRAE Standards*
	BTU/ft^2 °F hr.	
1. Single sheet of 1/16 glass	1.15	1.13
2. Glass + ½ inch air gap + plain polyester film	0.65	
3. Two sheets of 1/16 glass + ½ inch air gap	0.59	.58
4. Heat Mirror laminated directly to glass	0.58	
5. Glass + ½ inch air gap + Heat Mirror facing outwards on polyester	0.34	.38 (for emissivity = .20)
6. Single sheet of glass + ½ inch air gap + aluminum foil	0.31	

* (Handbook of Fundamentals 1976)

These measured values can be compared with the ASHRAE standard value. Important results are that the application of the standard Superpane retrofit to a single pane window lowers thermal transmission from 1.13 to 0.32 BTU/°F hr ft. This compares with 0.58 BTU/°F hr. ft. standard for a double glazed window. Put simply, a window retrofitted with the Superpane has nearly twice the thermal performance of a standard double glazed window.

Secondly, the direct application of Heat Mirror alone to windows decreases thermal transmission losses from 1.13 to 0.58 BTU/°F hr. ft. or equivalent to a double glazed installation.

The test results cited in Figure 4-1 are extrapolated along with ASHRAE standard values to estimate performance for a number of fenestration systems in Figure 4-2.

The measured effect of air gap thickness on conductivity is shown in Figure 4-3. Figure 4-4 depicts solar and thermal transmission associated with a Superpane-equipped window and shows calculated temperature drops across various elements of the window for representative conditions.

The relationship measured between conductivity and emissivity is shown in Figure 4-5.

Figure 4-2

U-VALUES AND SOLAR TRANSMISSION OF WINDOWS,

SKYLIGHTS AND LIGHT TRANSMITTING PARTITIONS

FENESTRATION	U-value winter	U-value summer	% Solar Transmission
Typical Plastic Film	1.30(1)	1.09	88
Flat Glass			
Single Pane	1.13	1.06	88
Double Pane			
Air gap ¼ inch	0.65	0.61	76
Air gap ½ inch	0.58	0.56	76
Triple Pane			
Air gap ¼ inch	0.47	0.45	64
HEAT MIRROR glued on single pane	0.58	0.56	75
Glass Block (6x6x4 inches)	0.60	0.57	43
Storm Windows	0.56	0.54	74
HEAT MIRROR glued on storm windows*	0.33	0.32	65
SUPERPANE			
with single Heat Mirror	0.33	0.32	70.5
with double Heat Mirror	0.26	0.24	64

*assume no infiltration

(1) 40% IR transmission assumed.

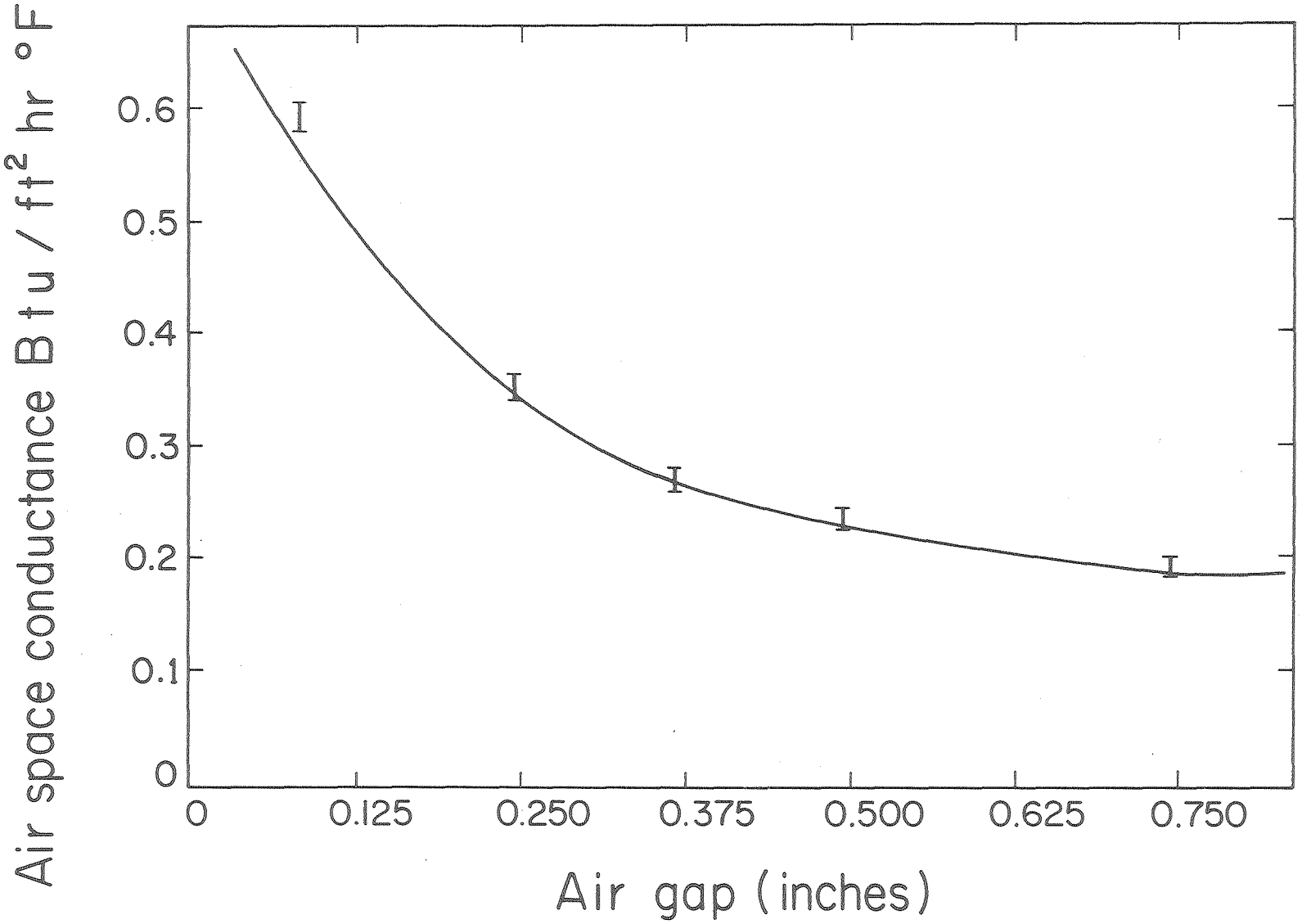

Fig. 4-3. Conductivity of superpane vs. thickness of air gap with one surface emissivity of 0.1 and vertical orientation.

XBL798-2656

Fig. 4-4.

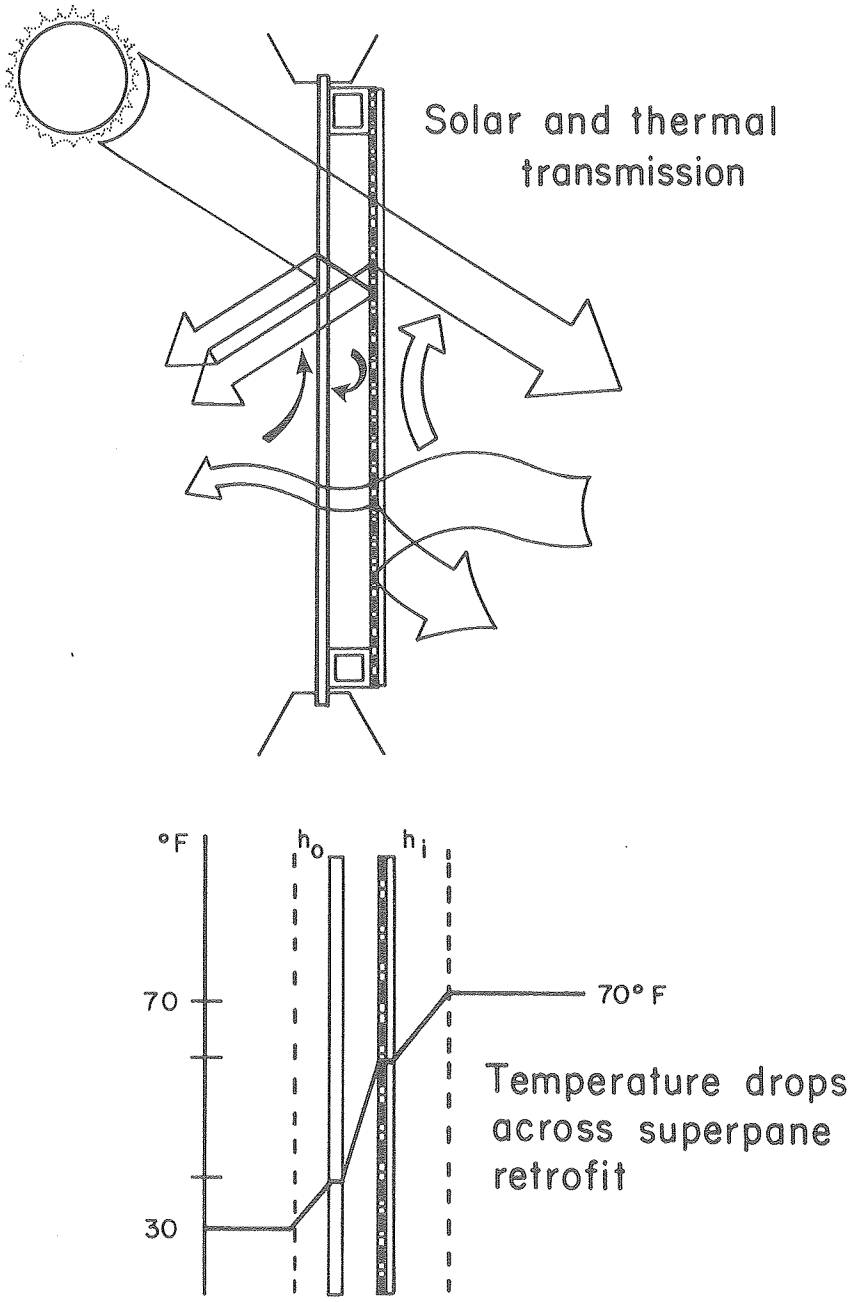

XBL 798-2657

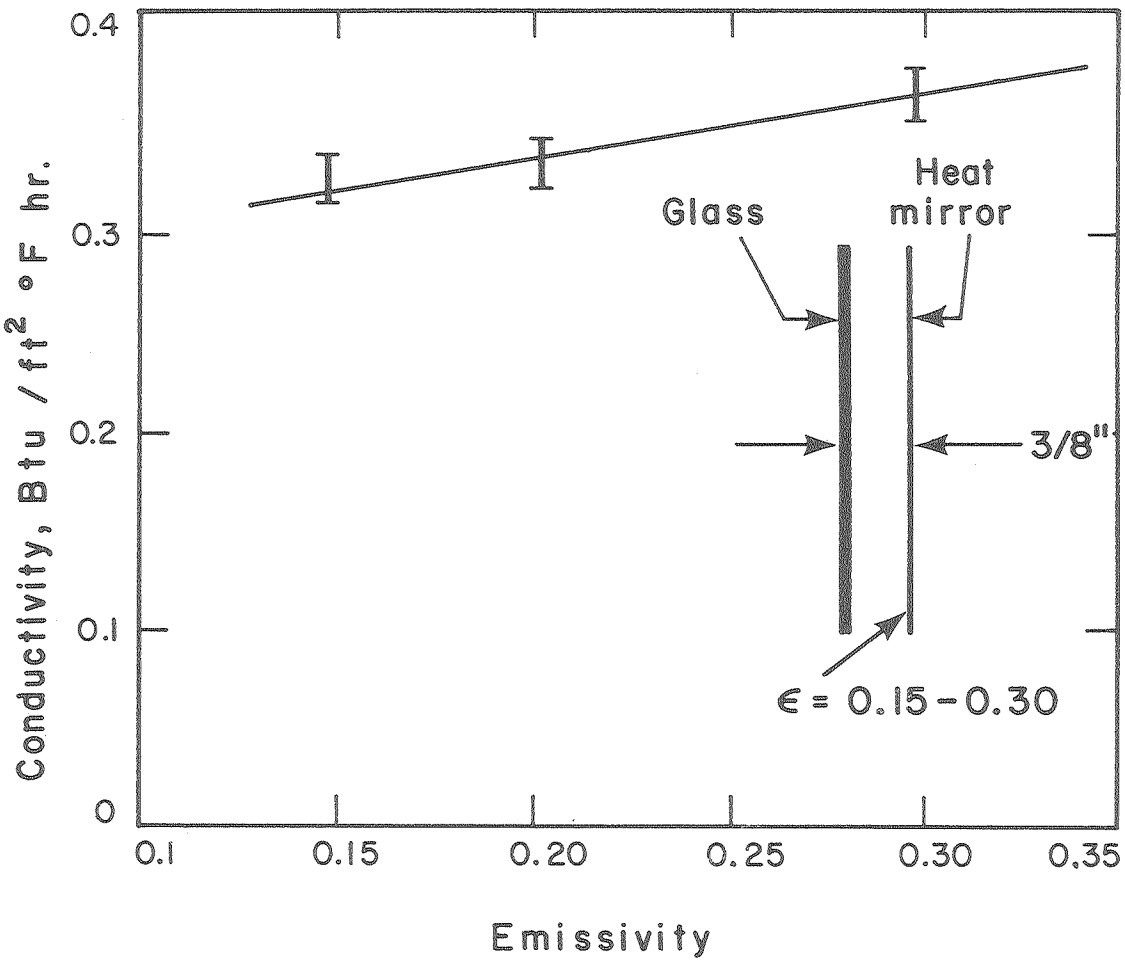

Fig. 4-5. Thermal conductivity of superpane vs. emissivity of second surface with 3/8" air gap — 90° hot side, 35°F cold side, and vertical orientation.

XBL 798-2658

4.1.2 Optical Tests

The transmission losses for each component of the Superpane retrofit are shown below.

Figure 4-6	% transmission
1. Clean glass	87
2. Substrate film	89
3. Heat Mirror coating	91
4. Transparent edge*	90
5. Transmission of Superpane only	81
6. Transmission of window with Superpane	70.5

* Transmission losses due to the edge detail are based on a (4' x 3') window with a ½ inch edge detail.

The overall transmission is 70.5% of incident sunlight. The reduction in transmission due to the presence of the retrofit is 19%.

View

On a well-installed retrofit the free-span film is hardly noticeable when viewed through directly. The film, in the 'Daylight' version, has no effect on color values and does not induce optical distortion. However, when poorly installed the film becomes more noticeable due to waviness and associated high lights. When viewed at glancing angles of 15° or less the film exhibits a slight irredescence.

4.1.3 Mechanical Tests

Adhesion

Adhesion of P.V.C. edge detail to glass over 120°F temperature change: A 4' length of the P.V.C. extrusion was mounted on a 1/16th inch glass using acrylic adhesive. The mounting was done at room temperature. The sample was subsequently placed in a refrigerated enviornment at -10°F. Then shear and real strength tests were conducted at each end of the temperature range. After thermally cycling the sample 10 times it was found to be unaffected.

Creep of P.V.C. edge under load

A 4" P.V.C. extrusion was glued to 1/16th inch clear glass using 10mil acrylic adhesive. The sample was mounted vertically in a jig and loaded with 16 lbs at room temperature (68°F) for 5 days. At the end of this period the sample was examined for creep, which was found to be less than .010".

Hermetic seal of installed units

The standard unit was submerged in a water bath until it was covered by 3 inches of water. It was left for 3 days and subsequently inspected for leakage. An identical test was conducted using the magnetic version. No leakage was observed in either case. It was concluded that when properly assembled and installed the retrofit unit is air and water tight.

Condensation Control

The installation of the Superpane internal retrofit has the effect of lowering the surface temperature of the window glass in cold weather below what it would be without it. For example at an outside temperature of 0°F and an internal temperature of 70°F at 50% R.H. then the

dew point is 50°F. In order to prevent condensation under adverse conditions water vapor content in the enclosed air mass must be less than 0.002 lbs of water per pound of dry air. This can be achieved by the addition of dessicant pellets or strips installed along the bottom of the standard retrofit unit. This is a proven method of dealing with sealed window condensation. (See Windows, H.E. Beckett, New York, 1974)

4.1.4 Accelerated Aging Tests

Adhesion

Adhesion of standard edge detail to glass after extended exposure to high intensity solar radiation: Six 4" lengths of P.V.C. extrusion was adhered to 1/16 inch glass and exposed to high intensity radiation in Suntek's solar simulator for 100 hours, equivalent to about 10 years typical solar exposure. The samples were subsequently tested for sheer and peel strength, which was found to be reduced to about 40% of initial values, but still adequate. These test values were: sheer: 12 lb/in^2, peel: 9 lb/in width.

4.2 PRODUCTION EVALUATION OF RETROFIT DESIGNS

With the exception of the transparent selective surface all components used in the standard Superpane retrofit unit are currently available on an off-the-shelf basis in large quantities. The manufacturing technologies employed; roll coating, extrusion, and injection molding lend themselves to high speed production (Fig. 4-7)

Customized pre-assembly of retrofit units does not require any specialized equipment or skills. Alternatively, prepackaged Superpane kits for home assembly can be manufactured using standardized edge lengths and rolls of Heat Mirror. Again no specialized equipment or skills are required.

Do-it-yourself installation appears to be feasible although field tests involving user assembly and installation are required to confirm this point.

Fig. 4-7. Superpane Production Flow Chart

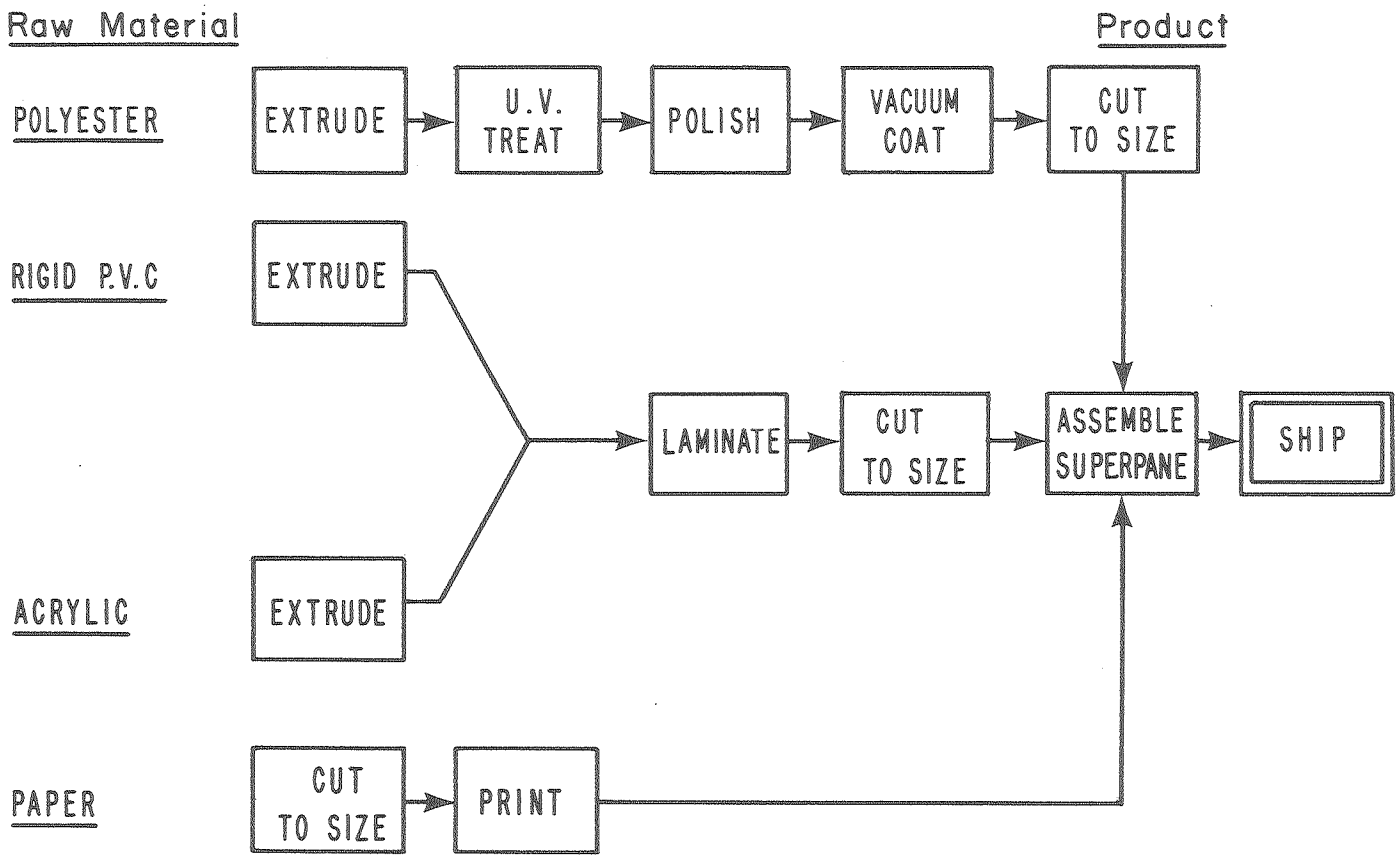

XBL798-2665

Increasing sale of solar control films through home improvement centers seems to establish the ability of consumers to install window film products.

The rigid sheet and magnetic versions of the Superpane package require skilled installation but is judged to be within the skills of the service section of the window market (solar control film installers, storm window manufacturers, window cleaners, etc.)

Figure 4-8 shows component material costs relevant to the various retrofit designs which are then combined to show total material costs for each design.

These prices reflect current quotations (July 1977) from manufacturers for large quantities of the components used in the various Superpane designs. Wastage and the labor involved in assembling the retrofits is not included. Nor are packaging costs, storage costs, distribution costs, advertising costs and associated mark ups. When estimates for these are included the standard Superpane can be expected to retail for \$2.00 $\pm$ 10¢ ft^2 or at approximately 3 times base materials cost. This conforms with commercial experience. The other designs would be proportionately priced. This would result in approximate retail prices shown in Figure 4-9.

Figure 4-8

Component Materials Costs

1.	3/8" P.V.C. extrusion	$0.06 lin ft.
2.	½" P.V.C. extrusion adhesive	0.08 lin ft.
3.	Acrylic adhesive	0.05 lin ft
4.	Magnetic strip	0.12 lin ft.
5.	Metal edge (with adhesive)	0.08 lin ft.
6.	Injection molded P.V.C. corners	0.01 each
7.	3/8" neoprene foam	0.10 lin ft.
8.	90 mil P.V.C. sheet	0.34 ft^2
9.	90 mil acrylic sheet	0.59 ft^2
10.	60 mil acrylic sheet	0.46 ft^2
11.	1/16" glass	0.32 ft^2
12.	Optical adhesive	0.01 ft^2
13.	Heat Mirror on polyester film	0.50 ft^2

Superpane Materials Costs

1.	Standard Superpane edge (1+3 above)	0.11 lin ft.
2.	Magnetic P.V.C. edge (1+3+4+5 above)	0.31 lin ft.
3.	Neoprene foam edge (3+7 above)	0.15 lin ft.
4.	Magnetic foam edge (3+4+5+7 above)	0.35 lin ft.
5.	Standard Superpane (4' x 3')	0.63 ft^2
6.	Magnetic Superpane	0.87 ft^2
7.	Rigid Superpane (90 mil acrylic)	1.22 ft^2
8.	Rigid Manetic Superpane (90 mil acrylic)	1.45 ft^2

Expected Retail Prices Figure 4-9	$/ft^2
1. Standard Superpane	$2.00
2. Standard magnetic Superpane	2.60
3. Rigid Superpane	3.75
4. Rigid magnetic Superpane	4.40
5. Economy Superpane	1.60

The two removable designs employing magnetic edge details are likely to require professional installation as noted earlier. Assuming shop assembly included in the prices in Figure 4-9, professional installation may add $.50 per square foot, allowing 30 minutes per window and labor (including overhead and profit) at $12.00 per hour for a typical 3' x 4' window.

5.0 COMMERCIALIZATION PLANS

5.1 The Energy Conservation Market

In order to formulate market entry strategies, it is first necessary to characterize the energy conservation market, and more specifically, the window insulation segment of that market.

5.1.1 Market Size and Distribution

Employing square footage of glass consumed as the best measure, the annual window market during the period 1970-1974 is estimated below:*

Figure 5-1

	Million sq.ft.	Percent
1 - 2 family homes	230	24.9
Apartments	50	5.4
Mobile homes	30	3.2
Prime window replacement/remodel	70	7.6
Storm windows - new	30	3.2
Storm windows - replace/remodel	290	31.4
total residential	700	75.7
Non-residential - new	130	14.1
Non-residential - replace	95	10.3
total non-residential	225	24.3
total	925	100

These data suggest that residential markets are approximately triple non-residential markets and that storm window additions to existing residences dominate the residential window market. Since these data are from a pre-energy crisis period, storm window installations are undoubtedly understated as a benchmark for future window insulation market estimates.

- - -

* The data cited here was compiled by Public Response Associates, San Francisco. Documentation of these data are contained in Appendix B. Because of the number of sources employed and the occasional data inconsistancies encountered,analytical judgement was required to produce the summary data. Thus, some uncertainty exists in these summary data.

Because the requirement for window insulation varies with climatic conditions, it is useful to examine the window market by geographic region.

Figure 5-2

	Million Square Feet per year			
	N. East	N. Central	South	West
1 -2 family homes	27	50	98	55
Apartments	8	10	20	12
Mobile homes	3	6	15	6
Prime window replacement	20	20	19	11
Storm windows - new	4	9	12	5
Storm windows - remodel	102	122	49	17
Total residential	164	217	213	106
Non-residential - new	27	33	43	27
Non-residential - replacement	20	24	32	19
Total non-residential	47	57	75	46
Total	211	274	288	152

The north east and north central regions account for 74% of storm window installation while representing only 34% of new residential construction. Rates of equipping new residential windows with storm windows range from 9% in the west to 18% in the north central region. In a post-energy crisis period, it is reasonable to expect the residential window insulation market will double to approximately 600 million square feet per year, three-fourths of which will be in the north central and north east. While this market estimate is predicated on storm window sales, it should be noted that market penetration by Heat Mirror or Superpane is not limited to substitution. As noted elsewhere, Heat Mirror or Superpane may be used in addition to storm windows, further reducing heat loss. The extent of penetration will depend on factors discussed below. Retrofit saturation will, of course, be approached as some point. Data compiled by PRA indicates storm window saturation at 86% in the North East, 90% in the North Central and 91% in the North Atlantic regions; the area of direct competition between Heat Mirror and storm windows in the coldest sections fo the country seem limited. In these areas, however, addition of the Heat Mirror to existing storm windows provides a virgin market; hence, saturation is unlikely to occur for many years.

5.1.2 Economic Considerations

Logically, consumer investment in window insulation should relate to resulting fuel savings. In theory if the discounted cash flow return of the initial investment exceeds the cost of capital when considered over the lifetime of the insulation the consumer should make the investment. This is referred to as "life cycle costing". While there is some evidence that professional building owners and managers will utilize this approach, there is little reason to believe that it will be followed by homeowners. Instead, it is likely that homeowners will apply a more stringent economic test for several reasons.

Single family residences change ownership approximately every four years. While conceptually, the value of window insulation should be capitalized and reflected in the selling price, there is no present evidence that this is so (i.e. - that a storm window equipped home will sell for more than an otherwise identical, non-storm window equipped home). Therefore, the skeptical homeowner is likely to base his economic judgement on return on his fuel bills. Thus, it seems prudent to conclude that window insulation must have a payback of less than four years.

While theory suggests that economic decisions should be predicated on return on investment, experience with consumer credit over the past several decades suggests that financial ability to buy is often a more important determinant than return. Thus financing mechanisms must be considered.

An interesting analogy may be found in the growth of the residential wall to wall carpet industry. Growth in this industry was slow until the concept was introduced of installing and financing carpet as part of new residential construction. The incremental addition to a 30 year mortgage payment was miniscule, and carpet sales grew rapidly.

Financing considerations suggest several approaches. First, the percentage of new homes equipped with window insulation should rise as consumers become more energy-conscious and developers increasingly use conservation and fuel savings as a "sales peg". This is likely to be reinforced by building code requirements. This will be significantly assisted by long term mortgage financing automatically available for new construction. It is likely that this will result in a more than two-fold increase in window insulation equipped new construction.

Second, a different approach is required for the much larger retrofit market. The President's announced plans to not only provide tax credits for energy saving investments but also to provide financing via utility company billing seems responsive to this need. While bankers will undoubtedly argue that this financing could be provided through traditional home improvement channels (e.g. banks), the psychological advantage of combining a window insulation payment with a lower fuel payment on the same bill seems significant.

Thus, our market penetration projections depend on both rapid payback and convenient financing mechanisms.

5.1.3 Payback Periods

Payback will vary, of course, with climatic conditions. Assuming a 1980 fuel oil price of 61¢ per gallon and a $2.00/square foot cost for Superpane, a saving of 12¢ per square foot per 1000 degree-days (below 65°F) will result if a single glazed window is retrofit. Annual savings and payback periods are shown below for representative U.S. cities.

Figure 5-3

city	annual saving per square foot	payback period
Washington, D.C.	$.59	3.4 yrs
Mineapolis, Minn.	1.01	2.0
Cleveland, Ohio	.76	2.6
Denver, Colo	.75	2.7
Topeka, Kan	.62	3.2

The four year payback test is met for all of these cities as would also be the case for any city experiencing more than 4200 Degree Days. Thus, Superpane as a retrofit for single glazing is economically feasible in areas outside the Sunbelt.*

It should be noted that these calculations ignore insulating value resulting in reduction of summer air conditioning loads. While solar insolation is larger than conduction, the latter factor is not negligible. Therefore, the energy conserving estimates presented here are conservative. By modification of manufacturing process variables, it is also possible to produce a Heat Mirror with any desired level of attenuation of solar transmission, i.e. a solar control film - Heat Mirror composite. The would significantly enhance summertime savings (although at the expense of winter solar heating).

5.1.4 Life Cycle Costing

We have suggested earlier that the residential homeowner is unlikely to utilize life cycle costing. It is instructive, however, to examine the results of this theoretically more sound analytical approach. A home owner with 300 sq. ft. of fenestration would save $1,860 over 10 years compared with an initial cost of $600 in a 5000 Degree Day climate. Using an interest rate of 8%, this savings represents a present value of $1208 or double the initial investment. This calculation assumes no further rise in the cost of fuel beyond 61¢ per gallon after the predicted 15% annual compound increase until 1980.

- - -

*Our estimate is conservative in comparison with others. For example Bart Gauger of the State of California Energy Resource Conservation and Development Commission is quoted as stating that insulating glass is cost effective down to 3000 degree-days. The installed cost of 1" clear Thermopane insulating glass is approximately $4.25. Source - Giannini and Siefert - "An Investigation of Commercially Available Thermal Insulating Glass for Pacific Gas and Electric Company", Feb 1, 1977. V.L. Giannini and Co., Los Angeles.

Fig. 5-4. Normal number of degree days per year. Adapted from "Air Conditioning, Heating, and Ventilating."

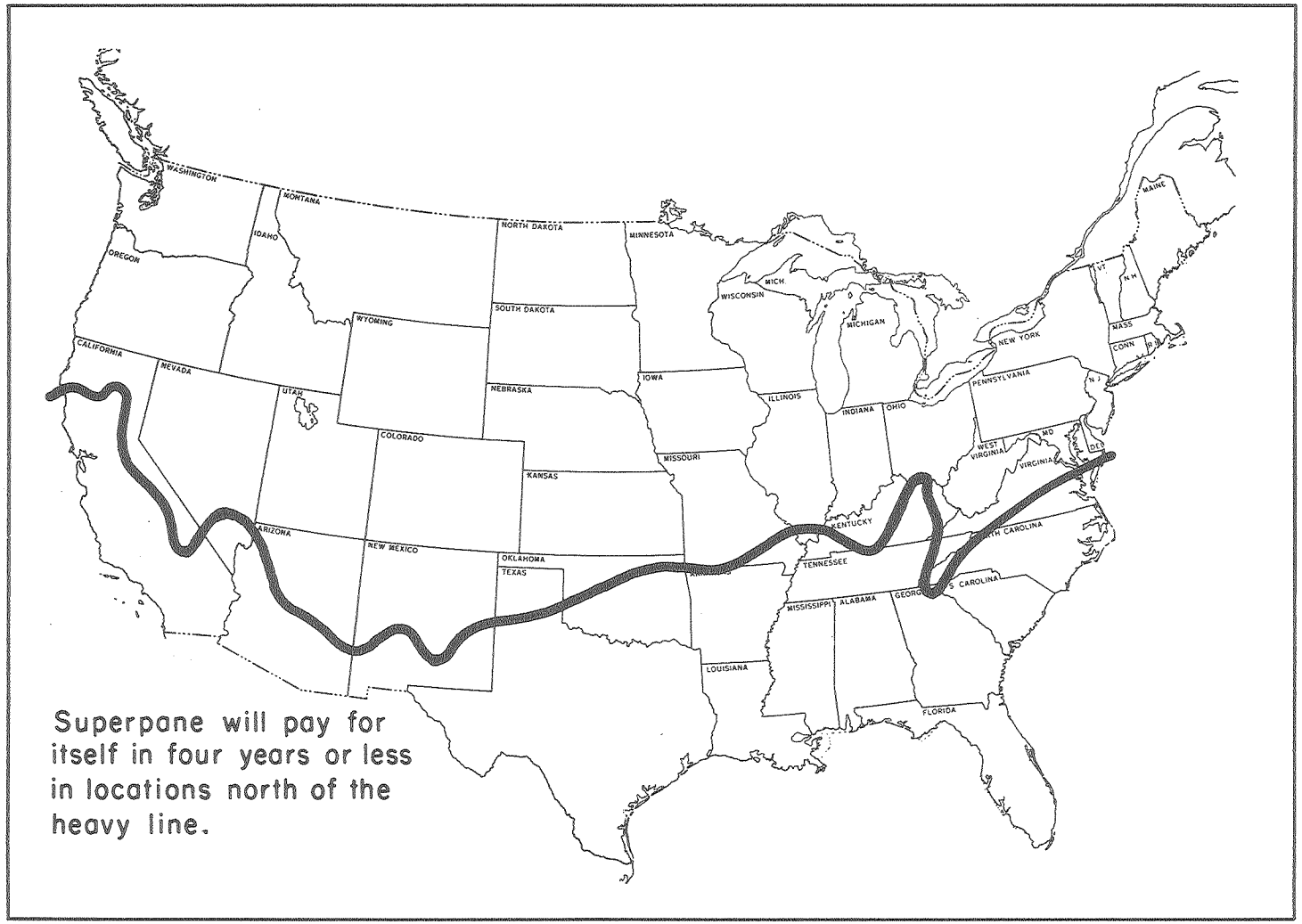

Reprinted with permission from Strock & Koral: "Handbook of Air Conditioning Heating and Ventilating - 2nd Edition. Published and copyrighted 1965 by Industrial Press Inc.

XBL799-2683

5.1.5 Consumer Attitudes

It has been repeatedly demonstrated that consumer behavior is seldom determined by rational economic considerations alone. In considering window insulation, studies suggest at least three other potential behavior determinants that seem to effect the window insulation market - energy crisis credibility, consumer confusion and esthetic/psychic factors.

Private studies have suggested that the energy crisis is not yet credible to consumers despite dire predictions from political leaders and the scientific community. Consumer response has thus far been limited. This is documented by continually growing auto mileage and gasoline consumption.

It has been argued that this is the classical problem of failure by individuals to protect the "commons"; that is, the belief by each individual that despite the severity of the problem, his personal contribution to its solution through conservation is so tiny as to be insignificant - hence, he reasons there is little purpose in modifying his energy consumption patterns.

Recent evidence from the Northern California water shortage suggests, however, that consumers will modify their behavior when the need to do so is credible. Two seasons of subnormal rainfall in the West reduced resevoirs far below normal levels resulting in widely publized pleas for water conservation. Year to year comparisons show consumption reduction from 30% to 50% for various Northern California counties.

While sanctions were employed in some counties (e.g. Marin) equally striking results were obtained where no sanctions were employed (e.g. Santa Clara)

It is likely, therefore, that the rate of market penetration will be significantly affected by yet to be established credibility. Market studies performed by Public Response Associates for Suntek under the present contract have also suggested consumer confusion related to window insulation. This results from several causes. First, the technical considerations are complex. Window heat losses occur from conduction, convection and infiltration. Summer heat gains result from insolation and conduction. Second, product effectiveness has been misunderstood. For example, interviews with professional buyers as well as consumers repeatedly indicated confusion between solar control films (aluminized Mylar) and Heat Mirror since both are films for installation on windows. This confusion persisted even though the two kinds of films are opposite in their effects and purposes. Third, the relative role of windows in residential energy conservation does not seem to be well understood. While storm windows (or double glazed windows) are traditional in colder regions, the excessive fenestration found in somewhat more temperate regions results in major energy losses but storm windows are rarely considered.

Finally, esthetic/psychological considerations may be important. Interviewees repeatedly asked if Heat Mirror could be tinted like the solar control films (this would of course, reduce transmission and hence winter solar heating). The basis of these questions may be the perceived esthetic attractiveness of tinted films or it may be a desire to purchase a product that is visible and impressive to visitors. This latter view was reinforced by interviewee preference for the Superpane configuration over the direct Heat Mirror configuration. While this is a good choice based on heat transfer consideration, it seems likely that the expressed preference was based on visual perception. Thus, Heat Mirror based window insulations are undoubtedly low in esthetic/psychological appeal and can be expected to experience little of the consumer behavior witnessed with CB radios or pet rocks!

5.2 MARKET ENTRY

Successful market entry must relate markets, distribution channels, educational and promotional methods, prices or costs, product forms and organizational capabilities.

5.2.1 Markets

Windows represent the primary market under consideration. The window market may be segmented by building type:

Single family
Apartments
Mobile homes
Commercial
Office
Industrial

Further segmentation is, of course possible. A second segmentation dimension is new construction versus retrofit.

In addition to these primary market, important secondary markets have been identified. These include greenhouse glazing and solar collector glazing.

Rapid increases in fuel bills coupled with increasing assignment of greenhouses to interruptable service by utilities is creating a growing need for a transparent insulation material. 1974 greenhouse estimates of millions of square feet under cover for vegetables and bedding plants were:

glass	63.3
Polyethene	46.0
Fiberglass	17.8

Solar collector manufacturing seems to be rapidly growing with application apparently limited primarily by cost considerations. Use of a transparent insulation (Heat Mirror) as a glazing material will greatly improve collector efficiency and accordingly, reduce collector square footage requirements and hence costs.

The greenhouse and solar collector markets are outside of the scope of this contract and have not been studied in any depth.

5.2.2 Distribution Channels

Window insulation may flow through several distribution channels. Figure 5.2 illustrates the distribution structure identified by Public Response Associates of the window and window glass industry which is probably the best available existing model for defining distribution channels for window insulation.

The flat glass industry is dominated by three companies which account for 85% of the flat glass manufactured in the United States. While the accompanying flow-chart shows the channels that are followed to reach final usage for windows, the picture becomes somewhat hazy upon close inspection. That is, nearly every company in the industry can be placed in more than one spot on the chart; and even those companies which are competitors in one area may also deal in other, differing areas.

In contrast to the flat glass industry, where only a few companies are manufacturers, the window manufacturing industry (both metal and wood windows) consists of many small, regional or local companies.

Some general statements about the distribution of flat glass for residential and non-residential uses can be made:

Residential Application

1. Most flat glass (70% - 80%) is shipped directly from the

Fig. 5-6. Structure of window and window glass industry.

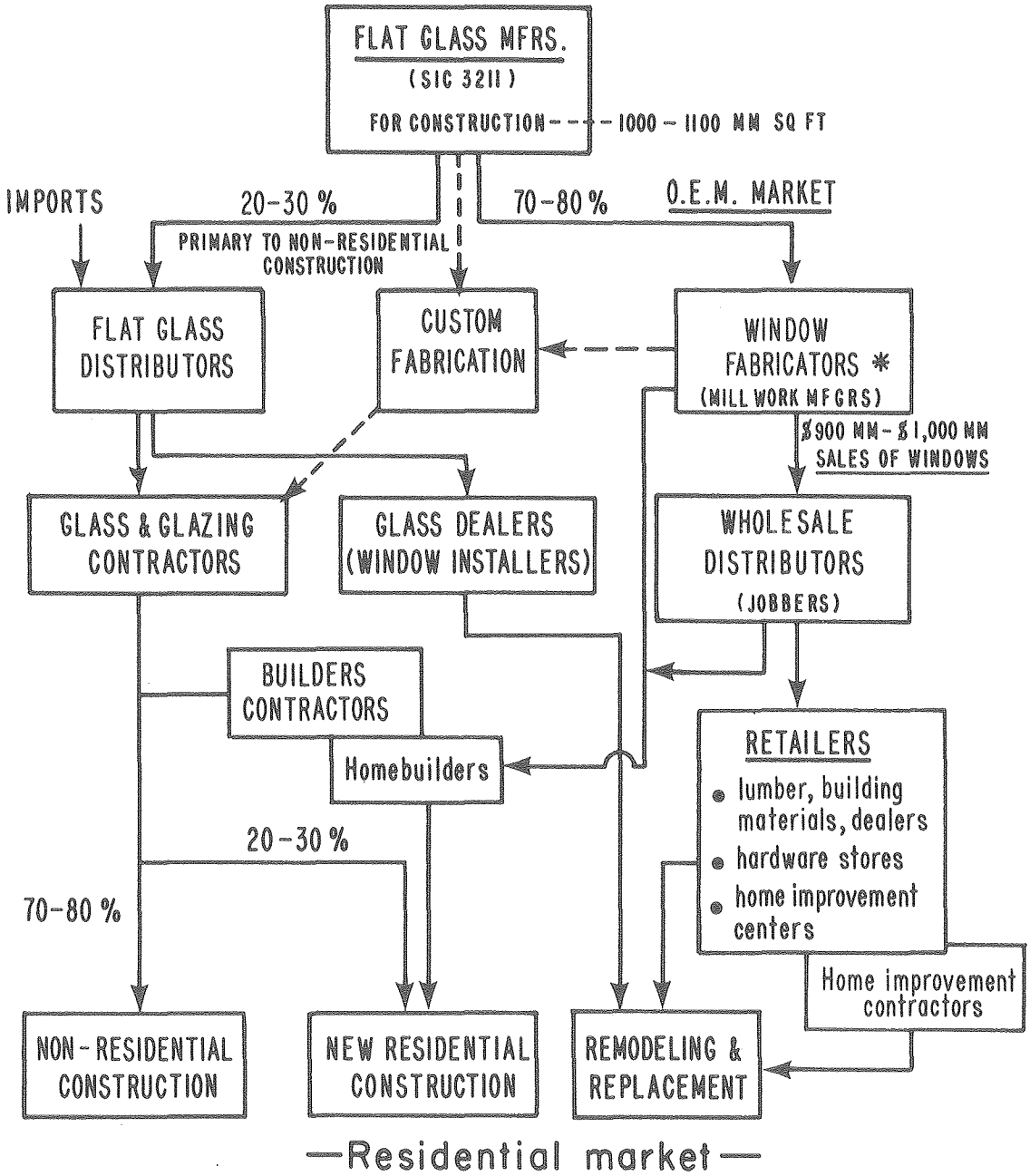

* *Including storm windows*

XBL 798-2661

flat glass manufacturer to the window fabricator.

2. The window fabricator then distributes directly to the homebuilders or retailers for both new construction, replacement, and remodeling work.
3. Only the smallest window manufacturing companies (about 10% - 20% of all fabricators) purchase their glass from distributors.
4. Glass dealers and window installers for the remodeling and replacement market are mostly supplied by flat glass distributors, with some buying from window fabricators and wholesale distributors (jobbers).

Non-Residential Applications

1. Most flat glass is shipped to window manufactures and contractors via glass distributors for new construction, remodeling and replacement.
2. Some major glass manufacturers have their own distribution network or contract with specifically selected independent distributors to handle the product in a region.
3. Most of the glass and glazing contractor volume (70% - 80%) goes to non-residential construction. The remainder is shipped to building contractors and homebuilders for new construction.
4. In the residential, as well as the non-residential market, custom fabrication is done by both flat glass manufacturers and window fabricators.

Several examples can further illustrate the overlapping that occurs in the industry:

1. PPG, the largest flat glass manufacturer, acts as its own distributor in the East, but contracts with independent distributors in the West.
2. Cobbledick-Kibbe, a California firm, is a flat glass

distributor, a glass contractor for new construction (mostly non-residential) and a retail dealer for replacement glass.

3. In contrast, a local competitor to Cobbledick-Kibbe as a flat glass distributor, Western Plate & Window Glass also manufactures metal windows, and is a wholesale distributor of windows.

By examining this existing distribution structure, certain tentative conclusions about distribution channels for window insulation may be reached.

New Construction

Residential - Heat Mirror will be applied by window fabricators and sold to home builder-contractors

Commercial - Office - Industrial - Heat Mirror will be applied by glazing contractors (or specialized window insulation contractors).

Existing Construction

Residential - Superpane will be fabricated on a custom order basis (like storm windows or screens) by existing window fabricators or departments of major retailers and sold to homeowners via major retail, mail order, hardware and home improvement outlets. Some sales of Heat Mirror for direct application by homeowners through these outlets may be expected; however, most residential direct application will be professionally installed by glass dealer-installers.

Commercial - Office - Industrial - As for new construction Heat Mirror will be applied by glazing or specialized contractors. Some installation of Superpane fabricated by window fabricators may be anticipated.

Detailed study of these channels of distribution has been beyond the scope of this contract. These projected channels require confirmation and establishemnt of requirements for each segment (specifications and prices).

5.2.3 Education and Promotion

Our analysis of market considerations has suggested tha successful introduction of window insulations will require considerable consumer education. This education is required on two levels.

Product Need- Beyond establishing the credibility of the energy crisis the consumer must come to understand window insulation as a solution to the national energy problem and his specific fuel costs.

Product Application - The consumer must be trained in where to acquire the product, and if interested in "do-it-yourself" installation, he must be educated in installation procedures. Installation education is relatively trivial for Superpane installation but is significant for direct Heat Mirror installation.

Product Costs - Product costs are the function of many direct cost elements and assumptions concerning volumes, methods, sales levels, etc. To illustrate the product cost structure, we have chosen a three level distribution structure with three product configurations.

Heat Mirror Roll Goods Manufacturer - Produces Heat Mirror in 6' wide by 4000' rolls for sale to a single Heat Mirror converter at a selling price of 50¢ per square foot. (See Section 2.5 Heat Mirror Production Costs for the basis for this selling price.)

Heat Mirror Converter - Using the Heat Mirror in roll goods form as an input, the converter serves three markets:

Fabricates Superpanes in custom sizes for major retailers at a selling price of $1.40 per square foot.

This selling price is based on:

Heat Mirror	50¢
Other materials	24¢
Labor, overhead and profit	66¢

Packages Heat Mirror for "do-it-yourself" installation for major retailers at a selling price of 90¢ per square foot.

This selling price includes:

Heat Mirror	50¢
Other Materials	9¢
Labor, overhead and profit	31¢

Packages Heat Mirror for glazing contractors in intermediate rolls at a selling price of 70¢ per square foot.

This selling price includes:

Heat Mirror	50¢
Other Materials	3¢
Labor, overhead and profit	17¢

Superpane Retailer - Sells custom sized Superpane to consumers for "do-it-yourself" installation a a selling price of $2.00 per square foot. This provides a 30% markup to the Superpane retailer.

Heat Mirror Retailer - Sells Heat Mirror packaged for "do-it-yourself" installation to consumers for a selling price of $1.35 per square foot. This provides a 33% retailing markup. At this price, the insulating value per dollar is approximately the same as for the Superpane configuration. Hence the same payback expectations would pertain.

Glazing Contractor - Professionally install Heat Mirror for consumers for an installed selling price of $2.50 per square foot. This provides the installation contractor with $1.80 per square foot for his labor, overhead and profit.

This three level product cost structure is illustrated in Figure 5-3

Product Forms - Our commercialization analysis has thus far considered only two product forms - Superpane and direct Heat Mirror application to the glass pane. In practice, we would anticipate a more complex array of product forms.

Earlier in this report we described both permanent and removable methods of installing Superpane. We have also described how Heat Mirror may be used to improve the thermal performance of double glazed sealed windows and storm windows as well as single glazed windows. Market studies have suggested that it may be desireable to tint Heat Mirror for certain applications. Removable Superpane may utilize interchangeable clear and tinted material.

Secondary characteristics may also be significant for certain applications. The plastic Heat Mirror substrate bonded to the window significantly improves window security. A revision to the model building code presently under consideration would require residential windows to withstand an impact of 74 foot-pounds without shattering.

Fig. 5-7. Three Level Product Cost Structure

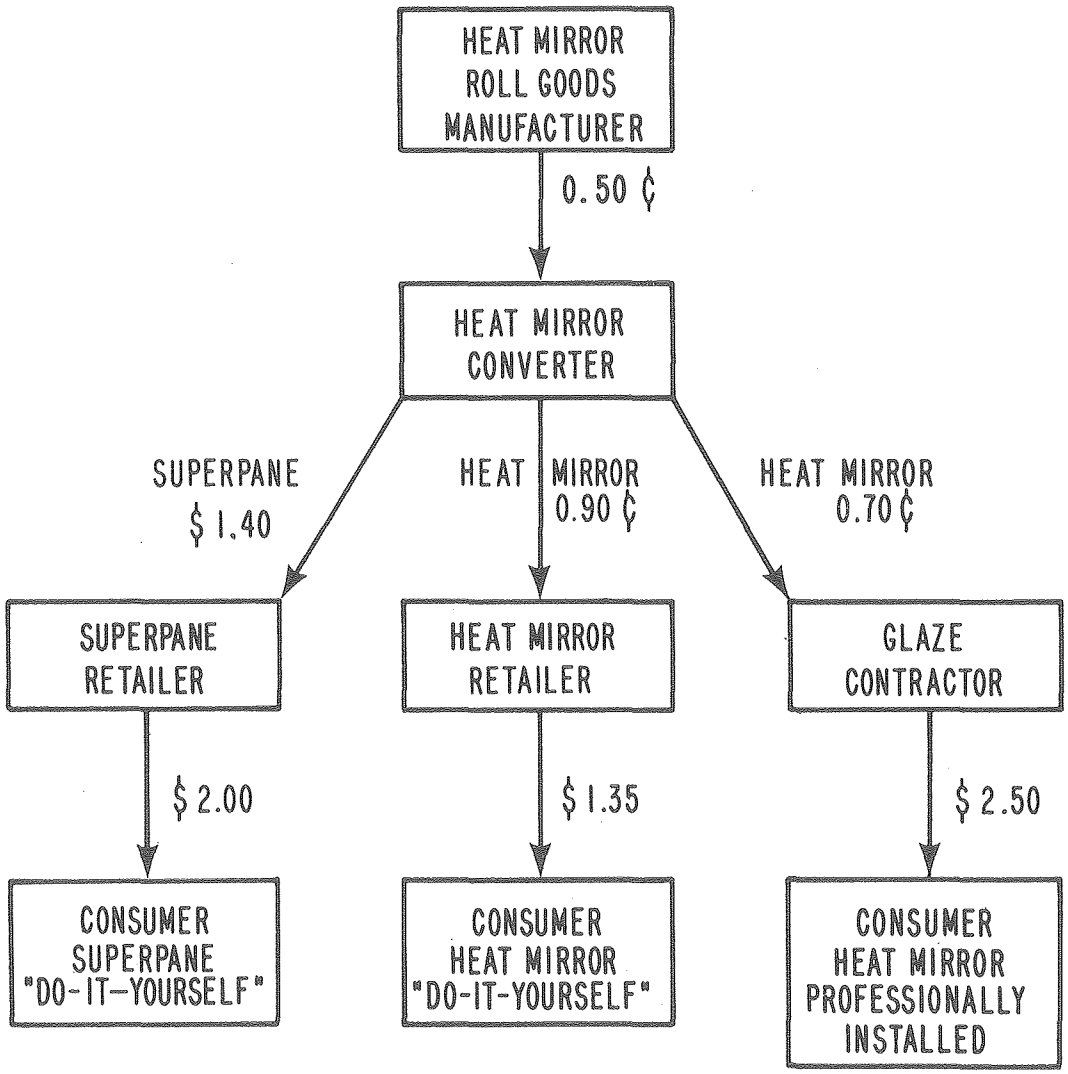

XBL 798-2662

Selection of a suitable gauge substrate should assure fulfilling this requirement.

Heat Mirror is also electrically conductive. Specialized applications requiring heating for defogging or defrosting or for electromagnetic shielding may find this to be a useful characteristic.

Finally, Heat Mirror may be bonded to complex shapes such as skylights or to formed plastic windows.

5.2.4 Required Organizational Capabilities - For successful market entry, an array of capabilities appears to be required. These capabilities may be grouped in two categories - manufacturing and marketing.

Manufacturing - attributes are:

High technology - thin film vacuum deposition at state of the art levels with continuing technological change occuring until technology matures.

Non-labor intensive - Highly automated production requiring skilled personnel at a rate of less than ten employees per million square feet of annual production capacity.

Moderately capital intensive - Capital investment of approximately one dollar per square foot of annual capacity required.

Location independent - High value-to-weight ratios of raw materials and finished goods is sufficient to obviate location as an important consideration.

Marketing-attributes are:

Distribution - Varied, multi-level channels for both professional and "do-it-yourself" installation.

Promotion - Extensive consumer education required

Conversion - Low to moderate technology level

Product Design - Building applications "know how" and styling capability required.

Image - Established image as a provider of high quality materials for buildings is desireable.

Market Research - Good capability to identify the needs of each market segment is important.

Based on the analysis of attributes summarized above, Suntek has initiated exploration of three alternative market entry strategies.

1. Major building product company - Suntek has identified a group of companies appearing to possess all of the desired marketing attributes and has initiated selective contacts within this group. All of the selected companies are public corporations and are in the annual sales range of $100 million to $3 billion.

2. Specialized window products company - Suntek has also identified and entered into discussions with several companies who are specialists in the window field but lack the size and strength of companies in the first category. This lack may be offset by superior knowledge and concentration of resources in the specific market of interest.

3. New Company - Suntek has been approached by several successful venture capitalists who have suggested establishing a new company for commercialization of Superpane and Heat Mirror. While lacking the in-place capability or resources of the first two strategies, this approach has the advantage of permitting single minded dedication to the new venture without compromise or trade off with the needs of existing products or businesses.

Suntek has elected to explore each of these strategies in parallel based on the conviction that no one of the three is superior to the others under all conditions. Therefore, the specific details of a given strategy are judged to be potentially more important than the concept.

5.3 COMMERCIALIZATION SUMMARY

A window market potential of 600 million square feet per year of transparent insulation exists resulting in potential sales of $500 million to $1.5 billion, depending on product configuration mix.

Secondary markets for transparent insulation have been identified in the greenhouse and solar collector fields.

Extent and rate of penetration of the potential market will depend on:

- Payback periods under four years
- Convenient fincancing mechanisms
- Building code insulation requirements
- Regional climatic considerations
- Consumer perceived energy crisis credibility
- Fuel Costs.
- Effective promotion and education
- Enhanced esthetic and psychological appeal

Window market is many-segmented, requiring a number of multi-tier distribution channels.

Products cost to the consumer will range from $1.35 to $2.50 per square foot, depending on product configuration and installation responsibility, fulfilling the payback requirement.

Appropriate manufacturing and marketing attributes are required.

"Partnership" with a major building products company, with a specialized window products company or establishing a new dedicated company appear to represent viable strategies which are being explored.

APPENDIX A

INSTRUMENTATION AND

TEST PROCEDURES

1. THERMAL RESISTANCE

The device takes a sample size up to three feet square and up to 12 inches thick. This large size is necessary to avoid edge effects when studying convection cells and the initiation of convection in large cells.

The sample is subjected to a temperature drop, with the higher and lower temperatures ranging between 50°C and 3°C. The sample can be maintained in any orientation with the hot and cold sides facing either up or down.

Unlike the conventional guarded hot plate or similar designs which measure the rate of energy passing through the sample, our design is based on two constant temperature sources and measures the temperature drop across a known insulation and the unknown sample. It is thus a "voltage" rather than a "current" device. This has several advantages. First, edge effects of heat flow are automatically compensated for (this is the greatest source of experimental error in the guarded hot plate designs.) Secondly, since the power input is not the measured quantity, it reaches equilibrium naturally and does not require the constant attention of an operator or computer to continuously adjust the power input to the hot plate and its guard. Since our system is based on temperature measurement with constant temperature sources, it reaches equilibrium automatically.

Fig. A-1 shows the construction of the device. The hot side is kept at a selected constant temperature (plus or minus 1°C) by a thermostat controlling heater elements in an insulated supply tank.

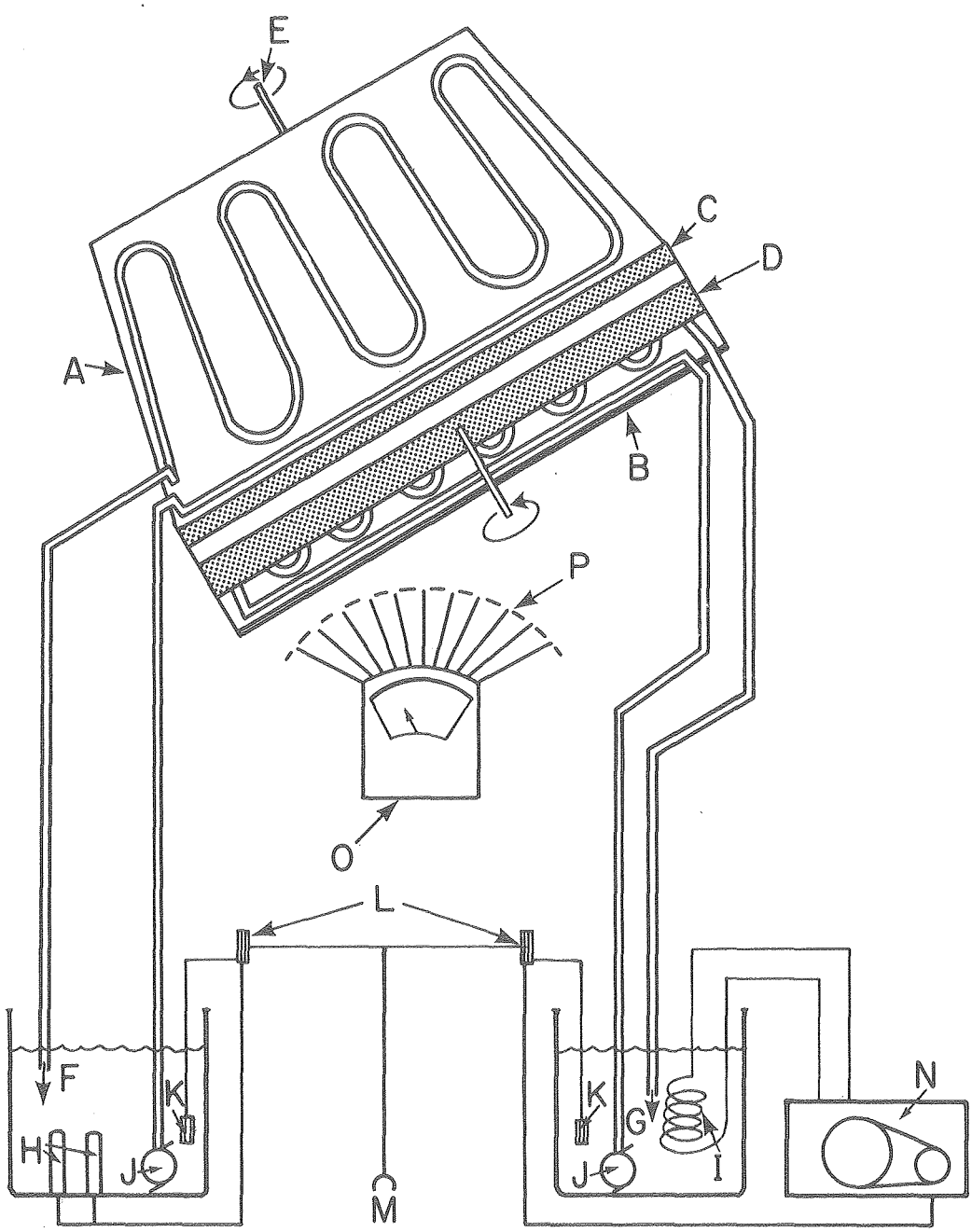

XBL 798-2659

Fig. A-1. Insulation tester.

Key to Fig. A-1 THERMAL RESISTANCE TESTER

A) Hot side (copper sheet & tubing)

B) Cold side (copper sheet and tubing)

C) Reference insulation

D) Test sample

E) Variable orientation axis

F) Hot water

G) Cold water

H) Resistance heaters

I) Cooling (Freon) coils

J) Pumps

K) Temperature sensors

L) Thermostats

M) Line current

N) Refrigeration compressor

O) Thermistor readout

P) Line to thermistors (15)

EDGE AND TANK INSULATION NOT SHOWN

The cold side is kept at 4° C by a thermostat controlling a refrigeration coil in a similar insulated supply tank. The thermal resistance of the sample is then measured by the ratio of the temperature drop across the sample to the temperature drop across the known insulation. Temperatures are measured to within 0.1°C at several places across the sample. The entire test box is supported on bearings, permitting the sample to be measured in any orientation This allows measurements to be made with and without convection so that transfer by radiation can be isolated.

2. SOLAR SIMULATOR - WEATHERING TEST: ACCELERATED AGING (see figure A-2)

The heart of the life-time tester is the spectral source of the bombarding radiation. The frequencies of the sun's rays interact with precise resonances determined by the bonding electron distribution of the sample. A xenon arc filtered through water matches the UV and visible spectrum of the sun with a verisimilitude that flourescent or mercury type aging tests cannot attain. The water jacket around the xenon lamp duplicates the filtering action of the earth's atmosphere and in addition cools the 2.5 kilowatt lamp.

The high power arc light is concentrated by an aluminum reflector. A cooled sample mount and fan insure that the sample does not overheat. The above "solar simulator " is a much more rapid and efficient test than the common "weatherometer" or "desert sun" tests. Results can be had from

Fig. A-2. Solar simulator.

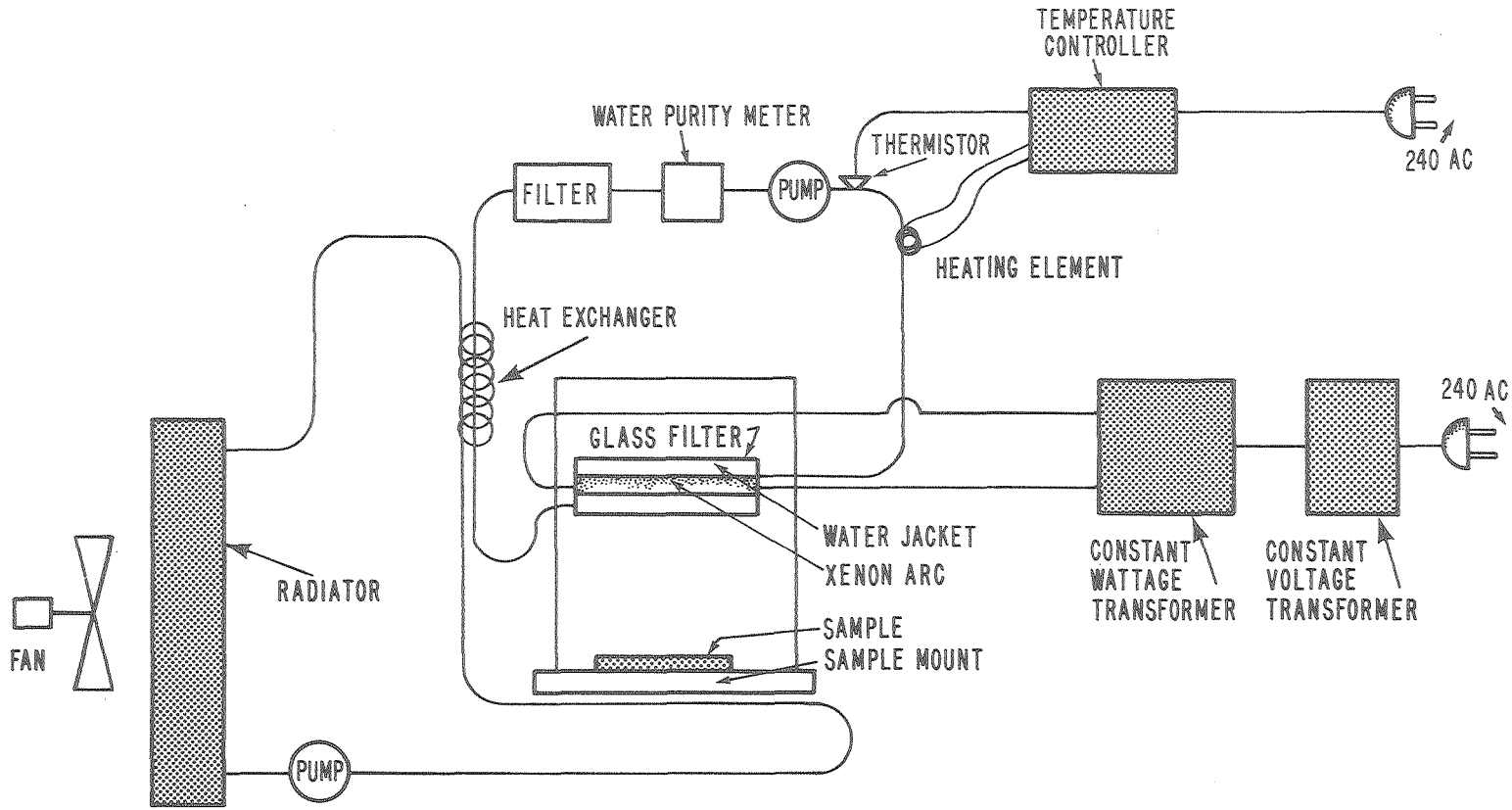

XBL798-2664

Notes on Figure A-2

XENON ARC (SOLAR SIMULATOR) CONSTRUCTION DETAILS

Bulb:	2500 watt low pressure Xenon arc (by Atlas)
Power Supply	Saturation-core type transformers
Bulb Cooling	Purified water circulated through plastic tubing by magnetic drive pump ("clean loop")
"Clean loop" Water Cooling	Through heat exchanger to water-to-air exchanger

Samples cooled by water

the solar simulator in three weeks, whereas the other tests take from three months to a year.

2. OPTICAL SHUTTER THERMOPTICAL PROPERTIES

The temperature of the sample is selected by the temperature controller, and the radiant flux meter measures the total transmitted. A run starts with cooled water, since the temperature controller can only heat, and the temperature is increased in ½° increments. The radiant flux meter is calibrated by removing the sample before and after the run to get a 100% transmission reading. Between each data point the light source is turned off for a 0% reading (see fig. A-3)

Notes on Set-up

1. The light source should be bright enough that a) variations in background lighting cannot be detected on the radiant flux meter when it is on the scale used for measurements, and b) variations in thermal radiation from the glass container due to variations in the water bath temperature cannot be detected. We found that a 200 watt tungsten filament bulb, 6 inches from the sample, was adequate. Although a xenon arc filtered through water would give a more accurate representation of sunlight, the scattering and reflectivity of the sample does not depend much on wavelength, so any constant spectrum light source is adequate.
2. The water bath must be at least 4 inches thick, to filter out the infrared from the light bulb that is longer than 2.5 microns. This prevents the sample from absorbing this ir and rising to a temperature above the water bath. The water bath does not, however, screen out the IR wavelengths that occur in sunlight, as it imitates the action of the atmospheric moisture screen.
3. The sample is taped to the bottom of the container to get it

Fig. A-3. Optical Shutter Properties Tester

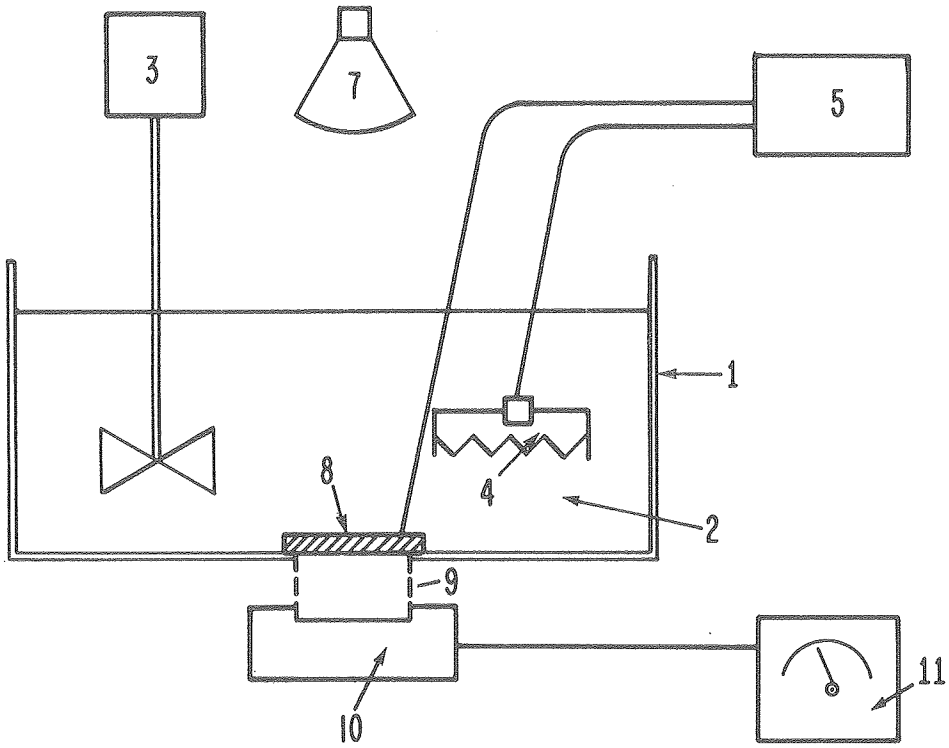

1 THIN GLASS CONTAINER
2 WATER BATH
3 STIRRER
4 IMMERSION HEATER
5 TEMPERATURE CONTROLLER
6 THERMISTOR
7 LIGHT SOURCE
8 SAMPLE
9 ALUMINIZED MYLAR TUBE
10 RADIANT FLUX DETECTOR SURFACE
11 MICROVOLTMETER

XBL 798-2671

as close as possible to the aluminized Mylar tube and to prevent its moving.

4. The thermistor and its leads are painted white so that they absorb no light from the light source. It is taped to the sample with transparent tape.
5. The temperature controller is accurate to .1°C; we used a Yellow Springs Instruments controller. The immersion heater is smaller and light enough to avoid overshoot; we used a 75 watt coffee heater.
6. The aluminized Mylar tube must have its aluminizing on the inside. The coating should be over 1000 Å for 96% reflection Its height should be no greater than half its diameter so than almost all the light reaches the detector surface in one or zero bounces. The tube should be pressed against both the glass containers, so that no light may escape.
7. Those parts of the detector surface not inside the Mylar tube should be masked from any light.
8. The detector and voltmeter should be accurate and drift free to 2%. We used a Hewlett Packard radiant flux meter with no window on the detector so that the mylar tube could be placed right on the detector surface.

3. OPTICAL SHUTTER CYCLE TEST (see fig. A-4)

The optical shutter cycle tester is a device for exercising the switching action of the optical shutter many thousands of cycles in a short time. The sample is alternatively heated and cooled to simulate changing weather conditions. A counter keeps track of the cycles, and the shutter is tested for thermo-optical properties at advanced stages of cycling..

Fig. A-4. Optical shutter cycle tester.

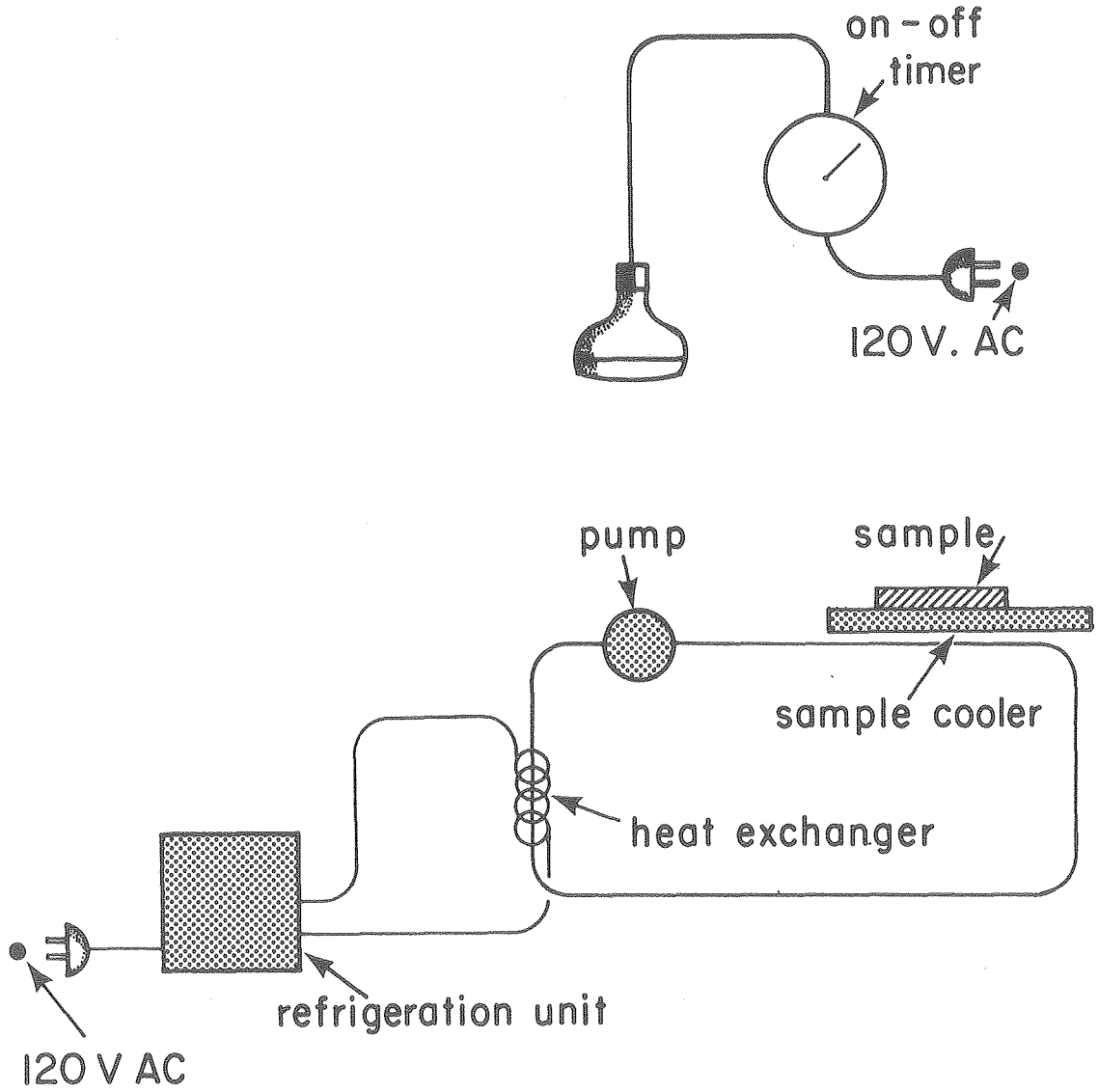

XBL 798-2660

4. SOLAR ENERGY TRANSMISSION

Procedure

Three readings are taken, one with the sample in place, and two calibration readings. The zero transmission calibration is made by replacing the sample with a piece of aluminum foil. The 100% transmission is made with nothing in front of the mylar tube. (see figure A-5)

Note: In this measurement a tungsten filament bulb is not an adequate substitute for the sun. However, a water filtered xenon arc would be.

5. VISIBLE TRANSMISSION SPECTRUM

The sample is placed in the sample beam of a Carey 14 visible spectrophotometer. Mounting glass is placed in the reference beam to balance out packaging effects.

6. EMISSIVITY

Procedure

Water at 15°C above ambient is placed in a gallon can painted black. The room is darkened and a calibration reading for an emissivity of .95 is taken. The sample is placed in good thermal contact with the can with silicone grease and a reading is taken. A calibration reading for an emissivity of .05 is taken by replacing the sample with aluminum foil, shiny side out. (see fig. A-6)

Note: The emissivity is a more useful measurement in calculating the thermal resistance than the ir reflection spectrum of the complete package.

Fig. A-5. Apparatus For Measurement Of Solar Energy Transmission

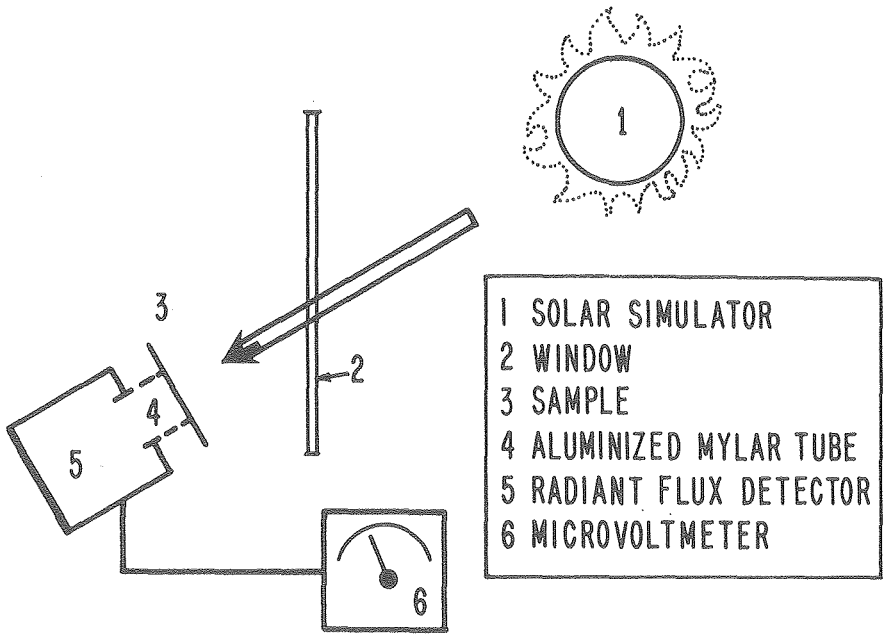

XBL 798-2672

Fig. A-6. Apparatus for measurement of emissivity.

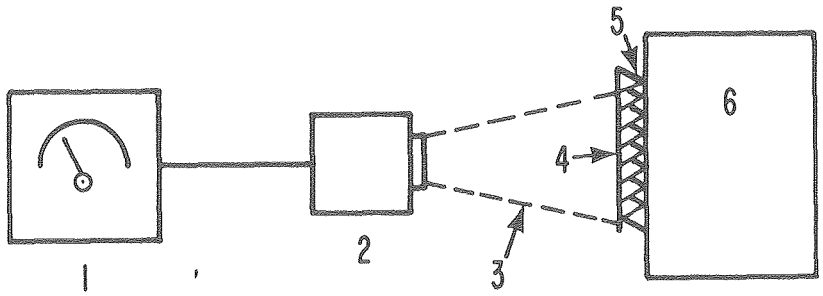

1 MICROVOLTMETER
2 RADIANT FLUX DETECTOR – EPPLEY E-6
3 ANGLE OF VIEW OF DETECTOR
4 SAMPLE
5 SILICONE GREASE
6 GALLON CAN OF HOT WATER

XBL798-2673

7. INFRARED REFLECTION-TRANSMISSION SPECTRUM

The substrate is placed in the reference beam and the thin film coated substrate in the sample beam. By:

$$R = 1 - T - A$$

and the approximation:

$$A = 0,$$

the IR reflection is derived directly from the transmission measurement The approximation is well justified at the wavelengths and film thicknesses used here, but can be checked on a Gier-Dunkle reflectometer.

APPENDIX B

Flat Plate Glass Consumption and Window Installation Data

These data were compiled by Public
Response Associates under subcontract

D O C U M E N T A T I O N O F D A T A

Presented in Table:

"ESTIMATED NUMBER OF WINDOWS
INSTALLED AND CONSUMPTION
OF FLAT GLASS"

Note

Because of the number of sources employed to compile these data and the occasional data inconsistencies encountered, analytical judgement was required to produce the summary data. Thus, some uncertainty exists in these summary data and they should be considered as estimates.

ESTIMATED NUMBER OF WINDOWS INSTALLED AND CONSUMPTION OF FLAT GLASS

BASED ON 1970-74 AVERAGE

TYPE OF BLDG. CONSTRUCTION	WINDOWS TOTAL UNITS (1000)	FLAT GLASS CONSUMED (MM sqft)	REGIONAL TOTAL WINDOWS (in 1000 units) No. east	No. Cent.	South	West	REGIONAL FLAT GLASS CONSUMED (in MM sq. feet) No. east	No. Cent.	South	West
RESIDENTIAL*										
·PRIME WINDOWS										
1-2 Family Homes	16,160	230	1,920	3,520	6,880	3,840	27	50	98	55
Apartments	3,780	50	600	780	1,500	900	8	10	20	12
Mobile Homes	3,400	30	300	700	1,700	700	3	6	15	6
TOTAL NEW	23,340	310	2,820	5,000	10,080	5,440	38	66	133	73
Remodeling/Replacement	5,000	70	1,440	1,390	1,360	810	20	20	19	11
TOTAL-PRIME	28,340	380	4,260	6,390	11,440	6,250	58	86	152	84
·STORM WINDOWS										
New	3,100	30	460	890	1,200	550	4	9	12	5
Remodeling/Replacement	31,000	290	10,850	13,020	5,270	1,860	102	122	49	17
TOTAL-STORM	34,100	320	11,310	13,910	6,470	2,410	106	131	61	22
TOTAL - RESIDENTIAL	62,440	700	15,570	20,300	17,910	8,660	164	217	213	106
NON - RESIDENTIAL*										
·NEW CONSTRUCTION	4,200	130	890	1,060	1,390	860	27	33	43	27
REPLACEMENT	800	95	170	200	270	160	20	24	32	19
TOTAL - NON·RESIDENTIAL	5,000	225	1,060	1,260	1,660	1,020	47	57	75	46
TOTAL - RES. + NON·RES.	67,440	925	16,630	21,560	19,570	9,680	211	274	288	152
PUBLIC CONSTRUCTION ONLY										
·Residential	300	4								
·Non-Residential	2,000	60								
TOTAL-PUBLIC	2,300	64								

* Private and public construction

	Data Base Used for Estimation	Appendix TwoA (Table #)	Compiling Agency	Appendix Two B (Ref. #)	Method of Estimation
I. WINDOW UNITS INSTALLED					
A. Residential --					
1. Prime Windows					
a. New construction . 1-2 family homes . Apartments . Mobiles homes	(1) New housing units built (av. 5-year period, 1970-74)	Table 1	U.S. Dept. of Commerce	1	For U.S. total -- . New housing units x windows per unit
	(2) No. of windows per unit 1 & 2 family homes.....16 Apartments..... 6 Mobile homes.....10	Table 2	Arch. Alum Mfrs. Assn (AA MA)	2	For regions -- . New housing units, by region x windows per unit (U.S. average)
b. Remodeling/ replacement	(1) Total no. of prime windows installed - remodeling/ replacement (1974)	Table 3	Arthur D. Little, Inc. (ADL) estimates, based on industry data	5	For U.S. total -- . ADL estimates
	(2) Total expenditures for maintenance & repairs and construction improvements by all residential property owners (av 1971-74)	Table 4	U.S. Dept. of Commerce	3	For regions -- . ADL estimates prorated regionally by expenditures for maintenance and repairs and construction improvements by all residential property owners
2. Storm Windows a. New construction b. Redmodeling/ replacement	(1) Estimated no. of storm windows installed in residential sector (1974)	Table 3	Arthur D. Little, Inc (ADL) estimates, based on industry data	5	For U.S. total -- . ADL estimates
	(2) Housing inventory - 1974 (no. of housing units, by type of structure)	Table 5	U.S. Dept. of Commerce	1	For regions -- . Housing inventory, 1974 x penetration (%) of storm windows = # of homes with storm windows.
	(3) Market penetration of storm windows for single-family homes (1966)	Table 6	Alum. Extruders Council and Market Facts, Inc.	4a	. ADL estimates prorated regionally on basis of homes with storm windows.

	Data Base Used for Estimation	Appendix TwoA (Table #)	Compiling Agency	Appendix Two B (Ref. #)	Method of Estimation
B. Non-Residential					
. New construction	(1) Unit shipments of aluminum windows, 1974	Table 7	Estimates of AAMA Marketing Research Committee	2	For U.S. total -- . AAMA estimates (adjusted to include steel windows)
. Replacement	(2) Sales of glass & glazing contractors, 1974 (New construction - non-residential)	Table 8	F.W. Dodge estimates	6	For regions -- . AAMA estimates (adj.) prorated regionally on sales of glass & glazing contractors.
II. FLAT GLASS CONSUMED					
A. Residential					
1. Prime windows	(1) Total no. of window units installed		)		For U.S. total & regions - (Basic approach) .No. of window units x window area (in sq.ft.)
	(2) Window area (sq.ft. per unit) .Prime windows - -Residential 14 sq.ft. -Mobile homes 9 sq.ft.		)Estimates of Public)Response Associates	-	- Window area computed from flat glass consumption and window units.
2. Storm windows	.Storm windows - 9.4 sq.ft.		Hittman Associates	8	
	(3) Flat glass consumption (mil.sq.ft.) .New residential construction .Residential replacement	Table 9	William M. Bethke	7	
B. Non-Residential					
. New construction . Replacement	Estimates of 1974 consumption of flat glass in non-residential buildings, new and replacement.	-	Arthur D. Little, Inc., estimates	5	For U.S. total - ADL estimates. For regions - .ADL estimates prorated regionally on basis of number of window units installed.

III - PUBLIC CONSTRUCTION Only

. Date series used for estimation:

1. New housing units started, privately vs. publicly-owned (av. 5-yr. period, 1970-74)	Table 10)	Ref. 4b
2. New construction put in place, non-residential buildings - private vs. public construction (av. 5-yr. period, 1970-74)	Table 11)	

. Method of estimation:

For residential - no. of windows
Based on proportionate share of total new housing units started (publicly-owned)

For non-residential - no. of windows
Based on proportionate share of total new construction put in place (public construction)

A P P E N D I X B-2

Tables

Compiled by Public Response Associates
under subcontract

Table 1

NEW HOUSING CONSTRUCTION
UNITS BUILT FROM Ap. 1970 - 1974*

	1000's of housing units				
	United States	Northeast	North Central	South	West
All housing units	9,983	1,248	2,097	3,412	2,326
All year-round housing units	9,877	1.230	2,087	4,246	2,314
Units in structure:					
. 1	4,669	532	1,001	2,063	1,073
. 2 to 4	764	130	137	239	258
. 5 or more	2,759	415	591	1,111	640
. Mobile home or trailer	1,685	153	358	833	343
Average for 5 year period, 1970-1974					
All year-round housing units	1,975	246	417	849	463
Units in structure:					
. 1	933	106	200	412	215
. 2 to 4	153	26	27	48	52
. 5 or more	551	83	118	222	128
. Mobile home or trailer	338	31	72	167	68

*Source: U.S. Bureau of the Census and U.S. Dept. of Housing and Urban Development (The Annual Housing Survey Report, 1974)

Table 2

NUMBER OF WINDOWS USED IN NEW RESIDENTIAL CONSTRUCTION*

Estimated: 1956-1975

(All Materials, including Aluminum, Wood, Steel, and Other Materials)

	1 & 2 Family		Apartments		All Residential
Year	Windows per Unit	Total Windows (Millions)	Windows per Unit	Total Windows (Millions)	Construction Total Windows** (Millions)
1956	14.4[1]	17.4	7.0[3]	0.8	18.2
1957	14.8	15.3	7.1	1.0	16.3
1958	15.3	17.4	7.4	1.5	18.9
1959	15.8	20.7	7.7	1.9	22.6
1960	16.6[2]	17.6	8.1	1.9	19.5
1961	16.9	17.6	8.1	2.6	20.2
1962	16.9	17.8	8.1	3.6	21.4
1963	16.9	18.3	8.1	4.6	22.9
1964	17.3	17.9	8.1	4.3	22.2
1965	17.3	17.7	7.8	3.8	21.5
1966	17.0	13.9	7.4	2.8	16.7
1967	16.9	15.1	7.0	3.0	18.1
1968	16.9	16.1	6.7	4.0	20.1
1969	16.6	14.3	6.4	4.1	18.4
1970	16.1[4]	13.9	6.1[4]	3.7	17.6
1971	15.9[4]	19.4	6.1[4]	5.3	24.7
1972	15.9[4]	22.0	6.0[4]	6.0	28.0
1973	16.1[4]	19.1	6.0[4]	5.2	24.3
1974r	16.1[4]	14.3	6.1[4]	2.3	16.6
1975p	16.0[4]	14.3	6.1[4]	1.2	15.5
% of Change '75 vs. '74		0%		-48%	-7%

*Estimated by AAMA Marketing Research Committee. Various sources were used as a guide, including the following which are footnoted:

1. Bureau of Labor Statistics "Characteristics" Surveys
2. Bureau of Building Marketing Research, 1960
3. Bureau of Labor Statistics showed 6.8 excluding basement; estimated 7.0 including basements
4. "Window & Door Market-Material Usage Patterns & Homeowner Attitudes," AAMA Marketing Research Committee, August, 1971

**Includes basements and above-ground windows.

r - revised
p - preliminary

From: Architectural Aluminum Industry Statistical Review, 1975
Architectural Aluminum Mfrs Association

Table 3

ESTIMATED NUMBER OF WINDOWS INSTALLED IN RESIDENTIAL SECTOR, 1974*

Type of Housing	Units Constructed 1974 (000's)	Windows/Unit	Windows Total (000's)
Prime Windows			
Detached Single Family	646.5	16	10,344
Attached Single Family	319.1	9	2,872
Multi-Family	386.8	6	2,321
Mobile Homes	329.3	10	3,293
Total New	1,681.7	(11.2)	18,830
Remodeling/Replacement	--	--	5,000
Total Prime			23,830
Storm Windows			
New			3,100
Remodeling/Replacement			31,000
			34,100

* Arthur D. Little, Inc., estimates, based on industry data.

From: Energy Conservation in New Building Design (An Impact Assessment of ASHRAE Standard 90-75), Federal Energy Administration, 1975.

Table 4

TOTAL EXPENDITURES FOR MAINTENANCE & REPAIRS
AND CONSTRUCTION IMPROVEMENTS BY ALL RESIDENTIAL PROPERTY OWNERS
(In millions of dollars)

	U.S. Total	Northeast	North Central	South	West
1971	16,299	4,488	4,939	4,209	2,664
1972	17,498	5,488	4,814	4,265	2,932
1973	18,512	5,278	5,315	5,012	2,906
1974	21,114	5,882	5,398	6,439	3,395
Average/year	18,356	4,284	5,117	4,981	2,974
Percent	100.0%	28.8%	27.9%	27.1%	16.2%

Source:
Construction Reports - Residential Alterations and Repairs, 1974 Annual Report (U.S. Dept. of Commerce, Bureau of the Census)

Table 5

HOUSING INVENTORY - 1974
(1000's of housing units)

	United States	Northeast	North Central	South	West
All housing units	77,602	28,039	20,593	24,758	14,212
All year-round housing units	75,886	17,268	20,218	24,349	14,050
Units in structure:					
. 1	51,279	9,564	14,407	18,020	9,287
. 2 to 4	9,459	3,587	2,608	1,757	1,506
. 5 or more	11,430	3,735	2,414	2,877	2,405
. Mobile home or trailer	3,718	383	789	1,695	851

Source:

U.S. Bureau of the Census and U.S. Dept. of Housing and Urbun Development (The Annual Housing Survey Report, 1974)

Table 6

MARKET PENETRATION OF STORM WINDOWS
FOR SINGLE-FAMILY HOMES, 1966*

Geographic Division	% of homes with storm windows
New England	86%
Middle Atlantic	91
East North Central	89
East South Central	35
South Atlantic	37
West South Central	13
West North Central	90
Mountain	32
Pacific	8
Average U.S.	59%

*"Homeowners' Survey of Secondary Doors and Windows," Aluminum Extruders Council, conducted by Market Facts, Inc., Chicago, Illinois, January 1967.

Ref. source: Construction Review (U.S. Dept. of Commerce), March 1975. Article "Storm Doors and Windows"

Table 7

INDUSTRY SHIPMENTS OF ALUMINUM WINDOWS AND DOORS[a]

Estimated 1968-1975
(millions of dollars and units)

Residential	1968	1969	1970	1971	1972	1973	1974r	1975p
Units								
New Windows - Conventional Construction	11.5	10.7	10.1	14.4	16.8	14.1	9.2	8.4
Replacemend Windows[b]	1.7	1.7	1.7	1.9	2.2	2.5	1.9	2.0
Mobile Home Windows	3.2	4.1	4.0	5.0	5.8	5.7	3.3	2.2
Storm Window and Doors[r]	24.1	24.1	25.0	26.4	28.0	30.8	31.8	33.0
Sliding Glass Doors[c]	1.0	1.1	1.0	1.5	1.7	1.4	0.9	0.8
Total Units[b,r]	41.5	41.7	41.8	49.2	54.5	54.5	47.1	46.4
Dollars								
New Windows - Conventional Construction	$178	$173	$167	$250	$292	$254	$201	$202
Replacement Windows	35	37	38	44	51	60	39	51
Mobile Home Windows[r]	25	33	33	43	50	51	33	23
Storm Windows and Doors[r]	226	233	249	278	300	344	408	442
Sliding Glass Doors	62	72	66	104	118	101	87	85
Total Units	$526	$548	$553	$719	$811	$810	$768	$803
Nonresidential								
Units								
New Construction	3.1	3.4	3.0	3.2	3.4	3.7	4.1	3.6
Replacement[d]	-	-	-	-	-	-	.8	.9
Total Units	3.1	3.4	3.0	3.2	3.4	3.7	4.9	4.5
Dollars								
New Construction	$108	$123	$111	$124	$141	$163	$219	$183
Replacement[d]	-	-	-	-	-	-	52	55
Total Dollars	$108	$123	$111	$124	$141	$163	$271	$238
Total Windows & Doors								
Units[r]	44.6	45.1	44.8	52.4	57.9	58.2	52.0	50.9
Dollars[r]	$634	$671	$664	$843	$952	$973	$1039	$1041

Estimated by AAMA Marketing Research Committee. Nonresidential are estimated on the basis of industry trends since no specific market studies have been conducted in this area. Replacement windows are estimated to include shipments of light commercial units.

[a] Because of differing sources of information, caution is urged in comparing year-to-year figures for particular product types and, particularly, dollar volume.

[b] 1968-1973 includes nonresidential.

[c] Includes nonresidential sliding glass doors. These account for about 5% of the total sliding glass door units reported.

[d] Included in residential prior to 1974.

r - revised
p - preliminary

From: Architectural Aluminum Industry Statistical Review, 1975
Architectural Aluminum Mfrs Association

Table 8

GROSS SALES OF GLASS AND GLAZING CONTRACTORS, 1974*
New Construction - Non-Residential

Region	Million Dollars	% of total
Northeast	$ 61.3	21.2%
Midwest	73.1	25.2
South	95.7	33.1
West	59.2	20.5
. Total U.S.	$289.3	100.0

*F.W. Dodge estimates

Source: The Glass and Glazing Contractor - A Market Profile for 1975 (F.W. Dodge Div., McGraw-Hill Information Systems Co.)

Table 9

Flat Glass Consumption by Markets*
(Millions of Square Feet)

	1970	1971	1972	1973	1974	1975
Cars	405	540	570	630	465	425
Trucks	105	125	150	180	165	135
Total New Automotive	505	675	720	810	630	560
Automotive Replacement	135	145	150	160	180	170
New Residential Construction	240	300	350	370	310	260
Residential Replacement	270	320	350	370	380	350
Total Residential	510	620	700	740	690	610
Commercial Construction	310	320	380	450	410	320
Other**	255	280	330	370	400	340
TOTAL	1720	2030	2280	2530	2310	2000

*Excludes imports and rolled glass.
**Includes mirrors, export, manufacturers' inventories, etc.

From: "The Outlook for the Flat Glass Industry" by William M. Bethke
(U.S. Glass, Metal & Glazing, May 1976)

Table 10

NEW HOUSING UNITS STARTED
PRIVATELY VS. PUBLICLY-OWNED
(In 1000 units)

	Total	Privately Owned	Publicly Owned
1970	1,469	1,434	35
1971	2,084	2,052	32
1972	2,379	2,357	22
1973	2,057	2,045	12
1974	1,353	1,338	15
Av/year	1,868	1,845	23
%	100%	99%	1%

Source: Construction Review (U.S. Dept. of Commerce), November 1976.

Table 11

NEW CONSTRUCTION PUT IN PLACE
NON-RESIDENTIAL BUILDINGS
(In billion dollars)

	Total	Private Construction	Public Construction
1970	31.0	21.4	9.6
1971	32.8	22.5	10.3
1972	34.6	24.0	10.6
1973	39.7	27.6	12.1
1974	43.6	29.6	14.0
Av/year	36.3	25.0	11.3
%	100%	68.9%	31.1%

Source: Construction Review (U.S. Dept. of Com), November 1976

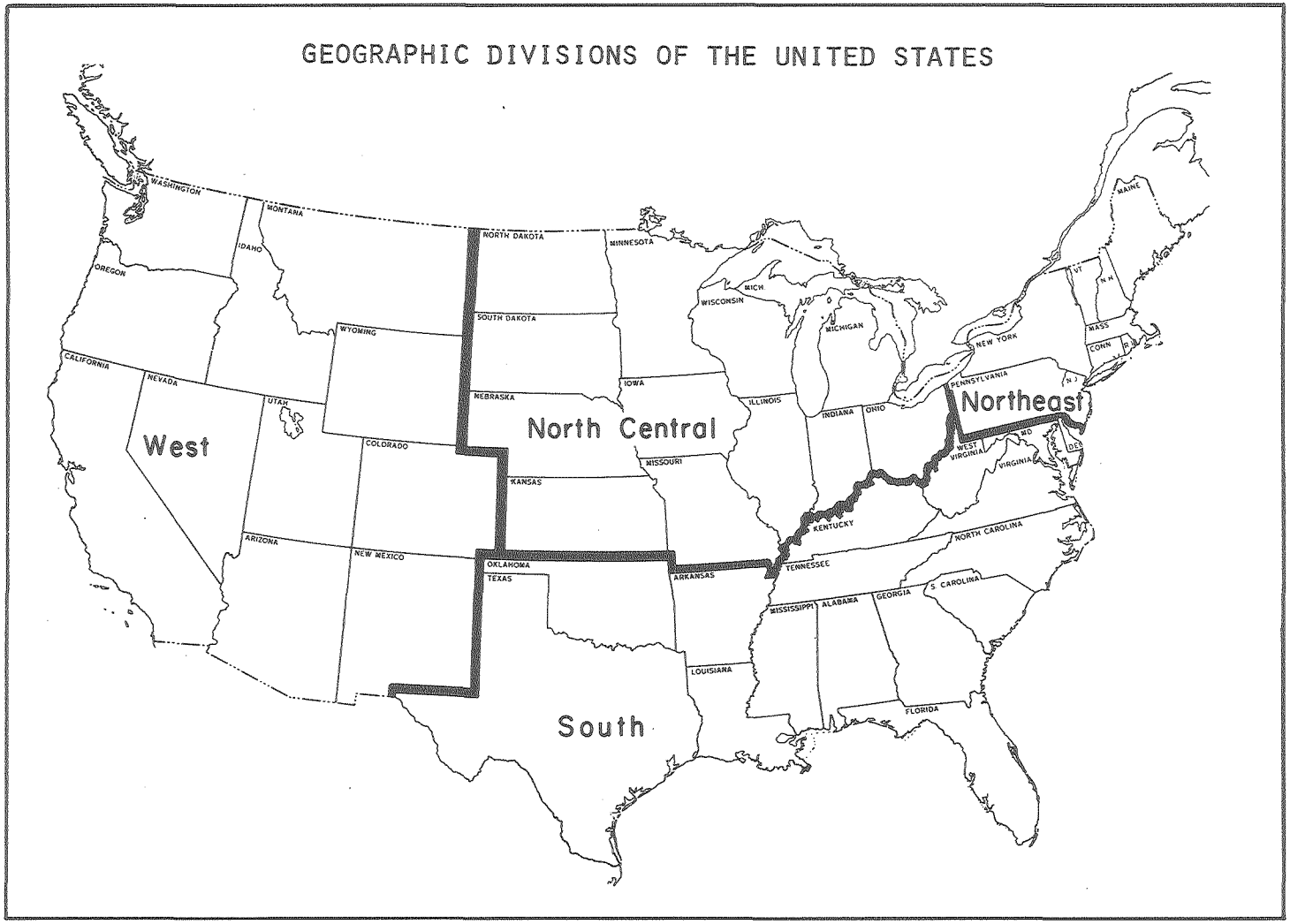
GEOGRAPHIC DIVISIONS OF THE UNITED STATES
West
North Central
Northeast
South
WASHINGTON
OREGON
CALIFORNIA
NEVADA
IDAHO
MONTANA
WYOMING
UTAH
ARIZONA
COLORADO
NEW MEXICO
NORTH DAKOTA
SOUTH DAKOTA
NEBRASKA
KANSAS
OKLAHOMA
TEXAS
MINNESOTA
IOWA
MISSOURI
ARKANSAS
LOUISIANA
WISCONSIN
MICH
MICHIGAN
ILLINOIS
INDIANA
OHIO
KENTUCKY
TENNESSEE
MISSISSIPPI
ALABAMA
GEORGIA
FLORIDA
S CAROLINA
NORTH CAROLINA
VIRGINIA
WEST VIRGINIA
MD
DEL
PENNSYLVANIA
NEW YORK
VT
N H
MAINE
MASS
CONN
R I
N J

XBL799-2682

DATA REFERENCES

1. The Annual Housing Survey Report, 1974
   U.S. Bureau of the Census & Dept. of Housing & Urban Development

2. Architectural Aluminum Industry Statistical Review, 1975
   Arch. Alum. Mfrs. Assn.

3. Construction Reports - Residential Alterations and Repairs
   (1974 Annual Report) U.S. Dept. of Commerce

4. Construction Review U.S. Dept. of Commerce

   a. March 1975 issue
   b. November 1976 issue

5. Energy Conservation in New Building Design

   (An Impact Assessment of ASHRAE Standard. 90-75)
   Federal Energy Administration, 1975

6. The Glass and Glazing Contractors (A Market Profile for 1975
   F.W. Dodge Div, McGraw-Hill Information Systems Co.

7. "The Outlook for the Flat Glass Industry" (article by William M. Bethke)
   U.S. Glass, Metal & Glazing, May 1976 issue

8. Technology Assessment of Residential Energy Conservation Innovations (May 1975)
   U.S. Dept. of Housing & Urban Development

This report was done with support from the Department of Energy. Any conclusions or opinions expressed in this report represent solely those of the author(s) and not necessarily those of The Regents of the University of California, the Lawrence Berkeley Laboratory or the Department of Energy.

Reference to a company or product name does not imply approval or recommendation of the product by the University of California or the U.S. Department of Energy to the exclusion of others that may be suitable.

TECHNICAL INFORMATION DEPARTMENT
LAWRENCE BERKELEY LABORATORY
UNIVERSITY OF CALIFORNIA
BERKELEY, CALIFORNIA 94720