LBL-9390

CONF-791102--82

Lawrence Berkeley Laboratory

UNIVERSITY OF CALIFORNIA

Engineering & Technical Services Division

Presented at the 8th Symposium on Engineering Problems of Fusion Research, San Francisco, CA, November 13-16, 1979; also to be published in IEEE Nuclear and Plasma Sciences Society Journal

ARC CURRENT MODULATOR FOR NEUTRAL BEAM SOURCE

G. J. DeVries, A. A. Arthur, W. R. Baker,
E. Fong, J. V. Franck, and D. B. Hopkins

MASTER

November 1979

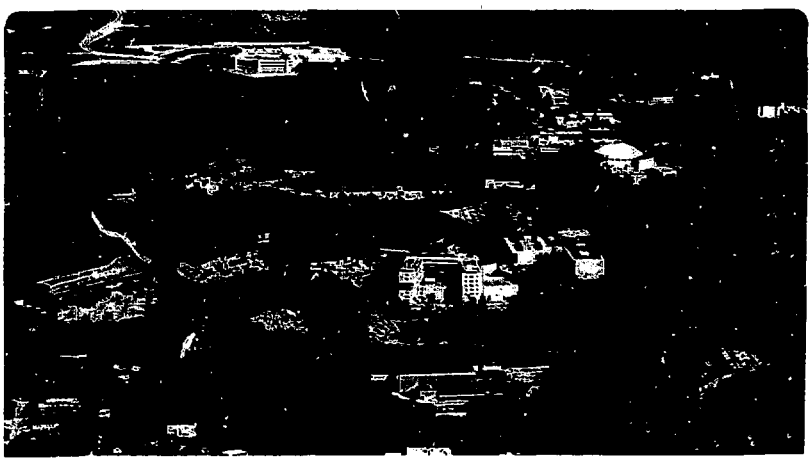

Prepared for the U.S. Department of Energy under Contract W-7405-ENG-48

DISTRIBUTION OF THIS DOCUMENT IS UNLIMITED

ARC CURRENT MODULATOR FOR NEUTRAL BEAM SOURCE

G. J. DeVries, A. A. Arthur, W. R. Baker,
E. Fong, J. V. Franck, and D. B. Hopkins
University of California
Lawrence Berkeley Laboratory*
1 Cyclotron Road
Berkeley, CA 94720

DISCLAIMER

This book was prepared as an account of work sponsored by an agency of the United States Government. Neither the United States Government nor any agency thereof, nor any of their employees, makes any warranty, express or implied, or assumes any legal liability or responsibility for the accuracy, completeness, or usefulness of any information, apparatus, product, or process disclosed, or represents that its use would not infringe privately owned rights. Reference herein to any specific commercial product, process, or service by trade name, trademark, manufacturer, or otherwise, does not necessarily constitute or imply its endorsement, recommendation, or favoring by the United States Government or any agency thereof. The views and opinions of authors expressed herein do not necessarily state or reflect those of the United States Government or any agency thereof.

Summary

This paper describes the design of an arc current modulator for a 10 x 40 cm neutral beam source. The arc modulator has been designed for the TFTR Neutral Beam Source Test Facility. The purpose of the arc modulator is twofold; first, the arc modulator shapes the current rise during the turn on time of the source arc current so that good beam optics are maintained throughout the rise; second, the arc modulator has the capability of regulating the arc current to compensate for power supply ripple and other acceleration voltage fluctuations during the pulse flat top. The maximum current through the arc modulator is 4000 amps which can be switched from the neutral beam source to a parallel circuit of the modulator in the order of a few microseconds, which is required when sparkdown occurs in the source. The arc modulator design is a fast voltage to current converter. The arc current can be controlled with an analog voltage which allows the shape of current rise to be programmed. Switching the current from the arc to a parallel circuit of the modulator eliminates the effect of the inductance of the power lines and power supply which makes it possible to switch high currents at the microsecond level.

Design Parameters

The arc modulator is designed to deliver up to 4000 amps to the arc for 0.6 second pulses with a duty factor of 1%. During interrupts, the arc current is to be notched to a minimum keep-alive value selectable between 200 - 1000 amps for periods of up to 1 millisecond. During the initial beam acceleration (accel) voltage turn-on and during interrupt recovery, the arc current rise is to be shaped to provide good beam optics. During the pulse flat top, it is required that the arc current be adjustable to a precision of $\leq$ 1% of the full scale nominal current. The arc current is to be controlled by an analog signal to be derived either from an accel voltage divider or an exponential function generator. The arc current is to be proportional to the 3/2 power function of this control voltage (see Figure 1).

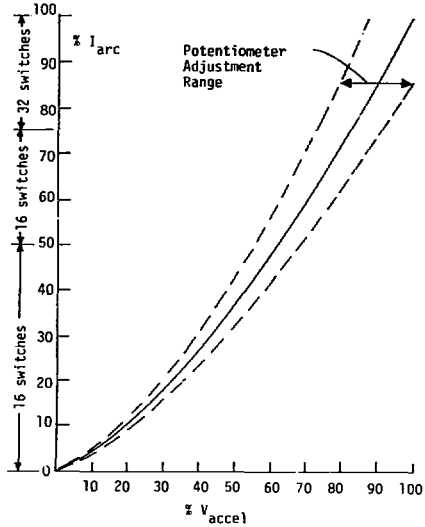

Figure 1

Source Arc Current Versus Accel Voltage

Technical Description

The arc modulator consists of 64 series-parallel transistor switches. Figure 2 shows the schematic in principle. The on/off switching of the transistors is controlled by the output of the 64 comparators. The inputs to the comparators are the analog control voltage and a reference voltage divider with 64 taps. The voltage at 13 taps on this reference divider is varied by means of potentiometer settings. This provides the adjustment necessary to obtain variations around the 3/2 power function of arc current versus accel voltage (see Figure 1).

The current switching capability per switch has been chosen such that the first 16 switches to be turned on during the arc current rise contribute a current of about 3% per switch of the full scale current. The second 16 switches and the remaining 32 switches have a capability of switching a current of about 1.5% and 0.8% per switch respectively. This distribution of current switching capability allows the arc current to be regulated during the flat top of the arc current pulse within the 1% range, with some savings in electronic hardware on the lower current range of the arc modulator. Also, at lower arc current levels, the precision required for stable beam operation becomes progressively less.

* Work supported by U.S. DOE Contract W7405-eng-48

Figure 3 shows some data points of the arc impedance measurements that were available at the time of the arc modulator design. The measured points were fitted to a straight line, and for the purpose of the calculations, we have assumed this line to continue, shown as the dotted section in Figure 3. (It has been determined that the arc characteristics deviate from this straight line at low currents, as indicated by the cross-hatched section shown.)

The collector resistors have been calculated using the electrical model shown in Figure 4 for the given arc impedance shown in Figure 2. The formulas for this circuit model are:

$$I_A = \frac{(V_S \times R_P - V_B \times (R_R + R_P))}{((R_R + R_P \times (R_S + R_A + R_P) - R_P^2)}$$

$$V_C = \frac{(R_P \times V_S - (I_A \times R_P \times R_R))}{(R_R + R_P)}$$

$$V_A = (I_A \times R_A) + V_B$$

$$R_S = \frac{(V_C - V_A)}{I_A}$$

herein is

I_A = current flowing through the arc

V_A = voltage across the arc

V_S = power supply open circuit output voltage

V_B = virtual battery voltage of the arc obtained from Figure 2 through extrapolation

V_C = voltage on the input of the arc modulator

R_P = resistance of parallel circuit

R_S = resistance of serial circuit

R_R = power supply output impedance

R_A = arc impedance

Since the amount of current to be switched per switch is chosen according to the required regulation precision, the collector resistor values have been calculated for each switch, aided by a computer using the method of iteration.

The resistor values for each current switch provide exact complementary current switching only for the design center values of the arc parameters R_A and V_A. For possible arc impedance varistions of ± 30% of nominal, the transient mismatch errors are held to about 1%, by the effective inductance of the arc power supply, during a notch time of one millisecond or less.

The input analog voltage, derived from either the exponential voltage function generator or from the accel voltage is connected to 64 comparators, which in turn drive the power transistor circuits. In this design, the rise time shape of the function generator can be adjusted in order to match the shape of the accel voltage rise. Between the comparators and the power transistors, some gating has been provided for use of an arc enable control.

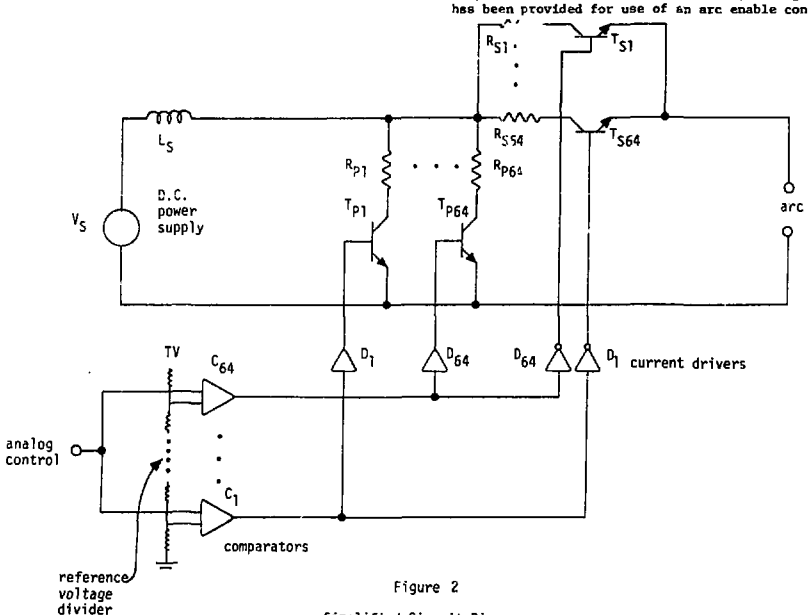

Figure 2

Simplified Circuit Diagram

This control input overrides the comparator functions and allows the current to flow to the source during turn on time of the power supply. An additional gate input is controlled by a maximum current sense circuit and will cause the arc modulator to divert all the power supply current into the parallel circuit of the modulator thus protecting the series switches in the event of an inadvertent short circuit on the output of the arc modulator. The parallel circuit has been designed to absorb the energy during the entire pulse.

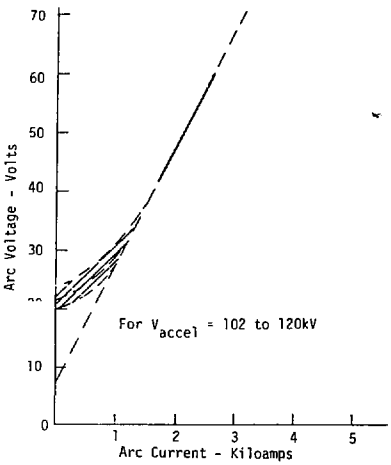

Figure 3

Source Arc Impedance Versus Source Arc Current. Straight Line is Obtained from Actual Data, Dotted Line Has Been Extrapolated

The transistor power switch is shown in Figure 5. The electronic circuit output drive is coupled with an optical isolator to an integrated circuit capable of driving 200mA of current. This current drives the parallel circuit of the arc modulator via an emitter follower. The serial circuit is driven from the collectors of the parallel circuit for simplicity.

Mechanical Design

The practical implication of a 4000 amp current switching device at the microsecond level is not straightforward and some of the design approaches are discussed below.

The first concern in the design had been the inductance of conductors of the arc modulator. As earlier mentioned, the inductance of the power supply and the supply lines have no effect at the arc modulator switching times. A low inductance transmission line (.15μH) connects the arc modulator to the source. The output bus bar of the modulator is a plate adjacent to the ground plane of the modulator and insulated with a sheet of 1/32" fiberglass. Figure 6 shows a sketch of the output bus bar as well as the plates, mounted perpendicular to the output bus, at which the transistor switches are located.

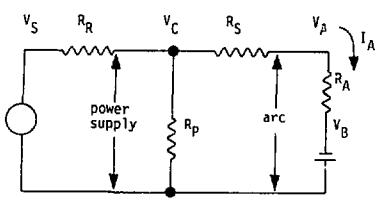

Figure 4

D.C. system model

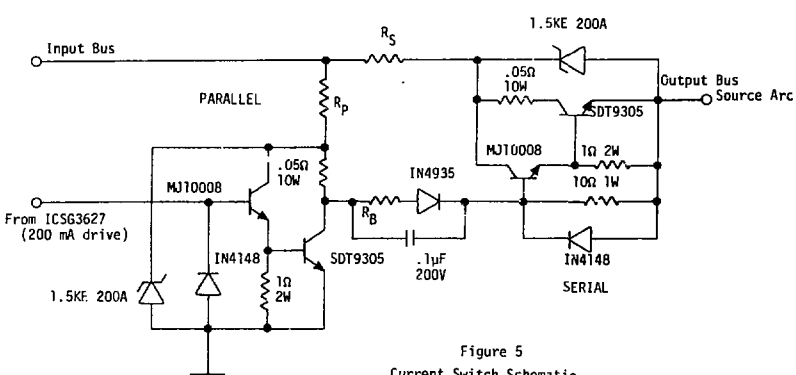

Figure 5

Current Switch Schematic

The total calculated inductance of the conductors for the design is in the order of 1nH. The inductance of the output bus bar is negligible. The heat dissipation in the arc modulator takes place mainly in the collector resistors of the power transistors. The collector resistor for each transistor consists of a number of 50 watt chassis mount resistors type RH-50 in parallel; the resistors are mounted on a 3/8" aluminum plate, which has been drilled lengthwise for the purpose of water cooling. The power transistors are mounted on an aluminum 1/8" plate. Sufficient cooling has been provided for transistors through the aluminum 1/8" plate to the water cooled 3/8" plate. The transistors connect electrically to a printed circuit board that carries the components of the transistor switch. Figure 7 shows a cooling plate with the components. An overall picture of the arc modulator located in the "Hotbox" is shown in Figure 8.

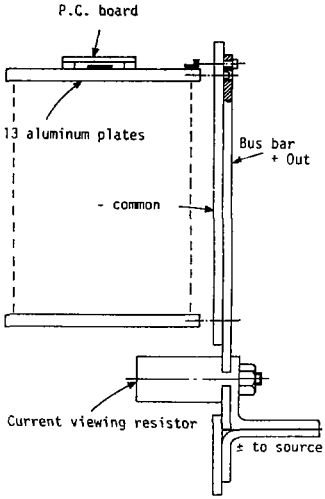

Figure 5

Output Bus Bar and Plate Assembly

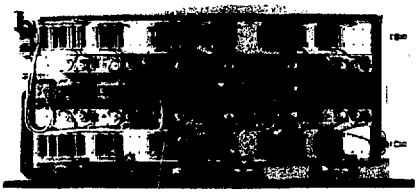

Figure 7
Plate Assembly

Preliminary Results

The arc modulator has so far been tested and successfully operated with the neutral beam source up to about 1000 ampere arc current. During the tests, the exponential voltage generator had been used to control the shape of the arc current rise. No tests have yet been performed to use the arc modulator as a device to regulate the voltage fluctuations of the accel voltage supply.

The beam optics were controlled quite satisfactorily by matching the arc current rise to the accel voltage rise, using the exponential voltage generator. Preliminary findings are that the design accuracy of 1% arc current controllability is quite adequate on the flat top part of the beam pulse.

References

1. D. B. Hopkins, et al., "The Lawrence Berkeley Laboratory Power Supply System for TFTR Neutral Beam Source Development", LBL-6377, October 1977.

2. W. R. Baker, "NBSTF Arc Supply Transmission Line", Internal Report NTFD-2008-Rev. 1, September 8, 1977.

3. I. C. Lutz, "Arc Power Supply Characteristics", Internal Report NTFD-2040, March 7, 1978.

Figure 8
Arc Modulator Mounted in "Hotbox"