LBL-9522
Preprint

Lawrence Berkeley Laboratory

UNIVERSITY OF CALIFORNIA

RECEIVED
LAWRENCE
BERKELEY LABORATORY

FEB 22 1982

LIBRARY AND
DOCUMENTS SECTION

ENERGY & ENVIRONMENT DIVISION

Submitted to Atmospheric Environment

TECHNIQUE FOR DETERMINING POLLUTANT EMISSIONS FROM A GAS-FIRED RANGE

Gregory W. Traynor, Douglas W. Anthon,
and Craig D. Hollowell

December 1981

TWO-WEEK LOAN COPY

This is a Library Circulating Copy
which may be borrowed for two weeks.
For a personal retention copy, call
Tech. Info. Division, Ext. 6782

LBL-9522 c.2

Prepared for the U.S. Department of Energy under Contract W-7405-ENG-48

DISCLAIMER

This document was prepared as an account of work sponsored by the United States Government. While this document is believed to contain correct information, neither the United States Government nor any agency thereof, nor the Regents of the University of California, nor any of their employees, makes any warranty, express or implied, or assumes any legal responsibility for the accuracy, completeness, or usefulness of any information, apparatus, product, or process disclosed, or represents that its use would not infringe privately owned rights. Reference herein to any specific commercial product, process, or service by its trade name, trademark, manufacturer, or otherwise, does not necessarily constitute or imply its endorsement, recommendation, or favoring by the United States Government or any agency thereof, or the Regents of the University of California. The views and opinions of authors expressed herein do not necessarily state or reflect those of the United States Government or any agency thereof or the Regents of the University of California.

Submitted to
Atmospheric Environment

LBL-9522
EEB-Vent 81-37

TECHNIQUE FOR DETERMINING POLLUTANT EMISSIONS FROM A GAS-FIRED RANGE

Gregory W. Traynor, Douglas W. Anthon, and Craig D. Hollowell

Building Ventilation and Indoor Air Quality Program
Energy and Environment Division
Lawrence Berkeley Laboratory
University of California
Berkeley, CA 94720

December 1981

This work was supported by the Director, Office of Energy Research, Office of Health and Environmental Research, Human Health and Assessments Division of the U.S. Department of Energy under Contract No. W-7405-ENG-48.

TECHNIQUE FOR DETERMINING POLLUTANT EMISSIONS FROM A GAS-FIRED RANGE

Gregory W. Traynor, Douglas W. Anthon, and Craig D. Hollowell

Building Ventilation and Indoor Air Quality Program
Energy and Environment Division
Lawrence Berkeley Laboratory
University of California
Berkeley, CA 94720
United States

Abstract-Domestic combustion appliances can cause elevated levels of indoor air pollution when operated. We have measured a wide variety of pollutants emitted from the oven and top burners of a natural gas-fired range. Results showed that indoor pollutant levels from a gas-fired range can be in excess of outdoor levels. A mathematical indoor air quality model was applied to our laboratory studies to calculate pollutant emission rates per caloric value of fuel consumed. The model was also used to calculate the temporal profile of the indoor pollution concentrations as well as to determine indoor pollutant decay rates from mechanisms other than air infiltration. Comparisons of measured and calculated data showed good agreement, and suggests that this model may be useful for determining pollutant emissions from a wide variety of other sources, for estimating pollution levels in other indoor environments, and for evaluating pollutant control strategies.

keywords: air pollution, carbon monoxide, formaldehyde, gas stove, indoor air quality, infiltration, modeling, nitrogen dioxide, particles, ventilation.

INTRODUCTION

Air pollution research has recently begun to focus on the problem of indoor air quality. Several studies have shown that the concentrations of certain pollutants in residences with combustion appliances frequently exceed those found in residences without combustion appliances or those found outdoors (Hollowell et al., 1977; Palmes et al., 1977; and Melia et al., 1978) Indoor combustion appliances such as gas-fired ranges, gas-fired water heaters, unvented gas-fired space heaters, and portable kerosene-fired space heaters emit a wide variety of pollutants, including carbon monoxide (CO), carbon dioxide (CO_2), nitric oxide (NO), nitrogen dioxide (NO_2), sulfur dioxide (SO_2), formaldehyde (HCHO), and respirable particles, and can represent a major source of air pollution in some residences. The pollution levels resulting from the use of such appliances depends on many factors: the rate at which the pollutants enter the living space (i.e., the source strength), the duration of appliance operation, the type of pollutant, and the number and type of mechanisms available for their removal (e.g., infiltration, mechanical ventilation, and chemical/physical reactions).

This paper focuses on quantifying pollutant source strengths and emission rates associated with the use of domestic gas-fired ranges. The pollutant source strength (mass of pollutant emitted per unit of time) is a combination of the pollutant emission rate (mass of pollutant emitted per caloric value of fuel consumed) and the fuel consumption profile of the appliance. In the past, gas ranges were manufactured with a venting option at the back of the stove, however, in new stoves the oven pollutants are vented at the top of the stove, such that oven pollutants and top-burner pollutants directly enter the interior living space. Although range hoods can alleviate most of the problem, they are frequently not used because of the high noise levels generated by the fans among other reasons. Gas stoves may increase indoor pollution levels if no provisions are made to remove their emissions from the residence.

In the past, pollutant emission rates from combustion appliances have been determined in two different ways: Cote et al., (1974) used an 8.0 m^3 chamber with a high flow rate (504 m^3 h^{-1}) and calculated emission rates

from the difference between the inlet and outlet pollutant concentration and the flow rate through the chamber. Himmel and DeWerth (1974) and Yamanaka et al., (1979) both relied upon measuring the ratio of the pollutant of interest to the CO_2 concentration in the appliance plume and then calculating the emission rate of the pollutant using the theoretical CO_2 emission rate. The technique reported here for determining the pollutant emission rate of the appliance relies on an indoor air quality model whose parameters are measurable in a wide variety of buildings. The model described in this paper uses the indoor pollutant concentrations, the outdoor pollutant concentrations, the air-exchange rate of the building, and the indoor pollutant reactivity. Because these parameters can be easily measured in a wide variety of buildings, this approach can provide a more extensive and realistic profile of indoor air quality than has heretofore been attainable.

MODELING

Four basic physical/chemical processes that describe the behavior of pollutants in an enclosed chamber were described by Alonzo et al., (1979) and later used by Dockery and Spengler (1981) to analyze field samples of respirable particles. In summary, the two processes that increase indoor contaminant levels are the flow of outdoor contaminants into the interior environment (less the fraction that is removed by the building shell), and the rate at which contaminants are generated indoors (i.e., the pollutant source strength); the two processes that decrease indoor contaminant levels are the flow of indoor air out of the interior environment, and the net removal rate of indoor contaminants via various chemical and physical removal processes that occur completely within the interior environment (e.g., wall adsorption). Both Alonzo et al., (1979) and Dockery and Spengler (1981) combined these processes into a single conservation-of-mass model. The model assumes that the concentration of the air that flows out of the chamber is the same as the average indoor concentration. (The use of a mixing fan helps ensure that this assumption is correct.) The mathematical expression for the change in indoor contaminant mass concentration, using

notation similar to Dockery and Spengler, is:

$$dC = Pa\ C_o\ dt + \frac{S}{V}\ dt - (a+k)\ C\ dt \qquad (1)$$

where:

C = average indoor contaminant concentration ($\mu g\ m^{-3}$);

C_o = outdoor contaminant concentration ($\mu g\ m^{-3}$);

P = fraction of outdoor contaminants that penetrates the shell (unitless) (1 = 100% penetration);

a = air exchange rate in air changes per hour (ach) (h^{-1});

S = generation rate of indoor contaminants, also called source strength ($\mu g\ h^{-1}$);

V = chamber volume (m^3);

k = net rate of removal processes other than air flow (h^{-1}).

Assuming C_o, P, a, S, and k are constant, Equation (1) can be solved for C(t) to give:

$$C(t) = \frac{PaC_o + S/V}{a+k}\ [\ 1 - e^{-(a+k)t}\ ] + C(0)e^{-(a+k)t} \qquad (2)$$

Equation (2) describes the average (spatial) concentration of a pollutant in an enclosed space of a given volume. This model, developed to describe the behavior of indoor particulates, can be extended to describe the behavior of gases as well. For gases, C(t) and C_o are in units of parts-per-million (ppm) and S is in units of $cm^3\ h^{-1}$. For gases, the volumetric concentration is used rather than the mass concentration because it is independent of temperature and pressure and thus yields easily interpreted results.

In our experiments the fuel consumption rate is a step function causing the source strength, S, to be a step function that is constant over specific time intervals. To properly describe the temporal behavior of the indoor concentrations, a separate equation is needed for each distinct source strength. The equations are coupled through the C(0) term, where

the final concentration, C(T), in one regime is C(0) in the next regime. Rearranging Equation (2) to isolate a non-zero source strength (expressed as S/V for convenience) and letting T equal the duration of the constant source strength, gives us:

$$\frac{S}{V} = (a+k)\,\frac{[\,C\,(T) - C(0)e^{-(a+k)T}\,]}{[\,1 - e^{-(a+k)T}\,]} - PaC_o \qquad (3)$$

Finally, by multiplying Equation (3) by V and dividing by the fuel consumption rate, R (kJ h^{-1}), we can obtain the appliance emission rate, E (μg kJ^{-1} for particles and cm^3 kJ^{-1} for gases).

$$E = \frac{S}{R} = \frac{V}{R}(a+k)\,\frac{[C(T) - C(0)e^{-(a+k)T}\,]}{[\,1 - e^{-(a+k)T}\,]} - \frac{VPaC_o}{R} \qquad (4)$$

For gases, E in cm^3 kJ^{-1} can be converted to μg kJ^{-1} by using the ideal gas law and the time-weighted average temperature and pressure in the chamber. Note that Equation (4) relies on the initial and final spatial average concentration of indoor pollutants, C(0) and C(T), rather than on the temporal concentration profile, suggesting that the use of a mixing fan is not necessary as long as all of the mentioned and implicit assumptions are met and the initial and final average indoor concentrations can be reliably determined. A mixing fan can help ensure that these conditions are met. The danger of using a mixing fan is that it could interfere with the combustion process of the appliance.

EXPERIMENTAL

In applying our model to the determination of gas-range emissions, we used an environmental chamber equipped with the supporting air monitoring instrumentation described below.

Environmental Chamber

A schematic of the environmental chamber is shown in Fig. 1. The environmental chamber is 27 m^3, approximately the size of a kitchen or small bedroom. It is situated inside a larger building, which contains and stabilizes the chamber's "outdoor" air. (All outdoor measurements referred to in this paper were taken inside the larger building.) The chamber floor

is concrete and the walls and ceiling are sheetrock that has been taped and sealed. A remotely operated gas stove equipped with a range hood is located inside the chamber. The air-exchange rate, due to infiltration, varied from 0.24 to 0.42 air changes per hour (ach) with no mechanical ventilation. Using the range hood (0.76 m above the range) increases the air exchange rate to 7.0 ach. Intermediate values are obtained by varying an adjustable orifice attached to the inlet of the range hood. A three-speed 0.030-m (12-inch) oscillating fan was placed in a corner of the chamber and operated at low speed when used for mixing.

Instrumentation

The parameters measured and the techniques and/or instrumentation used are summarized in Table 1 and represented schematically in Fig. 1. All sampling probes used were located in the center of the chamber at a height of approximately 1.5 meters.

Most measurements of indoor air quality were conducted by the Mobile Atmospheric Research Laboratory (MARL), which is capable of remote, multipoint sampling for such pollutants as SO_2, NO, NO_2, CO, CO_2 and O_3 (see Fig. 1). Gas-phase samples are drawn into the MARL through a teflon tube with a teflon filter on the inlet side that restricts particles from entering the sampling system and the instruments. This teflon filter is changed daily to prevent particles from accumulating and contaminating the gaseous sample. The residence time of the sample in the teflon tube is 2.4 seconds.

A commercial permeation tube was used to generate SO_2 and NO_2 calibration gas, and calibrated tank gases were used for CO, CO_2, NO, and O_2. All continuous gas analyzers were calibrated daily.

Separate probes were used, with appropriate precautions to maintain pollutant integrity, to monitor formaldehyde (HCHO) and particulates. Time-weighted average HCHO concentrations were measured over a period of 30 minutes by means of a modified pararosaniline technique recently developed by Miksch et al. (1981) at the Lawrence Berkeley Laboratory.

Particulates were monitored on a real-time basis using an electrical aerosol analyzer designed to measure the number concentration and size distribution of particulates between 0.01 and 0.5 um in diameter (Whitby, 1976). Volume concentrations were obtained by assuming particles to be spherical and mass concentrations were obtained by assuming a particle density of 2.0 g cm^{-3}.

Particles were also size-segregated to isolate the combustion particles, and the fine fraction (<2.5 μm) was collected onto filters for subsequent laboratory analysis of mass and composition. Sampling times were typically thirty minutes. Samples used to determine particulate sulfur concentration were collected by means of an Automatic Dichotomous Air Sampler (ADAS) which uses virtual impaction to separate the fine fraction onto teflon filters (Loo et al., 1976). These samples were analyzed by X-ray fluorescence (Giauque et al., 1973). Samples for mass and carbon determination were size-segregated using a tandem-filter arrangement (Parker et al., 1977) and were collected on teflon and quartz fiber filters, respectively. Fine particulate mass was determined gravimetrically, and carbon content was determined by combusting the aerosol sample in oxygen and measuring the resulting carbon dioxide (Mueller et al., 1970).

Measurement Protocol

The measurement protocol was based on determining the emission rate model parameters listed in Equation (4). The procedures we followed are summarized below:

V: The volume was determined with a tape measure to be 27 m^3.

R: The gas consumption rate was measured using a dry test meter in the natural gas line supplied to the appliance.

T: The duration of constant source strength is the same as the duration of constant gas consumption rate and was determined from the gas consumption profile.

a: The air exchange rate was determined after the appliance was turned off (i.e., when S = 0). It was determined for each experiment by using a non-reactive gas (i.e., one with k = 0 and P = 1 such as CO or CO_2) as a tracer. Equation (2) was then rewritten as:

$$C(T+t) - C_o = [C(T)-C_o]e^{-at} \tag{5}$$

By taking the natural logarithm of both sides, a was easily determined by regression. (Typically, the first data point used in this regression ranges from t = 10 min for experiments with a mixing fan to t = 20 min for experiments without a mixing fan. This allows the chamber to stabilize and thereby avoids biasing the results.)

k: The indoor pollutant reactivity was determined in a manner similar to that used to determine a. The combustion appliance was operated long enough to ensure that

$$C(T) >> C_o \tag{6a}$$

and

$$C(T) >> C(0) \tag{6b}$$

Equation (3), after S = 0, then reduces to:

$$C\ (T+t) = C(T)e^{-(a+k)t} \tag{7}$$

By taking the natural logarithm of both sides, a+k was determined. (k can be determined since a is known from the previous calculation.)

C(T): The peak indoor concentration was determined from Equation (5) for CO, CO_2 and O_2 and from Equation (7) for SO_2, NO_x, HCHO, and fine particles.

C(O): The initial indoor concentration was measured before the appliance was fired.

C_o: The outdoor concentration was measured before and after the appliance test for CO, CO_2, SO_2, NO_x, and O_2 and was measured simultaneously for HCHO and fine particles.

P: The outdoor pollutant penetration factor is determined when S = 0 and an equilibrium indoor/outdoor concentration is established. By inserting S = 0 and letting t approach infinity, Equation (2) reduces to:

$$C(\infty) = \frac{PaC_o}{(a+k)} \tag{8}$$

Since $C(\infty)/C_o$ is measured and both a and k are known, P can now be calculated by rearranging Equation (8):

$$P = \frac{C(\infty)}{C_o} \frac{(a+k)}{a} \tag{9}$$

<u>Special procedures used for calculating HCHO and non-continuous particulate data</u>. Special procedures were used to calculate C(T) and a + k for HCHO and fine particles collected on a non-continuous basis. For HCHO, successive one-half hour samples were collected after the gas range was turned off. By integrating Equation (7) from t_1 to t_2 we get:

$$\overline{C}\ (T + t_1,\ T + t_2) = \overline{C}_1 = \frac{C(T)}{a + k}\ [\ e^{-(a + k)t_1} - e^{-(a + k)t_2}] \tag{10}$$

Based on two successive sample concentrations, $\overline{C}_1$ and $\overline{C}_2$, sampled for equal time intervals it can be shown that

$$(a + k) = \frac{\ln \overline{C}_1 - \ln \overline{C}_2}{(t_2 - t_1)} \tag{11}$$

A value for k was determined for each experiment by inserting the air exchange rate, a, obtained from Equation (5) into Equation (11). C(T) was determined from Equation (10).

For non-continuous particulate data (i.e., for fine carbon, sulfur, and mass data), k was determined from our real-time particulate analyzer and C(T) was determined from Equation (10).

RESULTS AND DISCUSSION

Initial experiments were conducted without using a mixing fan in order to simulate the concentrations that could be expected in an enclosed residential kitchen. Figure 2 shows the NO_2 concentrations when the gas range oven was operated for one hour at 180 ^oC (350 ^oF) at various air exchange rates. At 0.25 ach no mechanical ventilation was used. A restricting orifice attached to the range hood was used to obtain air exchange rates of 1.0 and 2.5 ach. The range hood was operated normally to obtain an air exchange rate of 7.0 ach. Using the range hood in its normal mode was very effective in preventing pollution build-up inside the chamber.

In determining volumetric emission rates (in cm^3 kJ^{-1}) by means of our model, we used NO_x rather than compute individual emission rates for NO and NO_2 because the volumetric NO_2-to-NO ratio varies widely from experiment to experiment and, in most cases, even within a single experiment. Volumetric NO_2-to-NO ratios varied from 0.4 to 2.0. Mass emission rates (in μg kJ^{-1}) for NO_x were reported in terms of N.

All pollutant emission rates were calculated from data obtained when the chamber was operated without mechanical ventilation (i.e., when the air exchange rate was between 0.24 and 0.42 ach). Initial oven experiments were conducted without the mixing fan. Equation (3) was used to calculate the two pollutant source strengths--one resulting from the initial burn cycle (t=0 to 11 min) and the other from the steady-state operation of the oven (t=11 to 60 min). Figure 3 compares the NO_x concentration measured at the sampling probe location with that calculated from Equation (2). The calculated concentration is slightly lower than the measured concentration probably because the plume of emissions passed the probe before fully mixing within the chamber space.

Figure 4 shows the results of an experiment conducted with a mixing fan in operation. Under these conditions, the calculated and measured concentrations agreed very well both before and after the stove was turned off.

Table 2 compares the pollutant emission rates determined from oven experiments with and without mixing. The results reported represent a time-weighted average of emission rates measured during the initial burn cycle and during steady-state operation. Using "modern" testing techniques (Snedecor and Cochran, 1967) we determined that for CO_2, NO_x and SO_2, the two emission rates were statistically indiscernible at the 10% level whereas the CO emission rates were statistically discernible at the 5% level. Further investigation showed that CO concentration increase in the chamber was discontinuous during the oven experiments when the mixing fan was on. The effect was related to improper positioning of the fan, which probably interrupted the oxygen supply to the flame. The effect strongly influenced the CO levels, but was not observable in any of the other gaseous pollutant levels (see Fig.4).

Because the precision of our model was generally highest when the mixing fan was properly used, the fan was operated during measurements of pollutant emission rates from top burners. Precautions were taken to assure that the fan did not interfere with burner operation. (Visual inspection of the CO data showed no discontinuities, thus confirming that the fan was not interfering with the combustion process.) Table 3 summarizes the emission rates for the top burners and oven, excluding the unrealistic CO oven data obtained using the mixing fan improperly.

The major difference between pollutant emissions from top burners and from the oven was that more fine particles were emitted from the top burners than from the oven. This may reflect burner tuning conditions rather than some inherent difference between the top burners and oven. Figure 5 shows the measured and calculated mass concentrations of fine particles under 0.5 μm in diameter. Figure 6, shows the time-varying size distribution of the particles emitted from the top burners. As evident, the majority of particles emitted are below 0.5 μm in diameter; particles in this size range are respirable, and have a high probability of penetrating the deep regions of the lung (Task Group on Lung Dynamics, 1966).

The major component of the particles was carbon, and the amount of carbon emitted was consistent from one experiment to another. Total particulate mass emissions, however, were not consistent. This finding suggests that there is a variable, non-carbon component of particulate mass emitted by the top burners. Of this variable particulate component, sulfur, as sulfate, accounted for less than 10%. Water vapor may be responsible for this variable component although no correlation was found between the water vapor density inside the chamber and the particulate emission rate from the top burners.

Comparing our findings with those reported by others shows certain discrepancies that are possibly attributable to differences the techniques employed and/or differences in appliance tuning. For CO emission, Himmel and DeWerth (1974) reported average values of 24 $\mu g\ kJ^{-1}$ for top burners and 16 $\mu g\ kJ^{-1}$ for the oven under "well adjusted" conditions and average values of 160 $\mu g\ kJ^{-1}$ for top burners and 65 $\mu g\ kJ^{-1}$ for the oven under "poorly adjusted" conditions. Cote et al. (1974) reported CO emissions between 66 and 220 $\mu g\ kJ^{-1}$ for top burners and between 130 and 430 $\mu g\ kJ^{-1}$ for the oven, values that agree well with the data reported here (200 $\mu g\ kJ^{-1}$ for top burners and 226 $\mu g\ kJ^{-1}$ for the oven). Both Himmel and DeWerth and Cote et al. report higher NO_x emissions than we obtained from our calculations. Himmel and DeWerth reported an average value of 13 $\mu g\ kJ^{-1}$ of NO_x (as N) for both the top burners and oven under well adjusted conditions and 12 $\mu g\ kJ^{-1}$ for the top burners and oven under poorly adjusted conditions. While Cote et al. reported values between 15 and 20 $\mu g\ kJ^{-1}$ of NO_x (as N) for the top burners and between 12 and 43 $\mu g\ kJ^{-1}$ for the oven. Our results averaged 6.2 and 9.0 $\mu g\ kJ^{-1}$ for the oven and top burners, respectively.

One of the more interesting outgrowths of using an indoor air quality model to determine emission rates is that indoor pollutant reactivities (k) and outdoor penetration factors (P) can also be determined. The reactivities and outdoor penetration factors of the four reactive pollutants measured are presented in Table 4. Values obtained indicate that pollutant reactivity can be as important as air exchange rate in removing indoor pol-

lutants, especially when the air exchange rate is low.

CONCLUSIONS

Comparison of data derived from application of a mathematical model with pollutant data measured in an experimental chamber indicate that such a model can serve as a useful tool for calculating emission rates from a variety of pollution sources. The use of a mixing fan appears to enhance the model's validity especially when only one location is sampled but may be undesirable in cases where the characteristics of the pollution source are disturbed by the fan. The model can also be used to create a temporal pollution profile as well as determine important parameters such as indoor pollutant reactivity and outdoor pollutant penetration factors.

This work points out the need to characterize the use patterns and tuning characteristics of gas appliances currently in use. With application of the model described in this paper, and with knowledge of gas appliance use patterns and operating conditions one could estimate indoor pollutant concentrations due to unvented indoor gas appliance emissions as well as evaluate the effect of reduced house infiltration or control strategies on these concentrations. The use of a range hood appears to be an effective control strategy which should be investigated further.

Results reported here combined with those reported by other researchers indicate that some pollutant emissions, especially CO, may be highly dependent upon appliance tuning; this effect should be further investigated. The observed NO_2-to-NO ratios observed in this study were highly variably, which indicates a need to investigate NO and NO_2 reactions in indoor environments.

ACKNOWLEDGEMENTS

This work was supported by the Director, Office of Energy Research, Office of Health and Environmental Research, Human Health and Assessments Division of the U.S. Department of Energy under Contract No. W-7405-ENG-48.

REFERENCES

Alonzo J., Cohen B.L., Rudolph H., Jow H.N. and Frohliger J.O. (1979) Indoor-outdoor relationships for airborne particulate matter of outdoor origin. Atmospheric Environment 13, 55-60.

Cote W.A., Wade III W.A., and Yocum J.E. (1974) A Study of Indoor Air Quality. Environmental Protection Agency, Washington, D.C. (EPA-650/4-74-042).

Dockery D.W. and Spengler J.D. (1981) Indoor-outdoor relationships of respirable sulfates and particles. Atmospheric Environment 15, 335-343.

Giauque R.D., Goulding F.S., Jaklevic J.M., and Pehl R.L. (1973) Trace element determination with semiconductor detector X-ray spectrometers. Analytical Chemistry 45, 671-681.

Himmel R.L. and DeWerth D.W. (1974) Evaluation of the Pollutant Emissions from Gas-Fired Range. American Gas Association Laboratories, Cleveland, OH (Report No. 1492).

Hollowell C.D., Budnitz R.J., and Traynor G.W. (1977) Combustion-generated indoor air pollution. Proceedings of the Fourth International Clean Air Congress, Tokyo, Japan, 16-20 May 1977, pp. 684-687. Tokyo, Japanese Union of Air Pollution Prevention Associations.

Loo B.W., Jaklevic J.M., and Goulding F.S. (1976) Dichotomous virtual impactors for large scale monitoring of airborne particulate matter. Fine Particles: Aerosol Generation, Measurements, Sampling, and Analysis pp. 311-350. Academic Press, Inc., New York.

Melia R.J.W., Florey C. du V., Darby S.C., Palmes E.D., and Goldstein B.D. (1978) Differences in NO_2 levels in kitchens with gas or electric cookers. Atmospheric Environment 12, 1379-1381.

Miksch R.R., Anthon D.W., Fanning L.Z., Hollowell C.D., Revzan K., and Glanville J. (1981) Modified pararosanaline method for the determination of formaldehyde in air. Analytical Chemistry, 53, 2118-2123.

Mueller P.K., Mosley R.W., and Pierce L.B. (1970) Carbonate and non-carbonate carbon in atmospheric particles. Proceedings of the Second International Clean Air Congress, Washington, D.C., 6-11 December 1970, pp. 532-539. Academic Press, Inc., New York.

Palmes E.D., Tomczyk C., and DiMattio J. (1977) Average NO_2 concentrations in dwellings with gas or electric stoves. Atmospheric Environment 11, 869-872.

Parker R.D., Buzzard G.H., Dzubay T.G., and Bell J.P. (1977) A two stage respirable aerosol sampler using Nuclepore filters in series. Atmospheric Environment 11, 617-621.

Snedecor G.W. and Cochran W.G. (1967) Statistical Methods, pp. 91-119. The Iowa State University Press, Ames, Iowa.

Task Group on Lung Dynamics (1966) Deposition and retention models for internal dosimetry of the human respiratory tract. Health Physics 12, 173-207.

Whitby K.T. (1976) Electrical measurements of aerosols. Fine Particles: Aerosol Generation, Measurement, Sampling, and Analysis, pp. 581-624. Academic Press, Inc., New York.

Yamanaka S., Hirose H., and Takada S. (1979) Nitrogen oxides emissions from domestic kerosene-fired and gas-fired appliances. Atmospheric Environment 13, 407-412.

Table 1. Indoor air quality measurement techniques/instrumentation

Parameter	Technique/Instrumentation
Gases	
SO_2	UV fluorescence
NO, NO_2, NO_x	Chemiluminescence
O_3	UV absorption
CO	Nondispersive infrared absorption
CO_2	Nondispersive infrared absorption
O_2	Magnetic susceptibility
HCHO	Modified pararosaniline method (Miksch *et al.*, 1981)
Aerosols	
Number concentration and size distribution	Electrical mobility analysis (Whitby, 1976)
Fine particle collection	Virtual impaction (Loo *et al.*, 1976)/ Tandem filtration (Parker *et al.*, 1977)
Laboratory aerosol analysis	
Mass	Gravimetric analysis
Sulfur	X-ray fluorescence (Giauque *et al.*, 1973)
Carbon	Combustion/gas chromatography (Mueller *et al.*, 1970)
Miscellaneous	
Temperature	Thermistor probe
Dewpoint	Lithium chloride probe
Natural gas consumption	Dry test meter

Table 2. Comparison of pollutant emission rates from oven, calculated with and without operation of mixing fan

	Oven operated for 1 hour at 180°C (350°F)					
	with mixing			without mixing		
Pollutant	Mean ($\mu g\ kJ^{-1}$)	Standard Deviation ($\mu g\ kJ^{-1}$)	# Runs	Mean ($\mu g\ kJ^{-1}$)	Standard Deviation ($\mu g\ kJ^{-1}$)	# Runs
CO	515	64	2	226	17	2
CO_2	43,150	1,830	6	41,850	3,300	3
NO_x (as N)	6.19	0.06	2	6.17	0.87	4
SO_2	0.12	0.01	2	0.10	0.02	3

Table 3. Summary of pollutant emissions rates from gas range

Pollutant	Oven[a] Mean ($\mu g\ kJ^{-1}$)	Oven[a] Standard Deviation ($\mu g\ kJ^{-1}$)	Oven[a] Range ($\mu g\ kJ^{-1}$)	Oven[a] # Runs	Top burners[b] Mean ($\mu g\ kJ^{-1}$)	Top burners[b] Standard Deviation ($\mu g\ kJ^{-1}$)	Top burners[b] Range ($\mu g\ kJ^{-1}$)	Top burners[b] # Runs
Gases								
CO	226	17	214-238	2	200	34	172-249	5
CO_2	42,700	2,300	38,380-46,360	9	45,320	1,700	43,920-47,600	4
NO_x (as N)	6.17	0.67	4.98-7.03	6	9.0	1.3	6.9-10.5	6
NO[c]	6.61	-	-	-	9.7	-	-	-
NO_2[c]	10.14	-	-	-	14.8	-	-	-
SO_2	0.11	0.02	0.08-0.13	5	0.16	0.02	0.14-0.18	5
HCHO	2.73	0.41	2.36-3.39	5	1.7	1.1	0.9-2.5	2
O_2	-	-	-	-	78,200	7,300	73,000-83,300	2
Particles (<2.5μm)								
Carbon	< 0.02			2	0.22	0.01	0.21-0.23	3
Sulfur (as $SO_4^{=}$)	< 0.001			2	0.009	0.008	0.001-0.017	4
Mass[d]	< 0.05				0.41	0.19	0.24-0.62	3
Mass (<0.5μm)[e]	0.015	0.001	0.014-0.015	2	0.50	0.36	0.21-1.03	4

[a]Operated at 180°C (350°F) for 1 hour. Fuel consumption rate is 8400 kJ h^{-1}.
[b]Two burners operated for 16 minutes. Fuel consumption rate is 9200 kJ h^{-1} per burner.
[c]Assuming a volumetric NO_2 to NO ratio of 1.0. Our measurements varied from 0.4 to 2.0.
[d]Based on gravimetric analysis of filters.
[e]Based on electrical mobility analysis and assuming a particle density of 2.0 g cm^{-3}.

Table 4. Summary of pollutant reactivities, k, and outdoor penetration factors, P

Pollutants	$k(h^{-1})$			P(unitless)		
	Mean	Standard Deviation	# Runs	Mean	Standard Deviation	# Runs
NO_x	0.15	0.06	11	1.0	<0.1	>10
SO_2	0.23	0.15	12	1.0	<0.1	>10
HCHO	0.40	0.24	5	1.0	<0.1	>10
Particles (<0.5μm)	0.48	0.21	5	0.4	0.1	2

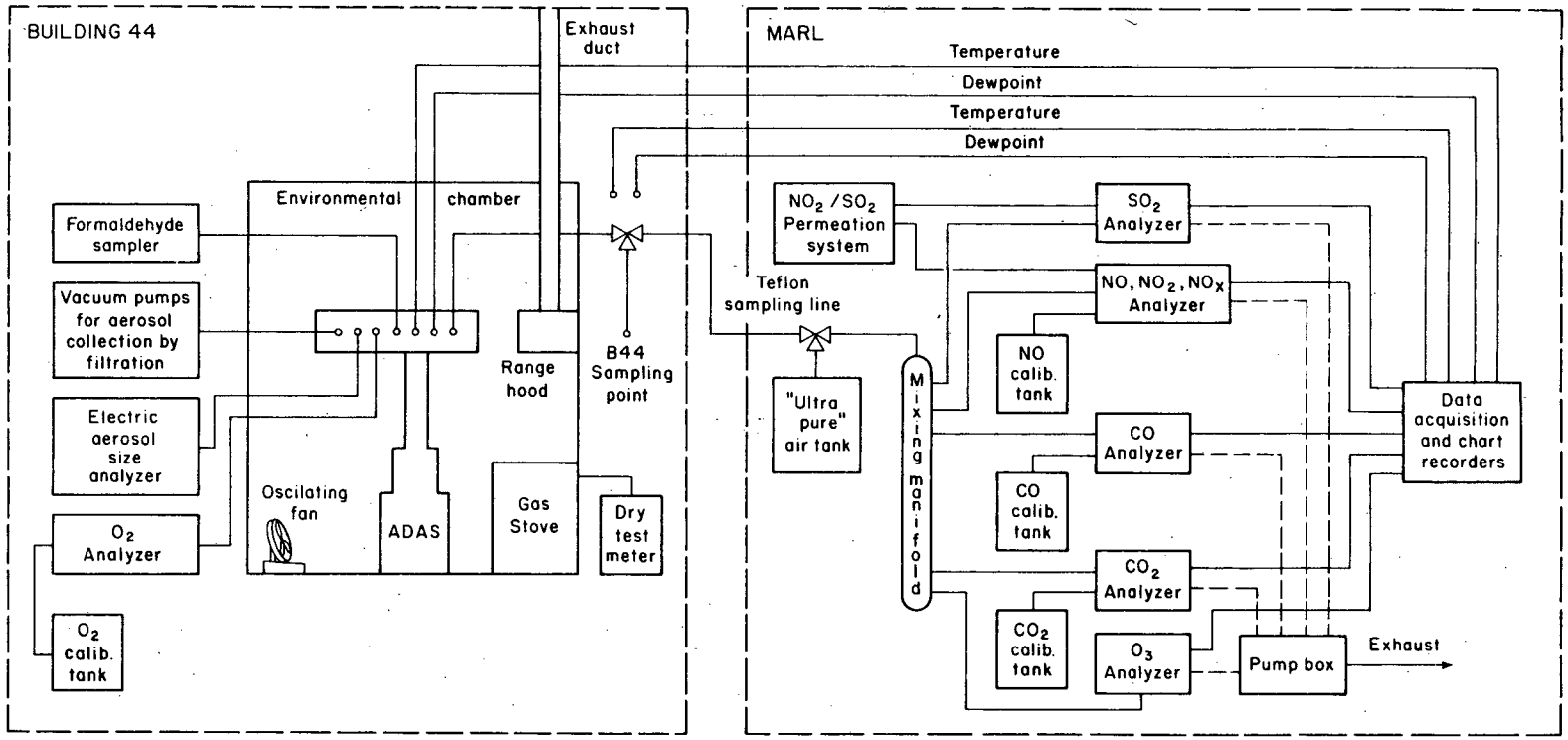

Environmental chamber (side view) and instrumentation

XBL 819-4940

Figure 1. Schematic of environmental chamber (side view) and instrumentation. Building 44 contains the 27-m^3 chamber (3.5 m x 3.5 m x 2.3 m) and the Mobile Atmospheric Research Laboratory (MARL) adjacent to Building 44 contains most of the instrumentation.

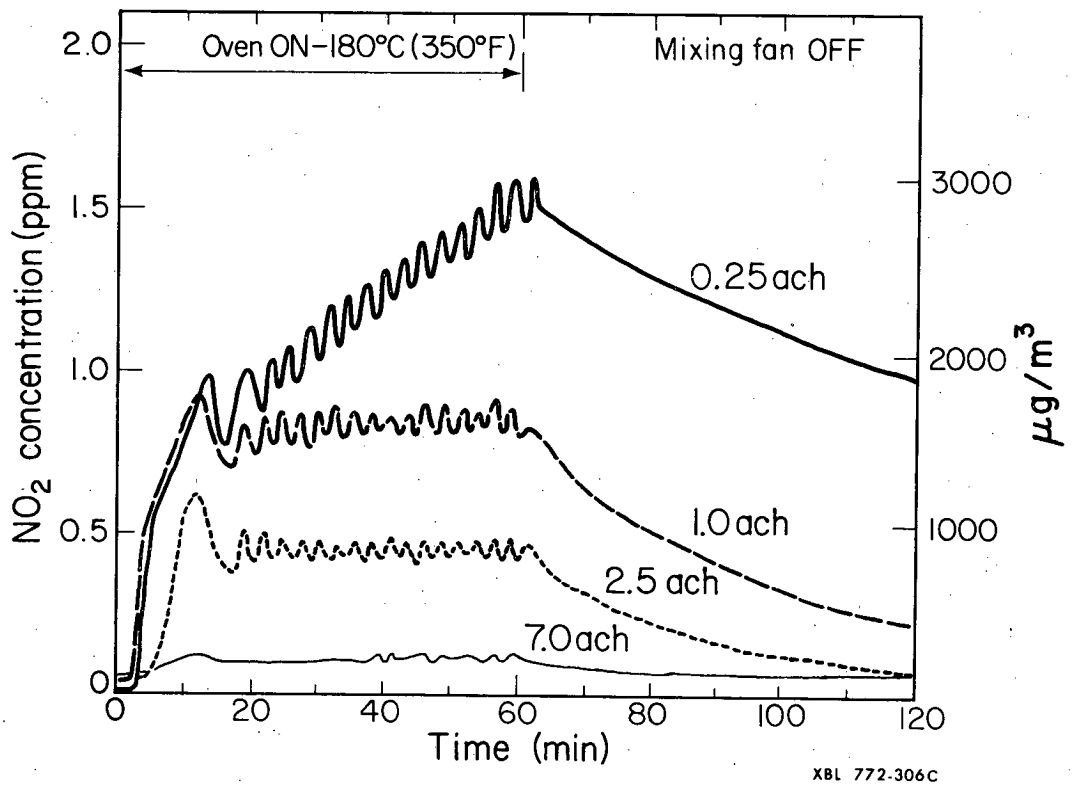

Figure 2. NO_2 concentrations in a 27-m^3 environmental chamber at various air exchange rates, reported as air changes per hour (ach).

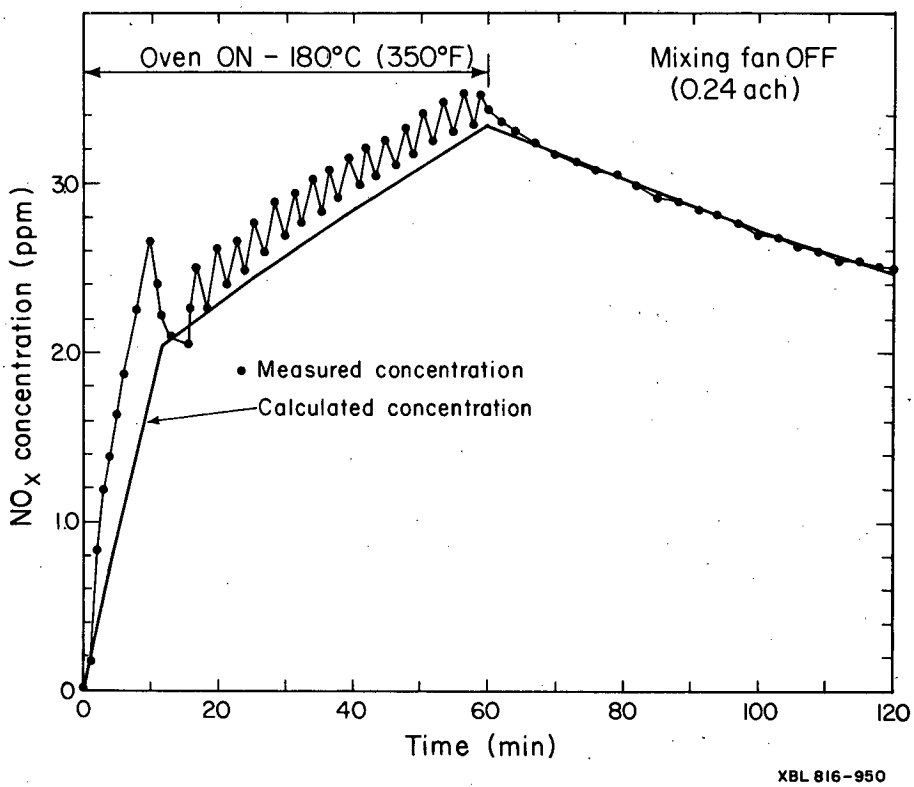

Figure 3. Calculated and measured NO_x concentration profiles without chamber mixing.

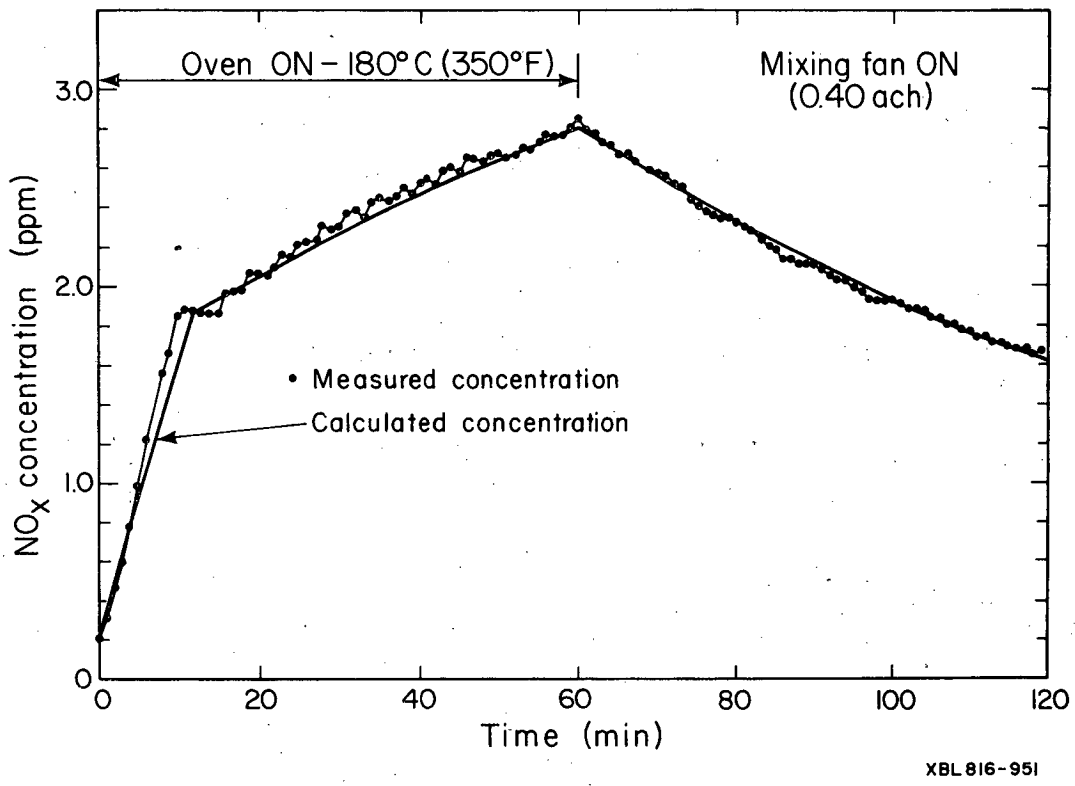

Figure 4. Calculated and measured NO_x concentration profiles with chamber mixing.

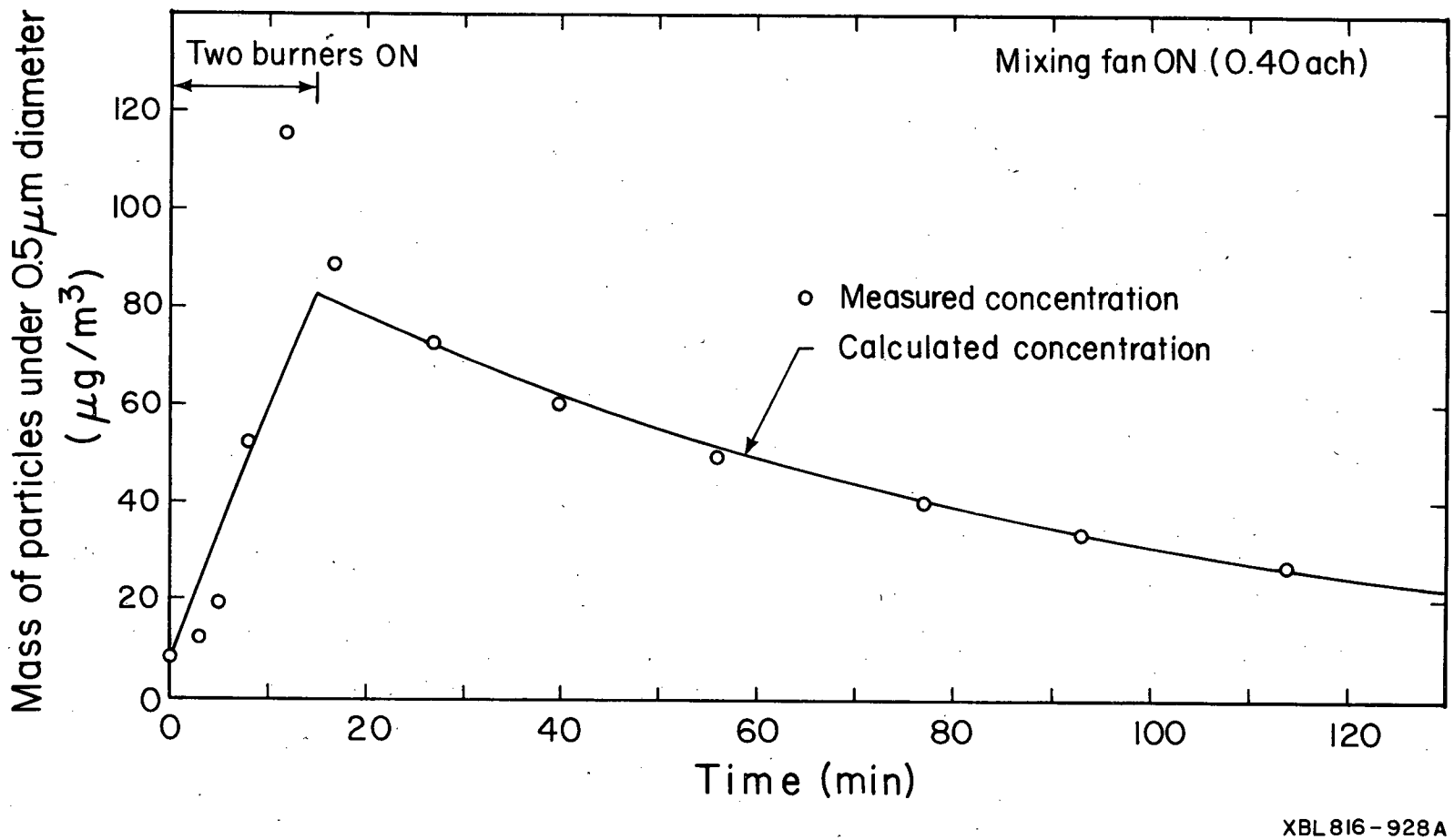

Figure 5. Calculated and measured particulate mass concentration profiles for particles (< 0.5 μm in diameter) emitted from two top burners. Measurements assume spherical particle shape and a particulate density of 2.0 g cm^{-3}.

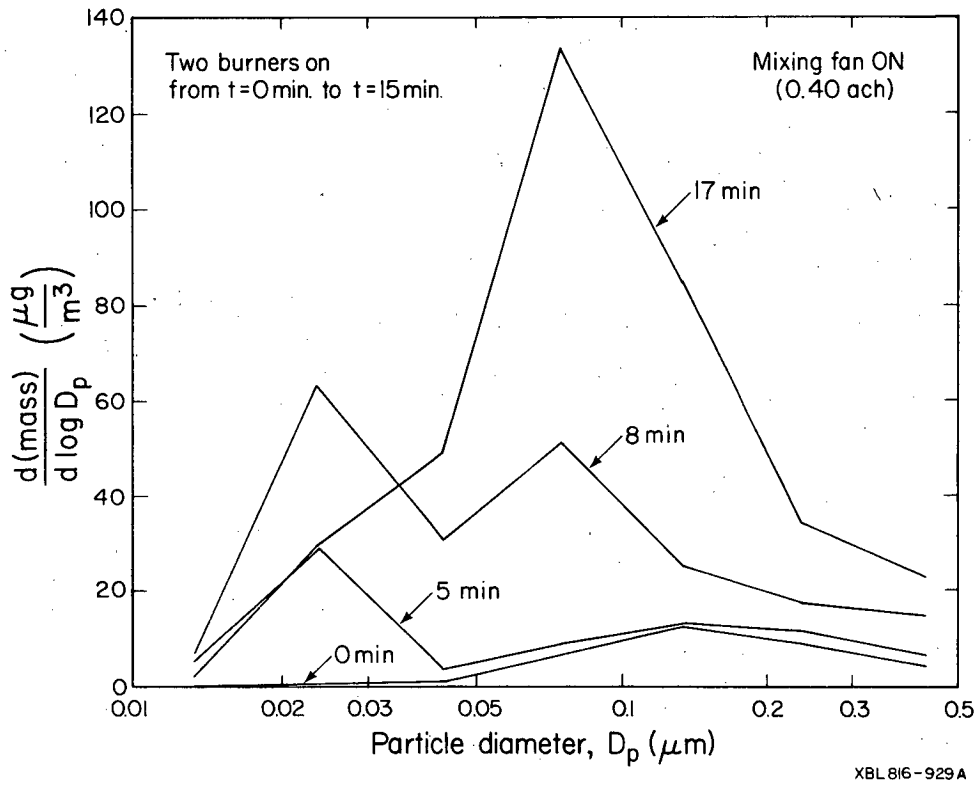

Figure 6. Time-dependent size distribution of particles emitted by the range top burners. Measurements assume spherical particle shape and a particulate density of 2.0 g cm^{-3}.

This report was done with support from the Department of Energy. Any conclusions or opinions expressed in this report represent solely those of the author(s) and not necessarily those of The Regents of the University of California, the Lawrence Berkeley Laboratory or the Department of Energy.

Reference to a company or product name does not imply approval or recommendation of the product by the University of California or the U.S. Department of Energy to the exclusion of others that may be suitable.

TECHNICAL INFORMATION DEPARTMENT
LAWRENCE BERKELEY LABORATORY
UNIVERSITY OF CALIFORNIA
BERKELEY, CALIFORNIA 94720

AAG770
LBL Libraries