LBL-9909 c.2
UC-61 repl.

Lawrence Berkeley Laboratory

UNIVERSITY OF CALIFORNIA

ENERGY & ENVIRONMENT DIVISION

PROCESS DEVELOPMENT STUDIES ON THE BIOCONVERSION OF CELLULOSE AND PRODUCTION OF ETHANOL

Charles R. Wilke and Harvey W. Blanch

RECEIVED
LAWRENCE
BERKELEY LABORATORY
JUL 17 1981
LIBRARY AND
DOCUMENTS

September 1979

TWO-WEEK LOAN COPY

This is a Library Circulating Copy which may be borrowed for two weeks. For a personal retention copy, call Tech. Info. Division, Ext. 6782

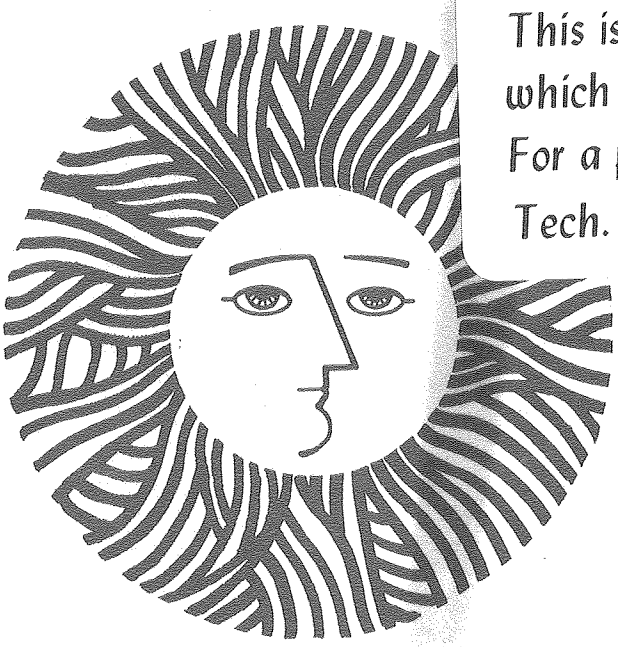

Prepared for the U.S. Department of Energy under Contract W-7405-ENG-48

LBL-9909 c2 repl.

DISCLAIMER

This document was prepared as an account of work sponsored by the United States Government. While this document is believed to contain correct information, neither the United States Government nor any agency thereof, nor the Regents of the University of California, nor any of their employees, makes any warranty, express or implied, or assumes any legal responsibility for the accuracy, completeness, or usefulness of any information, apparatus, product, or process disclosed, or represents that its use would not infringe privately owned rights. Reference herein to any specific commercial product, process, or service by its trade name, trademark, manufacturer, or otherwise, does not necessarily constitute or imply its endorsement, recommendation, or favoring by the United States Government or any agency thereof, or the Regents of the University of California. The views and opinions of authors expressed herein do not necessarily state or reflect those of the United States Government or any agency thereof or the Regents of the University of California.

LBL-9909

PROCESS DEVELOPMENT STUDIES ON THE BIOCONVERSION OF CELLULOSE AND PRODUCTION OF ETHANOL

Lawrence Berkeley Laboratory
Charles R. Wilke, Principal Investigator
Harvey W. Blanch, Co-Investigator

Report of Work Progress

September 1979

This work was supported by the U. S. Department of Energy under Contract W-7405-ENG-48

TABLE OF CONTENTS

I. Raw Materials and Process Evaluation

A. Enzymatic Hydrolysis of Bagasse Pith
A. Sciamanna

B. High Pressure Hydrogen Chloride Process
R.P. Freitas

II. Enzyme Fermentation Studies

A. Cellulase Production by Batch Fermentation
K. Tangnu

B. Studies on Composition of Cellulase
Dale Wiley

C. Enzyme Recovery
George Dove and Kai-Ye Fung

III. Ethanol Fermentation Studies

A. Media Development and Growth Factors in Ethanol Fermentation
Harry Wong

B. Process Development Studies on Ethanol Production
Brian Maiorella and Tom Glenchur

IV. Utilization of Hemicellulose Sugars

A. Xylose Fermentation
S. Rosenberg and Tom Delfino

B. Isolation of Xylose Fermenting Organisms
S. Rosenberg and Tonya Hill

I. RAW MATERIALS AND PROCESS EVALUATION

A. Enzymatic Hydrolysis of Bagasse Pith

We recently received approximately 2 KG of bagasse pith fraction (sucrose pre-extracted) from Intercane Systems, Inc., at Windsor, Ontario, Canada that was separated using their Tilby Cane Separator. The request for the sample originated with E. Lipinsky of Battelle, Columbus, Ohio via the Joseph E. Atchinson Consultants, Inc. of New York City, because of the relatively poor results found by enzymatic hydrolysis of bagasse rind fiber fraction.(1)

The bagasse pith received was white, fluffy-wooly fibers similar in physical appearance to wood that is steam exploded (Masonite Process). Since the stirring equipment used in our hydrolysis reactors are not powerful enough to stir long fluffy fibers that ball up in aqueous mixtures the pith was 2 mm Wiley milled. In ambient humidity the material was 91.8% dry. Samples of the Wiley milled material were enzymatically hydrolyzed in 5 w% suspensions with *Trichoderma viride* cellulase enzyme, filter paper activity of 3.83, as performed previously for all substrates studied (1). The results are shown in Table 1. As can be seen, the pith fraction is about three times more reactive than the bagasse rind fiber fraction (Table 2, Ref. 1) though still low compared to other residues studied.

(a) Dilute Acid Pretreatment and Pentosan Extraction

Pretreatment of the bagasse pith (98.3 grams dry) in a 5.7 w% suspension with 0.9 w% (0.09 *M*) sulfuric acid at 100°C for 5 and 1/2 hours improved the yield of sugar produced by enzymatic hydrolysis on the acid treated substrate by a factor of approximately 2.8. The overall carbohydrate conversion (including the sugar in the acid liquor) is about 57%, nearly twice the amount as obtained with the bagasse rind fiber fraction.

The results of the acid treatment and enzymatic hydrolysis on the acid

Table 1

40 Hour Enzyme Hydrolysis Original Bagasse Pith

Basis: 100 lbs. of 2 mm Wiley Milled Material

Glucose	=	9.98
Xylose	=	1.14
Cellobiose	=	0.13
	$\sum$ =	11.3 lbs., which

approximately equal to 18% carbohydrate conversion and a residue of 82.4 lbs.

treated substrate are shown in Tables 2 and 3, respectively. The analysis of bagasse pith will be completed in the near future. It should be noted that the analysis reported in the previous progress report (Ref. 1, Table 1) as bagasse should be corrected to read bagasse rind fiber fraction. An unfortunate mix-up was made by the shipper. In any event, the analysis of Florida bagasse would be a combination of the pith and rind fiber fraction, 1 part and 2.5 parts, respectively.

B. High Pressure HCl Process

Re: LBL-9909

This section (pages 3 and page 6) is deleted because of matter subject to patent not released by DOE.

Table 2

Acid Extraction of Bagasse Pith

Basis: 100 lbs. of Original Material
(Sugars in Acid Liquor)

Glucose	=	0.1
Galactose	=	0.06
Mannose	=	0.08
Xylose	=	15.7
Arabinose	=	0.06
	$\sum$ =	16.0 lbs.

of sugar and treated residue of 68.2 lbs.
for enzymatic hydrolysis.

Table 3

40 Hour Enzyme Hydrolysis of Acid Treated Bagasse Pith

Basis: 100 lbs. of Original Material

Glucose	=	16.5
Cellobiose	=	2.07
Xylose	=	2.74
	$\sum$ =	21.3 lbs of sugar and a

residue of 45.4 lbs. The approximate carbohydrate conversion is 48%, and with the sugars in the acid liquor it is 57%.

II. ENZYME FERMENTATION

A. Batch Fermentation

Trichoderma viride (Rut-C-30) grown on cellulose is an excellent source of cellulase suitable for further process development studies.

Fermentation operations were conducted in 5 and 14 liter New Brunswick fermentors. The medium as devised by Mandels was used for all experiments (with miror modifications for higher cellulose concentrations) except that urea was deleted from the medium unless otherwise indicated. Three cellulose concentrations (1, 2.5 and 5.0%) were tested to determine the maximum levels of cellulase activity obtainable in submerged culture. Temperature and pH profiling was tried to increase viable cell mass to maximum levels and thereby enhance fermentor productivity at the higher substrate levels. The effect of Tween 80 and urea concentration on cellulase production was also determined.

Table 4 gives the summary of the effects of control variables on state variables. It was observed by Wilke and Yang (2) and 31°C and a pH of 4.5 for the initial 48 hours and then 28°C and maintaining pH above 3.3 for the remainder of the fermentation time period was optimum for cellulose production.

In runs #1 and #2, pH and temperature were kept at 4 and 31°C,

Table 4

Effect of control variables on state variables

Operating Conditions						State Variables				
#	pH	Temp°C	S_o%	T.80%	C/N	FPA	β-glu.	C_1	C_x	S.P.
1	4 up to 48 hrs, after 48 hrs. decrease to	31° 0-2D 28° 2-8D	1.0	0.02	8.4	1.64	2.3	0.06	38	3.4
2	3.3 and was controlled not to go below 3.3	31° 0-2D 25° 2-8D	1.0	0.02	8.4	1.7	2.3	0.06	40	3.3
3	Controlled not to go below 4.0	31° 0-2D 25° 2-8D	1.0	0.02	8.4	2.0	3.55	0.169	44	3.4
4	Controlled not to go below 5.0	31° 0-2D 25° 2-8D	1.0	0.02	8.4	2.1	3.35	0.173	44	3.25
5	Controlled not to go below 5.0	31° 0-35H 25°RT	1.0	0.02	8.4	2.1	4.25	0.2	40	3.45
6	Controlled not to go below 5.0	31° 0-18H 25° RT	1.0	0.02	8.4	2.1	4.75	0.17	40	3.2
7	Controlled not to go below 5.0	31° 0-9H 25° RT	1.0	0.02	8.4	2.6	2.75	0.18	59.5	2.78
8	Controlled not to go below 5.0	25° 0-8D	1.0	0.02	8.4	3.1	3.3	0.195	84	3.3
9	Controlled not to go below 5.0	28° 0-8D	1.0	0.02	8.4	3.0	4.3	0.26	105	3.3
10	Controlled not to go below 5.0	28° 0-2D 25° 2-8D	1.0	0.02	8.4	2.9	3.9	0.23	115	3.45
11	Controlled not to go below 4.0	25° 0-8D	1.0	0.02	8.4	2.6	1.85	0.2	54	3.15
12	Controlled not to go below 4.0	25° 0-8D	1.0	0.02	8.4	2.1*	1.6	0.23	50	3.35
13	Controlled at 4.0	25° 0-8D	1.0	0.02	8.4	2.76	3.3	0.24	110	3.6
14	Controlled at 6.0	25° 0-8D	1.0	0.02	8.4	2.5	3.1	0.17	70	2.6
15	Controlled at 5.0	25° 0-8D	2.5	0.02	10.29	5.2	10	0.48	210	8.2
16	Controlled not to go below 5.0	25° 0-8D	5.0	0.02	8.1	14.35	26	1.03	348	20

* with urea (0.3 gm/l)

respectively for the initial 48 hours of fermentation. After 48 hours the pH was lowered to 3.3 and was controlled not to go below 3.3 while temperature was kept at 28°C and 25°C, respectively for 2 to 8 days. There appears not to be any appreciable difference in extracellular enzyme activities or soluble protein.

In runs #3 and 4, the pH was controlled not to go below 4 and 5.0, respectively. Temperature was controlled as in run #2. There is definitely an increase in filter paper activity probably because of the increase in β-glucosidase and C_1 activities.

In runs #5 through 8, pH was controlled not to go below 5.0, and the initial temperature of 31°C was controlled for different intervals of time (36, 18, 9 and 0 hr.), while for the rest of the fermentation it was kept at 25°C. There is a definite increase in filter paper activity from 2.1 to 3.2 IU with a substantial increase in C_x (44-84 $IU.ml^{-1}$) activity.

In runs #9 and 10, the pH was controlled not to go below 5.0. The temperature was kept at 28°C for 0 through 8 days for run #9, while for run #10 it was kept for 0 through 2 days and then lowered to 25°C for the rest of the fermentation time period. There is not a substantial increase in filter paper activity, although the β-glucosidase and C_1 activities are higher.

In runs #11 and 12 the pH was not allowed to go below 4 and temperature was kept at 25°C. Moreover, in run #12, the effect of urea was studied. Addition of urea resulted in the decrease in filter paper and β-glucosidase activities.

In runs #13 and 14, the pH was controlled at 4 and 6.0 while the temperature was kept at 25°C. The filter paper activity at pH 4 (2.76 $IU.ml^{-1}$) is higher than at pH 6.0 (2.5 $IU.ml^{-1}$), but is definitely less than when fermentation is conducted at pH $\geq$ 5.0 (run #8).

From the above observations it can be concluded that a temperature of 25°C and pH controlled not to go below 5.0 are optimum for enhanced cellulase production.

In runs #15 and 16, higher levels of cellulose (2.5 and 5.0%), respectively, were used. There is a substantial increase in cellulase activities as well as in soluble protein.

Table 5 shows the comparison of Rut-C-30 with Trichoderma viride QM9414. If we compare runs #2 and 3, the filter paper activity in #3 is slightly higher, but β-glucosidase activity is higher by about 9 times in run #2. This higher level of β-glucosidase would permit more rapid conversion of cellobiose to glucose. This would then decrease the cellobiose inhibition of the C_1 enzyme and hence increase the rate of depolymerization of crystalline cellulose.

If we compare runs #1 and 3 (Table 5), there is an increase in filter paper activity, β-glucosidase, and soluble protein by about 3.7, 25.7 and 1.6 times, respectively.

All of these experiments demonstrate the superiority of Rut-C-30 over Trichoderma viride QM9414.

B. Studies on the Composition of the Cellulase Enzyme

A separation of cellulase components was developed including the following steps:

1) Glass wool filtration of Trichoderma reesii cultures, centrifugation, Millipore filtration and addition of sodium azide to 0.02 wt%.

2) Concentration on Amicon UM2 membrane.

3) Fractionation on Sephadex G-75 to remove low molecular weight compounds.

4) Lyophilization, resuspension to concentrate the pooled fractions.

Table 5

Comparison of Rut-C-30 and Tv-9414

Run #	S_0(%)	Strain	FPA U/ml	B-Glucosidase U/ml	Solution Protein mg/ml	Remarks
1	5.0	Rut-C-30	14.35	26	20	pH 5.0, T-80 level = 0.02%, 25°C
2	2.5	Rut-C-30	5.2	10	8.2	ph = 5.0, T-80 level = 0.02%, T = 25°C
3	5.0	-9414	6.06	1.01	12.68	(0-1Day) pH Allowed to fall to 4 (1-2Day) pH Allowed to fall to 2.8 (2D) raised to 3.3 and controlled not to go below pH 3.3
4	2.5	-9414	4.3	1.15	5.94	same as above

5. Fractionation on DEAE-Sephadex, eluting with an ionic gradient of citrate buffer, pH 5.5.

6. Lyophilization, resuspension to concentrate the components.

A procedure for isoelectric focussing in polyacrylamide slabs was adapted to the study of cellulase proteins. In conjunction with SDS-gel electrophoresis, this provides a visualization of the separation of the enzymes of the cellulase complex obtained by gel-permeation and ion-exchange chromatography.

The kinetics of the components so obtained will be described to provide a more complete model for the hydrolysis of cellulose.

C. Effects of Various Reagents on Cellulase Recovery

Enzyme production represents about 60% of the total cost of producing a sugar solution from cellulose. This cost is high because enzyme recovery is so

Presently, about 20% of the enzyme remains in the sugar solution and can be ultra filtered, dialyzed or adsorbed on new substrate. Another 15% can be obtained by simply washing the residue. 65% remains adsorbed to the residue.

M. Riaz and other investigators in this laboratory (3) have conducted studies to reduce the amount of enzyme adsorbed on corn stover. Riaz optimized the concentration of reagents in the hydrolysis step to keep a high percentage of enzyme in solution. The most encouraging result was 68% recovery using 0.9 M urea in the hydrolysis and 6.0 M in the residue wash. Unfortunately, urea is not easily recoverable and relatively expensive. This report examines some recent attempts to find a less expensive material. The cost is reduced by using 1) a cheaper reagent, 2) a lower concentration, or preferably, 3) an easily recoverable reagent.

Procedures followed were those of Riaz (3). Cellulase enzyme was produced by *Trichoderma viride*, Rutgers strain C-30, with a filter paper activity of 3.5.

The substrate was acid-pretreated Indian corn stover. The hydrolysis samples were centrifuged to remove solids, and the supernate was dialyzed in cellulose acetate tubing at 4°C. The solid was washed and slurried in the concentrated reagent solution. The liquid was treated as described earlier for the supernate. The concentrated reagent solution was occasionally different from the hydrolysis reagent to observe possible advantages by using two reagents. Enzymes assays were determined by the filter paper activity. Product sugar concentrations and soluble protein were measured by DNS and Folin, respectively.

Based on the work by Riaz, an hypothesis was developed suggesting that the small urea molecule is wedged between enzyme molecule and substrate, hindering the permanent adsorption of the enzyme. The distance is not so great as to prevent the hydrolysis of cellulose. There may be a layer effect where either the enzyme or substrate is coated with reagent. Other phenomena may involve various locations on the enzyme. There may be a reaction site, an allosteric site, or a site with the sole function of binding enzyme to the substrate. Each may react differently with the reagent. A working model is being developed to explain recent observations.

There are at least three reasons for a change in enzyme concentration in the liquid due to the added reagent. They are listed below and referenced in the following text. Statements concerning rates are based on limited experience with this enzyme, and the comments are intended to be preliminary estimates only.

#1. The binding site activity has changed, and more or less enzyme is being adsorbed in the substrate, depending on the reagent. The bonding configuration may be altered, changing either the strength or kinetics of the bond. Changes in the binding site may occur relatively slowly or quickly. Kinetics of conformation changes may occur at any rate. The surface of either enzyme or substrate may be physically coated, which would often be a fast process.

#2. There is a permanent denaturation of the enzyme. This deformation may be dependent on the solid support structure present in the system (e.g. substrate). Permanent denaturation is a long process of degradation under moderate conditions.

#3. The enzyme is "salted-out" or precipitated without damaging it. The process is quite rapid, with equilibrium usually achieved quickly.

This discussion refers to hydrolysis samples taken at 40 hours. The samples taken at 20 hours provide confirmation. The "high" recovery refers to the highest total recovery (%) observed for a particular salt at 40 hours. The total recovery is obtained by adding the percentage of enzyme washed from the solid (Table 9 for all runs) to the percentage of enzyme retained in the hydrolysis supernate (Tables 6,7,8).

The results with urea (Table 6, Figure 1) substantiate those of Riaz (3). A "high" recovery of 64% is obtained using 1.0 M urea in the hydrolysis. Less enzyme is being adsorbed to the substrate (#1 above). A high concentration of urea causes permanent denaturation (#3 above).

Several ammonium salts were studied to determine the effect of the ammonium ion. Ammonium sulfate produces a "high" recovery rate of 14% at 0.2 M (Table 6, Figure 1). The data indicate better recovery with no salt. The low values of recovery may be attributed to a "salting-out" effect a moderate salt concentrations, (#3 above). Ammonium sulfate is often used to purify enzyme solutions by this same action. Other salts in this study may precipitate proteins, but quantitative effects are not known.

A series involving ammonium oxalate looked promising initially. A "high" recovery of 40% was obtained with 0.1 M salt (Table 7, Figure 3). A second series (Table 8, Figure 3) conducted in the range of 0.01 - 0.1 M indicates that the 40% value may be in error. Again, better recovery is obtained with no salt. The

Table 6

Recovery of Enzyme (%) with Salts

Run #	Sample Time (hr.)	Compound in Hydrolysis Liquid	Molarity	Recovery in Lignin (%)	Total Recovery (%) Liquid + Solid	Sugar Production (g/l)
1.2	20	none	--	0.174	⊖	⊖
	40	none	--	0.143	0.207	16.2
1.3	20	urea	0.5	0.294	⊖	⊖
	40	urea	0.5	0.328	0.405	11.0
1.4	20	urea	1.0	0.515	⊖	⊖
	40	urea	1.0	0.573	0.648	15.0
1.5	20	urea	2.0	0.776	⊖	⊖
	40	urea	2.0	0.515	0.570	13.4
1.6	20	urea (no substrate)	2.0	0.111	--	--
	40	urea (no substrate)	2.0	0.020	--	--
1.7	20	ammonium sulfate	0.20	0.152	⊖	⊖
		ammonium sulfate	0.20	0.134	0.137	11.4
1.8	20	ammonium sulfate	0.38	0.080	⊖	⊖
	40	ammonium sulfate	0.38	0.079	0.083	1.6
1.9	20	ammonium sulfate	0.76	0.029	⊖	⊖
	40	ammonium sulfate	0.76	0.033	0.038	0.1
1.10	20	ammonium sulfate (no substrate)	0.76	0.717	--	--
	40	ammonium sulfate (no substrate)	0.76	0.867	--	--

See Table 9 for symbol key.

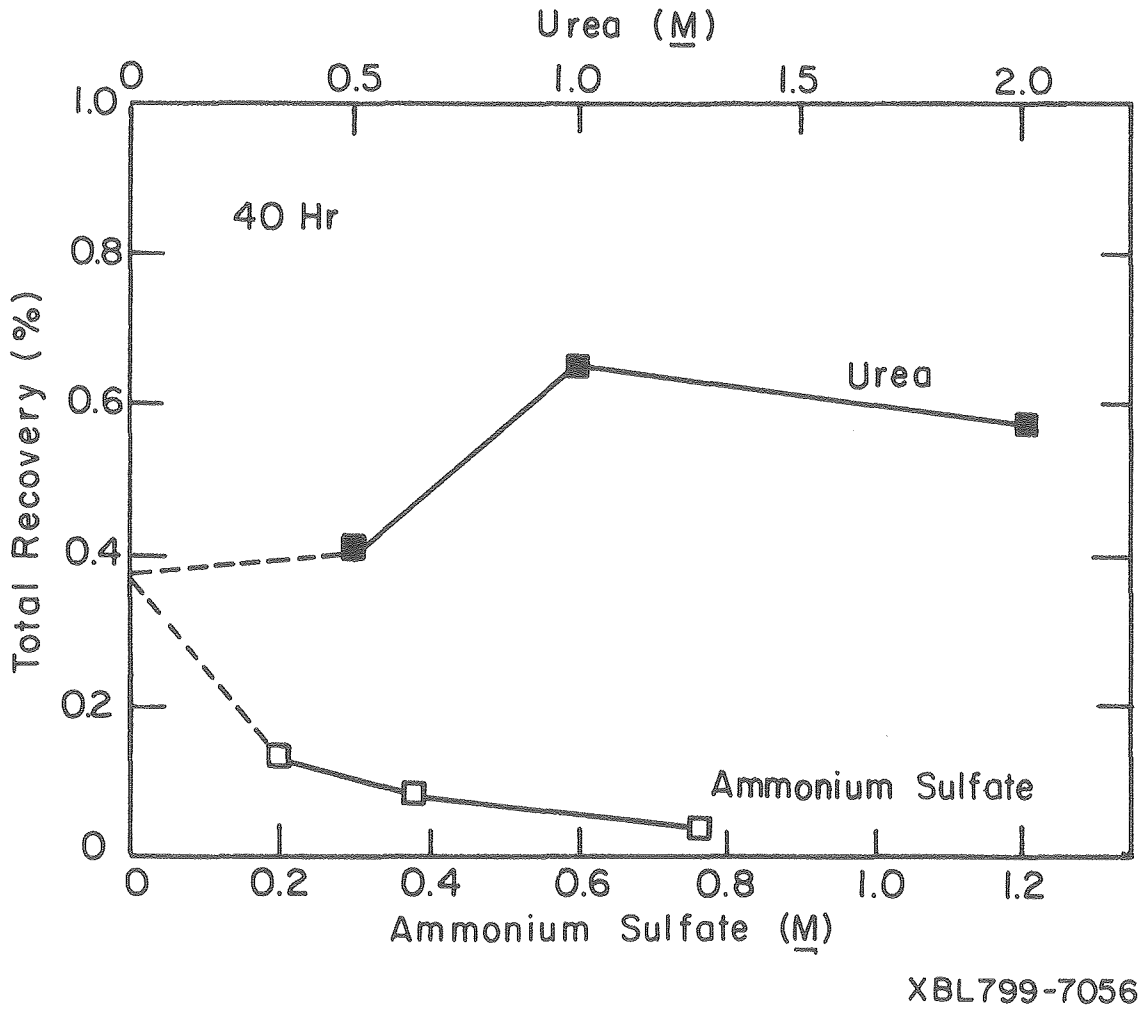

Figure 1. The Effect of Ammonium Sulfate and Urea Concentration on Total Enzyme Recovery.

Table 7

Recovery of Enzyme (%) with Salts

Run #	Sample Time (hr.)	Compound in Hydrolysis Liquid	Molarity	Recovery in Liquid (%)	Total Recovery (%) Liquid + Solid	Sugar Production (g/l)
2.2	20	none	--	0.419	0.471	~~0~~
	40	none	--	0.373	0.396	17.5
2.3	20	glycine	0.2	0.364	0.421	~~0~~
	40	glycine	0.2	0.282	0.323	15.5
2.4	20	glycine	1.0	0.299	0.341	~~0~~
	40	glycine	1.0	0.235	0.268	1.1
2.5	20	glycine	3.0	0.104	0.121	~~0~~
	40	glycine	3.0	0.083	0.089	0.3
2.6	20	glycine (no substrate)	3.0	0.632	--	--
	40	glycine (no substrate)	3.0	~~00~~	--	--
2.7	20	ammonium oxalate	0.1	0.440	0.482	~~0~~
	40	ammonium oxalate	0.1	0.381	0.404	13.7
2.8	20	ammonium oxalate	0.5	0.168	0.203	~~0~~
	40	ammonium oxalate	0.5	0.104	0.112	0.6
2.9	20	ammonium oxalate	0.83	0.095	0.147	~~0~~
	40	ammonium oxalate	0.83	0.073	0.082	0.5
2.10	20	ammonium oxalate (no substrate)	0.83	0.394	--	--
	40	ammonium oxalate (no substrate)	0.83	0.424	--	--

See Table 9 for Symbol Key.

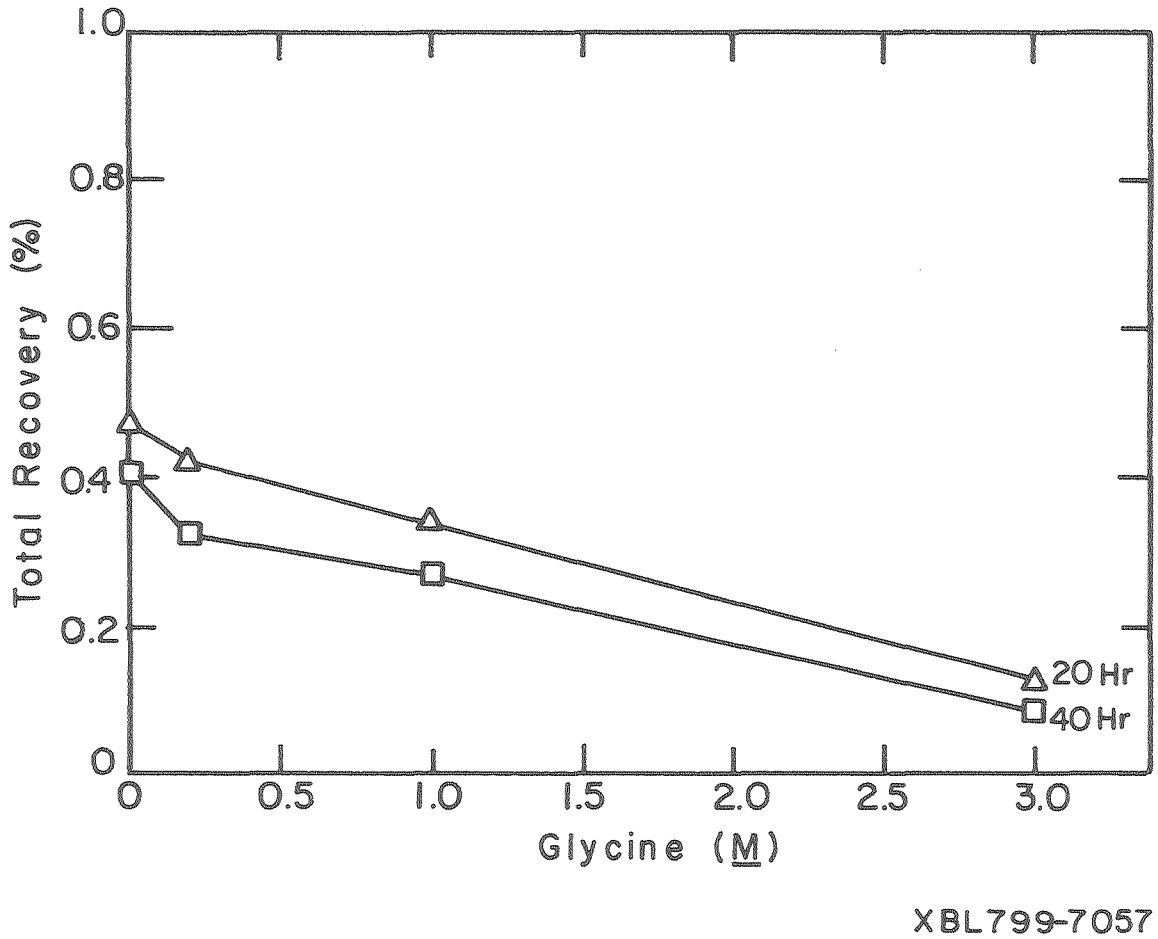

Figure 2. The Effect of Glycine Concentration on Total Enzyme Recovery.

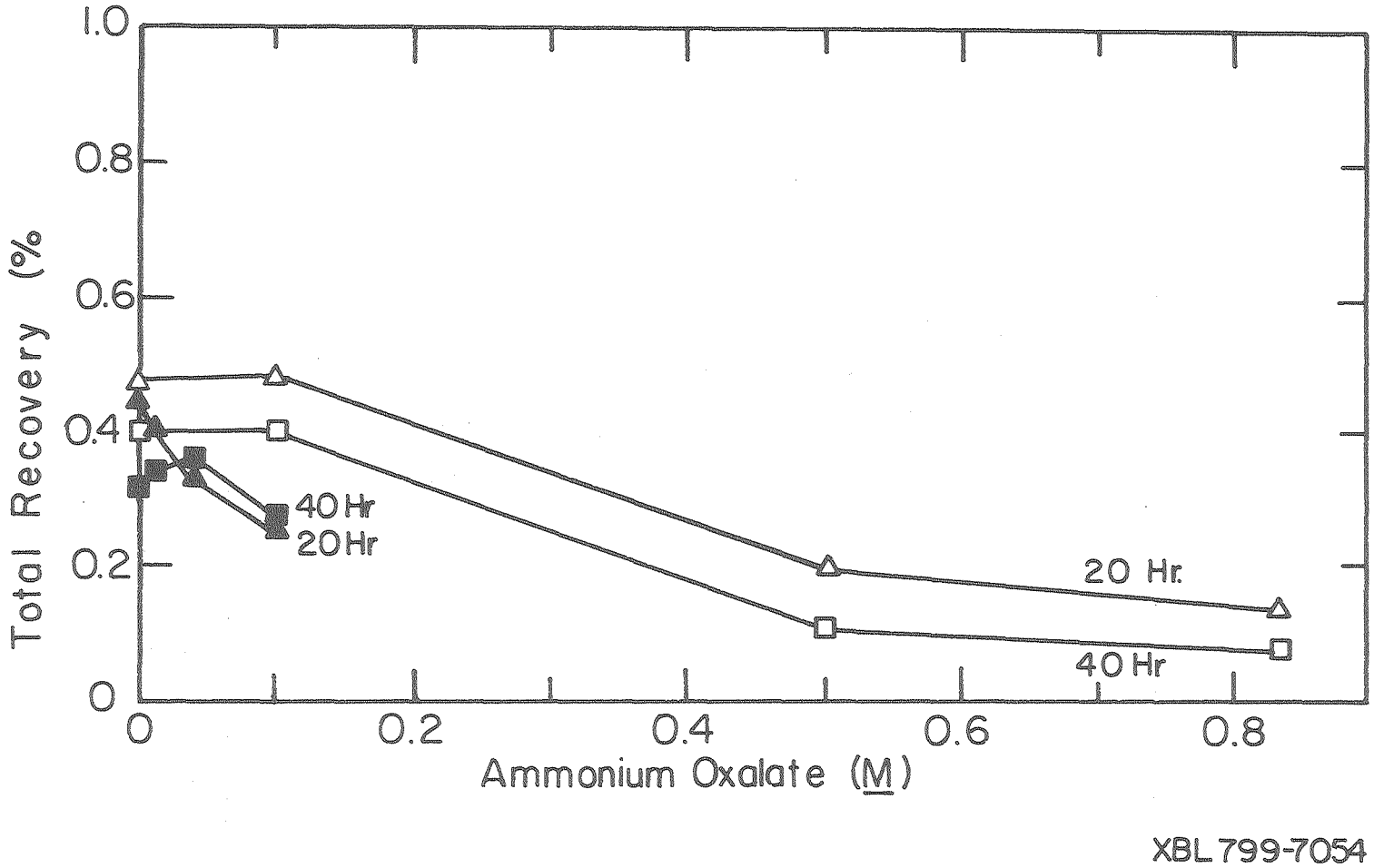

Figure 3. The Effect of Ammonium Oxlate Concentration and Total Enzyme Recovery.

"salting-out" effect is apparently present (#3). Also, there is possibly more adsorption (#1). Several anomalies in the data mask a clear pattern.

Ammonium chloride (Table 8, Figure 4) has a moderate effect on recovery. There is a decrease in recovery (from 32% to 20%) over the range of 0.0-0.94M salt. The relatively large decline in recovery between 20 and 40 hours indicates denaturation (#2).

The urea molecule has two close amine groups that may interact with the carboxyl groups of cellulose. Studies of amino acids may provide insight as to the action of functional groups in the vicinity of bonding sites. Glycine (Table 6, Figure 2) appears to hinder recovery in a linear fashion over the range of 0.0 - 3.0 M because recovery decreases from 40% to 8%. Glycine exhibits a mild "salting-out" effect over a large concentration range of reagent (#3).

Compounds containing nitrogen will continue to be investigated. They have the possible advantage of acting as a nitrogen source for the yeast fermenting the product sugar solution. Thus, the reagent would not have to be removed. It would be carried to the next step of the process in the sugar solution.

Further studies will be conducted with amino acids. Serine and cysteine provide hydroxyl and sulfhydryl groups. Aspartic acid and glutamic acid provide a longer carbon chain, increasing the distance between enzyme and substrate.

Another class of compounds consists of sugar analogs, which may bind preferentially with either enzyme or cellulose.

III. ETHANOL FERMENTATION STUDIES

A. Media Development and Growth Factors in Ethanol Fermentation

In defining the optimal medium for continuous ethanol production by

Table 8

Recovery of Enzyme (%) with Salts

Run #	Sample Time (hr.)	Compound in Hydrolysis Liquid	Molarity	Recovery in Liquid (%)	Total Recovery (%) Liquid + Solid	Sugar Production (g/l)
3.2	20	none	--	0.396	0.443	14.6
	40	none	--	0.291	0.323	17.0
3.3	20	ammonium chloride	0.08	0.294	0.327	14.2
	40	ammonium chloride	0.08	0.255	0.282	15.9
3.4	20	ammonium chloride	0.3	0.404	0.440	11.6
	40	ammonium chloride	0.3	0.206	0.235	12.5
3.5	20	ammonium chloride	0.94*	0.310	0.350	0.1
	40	ammonium chloride	0.94	0.172	0.202	0.1
3.6	20	" (no substrate)	0.94	0.787	--	--
	40	" (no substrate)	0.94	0.945	--	--
3.7	20	ammonium oxalate	0.01	0.366	0.406	14.3
	40	ammonium oxalate	0.01	0.310	0.357	16.0
3.8	20	ammonium oxalate	0.04	0.291	0.334	14.0
	40	ammonium oxalate	0.04	0.328	0.357	15.5
3.9	20	ammonium oxalate	0.10	0.215	0.253	12.3
	40	ammonium oxalate	0.10	0.239	0.274	13.7
3.10	20	" (no substrate)	0.10	0.915	--	--
	40	" (no substrate)	0.10	0.988	--	--

*satuarated (salt crystals present).
See Table 9 for Symbols Key.

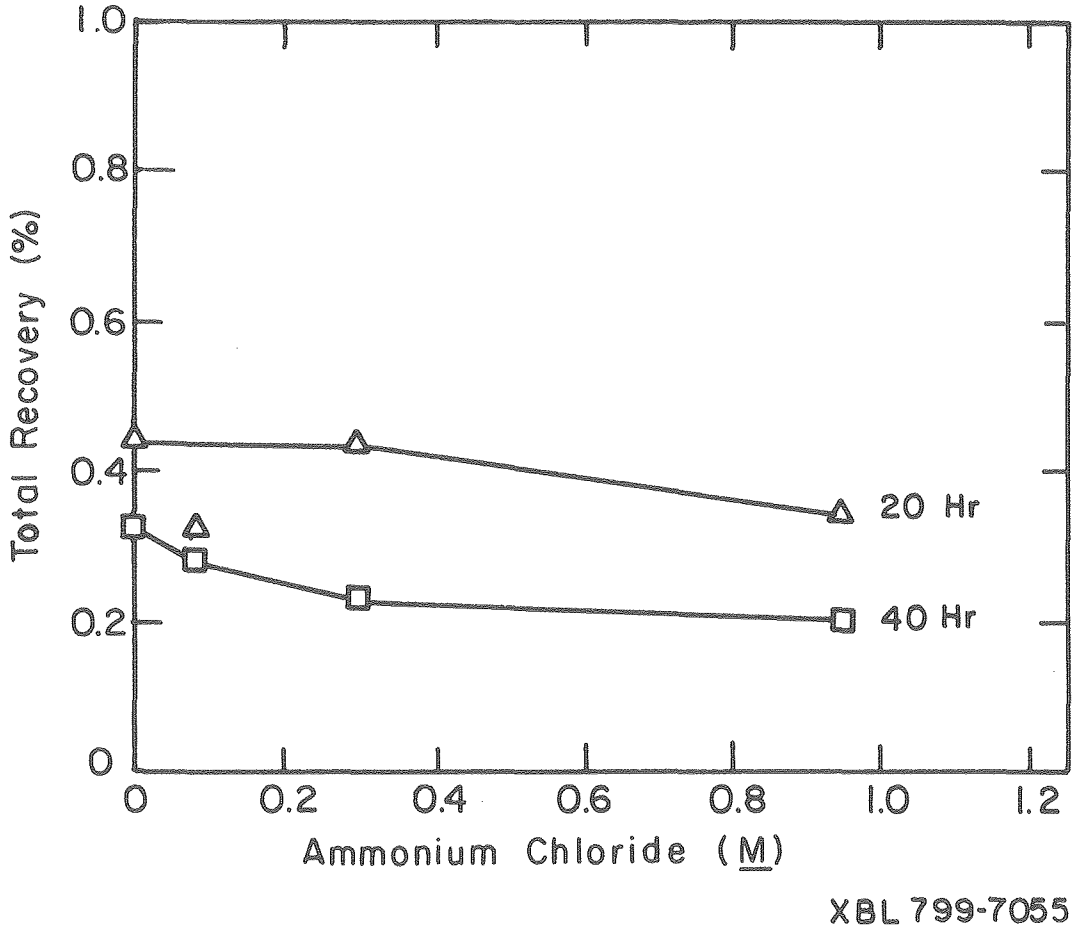

Figure 4. Effect of Ammonium Chloride on Total Enzyme Recovery

Table 9

Recovery of Enzyme (%) in Solid

Run #	Sample Time (hr.)	Compound in Wash Solution	Molarity	Recovery in Solid (%)
1.2	20	urea	3.33	-0-
	40	urea	3.33	0.064
1.3	20	urea	3.33	-0-
	40	urea	3.33	0.077
1.4	20	urea	3.33	-0-
	40	urea	3.33	0.075
1.5	20	urea	3.33	-0-
	40	urea	3.33	0.055
1.6	20			--
	40			--
1.7	20	ammonium sulfate	2.02	-0-
	40	ammonium sulfate	2.02	0.003
1.8	20	ammonium sulfate	2.02	-0-
	40	ammonium sulfate	2.02	0.003
1.9	20	ammonium sulfate	2.02	-0-
	40	ammonium sulfate	2.02	0.005
1.10	20			--
	40			--
2.2	20	glycine	2.6	0.052
	40	ammonium oxalate	0.5	0.023
2.3	20	glycine	2.6	0.057
	40	glycine	2.6	0.041
2.4	20	glycine	2.6	0.042
	40	glycine	2.6	0.033
2.5	20	ammonium oxalate	0.5	0.017
	40	glycine	2.6	0.006
2.6	20			--
	40			--
2.7	20	ammonium oxalate	0.5	0.042
	40	ammonium oxalate	0.5	0.023

continued...

Table 9

Recovery of Enzyme (%) in Solid Continued

Run #	Sample Time (hr.)	Compound in Wash Solution	Molarity	Recovery in Solid (%)
2.8	20	ammonium oxalate	0.5	0.035
	40	ammonium oxalate	0.5	0.008
2.9	20	acetate buffer (pH 5)	0.05	0.052
	40	ammonium oxalate	0.5	0.009
2.10	20			--
	40			--
3.2	20	ammonium chloride	0.94	0.047
	40	ammonium chloride	0.94	0.032
3.3	20	ammonium chloride	1.25	0.033
	40	ammonium	5.00	0.027
3.4	20	ammonium chloride	1.25	0.036
	40	ammonium chloride	5.00	0.029
3.5	20	ammonium chloride	1.25	0.040
	40	ammonium chloride	5.00	0.030
3.6	20			--
	40			--
3.7	20	ammonium oxalate	0.12	0.040
	40	ammonium oxalate	0.24	0.037
3.8	20	ammonium oxalate	0.30	0.043
	40	ammonium oxalate	0.30	0.029
3.9	20	ammonium oxalate	0.30	0.038
	40	ammonium oxalate	0.30	0.035
3.10	20			--
	40			--

Symbols
-- no data possible--refer to previous tables
-Ø- no data taken
-ØØ- data obvious in error

Saccharomyces cerevisiae, the effects of both the dissolved oxygen level in the medium and the oxygen flux to the yeast need to be studied. A carbon balance is also important in studying yeast metabolism, and this requires determining the rate of carbon dioxide production.

To measure dissolved oxygen in the parts per billion range, the fermenter is being equipped with a Rexnord dissolved oxygen analyzer and flow cell. In addition, a redox probe has been added to the fermenter to determine the relation between redox potential and dissolved oxygen.

To obtain the oxygen flux and carbon dioxide production rate, the fermenter is being set up for the measurement of the flow rate and the composition of the inlet and outlet gas streams. The gas analyses will be done with a gas chromatograph equipped with both Porapak Q and molecular sieve columns and will include carbon dioxide, oxygen, nitrogen and ethanol.

B. Process Development Studies on Ethanol Production

Ethanol produced from renewable agricultural resources is an important potential supplement for petroleum derived fuels and chemicals. Ethanol can be mixed in up to a one to nine ratio with gasoline for automotive fuel without modification to the standard auto engine. With modifications (primarily to the carburetor) ethanol can be used exclusively. After a chemical shift to ethylene, a wide range of petrochemicals can be synthesized from fermentative ethanol.

Two major problems are associated with the use of ethanol to replace petroleum derived fuel and chemicals. The cost of fermentation derived ethanol is high (Table 10) and large amounts of energy are required for ethanol production.

The major cost component of fermentative ethanol is sugar

Table 10

ETHANOL PRODUCTION AND MARKET COSTS

FERMENTATIVE ETHANOL MANUFACURING COST: (25 MILLION GALLON PER YEAR FROM CONVENTIONAL OPERATING BATCH PLANTS NOT INCLUDING PROFIT.)	$1.77/GALLON
ETHANOL CHEMICAL MARKET PRICE:	$1.28/GALLON
COST OF ENERGY EQUIVALENT GASOLINE: (ONE GALLON OF ETHANOL CONTAINS THE SAME CHEMICAL ENERGY AS 0.7 GALLONS OF GASOLINE.)	$0.70/GALLON
FEDERAL SUPPORTED PRICE FOR FERMENTATIVE ETHANOL BLENDED INTO GASOHOL: *	$1.70/GALLON

*ADDITIONAL TAX SUPPORTS ARE PROVIDED BY MANY STATES

cost (63% of finished product cost). Currently, sugar from molasses sells for 8.5¢/lb. which alone accounts for a charge of $1.22/gallon for ethanol (Table 11).

The second major cost factor is fermentation plant production cost. Fermentative ethanol is traditionally produced by labor and capital intensive batch techniques. Based on a 25 million gallon per year batch plant design by Cysewski and Wilke (4), the capital cost of a new batch fermentation plant would be 25.4 million dollars with an ethanol manufacturing cost, exclusive of feed materials costs and without profit, of 51.5 ¢/gallon.

Production of sugar by hydrolysis of agricultural wastes is under study by many researchers and offers promise of major reductions to the raw material costs. New fermentation techniques, described here, greatly reduce production costs.

Energy requirements for fermentative ethanol production must be considered on a global basis, including energy consumed in farming (Table 12). A substantial net positive energy return can be claimed by including energy from the burning of farm by-products. If sugar is to become less costly though, these by-products must be used for hydrolysis to produce more sugar raw material, and not for plant steam production. The distillation energy requirement is equivalent to almost one half of the energy available in the ethanol produced, and this energy requirement must be reduced.

1) The Vacu-Ferm Process

The Vacu-ferm process, developed concurrently by Cysewski and Wilke (5), and Ramalingham and Finn (6) was a major step forward in reducing capital equipment and production costs for fermentative ethanol manufacture and is

Table 11

ETHANOL PRODUCTION COST; BATCH FERMENTATION
(25 Million Gallon Per Year Plant)

¢/gallon of EtOH 95 wt%

DIRECT COST--RAW MATERIALS	
NUTRIENT SOLUTION	3.50
WATER	0.23
MOLASSES	122.14
SUBTOTAL	125.87
DIRECT COST--OTHER	
OPERATING LABOR	3.49
ADMINISTRATION	0.52
UTILITIES	
POWER	1.65
COOLING WATER	8.74
45 PSIA STEAM, 600 PSIA STEAM	13.89
MAINTENANCE	5.02
OPERATING SUPPLIES	.75
LABORATORY	.52
SUBTOTAL	34.58
TOTAL DIRECT COST	160.45
FIXED COST	
DEPRECIATION	8.37
LOCAL TAXES	2.51
INSURANCE	.59
TOTAL FIXED COST	11.46
PLANT OVERHEAD	5.42
TOTAL MANUFACTURING COST	177.34
GENERAL EXPENSES	
ADMINISTRATION	.71
RESEARCH AND DEVELOPMENT	.97
FINANCING	10.64
	12.34
TOTAL PRODUCT COST	189.68
GROSS INCOME (with subsidy)	
ALCOHOL SALES (1.70/GAL)	170.00
YEAST SALES (45¢/LB	22.50
GROSS PROFIT	2.82
TAX (50% GROSS PROFIT)	1.41
NET PROFIT	1.41

Table 12

ESTIMATED GLOBAL ENERGY BALANCE FOR PRODUCTION OF ETHANOL FROM MOLASSES*

(ENERGIES ARE IN BTU PER GALLON ANHYDROUS ETHANOL)

ENERGY CONSUMPTION		ENERGY PRODUCTION	
FARMING	47,200	ETHANOL	75,600
SUGAR MILLING AND CONCENTRATING	24,800	FUSEL OILS AND ALDEHYDES	1,100
FEED STERILIZATION	500	FARM BY-PRODUCTS (CANE BAGASSE FOR STEAM GENERATION)	124,500
DISTILLATION			
TO AZEOTROPE	25,100		
TO ANHYDROUS	7,500		
YEAST PRODUCT DRYING	1,400		
SUBTOTAL	106,460	SUBTOTAL	201,200

NET ENERGY PRODUCTION 94,740

*COMPILED FROM ESTIMATES BY VOGELBUSH, SCHELLER, BLACK AND CYSEWSKI

shown in Figure 5. Fermentation is conducted under vacuum (51 mmHg). Ethanol is boiled away at 35°C as it is produced, maintaining beer ethanol concentration at 3.5 wt%. Thus, end product inhibition is removed. Specific ethanol productivity is increased from 0.6/hr., the average rate over the course of an atmospheric batch fermentation, to a continuous 0.8/hr. for vacuum fermentation. With cell recycle to achieve high cell concentrations (123 g/l) in the continuous vacuum fermenter, overall productivities of 80 g ethanol/l.hr. are achieved. The twenty-eight, 50,000 gallon fermenters of the batch plant can be replaced by a single, high efficiency, 40,000 gallon continuous vacuum fermenter.

Energy for boilup in the vacuum fermenter could be provided by external heating. To reduce energy requirements, vapor recompression heating is used instead. Rather than compressing the vapor mixture entirely to atmospheric pressure, the main compressor compresses the vapor to only 118 mm/Hg. At this pressure, the vapors can be passed through a fermenter reboiler with heat exchanged providing for boilup in the fermenter. The liquid ethanol-water mixture can now be pumped with low energy costs to distillation column pressure. A second compressor is required to remove the non-condensible CO_2 and O_2 gases (along with an equilibrium amount of ethanol and water) from the system.

Capital and manufacturing costs (exclusive of feed) are greatly decreased to $13.9 million and 28.9 ¢/gallon, respectively (Tables 13 and 14).

Many potential points for improvement remain in the vacu-ferm design. Oxygen solubility in the beer is greatly reduced under vacuum, and to meet the yeast oxygen maintenance requirement, costly pure oxygen must be sparged into the fermenter. Carbon dioxide is produced along with the ethanol. All this CO_2 gas must be processed by the vacuum compressors. Compressor size and energy requirements are thus much larger than if only the equilibrium ethanol-water

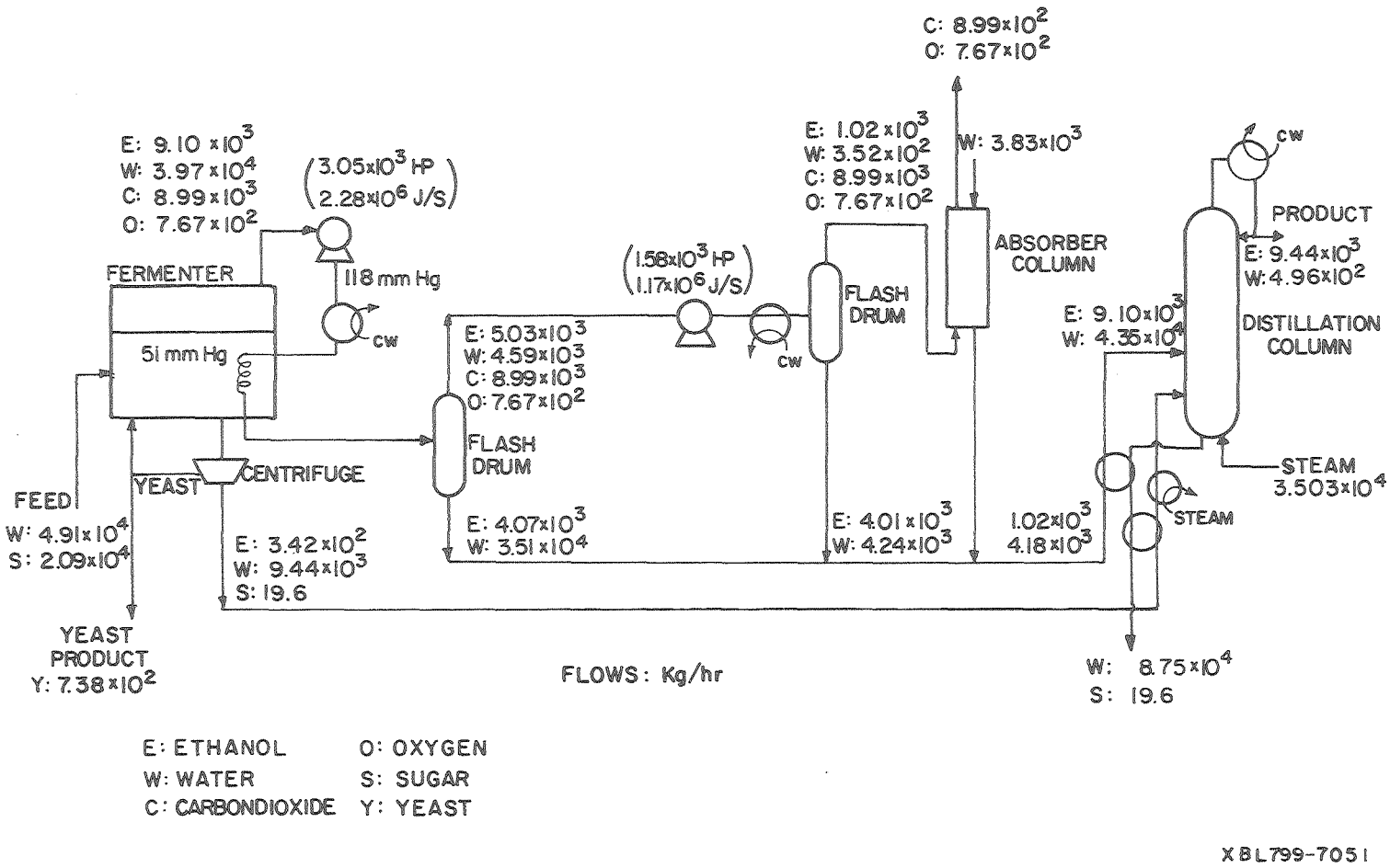
VACU-FERM PROCESS
WITH ATMOSPHERIC DISTILLATION
E: 9.10 x10^3
W: 3.97 x10^4
C: 8.99 x10^3
O: 7.67 x10^2
(3.05x10^3 HP
2.28x10^6 J/S)
118 mm Hg
FERMENTER
51 mm Hg
CW
FEED
W: 4.91x10^4
S: 2.09x10^4
YEAST
CENTRIFUGE
E: 3.42x10^2
W: 9.44x10^3
S: 19.6
YEAST
PRODUCT
Y: 7.38x10^2
E: 5.03x10^3
W: 4.59x10^3
C: 8.99x10^3
O: 7.67x10^2
FLASH
DRUM
E: 4.07x10^3
W: 3.51x10^4
(1.58x10^3 HP
1.17x10^6 J/S)
CW
FLASH
DRUM
E: 1.02x10^3
W: 3.52x10^2
C: 8.99x10^3
O: 7.67x10^2
E: 4.01x10^3
W: 4.24x10^3
C: 8.99x10^2
O: 7.67x10^2
W: 3.83x10^3
ABSORBER
COLUMN
1.02x10^3
4.18x10^3
E: 9.10x10^3
W: 4.35x10^4
CW
PRODUCT
E: 9.44x10^3
W: 4.96x10^2
DISTILLATION
COLUMN
STEAM
STEAM
3.503x10^4
W: 8.75x10^4
S: 19.6
FLOWS: Kg/hr
E: ETHANOL
W: WATER
C: CARBONDIOXIDE
O: OXYGEN
S: SUGAR
Y: YEAST
XBL799-7051

Figure 5

Table 13

VACU-FERM PURCHASED EQUIPMENT SUMMARY

STORAGE (3 Weeks)

MOLASSES	$3x1.5 \times 10^6$ gal. CS	$435,800
ETHANOL	1.64×10^6 gal, CS	147,500
YEAST	3 x 50,000 gal, CS	70,400
		$653,700

FERMENTATION

Fermentor and Agitator	6.2×10^3 ft^3, 110 HP	$173,050
Main Compressor	3050 HP	447,000
2nd Compressor	1589 HP	313,000
Ferm. Reboiler	21,500 ft^3 SS	354,700
Ferm. Trimmer Exchanger	9000 ft^2, CS	62,576
O_2 Sterilizer	.5 x .3 m Glass Fiber	476
Media Sterilizer	8.7 m, SS, insul. pipe	9,700
Media Preheat Exchanger	4500 ft^2 SS	174,300
Nutrient Mix Tank	2160 gal 15 HP Glass Lined	44,696
Gas Liquid Separators	215 gal	1,840
	50 gal	335
2nd Vapor Condensor	6273 ft^2 CS	28,940
Centrifuge	2; bowl type	120,970
Yeast Dryer	2; 1600 lb/hr Cap	60,700
		$1,792,280

ETHANOL RECOVERY

Dist. Column	10 ft. diameter, 38 tray	$189,000
Condenser	2707 ft^2, CS	24,580
F_1 Preheat Exchanger	1040 ft^2	21,900
F_2 Preheat Exchanger	118 ft^2	3,620
F_2 Steam Exchanger	30.5 ft^2	1,680
Ethanol Absorber	70 ft tall, 9.6 ft. diameter, 1 in. rings	175,000
		$415,780

TOTAL PURCHASED EQUIPMENT	$2,861,760
CAPITAL INVESTMENT (4.87 x PURCHASED EQUIPMENT)	$13,934,000

Table 14

VACU-FERM PROCESS OPERATING COSTS (25 MILLION GALLON PER YEAR PLANT CAPACITY)

MANUFACTURING COSTS

DIRECT COSTS--RAW MATERIALS	basis	VAC-FERM (1 atm column) ¢/GAL
NUTRIENT SOLUTION	3.5¢/gal Product	3.50
WATER	$0.80¢/10^3$ gal H_2O	.04
MOLASSES (50% sugar)	$85./ton	122.14
OXYGEN		2.16
RAW MATERIALS SUBTOTAL		127.85
DIRECT COSTS--OTHER		
1. OPERATING LABOR	11 man days $240./man day	1.13
2. ADMINISTRATIVE	15% OP. Labor	.17
3. UTILITIES		
POWER	4.3¢/Kw-hr.	.83
COOLING WATER (75°F)	$0.12/10^3$ gal.	.73
STEAM (45 psia)	$3.99/10^3$ lbm.	3.84
STEAM (600 psia)	$4.90/10^3$ lbm	8.00
4. MAINTENANCE	6% Fixed Capital	2.76
5. OPERATION SUPPLIES	15% Maintenance	.41
6. LABORATORY	15% OP SUPPLIES	.17
PRODUCTION COST SUBTOTAL		18.04
TOTAL DIRECT COST		145.89
FIXED COST		
1. DEPRECIATION	straight-line--10 years zero salvage	4.59
2. LOCAL TAXES	3% of Fixed Capital	1.38
3. INSURANCE	0.7% of Fixed Capital	.32
TOTAL FIXED COST		6.29
PLANT OVERHEAD	60% of ALL LABOR and ADMINISTRATION	2.43
TOTAL MANUFACTURING COST		154.62
GENERAL EXPENSES		7.54
TOTAL PRODUCTION COST		162.15
GROSS INCOME:	ETHANOL SALES ($1.70/gallon)	170.00
	YEAST SALES ($.45/lb)	22.50
GROSS PROFIT		30.45
TAX (50% GROSS PROFIT)		15.22
NET PROFIT		15.22

vapor product was compressed. Ethanol is recovered from the compressed gas stream by condensing in the fermenter reboiler and auxilliary exchangers. Non-condensible (CO_2 and O_2) gases interfere with condensation, decreasing effective heat transfer coefficients and increasing required heat exchanger surface area. The final CO_2 and O_2 gas stream exiting the compressor carries along a substantial fraction (11%) of the ethanol product, and a large ethanol absorber column is required to recover this.

2. Flash-Ferm

The flash-ferm process, originally proposed conceptually by Wilke (7), addresses the limitations of the vacu-ferm process and makes several improvements (Figure 6). An atmospheric distillation is combined with a beer vacuum flashing step. Fermentation is carried out in a single 40,000 gallon atmospheric pressure fermenter. Yeast maintenance oxygen requirement is met with inexpensive sparged air. CO_2 is evolved and vented directly from the fermenter (with no compression required).

To remove ethanol, 3.5 wt% ethanol beer is rapidly cycled between the fermenter and a small vacuum flash vessel where ethanol is boiled away. 2.5 wt% ethanol beer is returned to the fermenter. Only a small amount of CO_2 dissolved in the cycling beer is carried into the flash vessel, and only this CO_2 must be processed through the compressors. Vapor recompression heating is again used. Because the ethanol concentration in the flash vessel must be maintained at less than the 3.5 wt% desired in the fermenter, the equilibrium amount of water carried overhead with the ethanol product is increased relative to that in the vacuferm process. This added water vapor through the first compressor offsets the greatly reduced CO_2 flow. The main

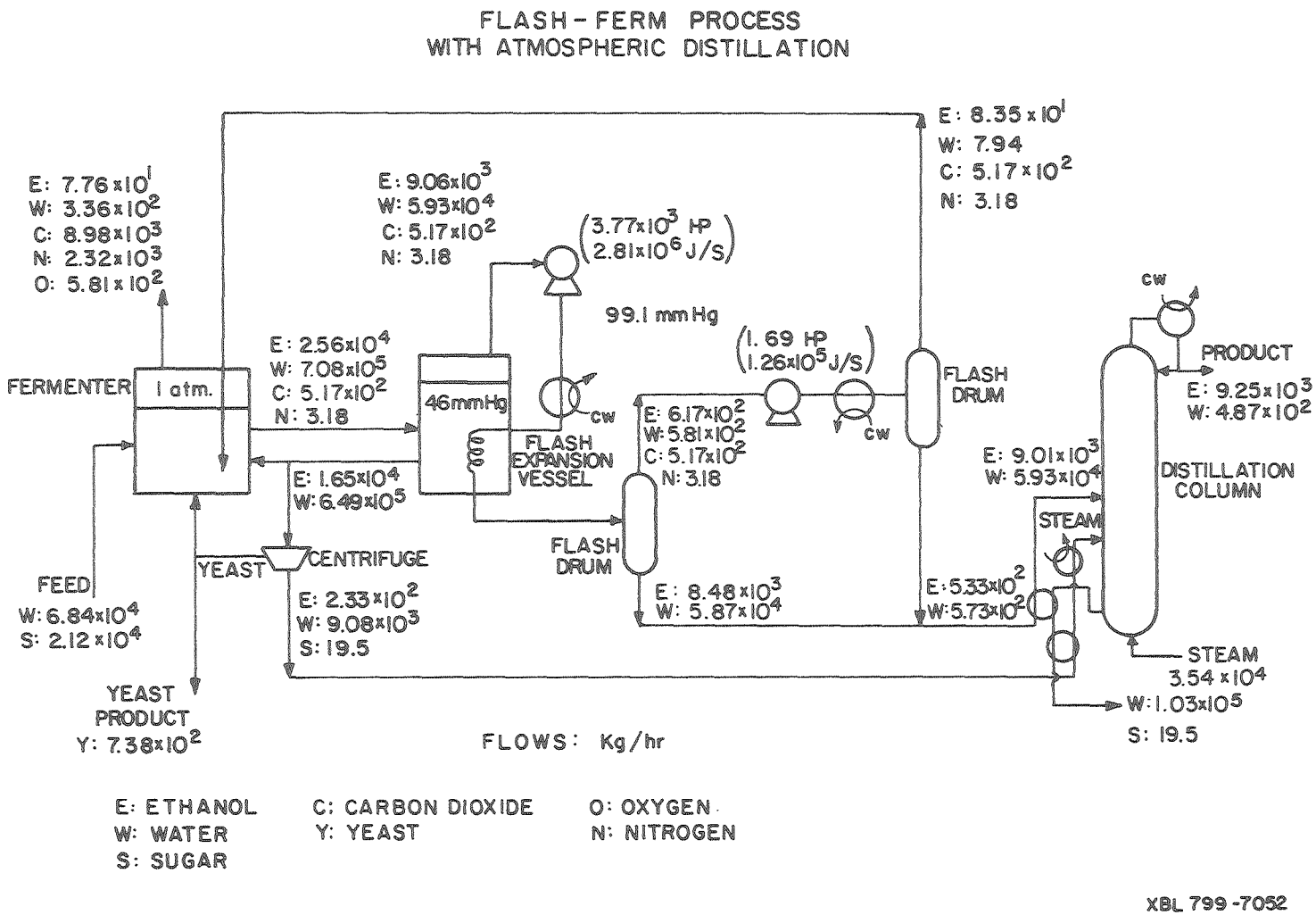
FLASH-FERM PROCESS
WITH ATMOSPHERIC DISTILLATION
E: 7.76×10¹
W: 3.36×10²
C: 8.98×10³
N: 2.32×10³
O: 5.81×10²
E: 9.06×10³
W: 5.93×10⁴
C: 5.17×10²
N: 3.18
(3.77×10³ HP
2.81×10⁶ J/S)
E: 8.35×10¹
W: 7.94
C: 5.17×10²
N: 3.18
99.1 mm Hg
(1.69 HP
1.26×10⁵ J/S)
cw
PRODUCT
E: 9.25×10³
W: 4.87×10²
FERMENTER
1 atm.
E: 2.56×10⁴
W: 7.08×10⁵
C: 5.17×10²
N: 3.18
46mmHg
cw
FLASH
EXPANSION
VESSEL
E: 6.17×10²
W: 5.81×10²
C: 5.17×10²
N: 3.18
cw
FLASH
DRUM
E: 9.01×10³
W: 5.93×10⁴
DISTILLATION
COLUMN
E: 1.65×10⁴
W: 6.49×10⁵
STEAM
YEAST
CENTRIFUGE
FLASH
DRUM
FEED
W: 6.84×10⁴
S: 2.12×10⁴
E: 2.33×10²
W: 9.08×10³
S: 19.5
E: 8.48×10³
W: 5.87×10⁴
E: 5.33×10²
W: 5.73×10²
STEAM
3.54×10⁴
W: 1.03×10⁵
S: 19.5
YEAST
PRODUCT
Y: 7.38×10²
FLOWS: Kg/hr
E: ETHANOL
W: WATER
S: SUGAR
C: CARBON DIOXIDE
Y: YEAST
O: OXYGEN
N: NITROGEN
XBL 799-7052

Figure 6.

compressor is made slightly larger than in the vacu-ferm case. The capacity requirement of the second compressor is greatly reduced, however, and an overall energy and capital cost savings results. Very little ethanol (less than 1% of the total product) is carried away with the CO_2 finally vented, and this can be largely recovered by sparging the CO_2 back through the dilute beer solution in the fermenter. The costly ethanol absorber is thus eliminated.

The resulting capital and operating costs for the flash-ferm system are presented in Tables 15 and 16. Ethanol manufacturing cost (exclusive of feed) is reduced to 26.4 ¢/gal. as compared to 28.9 ¢/gal. for the vacu-ferm and 51.5 ¢/gal. for the batch process.

The overall energy requirement (including feed sterilization and yeast product dry/wt.) is 30,000 Btu/gal., which is reduced from the vacu-ferm energy requirement of 30,500 Btu/gal., but still higher than the energy requirement for a batch process which requires no vacuum compressors. It should be noted, however, that the assumption that the pressure shift has no adverse effect has not been fully substantiated experimentally. Experiments conducted by Wilke and Yang (8) involving simultaneous shifts in both pressure and temperature (35°C to 45°C) resulted in loss of cell viability and reduced ethanol production. A further preliminary experiment, however, indicated that the pressure shift alone has no adverse effect. Additional experiments are in preparation to test the isothermal operation more fully.

3) Vacuum Distillation

The flashing operation of both the vacu-ferm and flash-ferm processes provides an initial concentration step. Ethanol concentration in the main feed to the distillation column of the flash-ferm process is 13.2 wt%, much higher than the 5 wt% column feed in the batch process. Yet, the distillation

Table 15

FLASH-FERM PURCHASED EQUIPMENT SUMMARY

STORAGE (3 weeks

MOLASSES	$435.800
ETHANOL	147.500
YEAST	70,400
	$635,700

FERMENTATION

Fermenter and Agitator.....6.2×10^3 ft^3, 110HP	$173,050
Main Comp.....3770 HP	492,000
2nd Comp.....169HP	51,400
Flash Exchanger.4; 7950 ft^2, SS	514,000
Flash Pot.....1500 gal foam breaker	44,160
Flash Circulating Pump, 6; 500 gpm Capacity	31,930
Flash Trimmer Exchanger, 2 x 5625 ft^2 CS	80,450
Air Sterilizer..... 8;.5 x .3 m glass fiber	2,220
Media Sterilizer	11,230
Media Preheat Exchanger, 5756 ft^2, SS	209,000
Nutrient Mix Tank...3000 gal	49,166
Gas Liquid Separator 301 gal	2,514
10 gal	170
2nd Vap. Cond..... 350 ft^2	3,350
Centrifuge..... 2 bowl type	120,970
Yeast dryer.....2; 1600 lb/hr capacity	60,700
Air Compressor..... 30 psig, 90 HP	50,270
	$1,896,580

ETHANOL RECOVERY

Dist. Column..... 10 ft, diameter	189,000
Condenser ..... 2707 ft^2, CS	24,580
F_1 Preheat Exchanger, 1524 ft^2, CS	15,420
F_2 Preheat Exchanger, 103 ft^2, CS	3,350
F_2 Exchanger 56 ft^2, CS	1,800
	$ 234,150

TOTAL PURCHASED EQUIPMENT	$2,784,430
TOTAL CAPITAL INVESTMENT (4.87 x PRUCHASED EQUIP.)	$13,560,000

Table 16

FLASH-FERM OPERATING COSTS (25 MILLION GALLON PER YEAR CAPACITY)

MANUFACTURING COSTS

	basis	VACU-FLASH latm column %/GAL
NUTRIENT SOLUTION	3.5¢/gal PRODUCT	3.50
WATER	$0.80/10^3$ gal H_2O	.06
MOLASSES (50% sugar)	$85./ton	122.14
OXYGEN		0
RAW MATERIALS SUBTOTAL		125.70
DIRECT COSTS--OTHER		
1. OPERATING LABOR	11 man days $240./man day	1.13
2. ADMINISTRATIVE	15% OP. LABOR	.17
3. UTILITIES		
POWER	4.3¢/Kw.HR.	.83
COOLING WATER (75°F)	$0.12/10^3$ GAL.	.83
STEAM (45 Psig)	$3.99/10^3$ LBM	4.93
STEAM (600 Psig)	$4.90/10^3$ LBM	6.78
4. MAINTENANCE	6% FIXED CAP.	2.68
5 OPERATING SUPPLIES	15% MAINTENANCE	.40
6. LABORATORY	15% OP. SUPPLIES	.17
PRODUCTION COST SUBTOTAL		17.91
TOTAL DIRECT COST		143.62
FIXED COST		
1. DEPRECIATION	straight-line--10 years (zero salvage)	4.47
2 LOCAL TAXES	3% of FIXED CAPITAL	1.34
3 INSURANCE	0.70% of FIXED CAPITAL	0.31
TOTAL FIXED COST		6.12
PLANT OVERHEAD	60% OF ALL LABOR AND ADMINISTRATION	2.39
TOTAL MANUFACTURING COST		152.13
GENERAL EXPENSES		7.36
TOTAL PRODUCTION COST		159.49
GROSS INCOME:	ETHANOL SALES ($1.70/gallon)	170.22
	YEAST SALES ($ .45/lb	22.50
GROSS PROFIT		33.11
TAX (50% GROSS PROFIT)		16.56
NET PROFIT		16.56

energies in both cases are similar (25,100 Btu/gal. for batch 24,200 Btu/gal. for vacu-flash).

Most of the energy for the distillation to 95 wt% goes to providing boilup for the high required reflux. Little reduction in distillation energy results from the initial flash concentration step because the atmospheric pressure distillation reflux is fixed by a high concentration pinch point, not by the feed composition (as would ordinarily be the case). This is readily seen on a McCabe-Thiele diagram (Figure 7) where the slope of the distillation operating line is equal to the internal reflux ratio. The atmospheric pressure ethanol-water system exhibits an azeotrope at 89.5 mol% ethanol. The volatility of ethanol is only slightly greater than that of water as this composition is approached (moving upward). The operating line, which may not cross the equilibrium curve, is thus constrained to have a steep incline--corresponding to a high required reflux ratio.

Advantage can be taken of the initial concentration step afforded by the vacuum flashing operation if vacuum distillation is used. The ethanol-water equilibrium behavior is altered at reduced pressures, the azeotrope gradually moving to higher and higher ethanol concentrations and finally disappearing below 90 mmHg. The high end pinch is extreme if vacuum distillation is used to produce pure ethanol and this is not a practical process. However, the high end pinch at below 95 wt% ethanol concentration is greatly reduced at low pressure as compared to atmospheric (Figure 8). Thus, if 95 wt% ethanol product is desired, the flash-ferm process combined with a vacuum distillation gives considerable energy and cost savings.

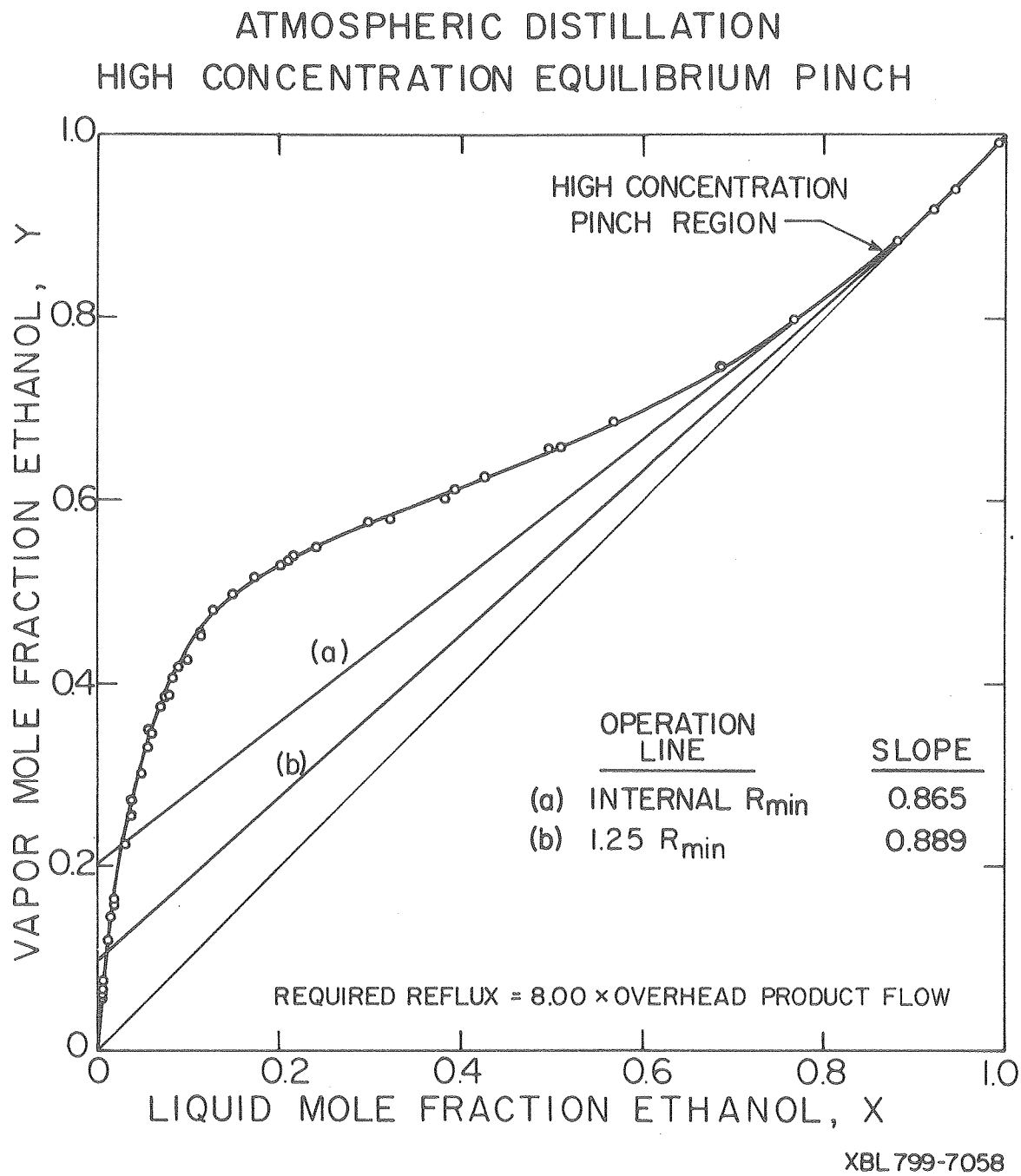
ATMOSPHERIC DISTILLATION
HIGH CONCENTRATION EQUILIBRIUM PINCH
HIGH CONCENTRATION PINCH REGION
(a)
(b)
OPERATION LINE
SLOPE
(a) INTERNAL Rmin 0.865
(b) 1.25 Rmin 0.889
REQUIRED REFLUX = 8.00 × OVERHEAD PRODUCT FLOW
VAPOR MOLE FRACTION ETHANOL, Y
LIQUID MOLE FRACTION ETHANOL, X
0
0.2
0.4
0.6
0.8
1.0
XBL 799-7058

Figure 7.

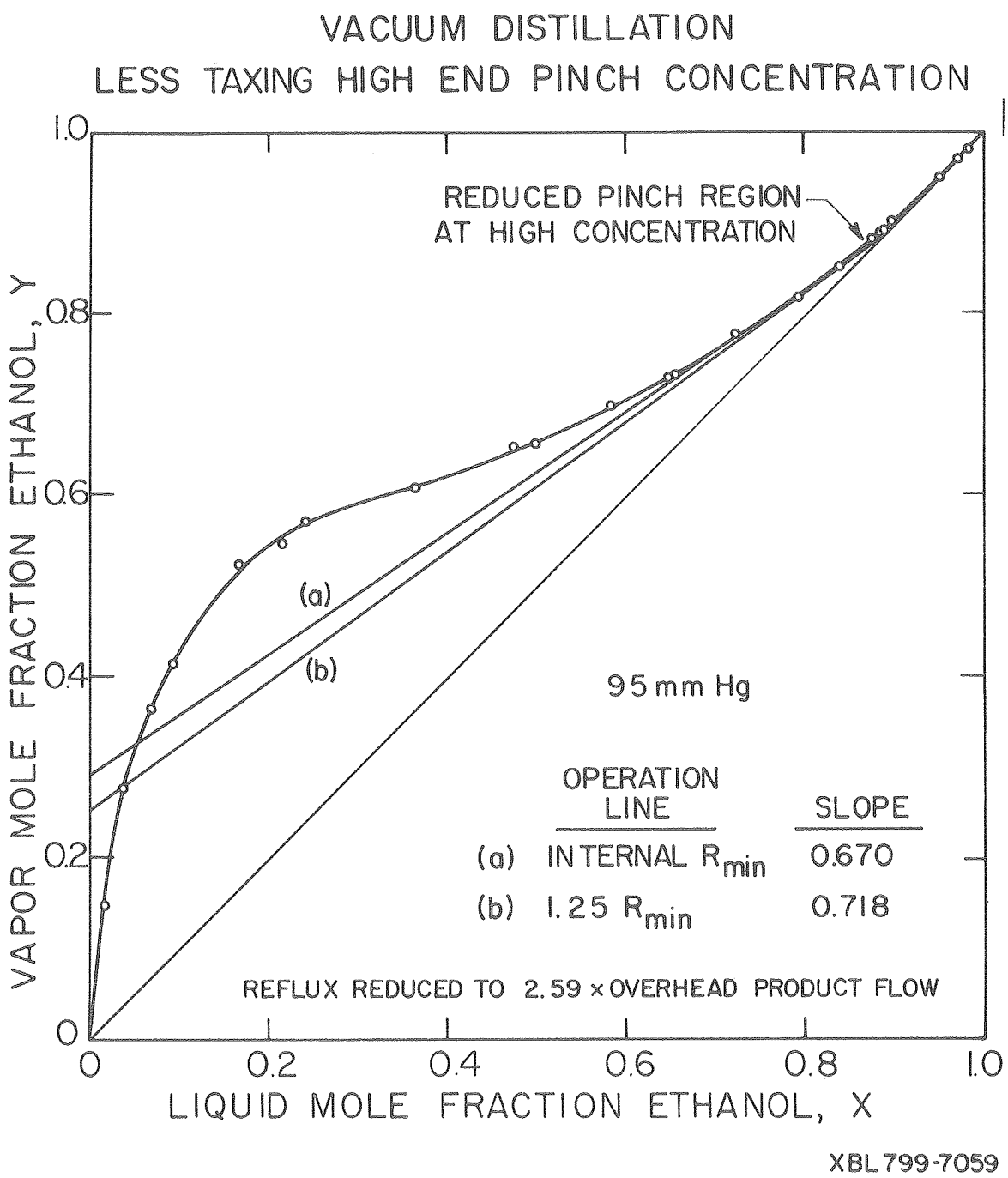
VACUUM DISTILLATION
LESS TAXING HIGH END PINCH CONCENTRATION
REDUCED PINCH REGION
AT HIGH CONCENTRATION
(a)
(b)
95 mm Hg
OPERATION LINE
SLOPE
(a) INTERNAL R_{min} 0.670
(b) 1.25 R_{min} 0.718
REFLUX REDUCED TO 2.59 × OVERHEAD PRODUCT FLOW
VAPOR MOLE FRACTION ETHANOL, Y
LIQUID MOLE FRACTION ETHANOL, X
0
0.2
0.4
0.6
0.8
1.0
XBL 799-7059

Figure 8

At low pressure, the volatility of ethanol relative to water is decreased in the low ethanol concentration region and a low concentration pinch can result. Therefore, a sieve plate column with high pressure drop per plate is used. Head pressure is maintained low (77 mmHg) to eliminate the high end pinch, but the pressure at the column foot is relatively high (195 mmHg) so that a low end pinch is avoided.

The vacuum column operation is shown in Figure 9. The three section operating line results because of the small, low concentration bleed removed from the fermenter (to prevent toxin build up) and fed near the column foot. External reflux ratio is reduced from 8.00 to only 2.59, which corresponding energy savings (Table 17). The distillation reboiler and feed preheat energies can now be met entirely with exhaust steam from the compressor drivers (Figure 10) and considerable operating cost savings result.

Capital and operating costs for the flash-ferm process combined with a vacuum distillation are summarized in Tables 18 and 19, and compared with the earlier processes in Table 20. Total cost (exclusive of feed materials) is only 23.5 ¢/gal. A reduction of 54% as compared with the traditional batch process. The overall energy requirement is reduced to 14,470 Btu/gallon, a 42% savings.

4. Conclusions

The flash-ferm process is an advance upon the earlier vacu-ferm process, offering advantages in reduced operating costs and energy consumption. When combined with a vacuum distillation, the initial ethanol concentration step provided by the flashing operation is taken advantage of, and energy requirements are reduced to very low levels.

With these improvements, the fermentation and distillation processes have been highly optimized. Further steps toward reducing fermentative ethanol cost must come from development of cheap supplies of sugar raw material.

Table 17

ETHANOL SEPARATION ENERGY REQUIREMENTS* (BTU/GALLON) 95wt%

PROCESS	COMPRESSORS	COLUMN FEED PREHEAT	COLUMN REBOILER ENERGY	TOTAL
BATCH FERMENTATION AND ATMOSPHERIC DISTILLATION	0	9.26×10^2	2.42×10^4	25.1×10^3
VACUUM FERMENTATION AND ATMOSPHERIC DISTILLATION	4.52×10^3	5.88×10^2	2.36×10^4	28.7×10^3
FLASHFERM AND ATMOSPHERIC DISTILLATION	3.85×10^3	4.52×10^2	2.38×10^4	28.1×10^3
FLASHFERM AND VACUUM DISTILLATION	3.85×10^3	3.29×10^2	8.65×10^3	12.8×10^3

*These figures do not include scavenging of 600 psia compressor exhaust steam.

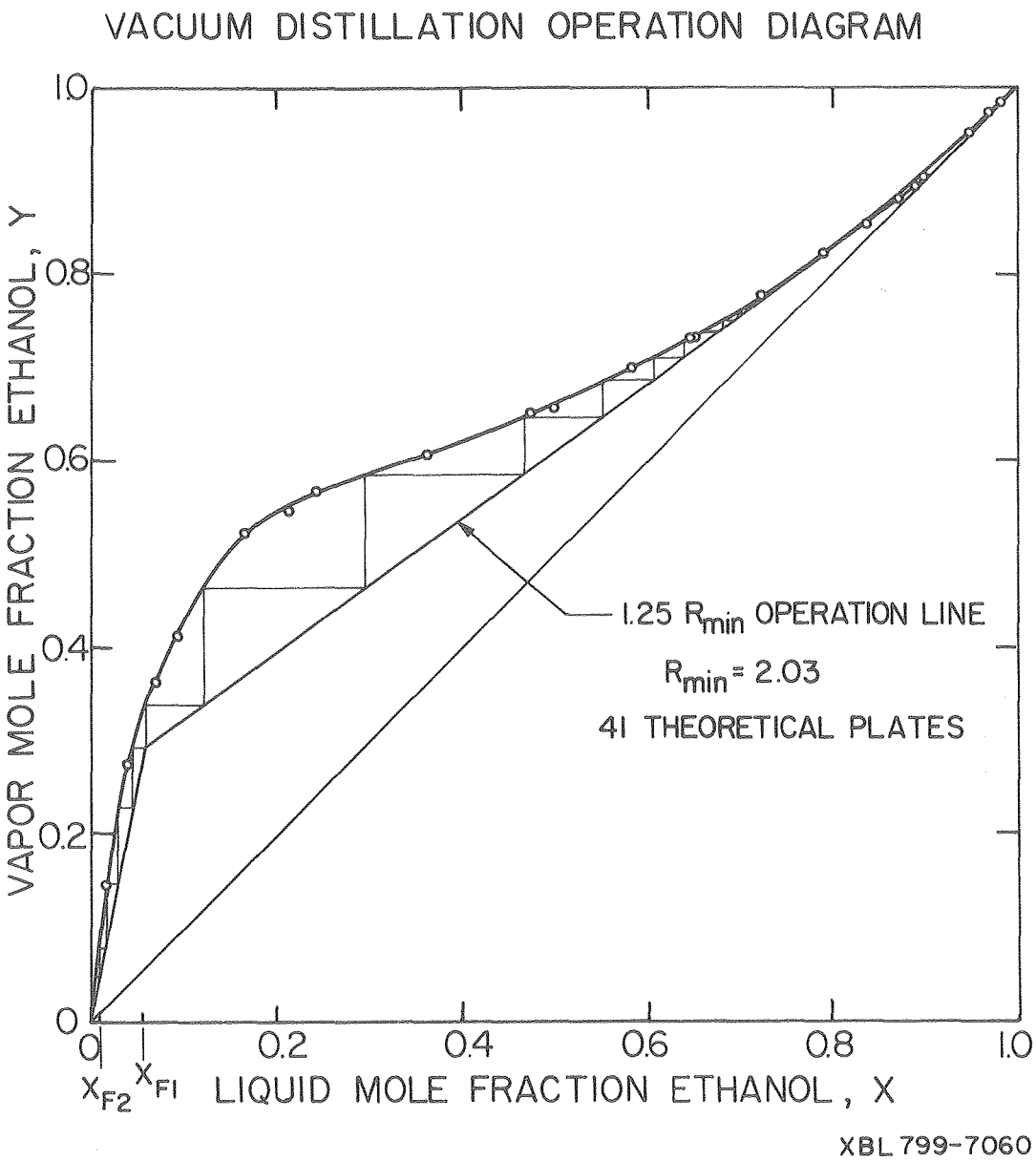
VACUUM DISTILLATION OPERATION DIAGRAM
VAPOR MOLE FRACTION ETHANOL, Y
LIQUID MOLE FRACTION ETHANOL, X
1.0
0.8
0.6
0.4
0.2
0
0.2
0.4
0.6
0.8
1.0
X_{F2}
X_{F1}
1.25 R_{min} OPERATION LINE
R_{min} = 2.03
41 THEORETICAL PLATES
XBL 799-7060

Figure 9

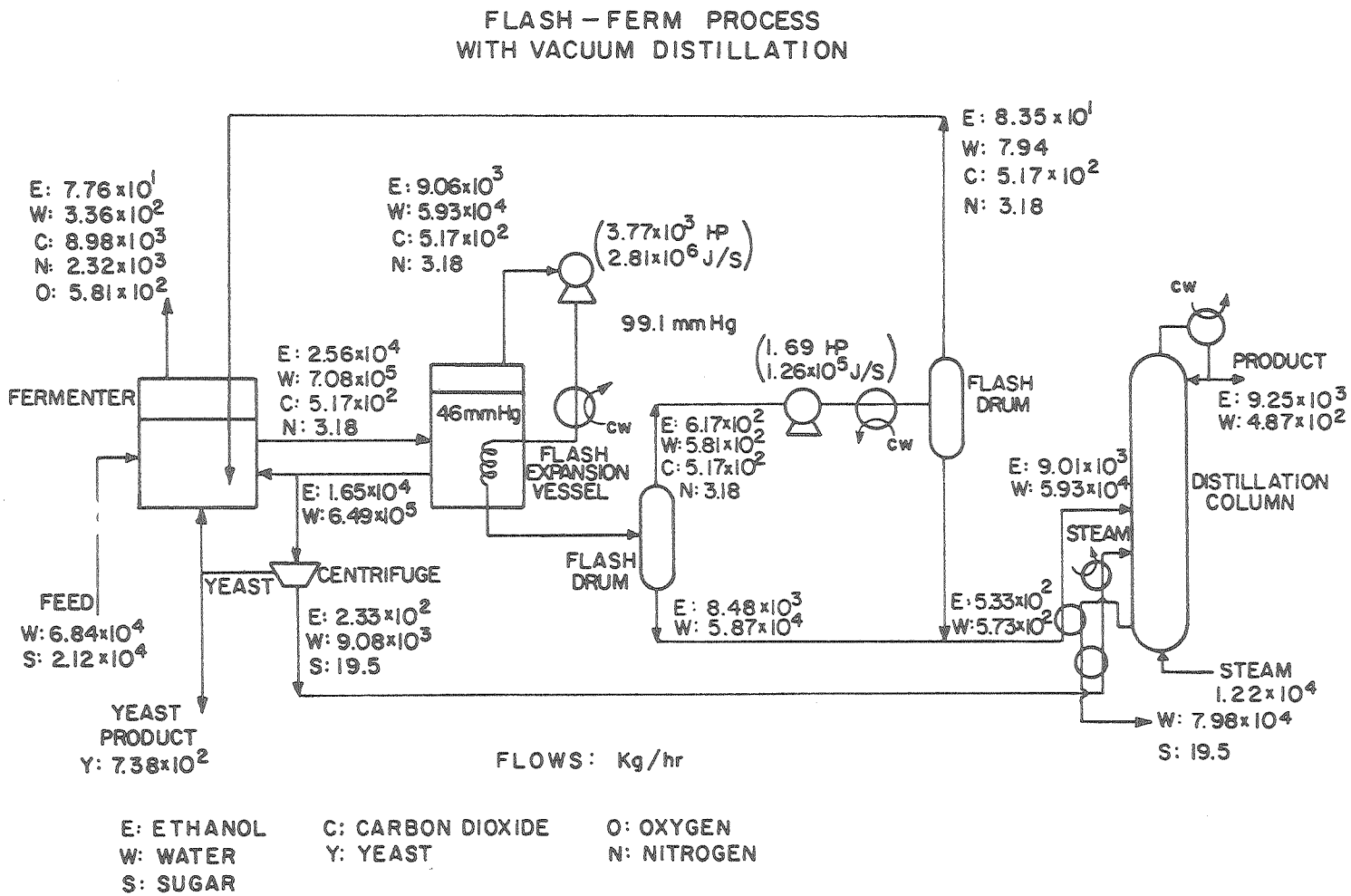
FLASH – FERM PROCESS
WITH VACUUM DISTILLATION
E: 7.76 x 10^1
W: 3.36 x 10^2
C: 8.98 x 10^3
N: 2.32 x 10^3
O: 5.81 x 10^2
E: 9.06 x 10^3
W: 5.93 x 10^4
C: 5.17 x 10^2
N: 3.18
(3.77 x 10^3 HP
2.81 x 10^6 J/S)
99.1 mm Hg
E: 8.35 x 10^1
W: 7.94
C: 5.17 x 10^2
N: 3.18
CW
PRODUCT
E: 9.25 x 10^3
W: 4.87 x 10^2
FERMENTER
E: 2.56 x 10^4
W: 7.08 x 10^5
C: 5.17 x 10^2
N: 3.18
46 mm Hg
CW
FLASH EXPANSION VESSEL
(1.69 HP
1.26 x 10^5 J/S)
CW
FLASH DRUM
E: 6.17 x 10^2
W: 5.81 x 10^2
C: 5.17 x 10^2
N: 3.18
E: 9.01 x 10^3
W: 5.93 x 10^4
DISTILLATION COLUMN
STEAM
E: 1.65 x 10^4
W: 6.49 x 10^5
FLASH DRUM
YEAST
CENTRIFUGE
FEED
W: 6.84 x 10^4
S: 2.12 x 10^4
E: 2.33 x 10^2
W: 9.08 x 10^3
S: 19.5
E: 8.48 x 10^3
W: 5.87 x 10^4
E: 5.33 x 10^2
W: 5.73 x 10^2
STEAM
1.22 x 10^4
W: 7.98 x 10^4
S: 19.5
YEAST PRODUCT
Y: 7.38 x 10^2
FLOWS: Kg/hr
E: ETHANOL
W: WATER
S: SUGAR
C: CARBON DIOXIDE
Y: YEAST
O: OXYGEN
N: NITROGEN
XBL 799-7053

Figure 10

Table 18

FLASH-FERM AND VACUUM DISTILLATION:
PURCHASED EQUIPMENT SUMMARY

STORAGE (3 weeks)		
MOLASSES		135,800
ETHANOL		147,500
YEAST		70,400
		653,700
FERMENTATION		
FERM & AGIT		173,050
MAIN COMP		492,000
2nd COMP		51,400
FLASH EXCH		514,000
FLASH POT		44,160
FLASH CIRCULATING PUMP		31,930
FLASH TRIMMER EXCH.		80,450
AIR STERILIZER		2,220
MEDIA STERILIZER		11,230
MEDIA PREHEAT EXCH		209,000
NUTR. MIX TANK		49,166
GAS LIQUID SEP.	(301 gal)	2,514
	(10 gal)	170
2nd VAP. condenser		3,350
CENTRIFUGE		120,970
YEAST DRYER		60,700
AIR COMPRESSOR		50,270
		1,896,580
ETHANOL RECOVERY		
DIST. COLUMN	11 ft diameter, 51 tray	298,000
CONDENSER	11,000 ft^2 each	80,330
F_1 PREHEAT	1,450 ft^2	145,000
F_2 EXCHANGER	15.2 ft^2	1,100
		395,930
TOTAL PURCH. EQUIP.		2,946,210

CAPITAL INVESTMENT (4.87 x TOTAL PURCH. Equip.) $14,348,000

Table 19

FLASH FERM AND VACUUM DISTILLATION OPERATING COSTS

MANUFACTURING COSTS

DIRECT COSTS--RAW MATERIALS	BASIS	VACU FLASH (VACUUM COLUMN) ¢/GAL
NUTRIENT SOLUTION	3.5¢/GAL PRODUCT	3.50
WATER	$0.80/10^3$ GAL H_2O	.06
MOLASSES (50% SUGAR)	$85./ton	122.14
OXYGEN		0.00
RAW MATERIALS SUBTOTAL		125.71
DIRECT COSTS--OTHER		
1. OPERATING LABOR	11 man days $240./man day	1.13
2. ADMINISTRATIVE	15% OP. LABOR	.17
3. UTILITIES		
POWER	4.3¢ KW.hr	.92
COOLING WATER (75°F)	$0.12/10^3$ GAL.	1.96
STEAM (45 PSIA)	$3.99/10^3$LBM	0
STEAM (600 PSIA)	$4.90/10^3$LBM	6.78
4. MAINTENANCE	6% FIXED CAP.	2.84
5. OPERATION SUPPLIES	15% MAINTENANCE	.43
6. LABORATORY	15% OP SUPPLIES	.17
PRODUCTION COST SUBTOTAL		14.53
TOTAL DIRECT COST		140.23
FIXED COST		
1. DEPRECIATION	Straight-line--10 years zero salvage	4.73
2. LOCAL TAXES	3% of FIXED CAP.	1.42
3. INSURANCE	0.7% of FIXED CAP.	.33
TOTAL FIXED COST		6.48
PLANT OVERHEAD	60% OF ALL ALL LABOR AND ADMINISTRATION	2.48
TOTAL MANUFACTURING COST		149.19
GENERAL EXPENSES		7.72
TOTAL PRODUCTION COST		156.91
GROSS INCOME: ETHANOL SALES		170.00
YEAST SALES		22.50
GROSS PROFIT		35.69
TAX (50% GROSS PROFIT)		17.84
NET PROFIT		17.84

Table 20

MANUFACTURING COST COMPARISON OF PROCESSES

	BATCH-FERM. (1 atm Column) ¢/gal	VACU-FERM (1 atm COLUMN) ¢/gal	FLASH-FERM (1 atm COLUMN) ¢/gal	FLASH-FERM (VACUUM COLUMN) ¢/gal
DIRECT COSTS:				
RAW MATERIAL	125.60	127.75	125.60	125.60
OPERATION	34.59	18.04	17.91	14.53
TOTAL DIRECT COST	160.26	145.79	143.52	140.52
FIXED COST	11.46	6.29	6.12	6.48
PLANT OVERHEAD	5.42	2.43	2.39	2.48
TOTAL MANUFACTURING COST	177.14	154.52	152.03	149.09
GENERAL EXPENSES	12.34	7.54	7.36	7.72
TOTAL PRODUCTION COST	189.68	162.05	159.39	156.81
GROSS INCOME				
ETHANOL SALES	170.00	170.00	170.00	170.00
YEAST SALES	22.50	22.50	22.50	22.50
GROSS PROFIT	2.82	30.45	33.11	35.69
TAX (50% GROSS PROFIT)	1.41	15.22	16.56	17.84
NET PROFIT	1.41	15.22	16.56	17.84
ANNUAL AFTER TAX RETURN ON INVESTMENT (PERCENT)	1.45	28.12	31.43	32.00

IV. UTILIZATION OF HEMICELLULOSE SUGARS

A. Xylose Fermentation by *B. Macerans*

This quarter's studies on conversion of xylose to ethanol involved continuous anaerobic culture of *Bacillus macerans*. Three flow rates, with 2% xylose medium, were used (20, 40 and 60% of μ_{max} equal to 0.15 hr^{-1}). The yield of ethanol was very close to the theoretical maximum, 25w% of the xylose consumed. However, the efficiency of consumption was poor at the highest flow rate--only 55% of the xylose was consumed. This poor consumption efficiency could be due to acetate inhibition. Ancillary shake flask studies with as little as 0.5% acetate added showed virtually no growth. Continuous culture studies to quantify the inhibition will be tried in the future.

Another discovery is that no lactic acid is produced. This should be viewed with great relief as the production of lactic acid is the most likely way that the yield of ethanol would be seriously reduced.

Other future studies scheduled to take place include determining the inhibitory effects of xylose, ethanol and acetone.

B. Isolation of New Xylose Fermenting Organisms and *B. macerans* Mutants

While we expect that the yields of acetone and ethanol from xylose will increase as we optimize fermentation conditions for *B. macerans*, we are pursuing two other avenues of research as well for maximizing the production of neutral volatile products from xylose. We plan to select non-acid producing mutants of *B. macerans* which should be theoretically capable of producing only acetone, ethanol, CO_2, H_2 from xylose, and we plan to isolate new organisms from nature which will ferment xylose to non-acid products.

During the last quarter we developed three specific indicator media which should allow us to perform both tasks. We are currently measuring mutagen-induced killing rates in *B. macerans* as prelude to our mutant-selection experiments which we expect to begin in the near future.

REFERENCES

1. C.R. Wilke, H.W. Blanch, "Process Development Studies on Bioconversion of Cellulose and Production of Ethanol," Progress Report, LBL-8658, 3-5 December 1978.

2. IBID. Page 19.

3. M. Riaz, C.R. Wilke, "Studies of Desorption of Cellulase from Cellulose Using Various Solvents," LBL 7889, October 1978.

4. G.R. Cysewski, C.R. Wilke, Biotechnol. and Bioeng. 20, 1427 (1978).

5. G.R. Cysewski, C.R. Wilke, Biotechnol. and Bioeng. 19, 1125 (1977).

6. A. Ramalingham, R.K. Finn, Biotechnol. and Bioeng. 19, 583 (1977).

7. C.R. Wilke, Personal Communications, Univ. of Calif. Dept. of Chemical Engineering, March 1977.

8. C.R. Wilke, "Process Development Studies on Bioconversion of Cellulose and Production of Ethanol," Progress Report, LBL 6881, 13, February 1978.

Pending Publications

Rosenberg, S.L. and Wilke, C.R., in Lignin Biodegradation: Microbiology, Chemistry and Application, T.K. Kirk, H.-m Chang, and T. Higuchi, Eds. (CRC Press, West Palm Beach, Fla., 1979. "Lignin Biodegradation and the Production of Ethyl Alcohol from Cellulose."

Castanon, M. and Wilke, C.R. Adsorption and Recovery of Cellulases During Hydrolysis of Newsprint, Submitted to Biotechnol. and Bioengineering.

Wilke, C.R., Yang, R.D., Sciamanna, A.F. and Freitas, R.F., Raw Materials Evaluation and Process Development Studies for Conversion of Biomass to Sugars and Ethnaol, submitted to Biotechnol. and Bioengineering.

Rosenberg, S.L., Patterns of Diffusibility of Lignin and Carbohydrate Degrading Systems in Wood-Rotting Fungi, LBL-9863 (in press, LBL) to be submitted to Mycologia.

Wilke, C.R., Tangnu, S.K., Multi-Stage Single Stream Continuous Production of Cellulase by Trichoderma viride QM-9414. (to be published)

Wilke, C.R., and Tangnu, S.K., Production of Xylanase by Streptomyces xylophagus nov. sp. (to be published)

Wilke, C.R. and Tangnu, S.K., Enhanced Production of β-glucosidase and Cellulase Production by Rut-C-30. (to be published)

Wilke, C.R. and Tangnu, S.K., Growth Kinetics and Cellulase Biosynthesis in the Closed System of: Trichoderma viride QM9414, Rut-C-30, Rut-L-5. (to be publised)

Wilke, C.R. and Tangnu, S.K., Effect of Environmental Control Manipulations on Cellulase Production by Rut-L-5. (to be published)

Wilke, C.R. and Tangnu, Process Development and Economic Analysis for the Enzymatic Hydrolysis of Cellulase.

Blanch, H.W.
Wilke, C.R. and Maiorella, B, Energy Requirements for the Vacu-Ferm Process (to be published in Biotechnol. and Bioeng.)

Pending Patents

Blanch, H.W, Cysewski, G.R., Maiorella, B. and Wilke, C.R. High Rate, Low Energy Consumption Fermentative Alcohol Production, IB-346.

Wilke, C.R., Sciamanna, A.F., Freitas, R., High Pressure HCl Conversion of Cellulosic Materials to Sugars. IB-361.

APPENDIX

CELLULOSE BIOCONVERSION AND PILOT PLANT STUDIES
LAWRENCE BERKELEY LABORATORY

Project Staff

Faculty Investigators

Charles R. Wilke, Professor of Chemical Engineering, Principal Investigator
Harvey W. Blanch, Associate Professor of Chemical Engineering, Co-Investigator

Postdoctoral Investigators

Steven L. Rosenberg, Bacteriology, University of California, Berkeley, Ph.D. 1970
S. Kishen Tangnu, Chemical Eng., Indian Inst. of Tech., Delhi, India, Ph.D. 1976.

Graduate Students

Thomas Delfino, Chem. Eng., Univ. of Calif., Berkeley, B.S. 1978, M.S. Candidate
George Dove, Chem. Eng., Univ. of Calif., Berkeley, B.S. 1979
Brian Maiorella, Chem. Eng., Mass. Inst. of Tech., B.S. 1978, M.S. Candidate
Dale Wiley, Chem. Eng., Univ. of Calif., Santa Barbara, M.S. 1977, Ph.D. Candidate
Harry Wong, Chem. Eng., Mass. Inst. of Tech., M.S., 1973, Ph.D. Candidate

Undergraduates

Kai-ye Fung, Dept. of Chem. Eng., Univ. of Calif., Berkeley
Thomas L. Glenchur, Dept. of Chem. Eng., Univ. of Calif., Berkeley
Julie Ma, Dept. of Chem. Engineering, Univ. of Calif., Berkeley
Wendy Lo, Dept. of Biochemistry, Univ. of Calif., Berkeley

Support Staff

Aldo Sciamanna, Chemist, M.S. Chemistry, Univ. of San Francisco, 1952
Ray Freitas, Biochemist, B.A. in Biochemistry, 1974; B.S. Chemistry, 1975
University of California, Berkeley
Bill Long, Technician
Tonya Hill, B.A. Biochemistry, Univ. of California, Berkeley, 1978

CELLULOSE BIOCONVERSION TO SUGARS AND ETHANOL

BERKELEY PROGRAM--SEPTEMBER 1979

Evaluation of Potential Raw Materials (Agricultural Residues)

(a) Analysis of composition--carbohydrates, lignin, etc.
A.F. Sciamanna, Bill Long and R.P. Freitas

(b) Hemicellulose extraction--dilute acid pretreatment
A.F. Sciamanna, Bill Long and R.P. Freitas

(c) Enzymatic hydrolysis of original and pretreated materials
A.F. Sciamanna, Bill Long and R.P. Freitas

(d) Chemical hydrolysis
A.F. Sciamanna and R.P. Freitas

Cellulase Production

(a) Multistage fermentation with *Trichoderma viride*
S.K. Tangnu

(b) Comparative Evaluation of *T. viride* mutants and alternative organisms
S.K. Tangnu

Hydrolysis Kinetics (*T. viride* cellulase)

(a) Kinetic model for product inhibition multi-source mixed enzyme systems
D. Wiley

Enzyme Adsorption-Desorption

(a) Adsorption of C_1, C_x and β-glucosidase on cellulose
G. Dove

(b) Enzyme fractionation by adsorption on cellulose
D. Wiley

(c) Enzyme desorption--effect of additives
G. Dove

Mixed or Supplementary Enzyme System Development

(a) Multi-source mixed enzyme systems
D. Wiley

(b) Xylanase from *Streptomyces xylophagus*
S.K. Tangnu

Berkeley Program--September 1979

Enzymatic and Microbial Delignification

(a) Study of *Phanarochaete chrysosporium*
S. Rosenberg

Cellulose and Glucose Fermentation to Ethanol

(a) Vacuum and cell recycle system development
B. Maiorella

(b) Media optimization
H. Wong

Xylose Fermentation to Ethanol

(a) *Fusarium oxysporum* (f. sp. lini) (NSF Project)
T. Delfino and S. Rosenberg

(b) *Bacillus macerans*
T. Delfino and S. Rosenberg

U.S.GPO:1980-698-169/F-120

This report was done with support from the Department of Energy. Any conclusions or opinions expressed in this report represent solely those of the author(s) and not necessarily those of The Regents of the University of California, the Lawrence Berkeley Laboratory or the Department of Energy.

Reference to a company or product name does not imply approval or recommendation of the product by the University of California or the U.S. Department of Energy to the exclusion of others that may be suitable.

TECHNICAL INFORMATION DEPARTMENT
LAWRENCE BERKELEY LABORATORY
UNIVERSITY OF CALIFORNIA
BERKELEY, CALIFORNIA 94720