LBNL-39163
UC-600

ERNEST ORLANDO LAWRENCE BERKELEY NATIONAL LABORATORY

Investigation of Network-Based Information System Model

A.M. Konrad, M. Perez, J. Rivera, Y. Rodriguez,
M.J. Durst, D.W. Merrill, and H.H. Holmes
Information and Computing Sciences Division

September 1996

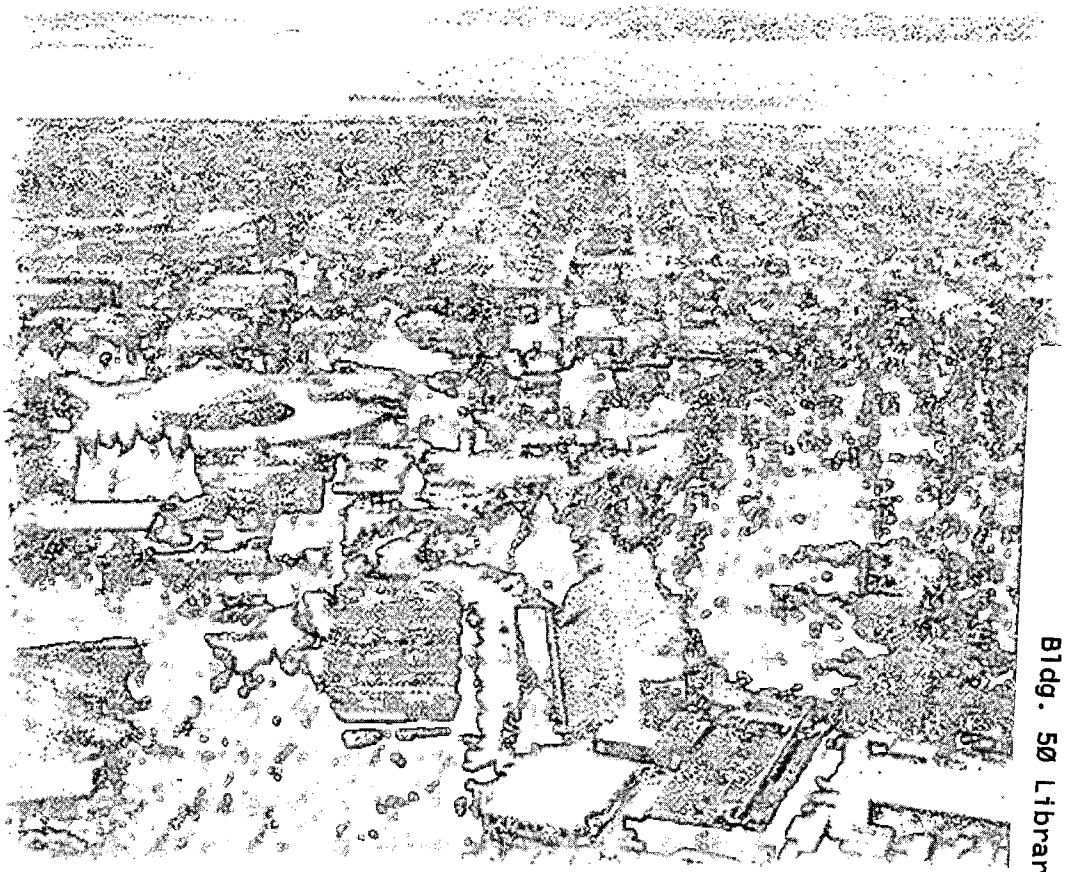

REFERENCE COPY
Does Not
Circulate
Bldg. 50 Library.
LBNL-39163
Copy 1

LBNL-39163
UC-600

Investigation of Network-Based Information System Model

A.M. Konrad, M. Perez, J. Rivera, Y. Rodriguez,
M.J. Durst, D.W. Merrill, and H.H. Holmes

Information and Computing Sciences Division
Ernest Orlando Lawrence Berkeley National Laboratory
University of California
Berkeley, California 94720

September 1996

This work was supported by the Assistant Secretary for Environment, Safety and Health, of the U.S. Department of Energy under Contract No. DE-AC03-76SF00098.

DISCLAIMER

This document was prepared as an account of work sponsored by the United States Government. While this document is believed to contain correct information, neither the United States Government nor any agency thereof, nor the Regents of the University of California, nor any of their employees, makes any warranty, express or implied, or assumes any legal responsibility for the accuracy, completeness, or usefulness of any information, apparatus, product, or process disclosed, or represents that its use would not infringe privately owned rights. Reference herein to any specific commercial product, process, or service by its trade name, trademark, manufacturer, or otherwise, does not necessarily constitute or imply its endorsement, recommendation, or favoring by the United States Government or any agency thereof, or the Regents of the University of California. The views and opinions of authors expressed herein do not necessarily state or reflect those of the United States Government or any agency thereof or the Regents of the University of California.

Table of Contents

Acknowledgments
Abstract

1.	Statement of problem	1
2.	Approach	2
3.	Architectural Issues	3
4.	System evaluation	10
5.	Prototype Implementation	14
6.	Results	16
7.	Significance of this Work	17
8.	Possible Future Work	18
9.	Summary of Deliverables	19

APPENDIX A	DBMS Evaluation Criteria, detail
APPENDIX B	Products and Systems Evaluated
APPENDIX C	Table of Evaluations (interim)
APPENDIX D	Selected Screens from WWW Access to CEDR Structured Documentation
APPENDIX E	Selected Screens from WWW Access to Epidemiology Guides (site archive records)

Acknowledgments

This project was supported by the LBNL Center for Science and Engineering Education (CSEE). We acknowledge the support of Laurel Egenberger and Nancy Salee of CSEE. We acknowledge the support of Barbara Brooks, Heather Stockwell, and Patrick Heinig with the office of the Assistant Secretary for Environment, Safety and Health in the U.S. Department of Energy, Environment and Health and Safety, who provide support for the CEDR Information System at LBNL. Guidance from colleagues at SLAC and LBNL was essential in concluding a successful Summer Research Program. We thank Louise Addis, George Crane, Dick Guertin (Stanford/RLIN), Pat Kreitz, and John Halperin, for their support from SLAC and Stanford, and John McCarthy and Mark Dedlow from Berkeley.

Abstract

The objective of the DOE-LBNL summer student research program in computer and information sciences focused on investigating database-based http-based information architectures, and implementation of a prototype using DOE's Comprehensive Epidemiologic Data Resource (CEDR) metadata or Epidemiology Guide content. We were successful in identifying the components of such an information system, an appropriate configuration given the requirements, and in implementing a prototype. This work comprised investigation of various information system architectures or variants, evaluation and selection of various tools, products, and packages, preparation of databases, database content, output formats, and graphical (World Wide Web-compatible) interfaces. We successfully prepared and demonstrated network access to content from both the CEDR structured documentation and from the DOE Epidemiology Guides (site archive records).

1. Statement of problem

The Information Problem, how to connect people with information, is complex, in part because there are many types of obstacles and intermediaries to mitigate those obstacles. The widespread use of network-based database technologies, including the internet, the world wide web (WWW), browsers, and server-to-database interfaces (Common Gateway Interfaces, CGI) have solved a number of access problems which confront the information seeker, while requiring information system designers to become familiar with a continuous stream of new architectures, tools, and methods.

During the course of this summer, Madel Perez, Yamilet Rodriguez and Jose Rivera worked under the supervision of Allan Konrad and Mark Durst with the Comprehensive Epidemiologic Data Resource (CEDR) program to investigate new information system architectures for CEDR. CEDR is a Department Of Energy (DOE) program to disseminate by various means, including electronic, access to research results and data from DOE-related epidemiologic studies during the last 30 years.

The tasks for this Summer Research Program were to develop a set of criteria for WWW-based access to the CEDR structured documentation (metadata) database, then an architecture, then determine what components were required, and of those, which could be obtained externally and which had to be developed *ab initio*. First it was necessary to evaluate a group of WWW-capable database management systems (DBMS) and select one. The time to finish all tasks for this Summer Research Program was 10 weeks.

2. Approach

The following was the work plan provided to the student research assistants at the beginning of the program.

Week 1 Review of internetworking. Browsers. Review HTML command language via Yahoo.
Search Engines. Review homepage. Scan course pages.

Tasks: Individual homepage edited and mounted.

Week 2 The Research Problem: Develop model of components and functional requirements for Webware. Understand data flows. Review of information retrieval (IR) functionality. CGI tools. DBMS. email servers.

Tasks: Survey candidate packages.
Presentation of plan and approach. Identify bibliographic materials as needed.

Week 3 Analysis and selection. Analysis and selection of packages and products for functionality and interoperability. Selection criteria.
Possible Applications:
- Webware I (web-based groupware- email in, http in, email out, http out).
- Webware II (CEDR metadata)
- Webware III (web-based listserv archive)
- Webware IV (CEDR catalog)
- Webware V (instructional modules)
- Webware VI (Epidemiologic Guides)

Tasks: Status report. Selection of component specialization by each student.

Week 4 Begin Implementation: Procurement and installation

Week 5 System Installation.

Week 6 Application implementation.

Week 7 Load demonstration data (Webware II).

Week 8 Demonstration.

Week 9 Write project reports.

Week 10 Wrap up, Poster Sessions.

3. Architectural Issues

At the beginning of the project, we envisaged an architecture consisting of a web server (httpd), a database management system (DBMS) with several CEDR databases, and one or more Common Gateway Interface (CGI) scripts to convey data between the httpd and DBMS and further transform the data as needed in each direction. We anticipated as a major subtask of the summer project, writing these CGI scripts ourselves, using the PERL language.

Early into the project, we learned from LBNL colleagues and other sources, that this "home brew" approach to CGI scripts was only the first step in an evolution. The *CGI Evolution, Phase I* below indicates the originally anticipated configuration.

3.1 CGI Evolution, Phase I

By the "home brew" approach, we mean:

the hand-crafting of a CGI script specifically for the target database, i.e., with specific business logic regarding data base name, database elements, and searchable indices;

and where the systemic operation is:

request by client of a graphical interface form from server for specification of inquiry specifications;

generation of GET/POST requests to be sent to httpd from client;

requests received from client by httpd translated into CGI variables or *stdin*;

requests received by CGI script as variables or *stdin*, reformatted by the CGI script as legal DBMS commands;

requests received by the DBMS, processed against the database, results generated by the database, and then returned to CGI script;

results received by CGI script, translated, with substantial business logic encoding, into HTML, and forwarded to the httpd;

httpd conveys html using http to client browser.

A block diagram, figure 1, illustrates this architecture, comprised of the following:

Client:
- C1 Platform (hardware, OS, network connectivity)
- C2 Browser (http-capable if not multi-protocol)

Network:
- N1 Network

Server:
- S1 Platform (hardware, OS, network connectivity)
- S2 HTTP Daemon
  - S3 Page containing a Link (optional, but likely) to search form
  - S4 Form Page
  - S5 CGI script
- S6 DBMS
  - S7 HLI/means of send/receive data to other processes (If on same machine*)

*I.e., if S6 is on a different network address (i.e., different machine) than S5, then S7 becomes a network server, to mitigate the network boundary, and listens at a (well known) port, and binds an incoming socket to the port to support a specific client process.

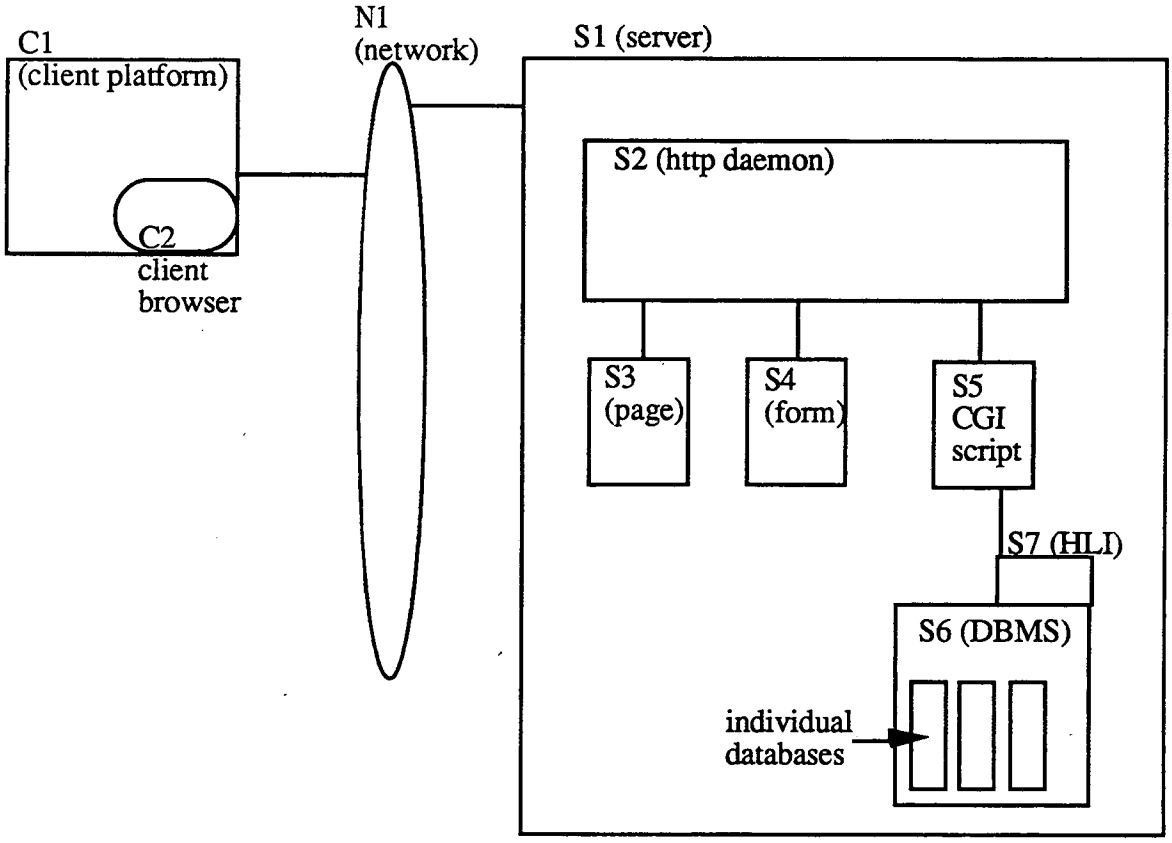

Figure 1

The components provide the following services:

C1 human interface service and network connectivity
C2 http communications capability, HTML rendering capability, 'helper' applications

N1 TCP/IP

S1 All of: HTTPD service,
DBMS service, and
network connectivity

S2 Send and Receive http commands (as/from HTML documents) to/from Client, translate commands, and send to/from CGI Script

S3 Store HTML text and URL pointing to a forms page

S4 Provide forms capabilities (fields, radio buttons, etc.) to specify a search or browse, and return values to HTTPD

S5 Both:
Receives forms input, translates into DBMS-acceptable languages, conveys to DBMS;
Receives DBMS response, performs HTML markup, conveys to Client Browser (C2) via S2.

Note: S5 might run on a machine with a different network address than httpd (S2) and thus be supported as a CGI program encapsulated in a network server, listening for connection requests, queuing, etc.

S6 DBMS capability (organized repository, indexing, input, output/report generator, query processing)

S7 Interoperability with DBMS by process other than a terminal, .e.g, a CGI script
DBMS same machine as CGI: Host Language Interface
DBMS different machine as CGI: server listening at a port

How Capability is Provided (Interoperability):

Pertinent interoperations are:

C2-S2	http, ftp, gopher, etc.		
S2-S3	HTML, etc.		
S2-S4	GET (constructs a URL)		
	POST (constructs MIME object)		
S2-S5 (S4-S5)	CGI recognition defined for httpd functionality		
	To CGI:	GET/URL stores variables in memory accessible to CGI	
		POST/MIME sends to CGI via *stdin*	
	From CGI:	*stdout*	
S5-S6/S7	To DBMS:	Same Machine: HLI.	
		Different Machine: network server	
	From DBMS:	Same Machine: HLI.	
		Different Machine: network server	

Does Application Developer Provide the Component?

C1	No, User
C2	No, User
N1	No, System
S1	No, System
S2	No, System
S3	Yes, we develop
S4	Yes, we develop
S5	Yes, we develop
S6	No, Vendor
S7	No, Vendor

3.2 CGI Evolution, Phase II

The essence of this phase is that laborious hand-crafting of CGI middleware to provide the services for S5 *supra* is virtually eliminated by redistributing the functionality of S5 (CGI script) as follows:

S5 still receives requests from httpd and passes to DBMS, and receives requests from DBMS and returns to CGI

However, most translation tasks and other database-specific tasks, e.g., translating forms/CGI requests into DBMS requests, and translating DBMS responses into HTML objects, are no longer performed by the CGI, but are partitioned to either the httpd, in the case of translating forms requests into dbms-legal commands), or assigned to the DBMS itself (generating HTML-ready output).

This implies that the httpd "knows" the syntax of DBMS-legal requests. This is accomplished by 'built-in' recognition of translations between forms specifications and legal DBMS command language, and facilitated by using a configuration file which is consulted by the httpd where application-specific attributes are specified.

Indeed, major database vendors are bringing to market their own httpd servers which provide these translation services without need for individual coding of CGI scripts. The CGI functionality of conveying requests in each direction is reduced to a generic capability that can be coded and compiled by the httpd/DBMS vendor as simply another module.

A Phase II block diagram (figure 2) illustrates this modified architecture. This model comprises additional components:

S8 config files containing application-specific information such as name of database, user, passwords, preference for error processing, logging, format names, other specifications as required.

S9 Stored procedure call processor accepts requests from httpd as configured according to individual config file specifications and transmitted by the CGI, and submits the query to the specified database and returns the result. This processor might be recognized to the DBMS as simply another (logged on) user , or process (if using S7 host language interface).

The benefits are:

1. The labor required to implement a forms-based www-based dbms application is greatly reduced.
2. The functionality remaining in the CGI requires no user-specific or application-specific information and can be treated as simply a compiled module that runs regardless of the database requested.

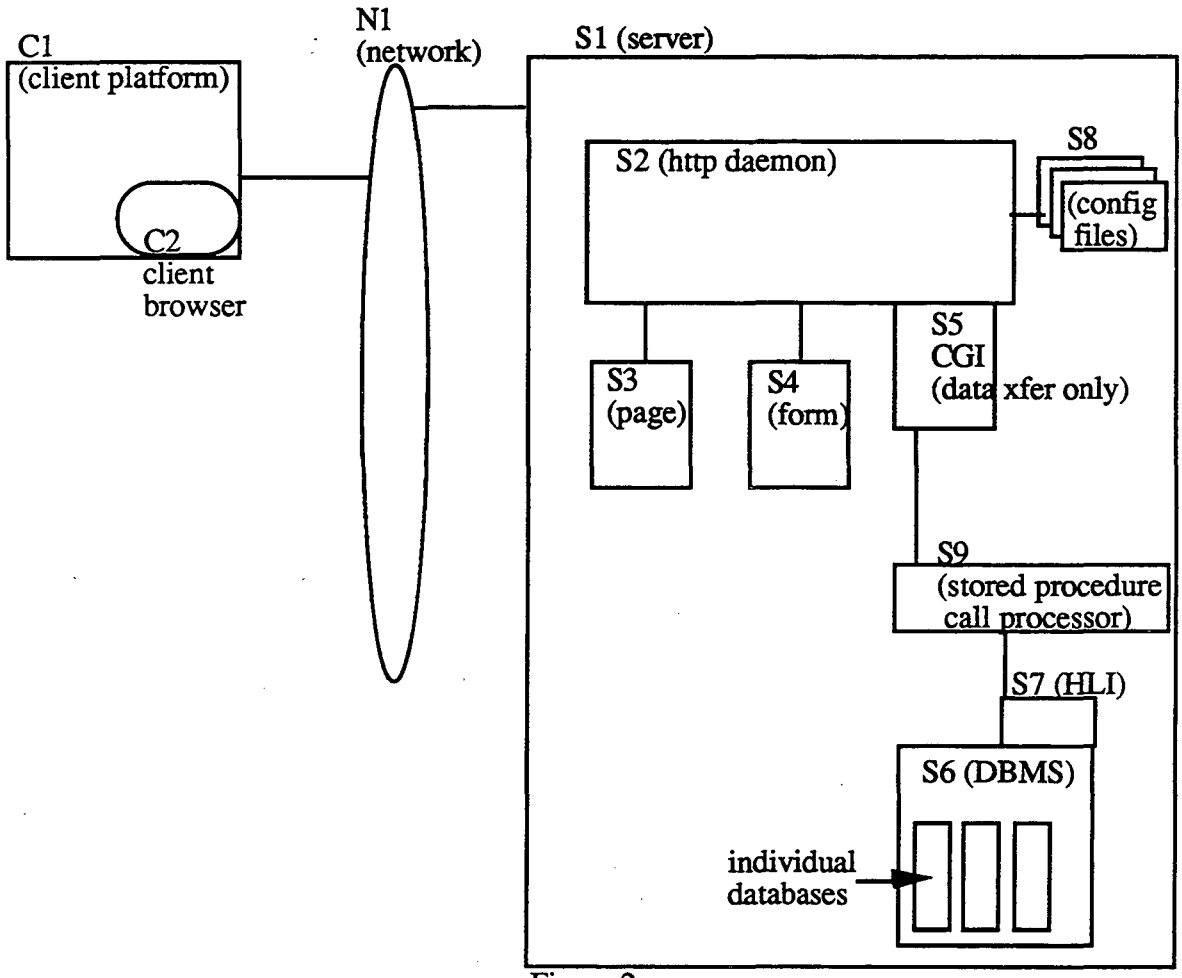
C1
(client platform)
C2
client
browser
N1
(network)
S1 (server)
S2 (http daemon)
S8
(config
files)
S3
(page)
S4
(form)
S5
CGI
(data xfer only)
S9
(stored procedure
call processor)
S7 (HLI)
S6 (DBMS)
individual
databases

Figure 2

3.3 CGI Evolution, Phase III

This phase builds upon the benefit of Phase II by establishing connectivity between S2 (httpd) and S6 (DBMS) such that each successive DBMS request does not require reinitialization of the connection between S2 and S6, and accompanying generation of an image of database access modules. Where architecture of both S2 and S6 is under the control of one party, e.g., a database vendor, this connection can be established through efficient, if proprietary, means.

The primary benefit of Phase III is enhanced performance where the overhead of establishing a connection to a database or an image of a database access module in memory is substantial or where there is a high volume of requests as a multiplier of the overhead.

3.4 Relationship to Summer Research Project

In Section 4 below, is described our evaluation of various tools and systems considered for our information system architecture. During the course of our investigation, we determined:

A significant training investment is required in developing PERL expertise;

A significant coding investment is required in developing CGI scripts by hand

We have access to "Phase II" and "Phase III" DBMS obviating the need to take a "Phase I" approach.

As the system evaluation below indicates, we did identify a set of Phase III tools that were within our scope for (the relatively short 10-week) summer research project and purchasing constraints (time and dollars).

4. System and product evaluation

The objective of the product and system evaluation effort was to identify tools with sufficient 'built-in' WWW accessibility that the overall work of implementing WWW access to CEDR databases would be minimized. Initially, we evaluated:

S5 (CGI script) tools

S6 Database Management Systems

Evaluation of S5 (CGI script) tools.

As explained *supra*, we learned during the course of our investigation that a Phase I approach might not be the most desirable, and that at least a Phase II approach was possible within the context of the Summer Research Program. Consequently, our initial effort devoted to developing both PERL and CGI expertise, while useful from a breadth-of-discipline standpoint, was abandoned in favor of a Phase II/III approach.

Evaluation of S6 Database Management Systems:

We understand *database management system* to comprise:

1. An **organized repository** of goal records stored "in" the DBMS according to a definition or schema also "in" the DBMS
2. An **indexing engine**, which builds indices of various kinds (word, phrase, date, personal name, etc.) from goal records newly added to (1) the organized repository; modifies index entries appropriately when goal records are modified; and deletes index entries when goal records are deleted from the organized repository.
3. A **search engine** which receives queries, processes them against index records to obtain search results (a set of pointers to goal records selected), and then uses those pointers to provide the count of the records satisfying the search result.
4. A **report generator** which uses search result sets or direct (e.g., display or sequential processing) commands to fetch specified goal records and then present them in a specified format either to a specified file, to a terminal, or to another program, such as a CGI program, for further processing or transmission to another program means.
5. Support for text/character manipulation capabilities (please see Appendix).
6. Support for concurrent update control.
7. Support for optionally-occurring elements.
8. Support for dates
9. Support for pre-defined procedures (on records upon input to organized repository, on records upon output from dbms, on goal records as passed to index records, on query values as processed against index records)
10. Support for personal name processing.
11. Support for variable length elements.
12. Support for web/http (CGI) interoperation (Phase II or Phase III)

Systems were identified as candidates, and then evaluated against the above twelve criteria.

Candidate systems were identified from a variety of sources, including:

a) WWW
   1) Free Databases list from Yahoo/Database page
   2) Non Free Databases - company homepages
b) FTP sites
c) Information from LBNL colleagues
d) Information from external colleagues

From these sources, a preliminary list of candidate systems was developed (please see Appendix B).

Evaluation was performed on each candidate system initially only to determine whether the first four criteria were met by the candidate system. This resulted in a narrower list of finalists for which further evaluation was performed using criteria 5 - 12.

Evaluation on any candidate system was done by whatever means were available to us within the constraints of our Summer Research Program. We did not invite any vendor for a presentation. We began evaluation of nearly every candidate with information from the vendor or distributor's web pages, ftp sites, or other information we were able to obtain. We utilized:

1) Telephone
2) E-mail
3) Fax
4) Regular Mail
5) Web sites
4) FTP sites

Results of Evaluation.

Twenty two (22) systems received preliminary evaluation. Of these:

Seven (7) were "web search engines only". That is, they did not support goal records in an organized repository of their own, but used agents to scan the web, fetch documents, and build word indices. These were considered unsuitable because, without an organized repository and a record structure under CEDR's control, we could not control the format of output, or even generate reformatted output at all. These were:

1) Glimpse 3.0
2) lq-text
3) FFW- Free text for WWW
4) MG Information Retrieval System
5) qt (Query Text)
6) Topic Internet Server
7) WAIS

Four (4) were non-responsive. In this category, we include those for which no telephone number or network address was found for obtaining further information, or for which the distributor indicated there was 'no support available' for the product, or where repeated telephone inquiries were not returned, or where our inquiries were answered with "the only documentation we have comes with our system - get our system and install it, and then you can read the documentation". These included:

1) Postgres 95
2) MORE- Multimedia Oriented Repository Environment
3) System II
4) SMART

More detailed evaluation was performed upon the eleven (11) remaining systems, with the following results:

There were several products which did not meet functional requirements related to bibliographic-type applications (criteria 5-11):

1) RDB
2) ORACLE (base product)
3) Sybase (base product)

Sybase and ORACLE both recommended use of separate ancillary products to meet the bibliographic/textual requirements. We read these recommendation to mean that the core DBMS offerings themselves were not adequate to meet our requirements in the judgement of the vendors. One of these ancillaries was a third-party product, one was a product offering of the primary DBMS manufacturer. Although the combination of these DBMS products and their application add-ons might have met our functional requirements, we discontinued further evaluation because the investments required, both in licensing and in staff training time, were beyond the scope of our Summer Research Program. If an evaluation process less constrained by time and other resources becomes possible, these two, Oracle with Context, and Sybase with Fulcrum, might be given further consideration.

There was a class of products which can be described as WWW-DBMS middleware. Although these did not meet our DBMS evaluation criteria, they could provide an interesting alternative approach in a less constraining evaluation program. We encountered one such product (although we encountered mention of a small number of others):

1) ESQL/Seekersoft

One system was not evaluated because we determined that it was still in *beta* stage on the basis of postings to a listserv established for users and beta testers. However, a future evaluation should include this system:

1) ISITE/ISEARCH from Center for Networked Information Discovery and Retrieval (CNIDR)

The remaining six (6) appeared to be finalist candidates:

1) SPIRES
2) AIRS II
3) BRS/Search
4) Microsoft Access
5) Basis Plus
6) Fulcrum Search Server

Each of these systems or products deserve full evaluation in the context of a conventional evaluation process.

By this point in our Summer Research Program, having identified these six from a field of twenty-two, we were confronted with the pressure of selecting and installing a product, loading CEDR data, and developing WWW interface forms, all within about six (6) weeks and with negligible funding or time resources to conduct any sort of convention procurement.

At this juncture, we received indications form a sister DOE laboratory, the Stanford Linear Accelerator Center (SLAC) near Palo Alto, of interest in inviting our Summer Research Project to use one of the six finalists candidates, SPIRES, using their computing resources, at no cost and with no procurement burden. Further, this alternative offered a Phase III approach, thus mitigating resource-intensive CGI development, a comparable computing platform to CEDR's (SunOS 4.1.3), and favorable licensing terms if migration to an LBNL platform were desired. Interestingly, SPIRES provides this Phase III capability, the performance enhancement of optimized reinitialization, *without* a proprietary httpd, but by instantiating the initialization functionality in S9 rather than in S2.

SPIRES, developed with DOE funding and the foundation for a large (DOE ER/SLAC/CERN/DESY/Japan) high energy physics bibliographic database, is recognized by portions of DOE (ER) as an appropriate tool for this type of application.

Finally, this alternative had the advantage that a project staff member had sufficient prior working knowledge of the system that there was a high probability that we could define CEDR databases, load CEDR data, and develop WWW interfaces within the tight time constraints. Additionally, we had established a good working relationship with SLAC staff over the past two decades which augured for good technical support when needed by the Summer Research Project staff.

SLAC's motivation for this offer was consistent with other cooperative work between SLAC and LBNL in the past: mutual benefit. SLAC was interested in our experience with developing WWW-based applications in SPIRES which they might use to improve the transition of their mainframe-based SPIRES high energy physics databases to a unix-based www-based environment.

Consequently, SPIRES was chosen from the six finalist candidate systems with which to implement our prototype system for the Summer Research Project.

5. Prototype Implementation

The prototype information system implemented in the Summer Research Project was a Phase III type information system as described above.

Three variations to the Phase III model are used in the WWW-based SPIRES system:

First, noted supra, the performance enhancement of optimized reinitialization is achieved *without* a proprietary httpd by instantiating the initialization functionality in S9 (stored procedure processor) rather than in S2 (httpd) or S5 (CGI).

Second, use of a proprietary httpd is further avoided by provision of a proprietary module which provides forms-DBMS request translation unique to SPIRES. This appears in figure 3 as component S10, DBMS-forms Interface.

Third, the network address of the httpd server (S2) and the network address of the machine running the CGI script (S5) are different, i.e., they are different machines. Consequently, the CGI function is encapsulated in a server (S5) which listens in the standard way for requests from S2, otherwise behaving as an ordinary Phase II CGI component (passing requests only), although some additional security features have been implemented in this CGI server.

The following table indicates the names used in the CEDR WWW-based SPIRES information system for each of the generic components:

Component	Generic Name	CEDR-WWW-SPIRES
S1	Platform	SunOS Release 4.1.3_U1 (SERVER-4M) (all versions of unix believed to be supportable)
S2	HTTP Daemon	Version 3.0pre5 of the CERN server code is running on www.slac.stanford.edu (the Unix production server).
S3	Page containing link to search form	not public at present
S4	Form Page	http://www.slac.stanford.edu/~lbl5spi/formcedr.html http://www.slac.stanford.edu/~lbl5spi/formepi.html
S5	CGI function (Phase II type)	encapsulated in John Halperin CGI-SPIRES server ~jxh/pgms/spires/jrunsrvr.csh (netcall.pl) (interpreted rather than compiled at present)
S6	DBMS	SPIRES, uSPIRES (unix)
S8	config files	stored in: /afs/slac.stanford.edu/www/spires/find/ cedrdfs cedrfile cedrvars cedrcode When spiface receives the request from a form, then it consults the options files for that database, reforms the command to be a 'qspires' command and sends it on to Halperin's server.

S9	Stored procedure call processor	quSPIRES (a version of qSPIRES for unix)
S10	DBMS-Forms interface	SPIFACE v. 2.0

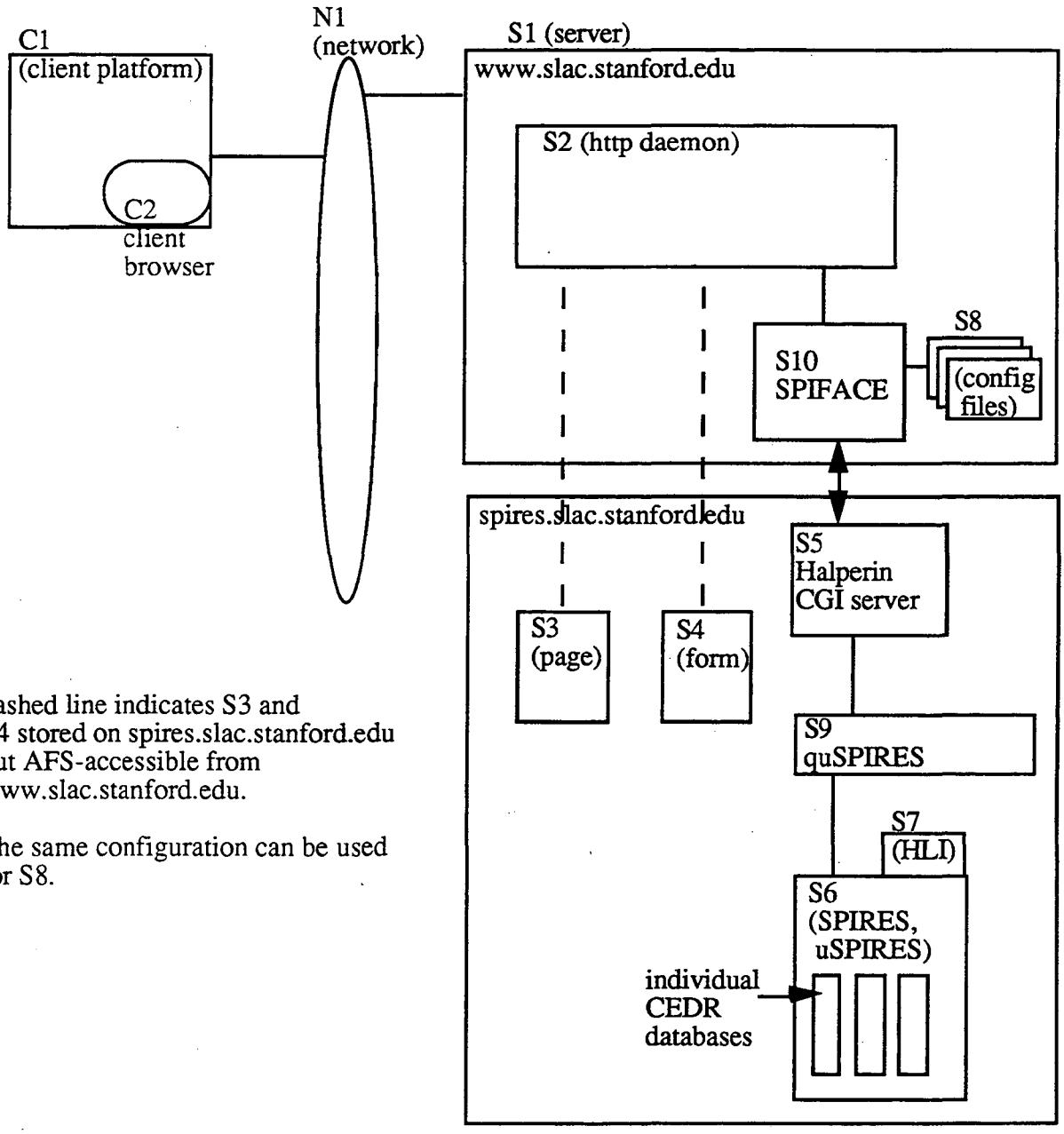

dashed line indicates S3 and S4 stored on spires.slac.stanford.edu but AFS-accessible from www.slac.stanford.edu.

The same configuration can be used for S8.

Figure 3

6. Results

1. We defined a file definition (schema) for the Epidemiology Guides comprising two 'databases':

   Epiguides
   EpiDE (the 'data elements' defined by HAI - a lookup table)

2. We converted three of the eight Epi Guides for loading, and loaded.

3. We developed prototype output formats, including for web presentation.

4. We implemented www-accessible forms for access to the Epidemiology Guides, for browsing, and for searching.

   http://www.slac.stanford.edu/~lbl5spi/formepi.html

5. We defined a file definition (schema) for the CEDR metadata comprising five 'databases':

   CEDRDFS (Data file set level metadata)
   CEDRFILE (File level metadata)
   CEDRVARS (Variable level metadata)
   CEDRCODE (Codes metadata)
   CEDRICD (Death Summaries)

6. We developed conversion routines to convert each type of metadata from CEDR dump format into database load format. This was problematic owing to the inconsistency of CEDR data and some of the CEDR dumping routines, and other eccentricities inherent in the current CEDR.

7. We converted all CEDR metadata resident in cedr.lbl.gov/data/cedrprod as of mid-July.

8. We loaded all the CEDR metadata and ICD summaries into their respective databases.

9. We established output formats for each metadata database, including for www access.

10. We established configuration files and www-accessible forms for access to all five databases.

    http://www.slac.stanford.edu/~lbl5spi/formcedr.html

11. We itemized a number of aspects of CEDR data deserving of QA/QC attention.

12. We characterized potential future work (Section 8).

7. Significance of this Work

All network access to CEDR material previously was to stored "flat files" each of which had to be separately maintained.

With this prototype, interaction with CEDR structured documentation is directly to the authoritative data in the database, giving these benefits:

1. The laborious load-dump-filter/overflow file procedure can eventually be abandoned.
2. Updated CEDR information is now accessible instantly- when the dbms record is updated, it is available on the on the web at that moment.
3. Multiple output formats all operate on single source - when CEDR metadata is updated, it can be instantly accessible in www format, CEDRtext format, and in phototypesetter format.
4. The HyperCEDRtext concept is now obsolete.

8. Possible Future Work

Transforming the Summer Research Project prototype to a production CEDR information system might require at least:

1. Additional output formats to generate CEDRtext files.

2. Development of a protocol to enable publish-on-demand CEDR catalogs.

   An important aspect of this work is that a CEDR staff member can update a metadata record, and the update is *immediately available*, and could be used to print a catalog rapidly. Such on-demand catalog printing might be triggered by receipt of email with a valid postal address.

3. Development of a CEDRtext applet:

   Currently, the only functional benefit of CEDRtext over www access is that CEDRtext only sends to the user/terminal that portion of the numerical data (i.e., data, not metadata) that fits in a small (15x80) window. Were the CEDR data files to be simply accessed as HTML, the larger CEDR files would exceed the capacity of the net and the client's browser.

   However, a Java-like applet might be developed with this portion of CEDRtext functionality, and would work as follows:

   - Information Seeker opens CEDR homepage
   - (registered) Information Seeker clicks on link to CEDR data
   - A CEDR applet is conveyed from server to client's browser
   -The applet provides a window with vertical and horizontal scroll bars. Manipulation of the scroll bars causes command language on the server to fetch and send to the client *only those records* that fit, thus avoiding the problem of sending whole CEDR files to the client.

4. Complete installation of the remaining Epi Guides.

5. Aesthetics. The on-screen presentation of both CEDR structured documentation and epidemiology guides can be improved.

6. Include HTML links in CEDR metadata to other metadata (Epiguide goal records 'data element' element now linked to the 'Epi data element' database).

7. Complete loading of all CEDR structured documentation.

8. Webware I (web-based groupware- email in, http in, email out, http out).

9. Webware III (web-based listserv archive)

10. Webware V (instructional modules)

9. Summary of Deliverables

Online Deliverables:

1. Epi Guides: http://www.slac.stanford.edu/~lbl5spi/formepi.html

2. CEDR Metadata: http://www.slac.stanford.edu/~lbl5spi/formcedr.html

Paper Deliverables:

1. LBNL-39163 Investigation of Network-Based Information System Model, Konrad, Perez, Rodriguez, Rivera, Durst, Merrill, Holmes. September, 1996 (this report).

Appendix A

DBMS System Evaluation Criteria

Our first four general requirements are:

a) Organized Repository of Goal Records
b) Generation and maintenance of Index Records derived from Goal Records
c) Query of Index Records
d) Presentation of Goal Records both by search result or directly (Report Generator)

Additionally, the following requirements relate to bibliographic database applications:

a) Text/Character manipulation capabilities.
   1) Breaking string into words for passing to index on query string.
   2) Force to upper case for passing to index and on query string.
   3) Change a string to different string.
   4) Insert text in a string.
   5) Return size of data element value.
   6) Squeeze leading and trailing blanks.
b) Concurrent update control.
c) Optionally-occurring elements
   1)The data elements(variables) use storage or cells having no value?
d) Dates.
   1)What's the DATE FORMAT?
   2)Is it possible to change the DATE in one format to different output format?
e) Pre-defined procedures
   1)What Pre-defined procedures process values as input to DB?
   2)What Pre-defined procedures process output or displayed values from DB?
   3)What Pre-defined procedures process index values?
   4)What Pre-defined procedures process search values?
f) Personal name processing.
   1)How does DB store personal names?
   2)How does DB retrieve personal names?
   3)How does DB process and present personal names sub-components?
g) Variable length elements.
   1)Can all data elements in a DB be variable length?
   2)How is storage of variable length values supported?
h) Data repository.
   1)Is the data stored in the DB or externally?
I) Search engine.
   1)Complexity of query language.
j) Report Generator
k) Web/http (CGI) interface.
   1)Description of DBMS for interoperability with CGI scripts.

Appendix B

Evaluation of products and systems

Microsoft Access

Name of the manufacturer: Microsoft Corporation
Name of the vendor: Microsoft Corporation
Cost: $399.00
Type: Relational Database

Summary: Microsoft Access 2.0 is a good DBMS for Windows, Windows 95 and Windows NT. There is Web access for Windows NT server. No Web access was found for Windows or Windows 95. Examples of features were provided but no implementation details were available.

Topic Internet Server

Name of the manufacturer: Verity Inc.
Name of the vendor: Verity Inc.
Cost:
Type: Search Engine

Summary: Topic Internet Server is a product of topic SEARCH which is part of Verity's topic family of products. No detailed paper documentation was provided and there was no answer to telephone calls and mail messages.

Postgres 95

Name of the manufacturer: Andrew and Jolly Chen
Name of the vendor: University of California
Cost: Free
Type: Relational Database

Summary: Terminated evaluation at criterion number 5 (Optionally-occurring elements) on lack of merits:

1) Absence of product support
2) Absence of text capability

Resources do not permit further review.

WAIS

Name of the manufacturer: Thinking Machines, Inc.
Name of the vendor: CNIDR
Cost: Free
Type: Information retrieval system

Summary: Free WAIS is an Information retrieval system that implements free text search using a client/server architecture. Since free WAIS is not a DBMS there is no further consideration of this product.

Basis plus

Name of the manufacturer: Information Dimension Inc.
Name of the vendor: Information Dimension Inc.
Cost:
Type: Text DBMS

Summary: BASIS plus is a great text DBMS with almost all the characteristics CEDR is looking for. The only characteristic it don't has is the personal name processing. There was no answer to the telephone call to check on the cost of the product. Further consideration of the of this product is justify. No paper documentation was provided.

System II

Name of the manufacturer: Sybase Inc.
Name of the vendor: Sybase Inc.
Cost:
Type: RDBMS

Summary: System II is a family of Database products that runs on a variety of platforms from PCs to multi-cpu super servers. Including UNIX and SunOS. Some information was received by fax, however no detailed documentation about the DB was available.

SMART

Name of the manufacturer: Gerard Salton
Name of the vendor: Cornell University
Cost: Free
Type: Not a DB, Search Engine

Summary: There is not enough documentation available, because it is necessary to install the system to get reasonable documentation. The system is only a search engine.

MG Information Retrieval System

Name of the manufacturer: I.H. Witten, A. Moffat & T.C. Bell
Name of the vendor:
Cost: Free
Type: Not a DB, Information retrieval system

Summary: The information available is only to get the free software. To obtain documentation it is necessary to install the system or buy their new book. It is a research prototype, not a production-caliber product. Evaluation was terminated.

FFW-Free text search for WWW

Name of the manufacturer: Multitorg project
Name of the vendor: Telenor R & D, Norway
Cost: free for non-commercial use
Type: Not a DB, is a Search Engine

Summary: The system it's only a search engine. It is a package made to provide easy-to-use searching facilities over HTML documents. Evaluation terminated.

RDB

Name of the manufacturer: Walter V. Hobbs
Name of the vendor: RAND
Cost: Free
Type: Compliant with the relational model

Summary: Text/character manipulation capabilities are not supported by RDB. PERL could be used or UNIX utilities. This is a very simple relational DBMS. I think that using this DBMS with a good search engine would be a great help. [J. Rivera]

lq-text

Name of the manufacturer: Liam R. E. Quin
Name of the vendor: University of California at Berkeley
Cost: Free
Type: Not a DB. Is a search engine.

Summary: lq-text is a text retrieval engine. The system is not what we need. Does not comprise an organized repository (DBMS requirement).

qt (Query Text)

Name of the manufacturer: John Conover
Name of the vendor: (organization) Vixie Enterprises
Cost: Free
Type: Not a DBMS; search engine only.

Summary: The documentation sent by Mr. Conover was very good. The system is a text information retrieval system. It creates, maintains and queries a full DB. Evaluation terminated. I believe this search engine together with RDB will be a good help. [J. Rivera]

ORACLE

Name of the manufacturer: Oracle Corp.
Name of the vendor: Richard Franceschini
Cost:
Type: Relational DB

Summary: Oracle does not support bibliography data nor text retrieval capability well within the DBMS. Oracle has a software called Context that does not require the Oracle server in the current version. The next version of Context will require the proprietary server. Context is stand-alone software that needs a program (C language) to send the information. Context has many features. Context is a natural language processing technology that identifies themes and content in English text. Evaluation terminated, because original programming effort is beyond our scope and due to procurement cost.

ESQL

Name of the manufacturer: Seekersoft
Name of the vendor: Seekersoft
Cost:
Type: WWW (CGI) interface to DBMS from HTML documents.

Summary: ESQL is a interface between HTML and a DBMS that uses SQL. The SQL statement can be used inside the HTML code.

Glimpse 3.0

Name of the manufacturer: Udi Manber and Burra Gopal
Name of the vendor: University of Arizona and National Chung- Cheng University
Cost:
Type: Global Implicit Search (Search engine)

Summary: Glimpse is an indexing and query system that allows you to search through all your files very quickly. Glimpse supports most agrep's options including approximate matching, Boolean queries, and even some limited forms of regular expressions. Does not offer an organized data repository.

AIRS II

Name of the manufacturer: Arachnae Management Limited
Name of the vendor: Arachnae Management Limited
Cost: Server $5000, each concurrent user/client $100
Type: Full-text DB server

Summary: At the present, there is not enough information on this product, but it should be considered in the future for its important features that meet with some of our demands. Although the people in charge of this product were contacted by email and phone, we were not able to receive enough information as to clear up our difficulties found in the criteria evaluation.

Fulcrum Search Server

Name of the manufacturer: Fulcrum Technologies Inc.
Name of the vendor: Fulcrum Technologies Inc.
Cost:
Type: Search Engine

Summary: Fulcrum Search Server-a high performance, multiplatform, indexing and retrieval server engine. It is your key to retrieving and publishing information across the enterprise information critical for effective decision-making. Does not support data repository.

MORE- Multimedia Oriented Repository Environment

Name of the manufacturer: David Eichman, Terry Mc Gregor and Dann Danley
Name of the vendor: University of Houston
Cost: Free
Type: Metadata-based repository system

Summary: Terminated evaluation on lack of merits:
1) Absence of support
2) Absence of specific information
3) MORE is a metadata base repository- the information in its underlying DBMS isn't the objects themselves, but rather information concerning the object, which is stored using other mechanisms.

Spires

Name of the manufacturer: Stanford University
Name of the vendor: Stanford University/SLAC
Cost: Pending
Type: full bibliographic DBMS with network access

Summary: Candidate for further consideration.

BRS/SEARCH/Netanswer

Name of the manufacturer: Dataware Technologies
Name of the vendor: Dataware Technologies
Cost: $15,000
Type: full bibliographic DBMS with network access

Summary: Candidate for further consideration.

ISITE/ISEARCH

Name of the manufacturer: Center for Networked Information Discovery and Retrieval (CNIDR)
Name of the vendor: Same
Cost: freeware
Type: still in beta

Appendix C

Table of Products Evaluated
(interim)

Data Base	Evaluator	Evaluation Group
FFW	Jose	a- Search Engine only
Glimpse 3.0	Madel	a- Search Engine only
lq-text	Jose	a- Search Engine only
MG	Jose	a- Search Engine only
qt (Query Text)	Jose	a- Search Engine only
SMART	Jose	a- Search Engine only
Topic Internet Server	Yamilet	a- Search Engine only
WAIS	Yamilet	a- Search Engine only
ORACLE	Jose	b- Doesn't support text Processing
ORACLE with CONTEXT	Jose	c- Resource Intensive
MORE	Madel	d- Non Responsive
Postgres 95	Yamilet	d- Non Responsive
System II	Yamilet	d- Non Responsive
ESQL	Jose	e- RDB Support Tools
AIRS II	Madel	f- Good Candidate
Basis Plus	Yamilet	f- Good Candidate
BRS/Search	Madel	f- Good Candidate
Fulcrum Search Server	Madel	f- Good Candidate
Microsoft Access	Yamilet	f- Good Candidate
Spires	Madel	f- Good Candidate (Selection)
RDB	Jose	g- RDB without indexing capabilities

Appendix D

Selected Screens from WWW Access to CEDR Structured Documentation

CEDR - Comprehensive Epidemiologic Data Resource

Information Retieval

DFS Database:

- Browse Data File Set Structured Documentation
- Search Data File Set Structured Documentation

File Database:

- Browse File Structured Documentation
- Search File Structured Documentation

Var Database:

- **Browse Variable Structured Documentation** To browse structured documentation for variables, browse via Data File Set for File level structured documentation.
- Search Variable Structured Documentation

Code Database:

- Browse Code Set Structured Documentation
- Search Code Set Structured Documentation

ICD Summary Database (Death Tables):

- Browse ICD Summaries
- Search ICD Summaries

This CEDR information retrieval facility developed by Madel Perez, Jose Rivera and Yamilet Rodriguez.

We welcome your comments and questions concerning the CEDR project, our information retrieval products and Customer Service. If you would like further information about CEDR, please contact us at:


```
Allan M. Konrad
email:  konrad@sims.berkeley.edu
phone:  (510) 486-5458
mail:   Mailstop 50B-3238
        Lawrence Berkeley National Laboratory
        Berkeley, CA  94704
```

CEDR DFS Database Search Form

Fill in the entries you know, leave the others blank.

Dataset:	
Name:	
AltName:	
Description:	
Races:	
Sexes:	
Diseases:	
Exposure-Agent:	
Sites:	
Contact-Name:	
Subject:	
Added-Keywords:	
CEDRQAQC:	

Submit Query Clear Fileds

CEDR File Database Browse Form

FRC94A02_DLC4014Fernald demographics and work history
FRC94A02_NLOEXTLExternal dosimetry analysis file
FRC94A02_NLOINTLFernald internal doses
HFC78A01_CEDR78_1HF CEDR78 F#1: Vital Stat. & Int. Depos.
HFC78A01_CEDR78_2Hanford CEDR78 File 2: External Dosim.
HFC78A01_CEDR78_3Hanford CEDR78 File 3: Additional Vars
HFI89A01_IARC89_1HF IARC89 F# 1: Vit. Stat. & Int. Depos.
HFI89A01_IARC89_2Hanford IARC89 F# 2: External Dosimetry
HFI89A01_IARC89_3Hanford IARC89 File 3: Additional Vars
HFMCCA02_MALCCA_1
HFMCCA02_MALCCA_2
HFMCCA02_MALCCA_3
HFMCCA02_MALCCA_4
HFMCCA02_MALCCA_5
HFMPVA02_MALPVA1
HFMPVA02_MALPVA2
HFMPVA02_MALPVA3
HFMPVA02_MALPVA4
HFMPVA02_MALPVA5
HFSRCW01_INDEPHanford internal deposition
HFSRCW01_OHH88_COHanford job histories - construction
HFSRCW01_OHH88_OPHanford job histories - non-construction
HFSRCW01_ORE_44Hanford external dosimetry 1944-1982
HFSRCW01_ORE_83Hanford external dosimetry 1983-1989
HFW89W01_ADD89_1
HFW89W01_ADD89_2
HFW89W01_ADD89_3
HFW89W01_DOS89Hanford DOS89: External Dosimetry
HFW89W01_INT89Hanford INT89: Internal Deposition
HFW89W01_JOB89Hanford JOB89: Job Histories
LAFEMA01_LAFEFILELANL females 1987 analytic file
LAMENA03_LAMEFILELANL males 1993 analytic file
LASUIA02_LASUFILELANL females suicide analytic file
LAUPUA01_UPPU8926 Plutonium-Exposed LANL Workers--42-yr
MCD94A01_ELL2542Analysis file for mcd94a01
MDEXTA02_ANFILEMound JOM91 Paper Analytic File
MFD94A01_CASE45Cumulative (case?) internal dose info.
MFD94A01_CHRONSMKSmoking hist. codes and dates (CHRONSMK)
MFD94A01_CONT45Cum. (control?) int. dose info. (CONT45)
MFD94A01_DAYSEXTAverage daily ext exp, days wkd (DAYSEXT
MFD94A01_DAYSINTAverage daily int exp, days wkd (DAYSINT
MFD94A01_DEMGREMPDemog, work, med, and smoking (DEMGREMP)
MFD94A01_EXPCODEThorium, radium, and radon expos(EXPCODE
MFD94A01_MEDRECDetailed medical data (MEDREC)
MFD94A01_NEWEXTFlm badge, doses, and lag cutoff(NEWEXT)
MFD94A01_NEWINTCalc'd lung doses and lag cuts (NEWINT)
MFD94A01_PAYCODESPay code and job title data (PAYCODES)
MFD94A01_SMK1580Smoking codes and dates by fac (SMK1580)
MFF94A02_ELL31455 rem case file used in mortality analys
MFI93A01_HFIARC_1Identification and internal exposure inf
MFI93A01_HFIARC_2External doses information
MFI93A01_HFIARC_3Workers with internal exposure
MFI93A01_HFIARC_4Additional variables
MFI93A01_ORIARC_1ORNL IARC general

MFI93A01_ORIARC_2underlying & associated causes of death
MFI93A01_ORIARC_3External doses information
MFI93A01_ORIARC_4Deposition of radionuclides
MFI93A01_ORIARC_5internal exposure-special list
MFI93A01_RFIARC_1Unique Registration & personal info.
MFI93A01_RFIARC_2underlying & associated causes of death
MFI93A01_RFIARC_3External doses information
MFI93A01_RFIARC_4Deposition of radionuclides
MFI93A01_RFIARC_5offsite/transfer doses
ORISEWDS_DEATHDeath file
ORISEWDS_DEPTCDDepartment code file
ORISEWDS_EMPEmployment data
ORISEWDS_ERRORFile containing known/detected errors
ORISEWDS_FIXEDFile containing fixed errors
ORISEWDS_FMPCFBFernald film badge monitoring data
ORISEWDS_FMPCURINFernald urinalysis monitoring data
ORISEWDS_FMPCWBCFernald whole body count data
ORISEWDS_JOBJob code and job title file
ORISEWDS_LINDEFBLinde FB (external) monitoring data
ORISEWDS_MERGEDMerged file
ORISEWDS_MRMaster roster file
ORISEWDS_MVITALMaster vital status file
ORISEWDS_PAYCDPaycode file
ORK25A02_ANALUPD1K-25 cohort analysis file
ORMULA04_COHORTAnalysis file for ORMULA04 study (COHORT
ORMULA05_DEMGRDemographic file for ormula05
ORMULA05_K25EXPK-25 exposure file for ormula05
ORMULA05_X10ADJX-10 adjusted exposure file for ormula05
ORMULA05_X10EXPX-10 exposure file for ormula05
ORMULA05_Y12ADJY-12 adjusted exposure file for ormula05
ORMULA05_Y12EXPY-12 exposure file for ormula05
PXFACW01_ACTIVEPantex Active Employee Exposure File
PXFACW01_INACTIVEPantex Inactive Employee Exposure File
PXFACW01_PERSONPantex Working Personnel File
PXFACW01_PXEXPPantex 1-rem Exposure Record File
PXFACW01_TERMEDPantex Terminated Employee Exposure File
RFANLA02_RFANALYTRocky Flats demographic & exposure data
RFANLA02_RFINTEXPRocky Flats internal exposure data
SRC94A02_DLC9860Savannah River analysis file
SRC94A02_SRSEXPOSDosimetry analysis file
USTURW01_ADMINadmin
USTURW01_RADCHEM

CEDR File Database Search Form

Fill in the entries you know, leave the others blank.

FILE:	
Dataset:	
File-Name:	
Description:	
Analysis-Unit:	
Subject:	
Added-Keywords:	

Submit Query Clear Fileds

Appendix E

Selected Screens from WWW Access to Epidemiology Guides (site archive records)

Epidemilogic Guides

Prepared for the U.S. Department of Energy
Office of Epdemiology and Health Surveillance
By
History Associates Incorporated
Rockville, Maryland

Browsing Epidemilogic Guides

- Hanford Site: A Guide to Record Series Supporting Epidemiologic Studies Coducted for the Department of Energy.
- Los Alamos National Laboratory: A Guide to Records Series Supporting Epidemiologic Studies Condunted for the Department of Energy. [Available Online Soon]
- Oak Ridge Y-12 Plant: A Guide to Records Series Supporting Epidemiologic Studies Conducted for the Department of Energy.
- Oak Ridge K-25 Plant: Records Relating to Cesium at the K-25 Plant: A Guide to Record Series of the Department of Energy and Its Contractors.[Available Online Soon]
- Oak Ridge National Lab and Oak Ridge Operations Office: Records Relating to RaLa, Iodine-131, and Cesium-137 at the ORNL and the Oak Ridge Operations Office
- Oak Ridge Institute for for Science and Education: A Guide to Record Series Supporting Epidemiologic Studies Conducted for the Department of Energy. [Available Online Soon]
- Rocky Flats Fire September 1957: A Guide to Record Series of the Department of Energy and its Contractors.
- Rocky Flats Plant: A Guide to Record Series Useful for Health-Related Research (7 volumes). [Available Online Soon]

Searching in Epidemiolgic Guides

Search Epiguides

Searching Epi Data Element Database:

Search Epide

Record Series for entire DOE sites

Record Series for DOE sites (not confined to epidemiology)

This CEDR information retrieval facility developed by Madel Perez, Jose Rivera and Yamilet Rodriguez.

We welcome your comments and questions concerning the CEDR project, our information retrieval products and Customer Service. If you would like further information about CEDR, please contact us at:


```
Allan M. Konrad
email:  konrad@sims.berkeley.edu
phone:  (510) 486-5458
mail:   Mailstop 50B-3238
        Lawrence Berkeley National Laboratory
        Berkeley, CA  94720
```


Updated 05 September 1996.

CEDR Epidguides Database Search Form

Fill in the entries you know, leave the others blank.

Control:	
TocSubElem:	
Introduction:	
Series-Type:	
Location:	
OtherID:	
Originating:	
Program:	
Finding-AIDS:	
Bibliography:	
Disposition:	
Series-Desc:	
Data-Element:	
Computing-Env:	
Directory:	
File-Name:	
File-Type:	

Submit Query Clear Fileds

HANFORD SITE: A GUIDE TO RECORD SERIES
SUPPORTING EPIDEMIOLOGIC STUDIES
CONDUCTED FOR THE DEPARTMENT OF ENERGY
INTRODUCTION
Overview
The Epidemiologic Records Inventory Project
Role of HAI
BACKGROUND
History of the DOE
more
more
Site History
Organization
Pacific Northwest Laboratory (PNL)
Hanford Environmental Health Foundation (HEHF)
Occupational Epidemiologic Studies
Breast Cancer Incidence Study
Epidemiologic Surveillance System (ESS)
DOE Health and Mortality Studies
AEC Feasibility Study
AEC Pilot Study
AEC Health and Mortality Study
more
Lung Cancer, Ionizing Radiation, and Tobacco Smoking Among Males at Hanford Case-Cohc
Goodtime, Trauma, and Timeout Studies
ACCESS
Overview
Records Locations
Records Retention and Disposition Schedules
RIDS Database
RHA-MIS Database
NARA Standard Form 135s
METHODOLOGY
Data Elements
SCOPE
more
Administrative Contacts
U.S. Department of Energy
U.S. Department of Energy
Seattle Federal Records Center
National Archives and Records Administration - Pacific Northwest
National Archives and Records Administration
ARRANGEMENT
I. Administrative and General
II. Database Management
III. Data Collection
IV. Data Analysis
V. Electronic Record Series
more
DATA ITEMS IN RECORD SERIES DESCRIPTIONS
Record Series Descriptions
Access Restrictions
more
Accession/Other Identification Number
more
Arrangement
Condition
Container Number
Data Elements
Disposition Authority

Duplication
Finding Aids
Location
Medium
Originating Office
Scanning Suitability
Series Description
Title and Inclusive Dates
Volume

Electronic Record Series Descriptions

Access Restrictions
Data Elements
Directory Name
Disposition Authority
File Description
File Name
File Type
Hardware/Software
Location
Office/Program Supported
Originating Office
Atomic Energy Commission (AEC) Feasibility Study Preliminary Report, ca. 1965
Atomic Energy Commission (AEC) Health and Mortality Study (HMS) Progress Reports, 196
Atomic Energy Commission (AEC) Health and Mortality Study (HMS) Report,1969
Epidemiologic Study Publications, 1976-1979, 1985, 1987 1990, 1992
Hanford Environmental Health Foundation (HEHF) Annual Reports, 1968-1971
Hanford Environmental Health Foundation (HEHF) Monthly Reports, 1974-1989
Hanford Exposure Project (HEX) Log, 1967-1968
Hanford Exposure Project (HEX) Records, ca. 1940-1974
Hanford Health and Mortality Study (HMS) Administrative Files, 1964-1989
Hanford Health and Mortality Study (HMS) Advisory Committee Meeting Records, 1982-198
Industrial Medical Services Section Procedures, 1945 1946, 1955-1958
Inspector General Investigation Records, 1977
Joint Epidemiology Group Meeting Minutes, 1984-1990
Mancuso Correspondence and Study Records, 1965-1978
Occupational Program Records, 1991
Pacific Northwest Laboratory (PNL) General Records, 1979-1992
Pacific Northwest Laboratory (PNL) Monthly Reports, 1987-1994
Skin Cancer Project Study Records, 1987
Timeout Study Records, 1986-1989
Trauma Study Planning Records, 1989
Analysis (ANAL.89) File Edit Records, 1991
Center for Epidemiologic Research (CER) Database Correlation Records, 1993
Comprehensive Epidemiologic Data Resource (CEDR) Database Correlation Records, 1993
Goodtime Study Database Code Records, 1989
Hanford Health and Mortality Study (HMS) Database Documentation Records, ca. 1989-199
Hanford Mortality (HMO) File Documentation Records, 1979, 1984- 1994
Health Surveillance System (HSS) Development Records, 1986-1988
Health Surveillance System (HSS) Edit Records, 1985-1991
Health Surveillance System (HSS) Query Records, 1990-1992
International Agency for Research on Cancer (IARC) Database Correlation Records, 1991
Key File Edit Records, 1992
Master (MST1) File Edit Records, 1987-1994
Monson Fortran Program Code Records, 1991
Mortality and Occupational Exposure (MOX) File Documentation Records, 1987
Mortality and Occupational Exposure (MOX) File Edit Records, 1987- 1988
Mortality Study Database (MORT) Modification Records, 1991-1993
Occupational Radiation Exposure (ORE) File Resolution Records, 1983-1989, 1991
Social Security Number Verification Records, 1989-1990, 1992
Software Development Project Materials, 1989-1990
Timeout Study Database Records, 1987-1989

Benton and Franklin Counties Monthly Mortality Reports, 1988-1993
Benton County Voter Report, 1981
Blood Type Record Cards, 1964
Breast Cancer Study Internal Exposure Records, 1988-1991
Breast Cancer Study Medical Records, 1984-1989
Building Lists, 1967
Construction Employees' Roster, 1985-1987
Contractor Employee Roster Records, 1950-1953
Cooperative Program Personnel Questionnaires, 1992
Cumulative Radiation Exposure Records, 1969
Death Certificate Records, 1944-1994
External Exposure Data Records, 1983-1989
External Exposure Records, 1969, 1973-1975, 1978, 1982
Goodtime Study Alcohol, Tobacco, and Exercise Data Abstract Forms, 1984-1992 LOCI=RHA
Hanford Area Autopsy Records, undated
Hanford Atomic Power Operations (HAPO) Personnel Data, 1964 LOCI=RHA, 712 Building, F
Hanford Employee Cancer Malignancy Mortality Records, undated
Hanford Environmental Health Foundation (HEHF) Death Certificate Retrieval Records, 1
Health Medical Examination (HME) Report Records, 1944-1976
Health Surveillance System (HSS) Health Event Audit Records, 1984-1993
Health Surveillance System (HSS) Health Event Monthly Reports, 1984-1990
Health Surveillance System (HSS) Health Event Records, 1987-1993
Injury and Accident Reports, 1953-1960
Internal Exposure Records, 1974-1976
Job Code Records, 1983, 1985
Lung Cancer Study Records, 1983-1994
Master File Records, 1988
Medical Chart Logs, 1966-1967
Mortality Data Validation Report, 1993
Mortality Record Cards, 1981
Mortality Study Database (MORT) Reports, 1981, 1986-1987, 1992- 1993
Occupational Health History Master File Data Records, 1971, 1976, 1978-1986, 1988
Occupational Health History Master Files, ca. 1944-1979
Occupational Health Treatment Records, 1978, 1981-1988
Operations and Construction Workers Roster Records, undated
Organizational Charts and Directories, 1944-1986
Organizational Code Directory, 1969
Payroll Records, 1963-1965, 1972, 1974
Plutonium Internal Deposition Study Records, 1945, 1955-1973, 1981, 1983
Public Health and Social Services Records, 1963
Social Security Administration (SSA) Employee Data Records, 1967-1972
Timeout Study Alcohol, Tobacco, and Exercise Data Abstract Forms, ca. 1989
Trauma Study Alcohol, Tobacco, and Exercise Data Abstract Forms, 1989
Tumor Registry Project Records, 1987
United States Death Rate Records, 1985, 1988
X-ray Exposure Study Records, 1968, 1982
Health Surveillance System (HSS) Basic Analysis Reports, 1985-1991
Health Surveillance System (HSS) Hanford Roster Analysis, 1987-1992
Leukemia Data Correlation Records, 1992
Medical Department Monthly Reports, 1948-1953
Mortality and Occupational Exposure (MOX) and Monson Reports, 1988-1991, 1993
Plutonium Finishing Workers Profile Records, 1991
Radiation Exposure Data Records, 1990
Master Files
Master Files
Master Files
Master Files
Master Files
Master Files
Master Files
Master Files

Personal Information Files
Personal Information Files
Personal Information Files
Personal Information Files
Personal Information Files
Personal Information Files
Personal Information Files
Personal Information Files
Work History Files
Work History Files
Occupational Radiation Exposure Files
Occupational Radiation Exposure Files
Occupational Radiation Exposure Files
Occupational Radiation Exposure Files
Occupational Radiation Exposure Files
Occupational Radiation Exposure Files
Vital Status Files
Vital Status Files

Ernest Orlando Lawrence Berkeley National Laboratory
One Cyclotron Road | Berkeley, California 94720

Prepared for the U.S. Department of Energy under Contract No. DE-AC03-76SF00098